Registered No. C207

No. 13 of 1937

WEST BENGAL GOVT. PRESS LIBRARY

The Calcutta Gazette

Published by Authority

THURSDAY, APRIL 1, 1937.

CONTENTS:

	Page.
PART I.—Orders and Notifications by the Governor of Bengal, the Government of Bengal, the High Court, Government Treasury, etc.	723—787
PART IA.—Orders and Notifications by the Government of India republished for general information	199—218
PART IB.—Educational Notices ..	4[illegible]—407
PART II.—Advertisements ..	3[illegible]—354
PART III.—Acts of the Bengal Legislative Council	Nil
PART IV.—Bills introduced in the Bengal Legislative Council, Reports of Select Committees presented or to be presented to that Council and Bills published before introduction in that Council ..	Nil
PART V.—Acts of the Indian Legislature assented to by the Governor-General and Ordinances promulgated under section 72 of the Government of India Act ..	Nil
PART VI.—Bills introduced in the Council of State and Legislative Assembly, Reports of Select Committees presented to the Council and Assembly and Bills published under rule 18 of the Indian Legislative Rules—	
The Indian Limitation (Amendment) Bill, 1937, with Statement of Objects and Reasons	81—82
The Indian Army (Amendment) Bill, 1937, with Statement of Objects and Reasons	83
SUPPLEMENT No. 13 :—	
Resolution on the Report on the administration of the Wards, Attached and Trust Estates in the Presidency of Bengal for the year 1342 B.S. (1935-36)	349—350
Forecast of the *Rabi* Crops of Bengal for 1936-37	351—362
Corporation of Calcutta Notices—Weekly Weather and Crop Report—Prices-current—Errata to Daily Rainfall—Cotton Ginning and Pressing—Weekly Gauge Readings	363—375

PART I

Orders and Notifications by the Governor of Bengal, the Government of Bengal, the High Court, Government Treasury, etc.

Orders by the Government of Bengal.

No. 3348A.

Appointments and Transfers.

GENERAL.

Dacca.—No. 3126A.—19th March 1937.—Mr. S. N. Mitra, I.C.S., Joint Magistrate and Deputy Collector, on leave, is posted to the headquarters station of the Dacca district.

Tippera-Presidency Divn.—No. 3207A.—20th March 1937.—Babu Dhirendra Kumar Ghosh, Deputy Magistrate and Deputy Collector, Brahmanbaria, Tippera, is appointed to be Personal Assistant to the Commissioner of the Presidency Division.

Tippera.—No. 3211A.—20th March 1937.—Maulvi Azizur Rahman, Deputy Magistrate and Deputy Collector, Brahmanbaria, Tippera, is appointed temporarily to have charge of that subdivision.

Chittagong Divn. — No. 3214A. — 20th March 1937.—Maulvi Akbar Husain Ahmad, Sub-Deputy Collector, on leave, is posted to the Chittagong Division.

POLICE.

Dacca.—No. 3252A.—22nd March 1937.—In modification of the orders of the 12th March 1937, the services of Lieutenant-Colonel E. D. Dallas-Smith, I.A., Commandant, Eastern Frontier Rifles (Bengal Battalion), Dacca, are replaced at the disposal of the Government of India, with effect from the 21st April 1937.

Chittagong-Noakhali.—No. 3285A.—24th March 1937.—Mr. S. A. H. M. Ismail, I.P., officiating Additional Superintendent of Police, Chittagong, is appointed to act, until further orders, as Superintendent of Police, Noakhali.

Calcutta-Chittagong.—No. 3288A.—24th March 1937.—Mr. P. L. Mehta, I.P., officiating Deputy Commissioner of Police, Calcutta, is appointed to act, until further orders, as Additional Superintendent of Police, Chittagong.

ECCLESIASTICAL.

Calcutta-24-Parganas.—No. 3255A.—22nd March 1937.—The Reverend Douglas Arlington Simons, Pastor-in-charge, Assemblies of God Mission, Calcutta, is authorised, under section 6 of Act XV of 1872, to solemnise marriages between persons one or both of whom is or are a Christian or Christians and, under section 9 of the Act, to grant certificates of marriage between persons who are native Christians.

2. He is also appointed under Act VI of 1886 to be a Registrar of Births and Deaths for the 24-Parganas district.

Leave.

GENERAL.

Faridpur.—No. 3123A.—19th March 1937.—Mr. R. A. Dutch, I.C.S., officiating Additional District and Sessions Judge, Faridpur, is allowed leave on average pay for one day viz., the 25th March 1937, under rule 81(*b*) (*i*) of the Fundamental Rules.

Calcutta.—No. 3218A.—20th March 1937.—The Hon'ble S. K. Sinha, I.C.S., Chief Presidency Magistrate, Calcutta, is allowed leave on average pay for five months and sixteen days, under rule 81(*b*) (*i*) of the Fundamental Rules, with effect from the 1st April 1937, and in continuation leave on half average pay for one year and ten days, under rule 81(*d*) of those Rules.

No. 3243A.—22nd March 1937.—Mr. A. N. Sen, District and Sessions Judge, is allowed leave on average pay, under rule 81(*b*) (*ii*) of the Fundamental Rules, up to the 15th May 1937, in extension of the leave granted to him under the orders of the 26th February 1937.

Birbhum.—No. 3261A.—23rd March 1937.—Babu Prakash Chandra Datta, Sub-Deputy Collector, Rampurhat, Birbhum, is allowed leave on average pay up to the 30th June 1937, under rule 81 (*b*) (*ii*) of the Fundamental Rules, with effect from the 15th April 1937

Calcutta.—No. 3270A.—23rd March 1937.—The Hon'ble Sir John Ackroyd Woodhead, K.C.I.E., C.I.E., I.C.S., is allowed leave for twenty-eight months, viz., leave on average pay for eight months, under rule 81 (*b*) (*i*) of the Fundamental Rules, with effect from the 1st April 1937, and in continuation leave on half average pay for the remaining period, under rule 81 (*d*) of those Rules, read with rule 97 (*1*) of the Fundamental Rules.

POLICE.

No. 3239A.—22nd March 1937.—Lieutenant H. C. McGildowny, an Aide-de-Camp on the personal staff of His Excellency the Governor of Bengal, is allowed leave for four months viz., leave on average pay for two months and five days, under rule 100(*a*) (*i*) of the Fundamental Rules, with effect from the 1st April 1937, or any subsequent date on which he may avail himself of it, and furlough under Military Rules for the remaining period.

H. J. TWYNAM,

Chief Secy. to the Govt. of Bengal (offg.).

Reforms.

NOTIFICATION.

No. 8279A.R.—27th March 1937.—The following is published for general information.

By order of the Governor in Council,

R. N. GILCHRIST,

Reforms Commr. and Joint Secy. (Ex-officio) to the Govt. of Bengal.

Bengal Legislative Assembly Bye-election.

Bengal Chamber of Commerce Constituency.

Under the provisions of rule 8 (*2*) of the Bengal Legislative Assembly Electoral (Conduct of Elections) Rules, 1936, I declare that Mr. Michael Arthur Frederic Hirtzel of 2, Fairlie Place, Calcutta, has been duly elected to fill the seat at the bye-election to the Bengal Chamber of Commerce Constituency of the Bengal Legislative Assembly.

A. J. DASH, *Returning Officer*
(Commissioner, Presidency Division.)

Calcutta, the 25th March 1937.

POLITICAL DEPARTMENT.

Political.

NOTIFICATIONS.

No. 3894P.—23rd March 1937.—The Governor in Council is pleased to accept the resignation tendered by Mr. A. B. Mallett of his appointment as a member of the Bengal Board of Censors, with effect from the 5th March 1937.

No. 3897P.—23rd March 1937.—In exercise of the powers conferred by section 7, sub-section (*1*) of the Cinematograph Act (II of 1918), the Governor in Council is pleased to appoint Mr. S. C. Lyttelton to be a member of the Bengal Board of Censors constituted by notification No. 13495P., dated the 22nd August 1936, published in the *Calcutta Gazette* of the 27th August 1936, *vice* Mr. A. B. Mallett, resigned. He will hold office from the date of the notification.

H. J. TWYNAM,
Chief Secy. to the Govt. of Bengal (offg.).

POLICE DEPARTMENT.

NOTIFICATION.

No. 1546Pl. — 25th March 1937. — In exercise of the power conferred by clause (*g*) of sub-section (*2*) of section 11 of the Indian Motor Vehicles Act, 1914 (VIII of 1914), and in partial modification of sub-rule (*1*) of rule 41 of the Calcutta and Howrah Motor Vehicles Rules, 1930, published under notification No 1398Pl., dated the 19th March 1930, the Governor in Council is pleased to make the following rule, namely:—

Rule.

No motor vehicle, if it is a light motor car or motor cycle or motor omnibus having all its wheels fitted with pneumatic tyres, shall be driven at a greater speed than 15 miles an hour, in the area falling within Gariahat Road, the Eastern Bengal Railway Diamond Harbour Branch Embankment, Russa Road and Rash Behari Avenue but excluding the roads which form the boundaries of the said area. The said area shall for the purpose of this rule be known as the Dhakuria Lake Area

Explanation.—The expressions "light motor car," "motor cycle," "motor omnibus" and "pneumatic tyre" used in this rule shall have the same meanings as in the Calcutta and Howrah Motor Vehicles Rules, 1930.

H. J. TWYNAM,
Chief Secy. to the Govt of Bengal (offg.).

Calcutta Police Notification.

No. 3189.—23rd March 1937.—In exercise of the power conferred by clauses (*b*) and (*c*) of sub-section (*1*) of section 39 of the Calcutta Suburban Police Act, 1866 (Bengal Act II of 1866), the Commissioner of Police, Calcutta, with the previous sanction of the Governor in Council, hereby makes the following additions to schedule B referred to in rule 22 under the sub-heading "(*b*) Moving and standing vehicles" in part I of the "Rules for the regulation of Traffic, etc., in the streets and public places of Calcutta and its suburbs," published under Calcutta Police Notification No. 134, dated the 6th January 1932, at pages 37-99, Part I of the *Calcutta Gazette* of the 14th January 1932:—

Additions.

Insert the following additions in schedule "B" at pages 52 to 58, inclusive, of the said rules:—

1. Debendra Ghose Road (from the junction of Harish Mukherjee Road to its junction with Ashutosh Mukherji Road)—Vehicles shall park in a single line parallel to kerb, on the north side of the street only. Vehicles to face east. Parking of vehicles shall be prohibited on the south side of the street.
2. Paddapukur Road (from the junction of Ashutosh Mukherji Road to its junction with Justice Dwarka Nath Road)—Vehicles shall park in a single line parallel to the kerb, on the north side of the street only. Vehicles shall be prohibited on the south side of the street.

3. Justice Dwarka Nath Road (from the junction of Paddapukur Road to its junction with Mohini Mohan Road) —Vehicles shall park in a single line, parallel to the kerb, on the east side of the street only; vehicles to face south. Parking of vehicles shall be prohibited on the west side of the street.

L. H. COLSON,

Commissioner of Police, Calcutta.

JUDICIAL DEPARTMENT.

No. 3349A.

Powers.

Dacca.—No. 3130A.—19th March 1937.—Mr. S. N. Mitra, I.C.S., who has been posted to the headquarters station of the Dacca district, is vested under sub-section (*1*) of section 7 of the Bengal, Agra and Assam Civil Courts Act, 1887 (XII of 1887), with the powers of a munsif in the district, to be ordinarily exercised in the local jurisdiction of the Sadar munsifi.

Murshidabad.—No. 3275A.—23rd March 1937.—Maulvi Muhammad Ibrahim Husain, Sub-Deputy Magistrate, Jangipur, Murshidabad, is vested with the powers of a Magistrate of the second class.

H. J. TWYNAM,

Chief Secy. to the Govt. of Bengal (offg.).

Appointments and Transfers.

Rangpur.—No. 2366J.—22nd March 1937.—Babu Wooshakur Basu Majumdar, probationary munsif, is appointed to be additional munsif (on training) at Gaibandha, in the district of Rangpur.

Dacca.—No. 2403J.—23rd March 1937.—In exercise of the powers conferred by sections 14 and 15 and the proviso to section 357 of the Code of Criminal Procedure, 1898 (Act V of 1898), the Governor in Council is pleased—

(*a*) to confer upon Khan Bahadur Abu Ahamed Abdul Basit the powers of a Magistrate of the first class, in the district of Dacca, for a period of three years from the date of this notification, in respect to such cases as may be made over to him within the limits of the Sadar subdivision of the said district,

(*b*) to direct that he shall, in addition to sitting singly, sit as a member of the Sadar bench in the said district, and

(*c*) to direct him to take down evidence in English language.

He is also vested with the power to try summarily the offences mentioned in section 260 of the Code of Criminal Procedure.

In exercise of the power conferred by sub-section (*1*) of section 565 of the Code of Criminal Procedure, 1898, the Governor in Council is pleased to empower Khan Bahadur Abu Ahamed Abdul Basit to order at the time of passing sentence of imprisonment on any person referred to in that sub-section that the residence or change of residence of such person after release shall be notified as provided by the rules made under sub-section (*3*) of the section.

Midnapore-Calcutta.—No. 2440J.—25th March 1937.—Mr. R. Gupta, I.C.S., Additional District Magistrate, Midnapore, is appointed to be the Chief Presidency Magistrate, Calcutta, from the 1st April 1937.

Howrah - Jessore - Bakarganj - Burdwan-Hooghly - 24-Parganas - Pabna - Mymensingh -, Murshidabad - Birbhum - Dacca-Chittagong - Tippera. — No. 2414J. — 23rd March 1937.—In exercise of the powers conferred upon the Local Government under section 14(*2*) of the Code of Criminal Procedure, each of the following probationary munsifs is appointed as a Special Magistrate for a period of two months, with effect from the 1st April 1937, in the district noted against his name and is vested with the powers of a Magistrate of the second class:—

Mr. Sashi Bhusan Mandal—Howrah.

Babu Santosh Kumar Chakrabatti—Howrah.

Babu Tara Pada Mukharji—Jessore.

Maulvi A. B. Md. Mazharul Huq—Bakarganj.

Babu Hemendra Nath Sen—Bakarganj.

Maulvi Jafar Ahmad—Bakarganj.

Babu Jyotsna Nath Mallik—Burdwan.

Maulvi Abdul Moudud—Burdwan.

Babu Kshetra Das Banarji—Hooghly.

Babu Nikhil Chandra Ganguli—Hooghly.

Babu Sailesh Chandra Sen Gupta—24-Parganas.

Babu Samarendra Nath Mukharji—24-Parganas.

Babu Arun Kumar Das—Pabna.

Babu Santosh Kumar Sen—Pabna.

Babu Santosh Kumar Ghosh—Mymensingh.

Maulvi Majibar Rahman Khan—Mymensingh.

Babu Anil Kumar Sen—Murshidabad.

Maulvi Aminul Islam—Birbhum.

Babu Krishna Kumar Mitra—Dacca

Babu Kshetra Mohan Das—Chittagong.

Babu Bibhutosh Banarji—Tippera.

Leave.

Noakhali.—No. 2399J.—23rd March 1937.—Babu Bagala Prasanna Basu, Subordinate Judge and Assistant Sessions Judge of Noakhali, is allowed leave on average pay for one month, with effect from the 30th March 1937, under rules 81 (*b*) (*ii*) and 82 (*b*) of the Fundamental Rules.

Noakhali.—No. 2405J.—23rd March 1937.—Babu Kshiradeswar Banarji, Additional Subordinate Judge and Assistant Sessions Judge of Noakhali, is allowed leave on average pay for the period from the 13th March to the 25th March 1937, under rules 81 (*b*) (*ii*) and 82(*b*) of the Fundamental Rules, in extension of the leave already granted to him.

Resignation.

Calcutta.—No. 2360J.—22nd March 1937.—The Governor in Council is pleased to accept the resignation tendered by Rai Sahib Makhan Lal Ghosh of his appointment as an Honorary Presidency Magistrate for the town of Calcutta.

Powers.

Bankura.—No. 2271J.—19th March 1937.—In exercise of the power conferred by section 14 of the Code of Criminal Procedure, 1898 (Act V of 1898), the Governor in Council is pleased to confer upon Babu Haridas Bhattacharji, an Honorary Magistrate of the Vishnupur bench, the powers of a Magistrate of the third class, in the district of Bankura, for the period during which he has been directed to sit as a member of the said bench, in respect to such cases as may be made over to him, when sitting singly, within the limits of the Bishnupur subdivision of the said district.

Murshidabad.—No. 2273J.—19th March 1937.—In exercise of the power conferred by section 14 of the Code of Criminal Procedure, 1898 (Act V of 1898), the Governor in Council is pleased to confer upon Babu Dhirendra Nath Ray, an Honorary Magistrate of the Jangipur bench, the powers of a Magistrate of the 3rd class, in the district of Murshidabad, for the period during which he has been directed to sit as a member of the said bench, in respect to such cases as may be made over to him, when sitting singly, within the limits of the Jangipur subdivision of the said district.

Darjeeling.—No. 2311J.—20th March 1937.—In exercise of the power conferred by section 14 of the Code of Criminal Procedure, 1898 (Act V of 1898), the Governor in Council is pleased to confer upon Babu Rama Sankar Prosad, an Honorary Magistrate of the Sadar bench, the powers of a Magistrate of the third class, in the district of Darjeeling, for the period during which he has been directed to sit as a member of the said bench, in respect to such cases as may be made over to him, when sitting singly, within the limits of the Sadar subdivision of the said district.

NOTIFICATIONS.

Mymensingh.—No. 2285J.—19th March 1937.—In exercise of the power conferred by section 65 of the Bengal Village Self-Government Act, 1919 (Bengal Act V of 1919), the Governor in Council is pleased to appoint Maulvi Rafetuddin Talukdar, a member of the Mesta union board within the Jamalpur police-station in the Jamalpur subdivision of the Mymensingh district, to be, during his term of office as such member, a member of the union bench within the jurisdiction of the said union board for the purposes of that section.

Mymensingh.—No. 2286J.—19th March 1937.—In exercise of the power conferred by section 73 of the Bengal Village Self-Government Act, 1919 (Bengal Act V of 1919), the Governor in Council is pleased to appoint Maulvi Rafetuddin Talukdar, a member of the Mesta union board within the Jamalpur police-station in the Jamalpur subdivision of the Mymensingh district, to be, during his term of office as such member, a member of the union court within the jurisdiction of the said union board for the purposes of that section.

Bogra.—No. 2341J.—22nd March 1937.—In exercise of the power conferred by section 65 of the Bengal Village Self-Government Act, 1919 (Bengal Act V of 1919), the Governor in Council is pleased to appoint Munshi Farazuddin Sardar, a member of the Rukindipur union board within the Adamdighi police-station in the Sadar subdivision of the Bogra district, to be, during his term of office as such member, a member of the union bench within the jurisdiction of the said union board for the purposes of that section.

Bogra.—No. 2342J.—22nd March 1937.—In exercise of the power conferred by section 73 of the Bengal Village Self-Government Act, 1919 (Bengal V of 1919), the Governor in Council is pleased to appoint Munshi Farazuddin Sardar, a member of the Rukindipur union board within the Adamdighi police-station in the Sadar subdivision of the Bogra district, to be, during his term of office as such member, a member of the union court within the jurisdiction of the said union board for the purposes of that section.

N. G. A. EDGLEY,

Secy. to the Govt. of Bengal.

LOCAL SELF-GOVERNMENT DEPARTMENT.

NOTIFICATIONS.

Minister-in-charge: The Hon'ble Sir Bijoy Prasad Singh Roy, Kt.

Hooghly.—No. 1639M.—25th March 1937.—In exercise of the power conferred by clause (*e*) of section 8 of the Bengal Municipal Act, 1932 (Bengal Act XV of 1932), and in modification of notification, dated the 15th December 1877, the Government of Bengal (Ministry of Local Self-Government) are pleased to declare that the boundaries of the Bansberia Municipality shall be as follows:-

North—Demra (jurisdiction list No. 24), Benipur (jurisdiction list No. 34), Hazipur (jurisdiction list No. 33).

East—By the river Hooghly from the southern boundary of the mauza Hazipur up to eastern boundary of plot No. 1835 of Keota mauza (jurisdiction list No. 7).

South—A line running by the southern boundary of plot Nos. 1835, 1811, 1762, 1761, 1760, 1759, 1758, 1757, 1756, 1755, 1754, 1773 and 1329 of mauza Keota, then turning towards the north by the western boundary of plot Nos. 1331, 1332, 1333, 1335, 1337 and 1338, then to the west by the southern boundary of plot No. 1342, thence towards the south by the eastern boundary of plot No. 1344, thence again to the west by the southern boundary of plot Nos. 1344, 1347, 1346 and 1312, thence to the north by the western boundary of plot Nos. 1312 and 1304, thence to the west by the southern boundary of plot Nos. 1304, 1215, 1214 and 1209, thence to the north by the western boundary of plot No. 1208, then to the west by the southern boundary of plot Nos. 1207, 1216 and 1201 and towards the north by the western boundary of plot No. 1201 (all the aforesaid plots being of mauza Keota, jurisdiction list No. 7), thence turning towards the west by the southern boundary of plot No. 2254 of Khamarpara mauza (jurisdiction list No. 7/22), thence to the north by the western boundary of plot Nos. 2254 and 2253 of Khamarpara mauza, thence towards the west by the southern boundary of plot No. 2252, then turning first towards the north and then towards the east by the western and northern boundaries respectively of plot No. 2252 of Khamarpara mauza, then towards the north by the western boundary of plot Nos. 2250, 2251, 2230 and 2229 of Khamarpara mauza, then towards the west by the southern boundary of plot Nos 2228 and 2227 and then towards the north by the western boundary of plot Nos. 2227, 2226 and 2225 of Khamarpara mauza, thence by the southern boundary of plot No. 2261 of Khamarpara mauza, thence by the western boundary of plot No. 2203 of Khamarpara mauza, thence by the southern and western boundaries of plot Nos. 2202, 2201, 2127, 2126, 2125 and 2124 of Khamarpara mauza and the southern boundary of plot No. 2101 of Khamarpara mauza (jurisdiction list No. 7/22).

West—Western boundary of plot Nos. 2101, 512, 511 and 510 of Khamarpara mauza, then turning towards the west by the southern boundary of plot No. 2201 of mauza Bansberia (jurisdiction list No. 53) and western boundary of plot Nos. 2201 and 1862 of the same mauza.

Chalk Bansberia (jurisdiction list No. 52) excepting the portion lying to the east of the western boundary of plot No. 1001 of mauza Chalk Bansberia, jurisdiction list No. 52.

Sankhanagore (jurisdiction list No. 38).

Gazghanta (jurisdiction list No. 41).

Amadghata (jurisdiction list No. 40) excepting plot No. 1255.

Joypore (jurisdiction list No. 22).

Dadpore (jurisdiction list No. 23).

24-Parganas. — No. 1637M.—25th March 1937.—The following draft of by-laws, which has been framed by the Commissioners of the Tollygunge Municipality, in the district of 24-Parganas, under section 434 of the Bengal Municipal Act, 1932 (Bengal Act XV of 1932), and which the Government of Bengal (Ministry of Local Self-Government) propose to confirm under section 506 of the Act, is published for the information of persons likely to be affected thereby.

2. The draft will be taken into consideration on the 1st August 1937, and any objection or suggestion received by the undersigned through the District Magistrate and the Divisional Commissioner before that date will be duly considered:—

Draft by-laws.

By-laws under section 434 for regulation of dairy and milk-supply.

1. *Registration of dairymen and dairies.*—The Municipal Commissioners may require by public notice the registration of all dairymen or persons selling milk and of all dairies within the municipality, within such period as may be fixed by them; whereupon no person shall keep any dairy within the area administered by the Commissioners, unless it has been registered, or carry on the business or trade of cow-keeper, dairyman or purveyor of milk, unless he is registered as such therein:

Provided that a person who sells milk of his own cows or buffaloes in small quantities to his workmen or to his neighbours for their convenience need not be so registered.

Note.—In these by-laws the term cow-keeper includes a keeper of buffaloes.

2. No dairy or milk shop shall be registered until the premises in which such trade is carried on have been inspected by the Health Officer or Sanitary Inspector or any competent officer appointed by the Commissioners for the purpose and until the Commissioners are satisfied with the arrangements for lighting, ventilation, drainage, conservancy, water-supply and general sanitary condition of such premises.

3. *Inspection.*—All dairies within a municipality shall be open to inspection at all times by the Commissioners or by the Health Officer, Sanitary Inspector or a person or persons authorised in this behalf at all hours of the day and night.

4. *Contamination of milk.*—No cow-keeper or dairyman or purveyor of milk or occupier of a milk store or milk shop shall—

(*a*) allow any person residing or employed in or about the premises, suffering from a dangerous or infectious disease, or having recently been in contact with a person so suffering, to milk cattle or to handle vessels used for holding or keeping milk or in any way to take part or assist in the conduct of the trade or business of the cow-keeper or dairyman or purveyor of milk or occupier of a milk store or milk shop, so far as regards the production, distribution or storage of milk, or

(*b*) if himself so suffering, or having recently been in contact with a person so suffering, milk cattle or handle vessels used for containing milk or in any way take part in the conduct of his trade or business so far as regards the production, distribution or storage of milk, until in each case all dangers therefrom of the communication of infection to the milk or of its contamination has ceased.

5. The cow-keeper or dairyman or purveyor of milk shall, when so required by the Commissioners, the Health Officer, Sanitary Inspector or any other person authorised in this behalf, furnish the names and addresses of his customers and the sources of supply of milk to his establishment.

6. *Existence of disease among cattle.*—If at any time cattle plague, pleuro-pneumonia, foot and mouth disease, anthrax, tuberculosis or any disease of the udder exist among the cattle in a dairy or cattle-shed, the dairyman or cow-keeper shall forthwith report such occurrence to the Commissioners and shall not—

(*a*) mix the milk of the diseased cattle therein with other milk,

(*b*) use or sell such milk for human consumption;

(*c*) use or sell such milk for consumption by any animal unless and until it has been boiled.

7. *Storage, conveyance and distribution of milk.*—No receptacle which is incapable of being readily cleansed, shall be used for the storage or conveyance of milk.

8. Every receptacle used for the storage or conveyance of milk shall be—

(*i*) marked with the name and address of the owner;

(*ii*) provided with a lid without openings and so constructed and fitted as to prevent the access of dirt, dust, water, or of milk which has been splashed above the lid.

9. No such receptacle shall be opened during transit, except for the purpose of checking and sampling the milk.

10. Where milk is delivered in bottles, such bottles must be filled and closed on registered premises, and not thereafter tampered with before delivery to the consumer.

11. Every person engaged in the conveyance or distribution of milk shall take all practicable precautions to prevent the milk from being contaminated.

12. Vehicles used for the conveyance of milk shall be kept clean and no live animal shall be conveyed or carried at the same time as the milk.

13. *Ventilation and lighting.*—Every cattle-shed and every building used for keeping or storing milk (other than a cold store) shall be provided with a sufficient area of windows or external openings communicating directly with the external air in order to secure adequate lighting and ventilation.

14. *Lighting.*—Places in which milking is carried on after dark, shall be provided with adequate artificial lighting.

15. *Air-space.*—No cow-keeper or dairyman shall allow any shed to be occupied by a larger number of animals than will leave not less than eight hundred feet of air-space for each cow or buffalo, provided as follows:—

(*a*) in calculating the air-space for the purpose of this by-law, no space shall be reckoned which is more than 16 feet above the floor; but if the roof or ceiling is inclined, then the mean height of the same above the floor may be taken as the height thereof for the purposes of this by-law;

(*b*) any cattle-shed constructed and used before the date of the enforcement of this by-law shall be exempted from its operation until two years after that date.

16. *Receptacles for water.*—All receptacles for the storage or conveyance of water shall be kept clean. A dairyman or cow-keeper shall ensure that the drinking water for cow is protected from contamination.

17. *Water-supply.*—Every person in charge of a dairy shall cause it to be provided with an adequate supply of good and wholesome water for cleansing such dairy or any vessel that may be used therein for containing milk, and for all other reasonable and necessary purposes in connection with the use thereof.

18. *Cleanliness of cattle-shed.*—No cow-keeper or dairyman or purveyor of milk or occupier of a milk store or milk shop shall use or permit to be used any milk store or milk shop in his occupation as a sleeping apartment or for any purpose incompatible with the cleanliness of the milk shop or milk store and of the milk vessels and the milk therein or in any manner likely to cause contamination of milk therein.

19. No cow-keeper or dairyman or purveyor of milk shall keep swine or poultry in any cattle-shed or other building used by him for keeping cows or in any milk store or other place used by him for keeping milk for sale.

20. Every cow-keeper and dairyman shall cause every part of the interior of every cattle-shed or dairy in his occupation to be thoroughly cleansed from time to time and as often as may be necessary to secure that such places shall be at all times reasonably clean.

21. Every cow-keeper and dairyman shall cause the ceilings and the walls of the cattle-shed or dairy in his occupation to be properly lime-washed at least twice every year and at such other times as may be necessary:

Provided that this requirement shall not apply to such ceilings and walls for which lime-washing is unsuitable.

22. Every cow-keeper and dairyman shall cause the floor of every such cowshed or dairy to be thoroughly washed, and all dung and offensive matter accumulating inside such shed or dairy to be swept and removed as often as may be necessary but not less than twice every day.

23. *Cleanliness of milk shop and milk store.*—Every occupier of a milk store or shop shall cause every part of the interior to be thoroughly cleansed from time to time and as often as may be necessary to maintain it in a thorough state of cleanliness.

24. *Health and inspection of milch animals in dairies.*—The Commissioners shall cause to be made such inspections of dairy cattle as may be necessary.

25. *Cleanliness of milk vessels.*—Every cow-keeper or dairyman shall from time to time and as often as may be necessary cause every milk vessel that may be used by him for the sale, conveyance or storage of milk to be thoroughly cleansed with steam or clean boiling water and shall otherwise take all proper precautions for the maintenance of such milk vessel in a constant state of cleanliness.

On every occasion when any such vessel shall have been used to contain milk or shall have been returned to him after having been out of his possession, he shall cause such vessel to be forthwith so cleansed.

26. *Protection of milk against infection or contamination.*—Every purveyor, seller or retailer of milk shall take all reasonable and proper precaution in connection wih the storage and distribution of milk and otherwise to prevent exposure of milk to any infection or contamination.

27. No purveyor, seller or retailer of milk shall deposit or keep any milk intended for sale—

(*a*) in any room or place where it would be liable to become infected or contaminated by impure air or by any offensive, noxious or deleterious gas or substance or by any noxious or injurious emanation, exhalation or effluvium;

(*b*) in any room used as a kitchen or living room;

(*c*) in any room or building or part of a building communicating directly by door, window or otherwise with any room used as a sleeping room or with a water-closet, earth-closet, privy cesspool or receptacle for ashes or with a room in which there may be any person suffering from an infectious or dangerous disease or which may have been used by any person suffering from any such disease and may not have been properly disinfected; or

(*d*) in any room or building or part of a building in which there is any untrapped inlet to any drain.

28. No cow-keeper or dairyman shall allow any milch cattle belonging to him or under his care or control to be milked for the purpose of obtaining milk for sale unless at the time of milking—

(*a*) the udder and teats of such cow are thoroughly clean; and

(*b*) the hands of the person milking such animals also are thoroughly clean and free from all infection and contamination.

29. All dirt shall be removed from the flanks of the cattle before milking is begun, and every person engaged in milking shall keep his body and clothing clean.

30 The floor of every milk store or milk shop shall be rendered impervious and sloping to a channel, so constructed as to prevent any liquid matter from accumulating; and to lead it directly to a drain outside the building

31. The owner of a milk store or shop shall cleanse as often as necessary all fittings, floors, and furniture.

32. No dairyman or seller of milk shall sell infected or contaminated milk, or milk suspected to be infected or contaminated.

33. No cow-keeper or dairyman shall keep in the shed in which the cattle are milked any animal the milk from which there is reason to believe has conveyed or is likely to convey any infectious disease.

34. It shall be lawful for the Commissioners to close, for such period as they may think fit, a dairy from which infected or contaminated milk is supplied for sale.

35. *Penalty.*—The penalty for the breach of any of the by-laws 3 to 22 and 25 to 33 shall be a fine which may extend to fifty rupees and when the breach is a continuing one, with a further fine not exceeding five rupees for every day after the date of first conviction during which the offender persists in the offence.

No. 1612L.S.-G. 23rd March 1937.—In exercise of the power conferred by clause (*m*) of sub-section (*2*) of section 101 of the Bengal Village Self-Government Act, 1919 (Bengal Act V of 1919), the Government of Bengal (Ministry of Local Self-Government) are pleased to make the following amendments in the rules published under notification No. 1918L.S.-G., dated the 24th June 1920, as subsequently amended, namely:—

Amendments.

1. In sub-rule (*6*) of rule 1 of the said rules, for the words, figures and letters "30th June" and "15th August" *substitute* the words, figures and letters "31st July" and "15th September", respectively.

2. In rule 18 of the said rules, for the word, figures and letters "30th June" *substitute* the word, figures and letters "31st July".

Bakarganj.—No. 1643M.—25th March 1937.—In exercise of the power conferred by section 506 of the Bengal Municipal Act, 1932 (Bengal Act XV of 1932), the Government of Bengal (Ministry of Local Self-Government) are pleased to confirm the by-laws framed by the Commissioners of the Jhalakati Municipality in the district of Bakarganj under section 355 of the said Act and published for information under notification No. 8287M., dated the 9th November 1936.

Bogra.—No. 1645M.—25th March 1937.—In exercise of the power conferred by section 506 of the Bengal Municipal Act, 1932 (Bengal Act XV of 1932), the Government of Bengal (Ministry of Local Self-Government) are pleased to confirm the by-laws framed by the Commissioners of the Bogra Municipality under section 434 of the said Act and published for information under notification No. 6347M., dated the 17th August 1936.

24-Parganas.—No. 1647M.—25th March 1937.—In exercise of the power conferred by section 506 of the Bengal Municipal Act, 1932 (Bengal Act XV of 1932), the Government of Bengal (Ministry of Local Self-Government) are pleased to confirm the by-laws framed by the Commissioners of the Bhatpara Municipality in the district of 24-Parganas under sections 269 (*d*), (*e*), (*f*) and 277 of the said Act and published for information under notification No. 6587M., dated the 29th November 1935.

Nadia.—No. 1649M.—25th March 1937.—In exercise of the power conferred by section 506 of the Bengal Municipal Act, 1932 (Bengal Act XV of 1932), the Government of Bengal (Ministry of Local Self-Government) are pleased to confirm the by-laws framed by the Commissioners of the Chakdah Municipality in the district of Nadia under section 417 of the said Act and published for information under notification No. 6869M., dated the 2nd September 1936.

Jessore. — No. 1674L.S.-G. — 27th March 1937.—Whereas the term of office of the members of the Jessore district board expired on the 14th February 1937, under sub-section (*3*) of section 19A of the Bengal Local Self-Government Act of 1885 (Bengal Act III of 1885):

And whereas the local boards in the district of Jessore failed to elect the prescribed proportion of elected members of the said district board within the time prescribed by the proviso to rule 54 (*1*) of the Election Rules framed under section 138 of the said Act:

Now, therefore, in exercise of the power conferred by sub-section (*1*) of section 10 of the said Act, the Government of Bengal (Ministry of Local Self-Government) are pleased to appoint the 17th April 1937 as the date on which another election shall be held by the said local boards to fill the said vacancies with the exception of the Magura local board. Government approve of 30th March as the date for election by the Magura local board of members to the district board.

Medical.

Minister-in-charge: The Hon'ble Sir Bijoy Prasad Singh Roy, Kt.

Calcutta. — No. 896Medl. — 18th March 1937.—Dr. Md. Khabir, on supernumerary duty at the Presidency General Hospital, Calcutta, is appointed to act as House Surgeon of the same institution, with effect from the 12th October 1936, *vice* Dr. J. A. Hyde, I.M.D.

This department notification No. 8Medl., dated the 4th January 1937, is hereby cancelled.

Jalpaiguri.—No. 1126Medl.—22nd March 1937.—Dr. Radha Raman Roy, Teacher of Medical Jurisprudence and Hygiene, Jackson Medical School, Jalpaiguri, is granted leave on average pay for two months, under rules 81 (*b*) (*ii*) and 82 (*b*) of the Fundamental Rules, with effect from the 12th April 1937, or from any subsequent date on which he is relieved.

Calcutta-Jalpaiguri.—No. 1127Medl.—22nd March 1937.—Dr. Upendra Chandra Sarkar, officiating Demonstrator of Anatomy, Medical College, Calcutta, is appointed to act, until further orders, as Teacher of Medical Jurisprudence and Hygiene, Jackson Medical School, Jalpaiguri, *vice* Dr. Radha Raman Roy.

Calcutta.—No. 1130Medl.—22nd March 1937.—Dr. Narayan Chandra Mitra, Demonstrator of Anatomy, Medical College, Calcutta, is granted leave on average pay for the period from the 20th February to the 25th March 1937, under rules 81 (*b*) (*ii*) and 82 (*b*) of the Fundamental Rules.

Calcutta.—No. 1131Medl.—22nd March 1937.—Dr. Upendra Chandra Sarkar, on relief from the Pathology Department, Medical College, Calcutta, is appointed to act as a Demonstrator of Anatomy in the same institution, with effect from the 4th March 1937, *vice* Dr. Narayan Chandra Mitra, or until further orders.

Calcutta.—No. 1189Medl.—25th March 1937.—Lt.-Col. E. H. V. Hodge, I.M.S., Professor of Medicine, Medical College, and Physician, College Hospitals, Calcutta, is granted leave on average pay for six months, under rule 81 (*b*) (*i*) of the Fundamental Rules, with effect from the 9th April 1937 or from any subsequent date on which he is relieved.

Calcutta.—No. 1190Medl.—25th March 1937.—Major T. H. Thomas, I.M.S., on return from leave, is appointed, until further orders, to act as Professor of Medicine, Medical College, and Physician, College Hospitals, Calcutta, *vice* Lt.-Col. E. H. V. Hodge, I.M.S.,

NOTIFICATION.

Minister-in-charge: The Hon'ble Sir Bijoy Prasad Singh Roy, Kt.

No. 927Medl.—22nd March 1937.—The following rules framed by the Government of Bengal (Ministry of Local Self-Government) under sub-section (*1*) and clauses (*b*), (*c*) and (*d*) of sub-section (*2*) of section 29 of the Statutes appended to Government resolution No. 315Medl., dated the 2nd February 1937, regarding the General Council and State Faculty of Ayurvedic Medicine, Bengal, are published for general information:—

Rules.

Rules under clause (b) of sub-section (2) of section 29 of the Statutes.

Form of the Register of Registered Ayurvedic Practitioners.

1. The Register of Registered Ayurvedic Practitioners shall be maintained in Form No. 1 in the Appendix to these rules.

2. The names shall be entered in the Register in the order in which the applications are admitted and sufficient space shall be left for future additions or alterations in the qualifications and address of each entry.

3. Each page of the Register shall be verified by the Registrar's signature.

Rules under clause (c) of sub-section (2) of section 29 of the Statutes.

Application of fees and donations.

4. All moneys received by the Registrar as fees or donations shall be credited to the Imperial Bank of India.

Rules under clause (d) (i) of sub-section (2) of section 29 of the Statutes.

Procedure to be followed in conducting any enquiry referred to in proviso (b) to section 17 and sub-clause (ii) of clause (a) of section 24 of the Act.

5. Whenever information is received that an Ayurvedic Practitioner, who is an applicant for registration, or whose name has already been registered, has been guilty of conduct which *primâ facie* constitutes infamous conduct in a professional respect, the Registrar shall make an abstract of such information and of such further informations as he may have subsequently obtained.

6. Where the information in question is in the nature of a complaint by a person or body charging the Practitioner with infamous conduct in a professional respect, such complaint shall be made in writing addressed to the Registrar, and shall state the grounds of complaint and shall be accompanied by one or more declarations as to the facts of the case except when the complaint is by a Government Department.

7. Every declaration must state the description and true place of abode of the declarant, and where the fact stated in a declaration is not within the personal knowledge of the declarant, the source of the information and grounds for the belief of the declarant in its truth must be accurately and fully stated.

8. (*1*) The abstract and all other documents bearing on the case together with any complaint that may have been lodged shall be submitted by the Registrar to the President, who shall, if he thinks fit, instruct the Registrar to ask the Practitioner by means of a registered letter for an explanation within a time to be fixed by the President. After the expiry of that time the documents with the explanation, if any, shall be referred for consideration to a Penal Cases Committee which shall be appointed by the Council. The Committee shall have power to cause further investigation to be made and further evidence to be taken and, if necessary, obtain further legal or other advice.

(*2*) The Committee shall report to the Council, and if the Council consider that the case is one in which an enquiry ought to be held by the Council, the President shall direct the Registrar to take steps for the institution of an enquiry and for having the case heard and determined by the Council.

9. The enquiry shall be instituted by the issue of a notice in writing, on behalf of the Council, by the Registrar, addressed to the Practitioner. Such notice shall specify the nature and particulars of the charge, shall inform the Practitioner of the day on which the Council intend to deal with the case, and shall call upon him to answer the charge in writing and to attend before the Council on that day.

10. The notice referred to in rule 9 shall be in Form No. II in the Appendix to these rules, with such variations as circumstances may require. It shall be sent at least twenty-one days before the date of the enquiry, and shall be accompanied by a copy of section 17 or 24 of the Statutes, as the case may be, and of the rules to regulate the procedure for conducting any enquiry referred to in those sections. A copy of the notice should at the same time be sent to the complainant, if any.

11. In every case in which the Council resolve that an enquiry shall be instituted and a notice for an enquiry is issued accordingly, the complainant (if any) and the Ayurvedic Practitioner charged shall, upon request in writing for that purpose signed by him or his legal representative, be entitled to be supplied by the Registrar with a copy of any declaration, explanation, answer or other document given or sent to the Council by or on behalf of the other party, which such other party will be entitled on proper proof to use at the hearing as evidence in support of or in answer to the charge specified in the notice of enquiry.

12. Any application made by the Ayurvedic Practitioner between the date of issue of the notice and the day named for the hearing of the charge shall be dealt with by the President in such manner as he shall think fit.

13. Copies of all material documents which are to be laid before the Council as evidence in regard to the case shall be furnished to each member of the Council before the hearing of the case.

14. At the hearing of the case by the Council, the complainant and also the Practitioner may be represented or assisted by a legal representative.

15. Where a complainant appears personally or by a legal representative, the order of procedure shall be as follows:—

(*1*) The Registrar will read to the Council the notice of the enquiry addressed to the Practitioner.

(*2*) The complainant will then be invited to state his case himself or by his legal representative and to produce his proofs in support of it. At the conclusion of the complainant's proofs his case will be closed.

(*3*) The Practitioner will then be invited to state his case himself or by his legal representative, and to produce his proofs in support of it. He may address the Council either before or at the conclusion of his proofs, but only once.

(*4*) At the conclusion of the Practitioner's case, the Council will, if the Practitioner has produced evidence, hear the complainant in reply on the case generally, but will hear no further evidence except in any special case in which the Council may think it right to receive such further evidence. If the Practitioner produces no evidence, the complainant will not be heard in reply, except by special leave of the Council.

(5) Where a witness is produced by any party before the Council, he will be first examined by the party producing him, and then cross-examined by the adverse party, and then re-examined by the party producing him. The Council may decline to admit in evidence any declaration where the declarant is not present for, or declines to submit to, cross-examination.

(6) The Chairman of the meeting may put questions to any witness, and members of the Council, through the Chairman, may also put questions to any witness.

16. Where there is no complainant, or no complainant appears, the order of procedure shall be as follows:—

(1) The Registrar will read to the Council the notice of enquiry addressed to the Practitioner and will state the facts of the case and produce before the Council the evidence by which it is supported.

(2) The Practitioner will then be invited to state his case himself or by his legal representative, and to produce his proofs in support of it. He may address the Council either before or at the conclusion of his proofs, but only once.

17. (1) Upon the conclusion of the case the Council will deliberate thereon in private, and at the conclusion of the deliberations the Chairman shall call upon the Council to vote on the question whether the Ayurvedic Practitioner charged is guilty of infamous conduct in a professional respect.

(2) If the Council, by a majority of two-thirds of the members present and voting at the meeting, find the Ayurdevic Practitioner guilty of infamous conduct in a professional respect, the Council shall direct the Registrar not to register his name, if he be an applicant for registration or to remove his name from the Register of Registered Ayurvedic Practitioners, if he is already a Registered Ayurvedic Practitioner or to warn or to censure him.

18. When the registration of the name of any Ayurvedic Practitioner is refused, or when the name of any Registered Ayurvedic Practitioner is removed from the Register in accordance with the provisions of the preceding rules, the Registrar shall forthwith send notice of such refusal or removal to the Practitioner, by a registered letter addressed to his last known address. The Registrar shall also send, forthwith, intimation of any such refusal or removal to the body or bodies from whom the Practitioner received his qualification or qualifications, and shall request them not to admit him without previous reference to the Council to any examination for any new qualification which is registrable in the Register of Registered Ayurvedic Practitioners. If a name is removed from the Register, the Registrar shall issue a notification in the *Calcutta Gazette* announcing the removal and may forward a summary of the proceedings and findings to Ayurvedic journals, if any, for publication.

Rules under clause (d) (ii) of sub-section (2) of section 29 of the Statutes.

Disposal of appeals from the decision of the Registrar preferred under section 22 of the Statutes.

19. An appeal to the Council, preferred under section 22 of the Statutes, against a refusal of the Registrar to register the name or any title or qualification of any person on the Register of Registered Ayurvedic Practitioners, shall be in writing and shall state the grounds on which registration is claimed, the names of the qualifications, and the dates on which and the authorities from whom they were received.

20. On receipt of such an appeal, it shall be referred to a Committee of the Council for consideration and report.

21. The Committee shall have power to call for the original diploma or license, etc., from the appellant for inspection and also such other documentary or oral evidence as may be considered necessary by them.

22. At the conclusion of their enquiry, the Committee shall make a report to the Council embodying such recommendations as they shall think fit to make, with the reasons for the recommendations.

23. The appeal, the Committee's report on it, and all other documents in connection with the case shall be laid before the Council at their next meeting.

24. The date on which the appeal is to be taken up by the Council shall be notified to the appellant. The appellant shall also be allowed, if he so chooses, to represent his case before the Council, either by himself or by his legal representative.

Rules under clause (1) of section 29 of the Statutes.

Rules for the restoration of names to the Ayurvedic Register.

RESTORATION AFTER NON-PENAL ERASURE UNDER SECTION 16 OF THE STATUTES.

25. (*1*) The Council may restore to the Ayurvedic Register, if they see fit, the name of any person which may have been erased therefrom under section 16 of the Statutes.

(*2*) No application for the restoration of a name so removed shall be entertained unless it be accompanied by a declaration from the applicant setting forth the facts of the case, and stating that he is the person originally registered, and by one of the following documents:—

(*a*) Applicant's diploma;
(*b*) his certificate of registration in original;
(*c*) A certificate in the form reproduced below from two Ayurvedic Practitioners registered under the Statutes as to his identity;
(*d*) if the applicant is not resident in Bengal, a certificate signed by two persons, who shall be Magistrates or Government officers of gazetted rank or officers holding a commission in one of His Majesty's Services, Civil, Naval, or Military, or Justices of the Peace.

(*3*) A fee of Rs. 5 shall be levied for the re-registration of practitioners whose names have been erased from the Register under section 16 of the Statutes.

"I hereby certify that the aforesaid applicant is the above specified .....whose name formerly stood in the Ayurvedic Register with the following address and qualification*:—

Name†.....
Address.....
Designation, rank or commission.....
Date....."

*Here insert applicant's former address and registered qualification.
†Here insert name and address of person certifying.

RESTORATION AFTER PENAL REMOVAL UNDER SECTION 24 OF THE STATUTES.

26. An application for the restoration to the Ayurvedic Register of a name removed under section 24 of the Statutes shall not be entertained before the ordinary meeting of the Council next succeeding that in which the removal was ordered.

If any person whose name has been removed from the Ayurvedic Register by direction of the Council, and who still possesses a qualification entitling him to be registered, makes an application to the Council for the restoration of his name to the Register, the following shall be the method of procedure:—

(*i*) The application shall be in writing, addressed to the Council, and signed by the applicant, and must state the grounds on which the application is made.

(*ii*) The application shall be accompanied by (*1*) a declaration made by the applicant setting forth the facts of the case, and stating that he is the person originally registered, and (*2*) by one of the following documents:—

(*a*) Applicant's diploma;
(*b*) His certificate of registration in original;
(*c*) A certificate in the form reproduced below from two Ayurvedic Practitioners registered under the Statutes as to his identity;
(*d*) If the applicant is not resident in Bengal, a certificate signed by two persons, who shall be Magistrates or Government officers of gazetted rank or officers holding a commission in one of His Majesty's Services, Civil, Naval, or Military, or Justices of the Peace.

Each of these certificates of identity shall be in the following terms:—

"I hereby certify that the aforesaid applicant is the above specified..... .....whose name formerly stood in the Ayurvedic Register with the following address and qualification*:—

Name†.....

Address.....

Designation, rank or commission.....

Date....."

*Here insert applicant's former address and registered qualification.

†Here insert name and address of person certifying.

(*iii*) The statements in the application must also be verified by certificates in writing, to be given by two Ayurvedic Practitioners registered under the Statutes or two Government officers of gazetted rank, resident in the neighbourhood where the applicant had been residing since his removal, who were and are well acquainted with him before and since the removal of his name, and they must testify to his present good character.

(*iv*) On receipt of the application, it shall be referred by the Registrar to a Penal and Ethical Cases Committee, which shall be appointed by the Council, for consideration and report. Before an application is considered by the Committee, the Registrar shall notify the same to the institution or institutions whose qualifications were held by the applicant at the time his name was removed; and shall further, by letter addressed to the person or body (if any) on whose complaint the applicant's name was removed, give notice of the application and of the time when the Committee intend to consider the same.

(*v*) The Penal and Ethical Cases Committee shall consider the application and may, if they think fit, adjourn the consideration of it to a future date or require further evidence or explanations from the applicant.

(*vi*) The Penal and Ethical Cases Committee shall make a report upon the application to the Council *in camera* embodying in that report such recommendations as the Committee shall think fit to make, with the reasons for the recommendations.

(*vii*) The application and the certificates referred to in paragraph (*iii*) shall be in the Forms III and IV in the Appendix with such variations as circumstances may require. Printed forms shall be kept by the Registrar who shall supply them to intending applicants.

APPENDIX.

Form No. I.

(*Vide Rule 1.*)

The Register of Registered Ayurvedic Practitioners.

1	2	3	4	5	6		
					Date and reason of removal.		
Serial No.	Date of registration.	Name.	Address or appointment.	Qualifications and dates thereof.	Date.	Section of the Statutes under which the name is removed.	Remarks.

Form No. II.

(Vide Rule 10.)

Notice to Practitioner to attend proceedings in connection with the enquiry under section 17 or 24 of the Statutes.

SIR,

On behalf of the General Council and State Faculty of Ayurvedic Medicine, I give you notice that information and evidence have been laid before the Council by which the complainants make the following charge against you, namely (here set out the circumstances briefly), and that in relation thereto you have been guilty of infamous conduct in a professional respect.

And I am directed further to give you notice that on the of 19 , a meeting of the Council will be held at o'clock in the to consider the abovementioned charges against you and decide whether or not they should direct that your name shall not be registered in/that your name be removed from the Register of Registered Ayurvedic Practitioners pursuant to section 17/24 of the Statutes appended to Government Resolution No. 315Medl., dated the 2nd February 1937. You are invited and required to answer in writing the above charges and to attend before the Council at the abovenamed place and time, to establish any denial or defence that you may have to make to the abovementioned charges, and you are hereby informed that if you do not attend as required, the Council may proceed to hear and to decide upon the said charges in your absence.

Any answer or other communication or application which you may desire to make respecting the said charges, or your defence thereto, must be addressed to the Registrar of the General Council and State Faculty of Ayurvedic Medicine and transmitted so as to reach him not less than days before the day appointed for the hearing of the case.

A copy of the 17th/24th section of the Statutes and of the rules to regulate the procedure for conducting any enquiry referred to in that section, to which your particular attention is invited, is enclosed herewith for your information.

Registrar.

Form No. III.

(Vide Rule 26.)

Declaration by applicant for restoration of name to the Ayurvedic Register.

To the General Council and State Faculty of Ayurvedic Medicine, Bengal.

"(*i*) I, the undersigned* now holding the qualification of† , do solemnly and sincerely declare that the following are the facts of my case, and in reason of which I seek restoration of my name to the Ayurvedic Register.

(*ii*) In the year (*a*) my name was duly registered in the Ayurvedic Register in respect of the following qualifications, namely (*b*) , and on the date of the removal of my name hereinafter mentioned I was registered in respect of the same qualifications (*c*), and also in respect of the following additional qualifications, namely.....

(*iii*) At an enquiry held on the (*d*).....day of.....the General Council and State Faculty of Ayurvedic Medicine, Bengal, directed my name to be removed from the Ayurvedic Register on a complaint made to the said Council by (*e*)..... ....of.....and the offence for which the Council directed the removal of my name was (*f*) .....

*Insert full name.
†Insert qualifications, if any.
(*a*) Insert date.
(*b*) Insert original qualifications.
(*c*) To be added to, if necessary.
(*d*) Insert date of enquiry.
(*e*) Insert name and address of complainant.
(*f*) Insert charge on which name was removed.

(*iv*) Since the removal of my name from the Ayurvedic Register I have been residing at (*g*).....and my occupation has been.....

(*v*) It is my intention if my name is restored to the Ayurvedic Register to (*h*)..... .

(*vi*) The grounds of application are (*i*).....

(*Signed*)

Declared at.....on.....before me.

A Commissioner for Oaths, or Justice of the Peace or Magistrate.

(*g*) The blanks in this paragraph must be filled in according to circumstances.

(*h*) Insert particulars as to proposed future professional occupation.

(*i*) All facts and grounds on which the application is made should be clearly and concisely stated.

Form No. IV.

(*Vide Rule 26.*)

CERTIFICATE IN SUPPORT OF APPLICATION.

I,.....

of.....

certify as follows:—

(*i*) I am.....

(*ii*) I have read paragraphs (*iv*) and (*v*) of the application of..... .....and say that I have been and am well acquainted with the said.....both before and since his name was removed from the Ayurvedic Register, that I believe him to be now a person of good character, and that the statements in the said paragraphs are to the best of my knowledge, information and belief true.

(*Signed*)

(*Name*)

(*Address and qualification*)

Public Health.

NOTIFICATIONS.

No. 1162P.H.—25th March 1937.—For the purposes of the Paris Sanitary Convention, 1926, and with reference to rule 1(*5*) of the rules framed under section 6, sub-section (*1*), clause (*p*) of the Indian Ports Act, 1908 (Act XV of 1908), and published in Marine Department notification No. 16Mne., dated the 6th March 1917, the Governor in Council is pleased to declare Bassein to be an infected port on account of cholera.

Minister-in-charge: The Hon'ble Sir Bijoy Prasad Singh Roy, Kt.

Jalpaiguri.—No. 1152P.H.—25th March 1937.—In exercise of the power conferred by section 311 of the Bengal Municipal Act, 1932 (Bengal Act XV of 1932), the Government of Bengal (Ministry of Local Self-Government) are pleased to make the following amendment in the House-connection Rules of the Jalpaiguri Municipality, which were published under notification No. 2241-P.H., dated the 9th October 1934:—

Amendment.

"*Substitute* the following *for* rule 2:—

2. A fee of Rs. 40 shall be paid to the Commissioners by such owner or occupier for each connection to a municipal main supply pipe before any work is commenced. An additional fee of Rs. 35 shall be paid within six months of the date of the application, failing which the connection will be cut off. The total fee shall be in addition to all other costs and charges imposed under these rules."

Malda.—No. 1147P.H.—25th March 1937.—In exercise of the power conferred by section 2A, read with sub-section (*1*) of section 2 of the Epidemic Diseases Act, 1897 (Act III of 1897), the Government of Bengal (Ministry of Public Health) are pleased to prescribe the following additional temporary regulations for the prevention and control of small-pox in the district of Malda, which will remain in force during the currency of the regulations promulgamated under notification No. 3970P.H., dated the 12th October 1936:—

1. No person while suffering from evident symptoms of small-pox or in the convalescent state of the disease with scabs of pocks on his body shall expose himself in any street, road, public place, shop, bazar or any place used in common by persons other than members of the family or household to which such infected person belongs or shall move from place to place unless he is proceeding to a hospital for admission and treatment.

2. The District Health Officer or a Sanitary Inspector may during the prevalence of any outbreak of small-pox order that any bazar, shop or other public place shall remain closed for such time as may appear to him to be necessary and may forbid the holding of any fair, mela or other gathering to which people from several villages commonly or periodically resort.

3. No person shall carry or permit to be carried in a public conveyance a patient except in the case where a patient is carried with proper precautions to a hospital.

4. No person shall expose in any street, shop, bazar or any public place any clothing, bedding or other article which has been in contact with a patient or shall cause or suffer such articles to be carried in any public conveyance, but nothing in this regulation shall apply to a person who transmits with proper precautions against spreading the disease any such article for the purpose of having the same disinfected.

5. No person shall carry or permit to be carried in a public conveyance the dead body of any person who has died of small-pox without the previous written permission of the District Health Officer or Sanitary Inspector, and without taking proper precautions against spreading the said disease.

Calcutta. — No. 1158P.H. — 25th March 1937.—Dr. S. N. Sur, M.D., D.P.H., D.T.M., Assistant Director of Public Health for Malaria Research, was appointed to act as Director of Public Health, Bengal, exclusively from the 18th October 1936, during the absence, on leave, of Lt.-Col. A. C. Chatterji.

G. S. DUTT,
Secy. to the Govt. of Bengal.

Orders by the Chief Engineer, Public Health Department, Bengal.

No. 1889.—20th March 1937.—Rai Sahib Surendra Narayan Roy, B.E., A.M.I.E. (Ind.), Assistant Engineer, Dacca City Subdivision, Public Health Department, Bengal, is granted leave on average pay from 15th to 23rd January 1937, both days inclusive, with permission to affix Sunday, the 24th January 1937, to the leave under rule 81 (*b*) (*ii*) of the Fundamental and Subsidiary Rules. This supersedes this office memorandum No. 295, dated 16th January 1937.

F. C. GRIFFIN, *Chief Engineer.*

EDUCATION DEPARTMENT.

NOTIFICATIONS.

No. 1325Edn. — 22nd March 1937. — In exercise of the power conferred by section 6, sub-section (*1*), clause (*c*), and section 10 of the Indian Universities Act, 1904 (VIII of 1904), as amended by the Calcutta University Act, 1921 (VII of 1921), His Excellency the Chancellor of the Calcutta University is pleased to re-nominate Sir Manmathanath Mukerjee, Kt., M.A., B.L., to be an Ordinary Fellow of the University.

Darjeeling. — No. 1459Edn. — 25th March 1937.—Mr. J. H. Heywood, officiating Physical Training Instructor and Games Master, Victoria Boys' School, Kurseong, is confirmed in the appoinment, with effect from the 16th January 1937, *vice* Mr. F. Berry, retired.

Minister-in-charge: The Hon'ble Khan Bahadur M. Azizul Haque, C.I.E.

Howrah. — No. 1240Edn. — 19th March 1937.—Maulvi Khaliluddin Bhuiyan, Subdivisional Inspector of Schools, Howrah, acted in the Bengal Educational Service as District Inspector of Schools, Howrah, for the period from the 16th November to the 9th December 1936, pending the arrival of Babu Umesh Chandra De.

Birbhum-Bankura.—No. 1268Edn.—19th March 1937.—Babu Bama Charan Das, Head Master, Birbhum Zilla School, is transferred to the Bankura Zilla School, with effect from the date on which he joins the appointment, *vice* Mr. Jatindra Chandra Guha, transferred.

Birbhum.—No. 1269Edn.—19th March 1937. —Maulvi A. K. Lutfe Ahmad Siddique, son of Maulvi Muhammad Fazl Bari Chaudhury, is appointed to the Bengal Educational Service as a Head Master, *vice* Babu Aswini Kumar Bhattacharji, retired, and is posted to the Birbhum Zilla School, *vice* Babu Bama Charan Das, transferred.

Calcutta. — No. 1295Edn. — 22nd March 1937.—Dr. Jogish Chandra Sinha, Professor of Political Economy, Presidency College, Calcutta, is allowed "earned leave" for two days, viz., the 19th and 20th February 1937, under rule 13 (*b*) of the Bengal Services (Revision of Leave) Rules, 1934, in extension of the leave already granted to him.

Nadia-Murshidabad.—No. 1298Edn.—22nd March 1937.—Miss Mrinalini Bose, Assistant Inspectress of Schools, Presidency Division (Nadia and Murshidabad), is allowed leave on half average pay for one month and one day, with effect from the 22nd February 1937, under rule 81 (*d*) of the Fundamental Rules, in extension of the leave already granted to her.

Dacca Divn.—No. 1432Edn.—25th March 1937.—Dr. Jyotish Govinda Sen, Second Inspector of Schools, Dacca Division, in the Bengal Educational Service, acted in the Bengal Senior Educational Service for the period from the 7th to the 23rd December 1936 (both days inclusive), *vice* Mr. Kshetrapal Das Ghosh, on deputation.

Hooghly.—No. 1451Edn.—25th March 1937.—Babu Hem Chandra Sen Gupta, Professor of Mathematics, Hooghly Mohsin College, is appointed to act in the Bengal Senior Educational Service as Principal of the College, with effect from the 2nd July 1937, or any subsequent date on which he assumes charge, during the absence, on leave, of Mr. K. Zachariah, or until further orders.

Calcutta-Hooghly.—No. 1452Edn.—25th March 1937.—Babu Sachchidananda Bhattacharyya, Lecturer in History, Sanskrit College, Calcutta, is appointed to act in the Bengal Educational Service as Professor of History, Hooghly Mohsin College, with effect from the 2nd July 1937, or any subsequent date on which he joins the appointment, *vice* Babu Hem Chandra Sen Gupta, on deputation.

Dacca Divn.—No. 1455Edn. — 25th March 1937. — Miss Niranjan Kumari Bairagi, Assistant Inspectress of Schools, Dacca Division, is allowed leave not due on half average pay on medical certificate for four months, with effect from the 18th February 1937, under rule 81 (*c*) (*i*) of the Fundamental Rules, in extension of the leave already granted to her.

Calcutta-Presidency Divn. — No. 1462Edn. —25th March 1937.—Maulvi Syed Wajahat Hossain, officiating Assistant Master, Hare School, Calcutta, is appointed to act in the Bengal Educational Service as Assistant Inspector of Schools for Muhammadan Education, Presidency Division, with effect from the date on which he joins the appointment, *vice* Khan Sahib Maulvi Abdul Khaleque, on deputation, or until further orders.

Registration.

NOTIFICATIONS.

Minister-in-charge: The Hon'ble Khan Bahadur M. Azizul Haque, C.I.E.

No. 280Regn.—19th March 1937. — The following amendment in the Bengal Registration Rules, 1927, published under notification No. 880Regn., dated the 1st April 1927, made by the Inspector-General of Registration under sub-section (*1*) of section 69 of the Indian Registration Act, 1908 (XVI of 1908), has been approved by the Government of Bengal (Ministry of Education) under sub-section (*2*) of that section:—

Delete the word *lengthways* after the word *lithographed* in sub-rule (*2*) of rule 75 of the said rules.

Bakarganj.—No. 282Regn.—25th March 1937.—Maulvi Irfanuddin Ahmed, District Sub-Registrar of Bakarganj, is allowed leave on average pay for one month from the 10th April 1937, under rule 81(*b*)(*ii*) of the Fundamental Rules.

Rangpur - Tippera - Calcutta-24-Parganas-Dacca - Birbhum - Mymensingh - Chittagong-Khulna - Pabna - Bakarganj-Nadia-Hooghly-Malda.—No. 285Regn.—25th March 1937.—The following probationers in the Registration Department are posted to stations mentioned against their names:—

(1) Babu Birendra Kumar Bhowmik, B.A.—Rangpur.

(2) Maulvi Abu Isa Muhammad Mustafa, B.A.—Comilla (Tippera).

(3) Babu Sudhir Kumar Basu, B.A.—Calcutta.

(4) Babu Kedareswar Banarji, B.SC.—Alipore (24-Parganas).

(5) Maulvi Kazi Abu Talib Muhammad Imam Hossain, B.A.—Dacca.

(6) Babu Tarak Das Ray, M.A.—Suri (Birbhum).

(7) Maulvi Muhammad Jamaluddin, M.A.—Mymensingh.

(8) Maulvi Abdul Matin, M.A.—Chittagong.

(9) Maulvi A. R. M. Motiur Rahman, B.A.—Khulna.

(10) Maulvi Mansur Ahmad, B.A.—Pabna.

(11) Maulvi Saiyed Hussainuddin Ahmed, B.A.—Alipore (24-Parganas).

(12) Babu Khagendra Nath Boidya, B.A.—Barisal (Bakarganj).

(13) Maulvi M. Ashraful Haque—Krishnagar (Nadia).

(14) Babu Gobinda Lall Sinha Ray—Chinsurah (Hooghly).

(15) Babu Nikhil Ranjan Sanyal—Malda.

T. M. Dow,

Secy. to the Govt. of Bengal (offg.).

Orders by the Inspector-General of Registration, Bengal.

Chittagong.—No. 136.—20th March 1937.—Babu Nirendra Nath Kanungo, 2nd Joint Sub-Registrar of Satkaniya at Adhunagar, in the district of Chittagong, is allowed leave on average pay for one day on the 17th February 1937, under rule 81 (*b*) (*ii*) of the Fundamental Rules.

Midnapore.—No. 137.—20th March 1937.—Babu Bishnupada Sinha, officiating Sub-Registrar of Khajri, in the district of Midnapore, is allowed earned leave on average pay for four days, under rule 9 of the Bengal Services (Revision of Leave) Rules, 1934, with effect from the 22nd March 1937.

Faridpur.—No. 138.—20th March 1937.—Babu Nikunja Behari Sen Gupta, Joint Sub-Registrar of Palong at Damadiya, in the district of Faridpur, is allowed leave on average pay for one day on the 25th March 1937, under rule 81 (*b*) (*ii*) of the Fundamental Rules.

Bogra.—No. 139.—20th March 1937.—Babu Jyotish Chandra Maitra, Sub-Registrar of Adamdighi, in the district of Bogra, is allowed leave on average pay for one day on the 25th March 1937, under rule 81 (*b*) (*ii*) of the Fundamental Rules.

Tippera.—No. 140.—20th March 1937.—Maulvi A. B. Sharfuddin Ahmed, Sub-Registrar attached to the Sadar Registration office at Comilla, Tippera, is allowed leave on average pay for one day on the 25th March 1937, under rule 81 (*b*) (*ii*) of the Fundamental Rules.

Dacca.—No. 141.—20th March 1937.—Maulvi Md. Jalaluddin, Sub-Registrar attached to the Sadar Registration office at Dacca, under orders of transfer to Rupganj in the same district, is allowed leave on average pay for one day on the 25th March 1937, under rule 81 (*b*) (*ii*) of the Fundamental Rules.

Bankura-Hooghly.—No. 142.—20th March 1937.—Babu Ramaprosad Mukharji, Sub-Registrar attached to the Sadar Registration office at Bankura, is appointed to act as Sub-Registrar of Arambagh, in the district of Hooghly, with effect from the 4th March 1937, till relieved by Babu Bijoy Kumar Neogi, or until further orders.

Midnapore.—No. 143.—20th March 1937.—Maulvi Quazi Md. Saifullah, officiating Sub-Registrar of Patashpur, in the district of Midnapore, is allowed earned leave on average pay for one day, on the 25th March 1937, under rule 9 of the Bengal Services (Revision of Leave) Rules, 1934.

24-Parganas.—No. 144.—20th March 1937.—Babu Abani Bhusan Chakrabatti, Sub-Registrar of Kakdwip, in the district of the 24-Parganas, is allowed leave on average pay for one day on the 25th March 1937, under rule 81 (*b*) (*ii*) of the Fundamental Rules.

Bogra.—No. 145.—20th March 1937.—Babu Nripendra Kumar Ghosh, Sub-Registrar of Shibganj, in the district of Bogra, is allowed leave on average pay for one day on the 25th March 1937, under rule 81 (*b*) (*ii*) of the Fundamental Rules.

24-Parganas.—No. 146.—20th March 1937.—Babu Nripendra Nath Basu, Joint Sub-Registrar of Joynagar at Dakshin Barasat, in the district of the 24-Parganas, is allowed leave on average pay for one day on the 25th March 1937, under rule 81 (*b*) (*ii*) of the Fundamental Rules.

Midnapore.—No. 147.—20th March 1937.—Babu Narmada Ranjan Das Gupta, officiating Sub-Registrar of Chandrakona, in the district of Midnapore, is allowed leave on average pay for four days, under rule 81 (*b*) (*ii*) of the Fundamental Rules, with effect from the 22nd March 1937.

Dacca.—No. 148. — 20th March 1937. — Babu Jogendra Nath Chatterji, Sub-Registrar of Rupganj, in the district of Dacca, is allowed leave on average pay for twenty-one days, under rule 81 (*b*) (*ii*) of the Fundamental Rules, with effect from 1st March 1937.

Dacca.—No. 149. — 20th March 1937. — Maulvi Md. Jalaluddin, Sub-Registrar attached to the Sadar Registration office at Dacca, on the termination of his officiating appointment at Kaliakair in the same district, is appointed to act as Sub-Registrar of Rupganj also in the same district, during the absence, on leave, of the permanent incumbent, or until further orders.

24-Parganas.—No. 150.—20th March 1937. —Babu Lakshmi Narayan Das, probationary Sub-Registrar attached to the Sadar Registration office at Alipore, 24-Parganas, is allowed leave on medical certificate for one month and one day, under rule 16 of the Bengal Services (Revision of Leave) Rules, 1934, in extension of the leave granted to him in this department notification No. 90, dated the 26th February 1937.

Midnapore-Nadia.—No. 151.—22nd March 1937.—Babu Paresh Chandra Mazumdar, formerly Sub-Registrar of Ramnagar, in the district of Midnapore, now Sub-Registrar of Mirpur, in the district of Nadia, was on leave on average pay for two months and thirty days, under rule 81 (*b*) (*ii*) of the Fundamental Rules, with effect from the 25th November 1936.

This cancels this department notification No. 642, dated the 17th November 1936, granting leave on average pay for four months to the Sub-Registrar.

Mymensingh.—No. 152.—22nd March 1937.—Maulvi Quazi Abdul Majid, Sub-Registrar of Phulbaria, in the district of Mymensingh, is allowed leave on average pay for two months, under rule 81 (*b*) (*ii*) of the Fundamental Rules, with effect from the 30th March 1937.

Mymensingh.—No. 153.—22nd March 1937. —Maulvi Tajhibuddin Ahmed, 3rd Joint Sub-Registrar of Sherpur at Bakshiganj, in the district of Mymensingh, is appointed to act as Sub-Registrar of Phulbaria in the same district, with effect from the 30th March 1937, during the absence, on leave, of Maulvi Quazi Abdul Majid, Sub-Registrar, or until further orders.

Dacca-Mymensingh. — No. 154. — 22nd March 1937.—Babu Rajendra Kumar Das, probationary Sub-Registrar attached to the Sadar Registration office at Dacca, is appointed to act as 3rd Joint Sub-Registrar of Sherpur at Bakshiganj, in the district of Mymensingh, with effect from the 30th March 1937, or any subsequent date on which he joins the appointment, during the absence, on deputation, of Maulvi Tajhibuddin Ahmed, Sub-Registrar, or until further orders.

Dinajpur.—No. 155.—22nd March 1937.— Babu Ramesh Chandra Ghosh, Sub-Registrar of Phulbari, in the district of Dinajpur, is allowed leave on average pay for three months, under rule 81 (*b*) (*ii*) of the Fundamental Rules, with effect from the date on which he may be relieved.

Dinajpur.—No. 156.—22nd March 1937.— Babu Ananda Mohan Ray, probationary Sub-Registrar of Dinajpur, is appointed to act as Sub-Registrar of Phulbari in the same district, during the absence, on leave, of the permanent incumbent, or until further orders.

Murshidabad. — No. 157. — 23rd March 1937.—Maulvi Md. Mazharul Huq, Sub-Registrar attached to the Sadar Registration office at Berhampore, Murshidabad, is allowed extraordinary leave without allowance for three months, under rule 85 (*a*) of the Fundamental Rules, in extension of the leave granted to him in this department notification No. 96, dated the 1st March 1937.

Burdwan-Murshidabad.—No. 158.—23rd March 1937.—Maulvi Muhammad Habiluddin, formerly Sub-Registrar of Ghuskara, in the district of Burdwan, now officiating Sub-Registrar of Lalbagh, in the district of Murshidabad, is allowed leave on average pay for six days, under rule 81 (*b*) (*ii*) of the Fundamental Rules, in extension of the leave granted to him in this department notification No. 105, dated the 2nd March 1937.

S. CHATTERJEA,
Inspector-General of Regn., Bengal.

FINANCE DEPARTMENT.

Audit.

NOTIFICATIONS.

No. 2986F.—25th March 1937.—In exercise of the powers conferred by rules 41, 42 and 44 of the Civil Services (Classification, Control and Appeal) Rules and with the previous sanction of the Governor-General in Council as required by rule 11 of those rules, the Governor in Council and acting with his Ministers is pleased to direct that the following amendment shall be made in the General Provident Fund (Bengal Services) Rules, namely:—

At the end of rule 8 of the said rules, the following note shall be inserted, namely:—

"*Note.*—In order to secure the protection given to and the force conferred on a nomination by section 5(*1*) of the Provident Funds Act, 1925, a nomination must not only be in accordance with the rules as they stand when it is made but it must also continue to be in accordance with the rules as they stand amended or altered from time to time."

No. 3108F.—25th March 1937.—In exercise of the powers conferred by rules 41, 42 and 44 of the Civil Services (Classification, Control and Appeal) Rules and with the previous sanction of the Governor-General in Council as required by rule 11 of those rules, the Governor in Council and acting with his Ministers is pleased to direct that the following amendment shall be made in the Contributory Provident Fund Rules (Bengal), namely:—

At the end of rule 5 of the said rules, the following note shall be inserted, namely:—

"*Note.*—In order to secure the protection given to and the force conferred on a nomination by section 5(*1*) of the Provident Funds Act, 1925, a nomination must not only be in accordance with the rules as they stand when it is made but it must also continue to be in accordance with the rules as they stand amended or altered from time to time."

D. GLADDING,

Secy. to the Govt. of Bengal.

COMMERCE DEPARTMENT.

NOTIFICATIONS.

No. 3217Com.—22nd March 1937.—In exercise of the powers conferred by sub-section (*4*) of section 4 of the Bengal Smoke-nuisances Act, 1905 (Bengal Act III of 1905), the Governor in Council is pleased to appoint Mr. R. J. Oliver of Messrs. Martin & Co., Calcutta, and Mr. D. Peters, Manager, Lansdowne Jute Mills, who have been nominated by the Bengal Chamber of Commerce, to be members of Bengal Smoke-nuisances Commission as constituted under this Government notification No. 4233Com., dated the 19th June 1936, *vice* Messrs. C. A. John Hendry and G. Y. Robertson, resigned.

No. 3230Com.—22nd March 1937.—Mr. H. Myers, Electric Inspector, Bengal, is allowed leave for one day, the 25th March 1937, under rule 10 of the Bengal Services (Revision of Leave) Rules, 1934.

D. GLADDING,

Secy. to the Govt. of Bengal.

MARINE DEPARTMENT.

NOTIFICATION.

No. 12Mne.—19th March 1937.—Mr. R. W. Garreau, Inspector of Boilers, Bengal, is appointed to act as Engineer Superintendent, Government Dockyard, Narayanganj, with effect from the 12th April 1937, or any subsequent date on which he takes charge, *vice* Mr. R. S. Lawrenson, Inspector of Boilers, Bengal, whose services are replaced at the disposal of the Commerce Department of this Government.

D. GLADDING,

Secy. to the Govt. of Bengal.

PUBLIC WORKS DEPARTMENT.

Establishment.

NOTIFICATIONS.

Minister-in-charge: The Hon'ble Nawab Sir Mohiuddin Faroqui, Kt., of Ratanpur.

No. 12.—16th March 1937.—Rai Sahib Manmohan Sen Gupta, officiating Superintending Engineer, Eastern Circle, is granted, under rule 81 (*b*) (*ii*) of the Fundamental Rules, leave on average pay preparatory to retirement with effect from the 25th March 1937 or any subsequent date of relief up to the 15th July 1937, inclusive.

No. 13.—16th March 1937.—Mr. F. H. Hogshaw, Executive Engineer, on leave, is transferred, in the interest of the public service, to the Eastern Circle and appointed to officiate as Superintending Engineer of that circle until further orders, *vice* Rai Sahib M. Sen Gupta, officiating Superintending Engineer, granted leave.

No. 14.—22nd March 1937.—In exercise of the powers conferred by the Provincial Services Recruitment Rules published under the Appointment Department notification No. 7183A., dated the 22nd May 1930, as amended from time to time, the Government of Bengal (Ministry of Public Works) are pleased to appoint the following candidates as Assistant Engineers in the Bengal Engineering Service (Roads and Buildings) by direct recruitment:—

(1) Babu Ranajit Prasad Chanda, B.E., son of Rai Bahadur Ramaprasad Chanda.

(2) Babu Jamini Kumar Banerjee, B.E., son of Babu Monindra Chandra Banerjee.

They will be on probation for two years.

2. Until further orders No. 1 is posted to the Suburban Division of the Presidency Circle and No. 2 to the Eastern Circle.

No. 15.—22nd March 1937.—In exercise of the powers conferred by the Provincial Services Recruitment Rules published under the Appointment Department notification No. 7183A., dated the 22nd May 1930, as amended from time to time, the Government of Bengal (Ministry of Public Works) are pleased to appoint the following candidate as an Assistant Engineer in the Bengal Engineering Service (Roads and Buildings) by direct recruitment:—

Maulvi Md. Abdul Jabbar, B.Sc., B.E., son of Maulvi Fal Muhammed Sarkar.

2. Maulvi Md. Abdul Jabbar, who holds a permanent appointment in the Bengal Educational Service as lecturer in Civil Engineering in the Bengal Engineering College, Sibpur, is already employed in this

department as a temporary Assistant Engineer in the Jalpaiguri Division with a lien in his permanent appointment in the Education Department and his permanent appointment in this department will date from the 10th March 1937.

3. He will be on probation for two years in his appointment in the Public Works Department.

No. 16.—22nd March 1937.—In modification of this department notification No. 12, dated the 16th March 1937, Rai Sahib Manmohan Sen Gupta, officiating Superintending Engineer, Eastern Circle, is granted, under rule 81 (*b*) (*ii*) of the Fundamental Rules, leave on average pay preparatory to retirement with effect from the 22nd March 1937 or any subsequent date of relief up to the 15th July 1937, inclusive.

No. 17.—23rd March 1937.—Mr. W. J. Trusler, Executive Engineer, Workshops (Electrical) Division, is granted, under rule 81 (*b*) (*i*) of the Fundamental Rules, leave out of India on average pay for four months, with effect from the 4th April 1937, or any subsequent date on which he may avail himself of the leave.

2. This supersedes the order issued in this department notification No. 7, dated the 4th March 1937.

S. K. HALDAR,
Special Officer.

DEPARTMENT OF AGRICULTURE AND INDUSTRIES.

Industries.

NOTIFICATIONS.

Minister-in-charge: The Hon'ble Nawab Sir Mohiuddin Faroqui, Kt., of Ratanpur.

Hooghly.—No. 1878Ind.—19th March 1937.—Mr. B. C. Bhattacharya, Principal, Government Weaving Institute, Serampore, is allowed "earned leave" for one month (*i.e.*, for thirty-one days) from 15th March 1937, under rule 13 (*b*) of the Bengal Services (Revision of Leave) Rules, 1934.

Hooghly.—No. 1879Ind.—19th March 1937.—Mr. P. Pal, Dyeing Lecturer, Government Weaving Institute, Serampore, is appointed to act as the Principal of the Institute, during the absence, on leave, of Mr. B. C. Bhattacharya, or until further orders.

Veterinary.

NOTIFICATIONS.

Minister-in-charge: The Hon'ble Nawab Sir Mohiuddin Faroqui, Kt., of Ratanpur.

No. 1942Vety. — 22nd March 1937. — Mr. J. M. Lahiri, Vice-Principal, Bengal Veterinary College, is appointed to act as Principal of the College, during the absence, on leave, of Mr. A. D. MacGregor, or until further orders.

No. 1943Vety.—22nd March 1937. — Babu Sailendra Nath Singha, Lecturer, Bengal Veterinary College, is appointed to act as Vice-Principal of the College, *vice* Mr. J. M. Lahiri.

No. 1944Vety.—22nd March 1937. — Babu K. K. Banerjee, Laboratory Assistant, is appointed to act as Lecturer, Bengal Veterinary College, *vice* Babu Sailendra Nath Singha.

Miscellaneous.

NOTIFICATION.

Minister-in-charge: The Hon'ble Nawab Sir Mohiuddin Faroqui, Kt., of Ratanpur.

Calcutta.—No. 1952Misc.—22nd March 1937.—Maulvi Molla Abdul Majid, Assistant Secretary to the Government of Bengal, Department of Agriculture and Industries, is allowed leave on average pay for four days, under rule 81(*b*)(*ii*) of the Fundamental Rules, with effect from the 30th March 1937.

H. S. E. STEVENS,
Secy. to the Govt. of Bengal.

REVENUE DEPARTMENT.

Land Revenue.

NOTIFICATIONS.

Dacca-Malda-Mymensingh-Tippera-Noakhali-Faridpur - Howrah - Bakarganj - Midnapore-Rajshahi - Rangpur - Pabna - Bogra - Jalpaiguri-Dinajpur-Chittagong.—No. 6975L.R.—19th March 1937.—The candidates named below have been appointed to be Special Officers, Debt Conciliation Boards, and are posted to the districts noted against their names:—

1 Babu Nalini Mohan Gun—Dacca.
2 Babu Rajendra Lal Sarkar—Dacca.

3 Maulvi Syed Md. Hammad Ali—Dacca.

4 Babu Anil Kumar Das Gupta—Dacca.

5 Maulvi Zainal Abedin—Malda.

6 Maulvi Md. Idris Bhuia—Malda.

7 Maulvi Md. Harun Mallick—Mymensingh.

8 Maulvi Md. Habibur Rahman—Mymensingh.

9 Maulvi Md. Serajul Haque—Mymensingh.

10 Babu Bijay Krishna Basu—Mymensingh.

11 Babu Sachindra Mohan Bhattacharya—Mymensingh.

12 Babu Kshitis Chandra Ray—Mymensingh.

13 Maulvi Soleman Khondkar—Mymensingh.

14 Maulvi Md. Fazlul Bari—Tippera.

15 Maulvi Alimdad Khan—Tippera.

16 Babu Samarendra Nath Das Gupta—Tippera.

17 Babu Baidyanath Bhattacharya—Tippera.

18 Maulvi Mafizur Rahman—Noakhali.

19 Maulvi Md. Abdul Wahab—Noakhali.

20 Babu Dhirendra Nath Bandopadhyaya—Noakhali.

21 Babu Jyotirindu Das—Faridpur.

22 Maulvi Nazirulla Patwari—Faridpur.

23 Maulvi Kamrul Islam Md. Golam Robbany—Faridpur.

24 Maulvi Md. Jonab Ali—Faridpur.

25 Babu Abinas Chandra Chanda—Faridpur.

26 Maulvi Syed Solaiman Ali—Howrah.

27 Babu Gour Chandra Mallik—Howrah.

28 Babu Gurudas Ghosh—Bakarganj.

29 Babu Byomkesh Sarkar—Bakarganj.

30 Maulvi Zafaruddin Ahmed—Bakarganj.

31 Babu Hemanta Kumar Gautama—Bakarganj.

32 Maulvi Abu Nazem Nural Huda—Bakarganj.

33 Babu Pramatha Nath Bhattacharya—Bakarganj.

34 Maulvi Md. Mazammel Haque—Midnapore.

35 Babu Shiva Prasad Mustafi—Midnapore.

36 Babu Amarendra Nath Banerjee—Midnapore.

37 Babu Shyamapada Sen Gupta—Midnapore.

38 Babu Girindra Nath Mandal—Midnapore.

39 Maulvi A. F. M. Lutfar Rahman—Midnapore.

40 Maulvi Syed Matlub Ali—Midnapore.

41 Babu Ratnendra Nath Chaudhuri—Midnapore.

42 Maulvi Sajjad Ali—Rajshahi.

43 Babu Pratul Chandra Dutt—Rajshahi.

44 Maulvi Ahmed Subhan—Rajshahi.

45 Babu Preetilal Mukherjee—Rangpur.

46 Babu Bidyut Kumar Banerjee—Rangpur.

47 Maulvi Raquibul Haque—Rangpur.

48 Maulvi Syed Abed Mansur—Rangpur.

49 Babu Kedar Nath Chatterjee—Pabna.

50 Maulvi Abdur Rashid—Pabna.

51 Babu Indu Bhusan Sen Gupta—Bogra.

52 Maulvi Ahmed Sabahuddin Haider—Bogra.

53 Babu Narendra Nath Guha Thakurta—Jalpaiguri.

54 Maulvi Kazi Mafizuddin Ahmed—Jalpaiguri.

55 Babu Nikhileswar Bhattacharjee—Dinajpur.

56 Babu Anadi Charan Banerjee—Dinajpur.

57 Babu Nirmal Chandra Barua—Chittagong.

Midnapore.—No. 6978L.R. — 19th March 1937.—The retired officer named below has been appointed to be a Special Officer, Debt Conciliation Board, and is posted to the district noted against his name:—

Maulvi Gholam Akbar—Midnapore.

Dinajpur. —No. 7094L.R. — 20th March 1937.—Babu Sailendra Nath Mitra, Deputy Magistrate and Deputy Collector and Assistant Settlement Officer, Dinajpur, is allowed leave on average pay for eighteen days, under rule 81 (*b*) (*ii*) of the Fundamental Rules, with effect from the 30th March 1937.

This cancels this department notification No. 3483L.R., dated 17th February 1937.

Bakarganj. — No. 7564L.R.—25th March 1937.—Under the provisions of section 3(*14*) of the Bengal Tenancy Act, 1885 (Act VIII of 1885), Babu Prafulla Kumar Mukharji, Sub-Deputy Collector and Assistant Settlement Officer, Bakarganj, is authorised to discharge, in that district, the functions of a Revenue Officer, under Chapter X of that Act, so far as they relate to surveys and the preparation of record-of-rights.

He is also vested with the powers of an Assistant Settlement Officer, under Chapter VII, Part I, of the rules under the Bengal Tenancy Act, in respect of the aforesaid area.

Hooghly-Jessore.—No. 7339L.R.—23rd March 1937. — In exercise of the power conferred by sub-section (*3*) of section 1 of the Bengal Agricultural Debtors Act, 1935 (Bengal Act VII of 1936), the Governor in Council is pleased to direct that the said Act shall come into force in the undermentioned districts on the 15th April 1937:—

Hooghly.
Jessore.

Hooghly-24-Parganas-Jessore. — No. 7340L.R. — 23rd March 1937. —In exercise of the power conferred by sub-section (*1*) of section 39 of the Bengal Agricultural Debtors Act, 1935 (Bengal Act VII of 1936), the Governor in Council is pleased to authorise Collectors in the undermentioned districts to transfer from one Debt Settlement Board to another, for disposal, applications made under section 8 of the said Act:—

Hooghly.
24-Parganas.
Jessore.

Hooghly. — No. 7341L.R.—23rd March 1937.—In exercise of the power conferred by section 5 of the Bengal Agricultural Debtors Act, 1935 (Bengal Act VII of 1936), the Governor in Council is pleased to delegate to the Commissioner of the Burdwan Division his powers under sub-section (*2*) of section 3 and under section 4 of the said Act in regard to Debt Settlement Boards in the district of Hooghly.

24-Parganas-Jessore.—No. 7342L.R.—23rd March 1937.—In exercise of the power conferred by section 5 of the Bengal Agricultural Debtors Act, 1935 (Bengal Act VII of 1936), the Governor in Council is pleased to delegate to the Commissioner of the Presidency Division his powers under sub-section (*2*) of section 3 and under section 4 of the said Act in regard to Debt Settlement Boards in the districts of the 24-Parganas and Jessore.

Hooghly-24-Parganas-Jessore.—No. 7343L.R.—23rd March 1937.—In exercise of the power conferred by clause (*7*) of section 2 of the Bengal Agricultural Debtors Act, 1935 (Bengal Act VII of 1936), the Governor in Council is pleased to appoint the undermentioned officers, *ex-officio*, to exercise the powers of a Collector under sub-section (*1*) of section 39 of the said Act and under sub-rule (*2*) of rule 5, rule 6 and rule 49 of the Bengal Agricultural Debtors Rules, 1936, in regard to Debt Settlement Boards in their respective subdivisions:—

Hooghly district.

Subdivisional Magistrate of Sadar subdivision.
Subdivisional Magistrate of Serampore subdivision.
Subdivisional Magistrate of Arambagh subdivision.

24-Parganas district.

Subdivisional Magistrate of Sadar subdivision.
Subdivisional Magistrate of Diamond Harbour subdivision.
Subdivisional Magistrate of Barrackpore subdivision.
Subdivisional Magistrate of Barasat subdivision.
Subdivisional Magistrate of Basirhat subdivision.

Jessore district.

Subdivisional Magistrate of Sadar subdivision.
Subdivisional Magistrate of Magura subdivision.
Subdivisional Magistrate of Narail subdivision.
Subdivisional Magistrate of Bongaon subdivision.
Subdivisional Magistrate of Jhenida subdivision.

Rajshahi.—No. 7344L.R.—23rd March 1937.—In exercise of the power conferred by sub-section (*1*) of section 3 of the Bengal Agricultural-Debtors Act, 1935 (Bengal Act VII of 1936), and in partial modification of notification No. 11933L.R., dated 19th August 1936, sanctioning the establishment of the Gurudaspur Debt Settlement Board, published at page 2030 of Part I of the *Calcutta Gazette*, dated the 27th idem, the Governor in Council is pleased to declare the area for which the said Board is established to be the whole of Gurudaspur union.

Pabna.—No. 7345L.R.—23rd March 1937.—In exercise of the power conferred by sub-section (*1*) of section 3 of the Bengal Agricultural Debtors Act, 1935 (Bengal Act VII of 1936), the Governor in Council is pleased to establish the undermentioned Debt Settlement Boards in the Sirajganj subdivision of the Pabna district for the local areas respectively shown against each.

In exercise of the power conferred by sub-section (*1*) of section 40 of the said Act, read with rules 81 and 82 of the Bengal Agricultural Debtors Rules, 1936, the Governor in Council is pleased to appoint the Subdivisional Magistrate of Sirajganj, *ex-officio*, as Ordinary Appellate Officer and the senior munsif of Sirajganj, *ex-officio*, as Special Appellate Officer for each of the said local areas:—

Name of Debt Settlement Board.		Name of union comprising the local area.
Kaoakola	...	Kaoakola.
Kalia-Haripur	...	Kalia-Haripur.
Bagbari	...	Bagbari.
Ratankandi	...	Ratankandi.
Chhangachha	...	Chhangachha.
Natuarpara	...	Natuarpara.
Sonamukhi	...	Sonamukhi.
Maijbari	...	Maijbari.
Subhagachha	...	Subhagachha.
Rai-Daulatpur	...	Rai-Daulatpur.
Jhaul	...	Jhaul.
Bhadraghat	...	Bhadraghat.
Rupbati	...	Rupbati.
Gala	...	Gala.
Porjana	...	Porjana.
Beltail	...	Beltail.
Khukni	...	Khukni.
Kaijuri	...	Kaijuri.
Sonatani	...	Sonatani.
Sadia-Chandpur	...	Sadia-Chandpur.
Sthal	...	Sthal.
Ghorjan	...	Ghorjan.
Belkuchi	...	Belkuchi.
Ullapara	...	Ullapara.
Panchakrosi	...	Panchakrosi.
Purnimaganti	...	Purnimaganti.
Pangasi	...	Pangasi.
Saguna	..	Saguna.

Faridpur.—No. 7346L.R.—23rd March 1937. — In exercise of the power conferred by sub-section (*1*) of section 3 of the Bengal Agricultural Debtors Act, 1935 (Bengal Act VII of 1936), the Governor in Council is pleased to establish the undermentioned Debt Settlement Board in the Sadar subdivision of the Faridpur district for the local area shown against it.

In exercise of the power conferred by sub-section (*1*) of section 40 of the said Act, read with rules 81 and 82 of the Bengal Agricultural Debtors Rules, 1936, the Governor in Council is pleased to appoint the Subdivisional Magistrate of Sadar, *ex-officio*, as Ordinary Appellate Officer and the senior munsif of Sadar subdivision, *ex-officio*, as Special Appellate Officer for the said local area:—

Name of Debt Settlement Board.		Name of union comprising the local area.
Nagarkanda	...	Nagarkanda.

Bakarganj.—No. 7347L.R.—23rd March 1937.—In exercise of the power conferred by sub-section (*1*) of section 3 of the Bengal Agricultural Debtors Act, 1935 (Bengal Act VII of 1936), the Governor in Council is pleased to establish the undermentioned Debt Settlement Boards in the Patuakhali subdivision of the Bakarganj district for the local areas respectively shown against each.

In exercise of the power conferred by sub-section (*1*) of section 40 of the said Act, read with rules 81 and 82 of the Bengal Agricultural Debtors Rules, 1936, the Governor in Council is pleased to appoint the Subdivisional Magistrate of Patuakhali, *ex-officio*, as Ordinary Appellate Officer and the senior munsif of Patuakhali, *ex-officio*, as Special Appellate Officer for each of the said local areas:—

Name of Debt Settlement Board.		Name of union comprising the local area.
Ayla	...	Keorabunia.
Baragourichanna	...	Gourichanna.
Fuljhury	...	Badarkhali.
Kaunia	...	Bura Majumder.
Kanakdia	...	Kanakdia.
Madanpur	...	Madanpur.

Bakarganj.—No. 7348L.R.—23rd March 1937.—In exercise of the power conferred by sub-section (*1*) of section 3 of the Bengal Agricultural Debtors Act, 1935 (Bengal Act VII of 1936), the Governor in Council is pleased to establish the undermentioned Debt Settlement Boards in the Pirojpur subdivision of the Bakarganj district for the local areas respectively shown against each.

In exercise of the power conferred by sub-section (*1*) of section 40 of the said Act, read with rules 81 and 82 of the Bengal Agricultural Debtors Rules, 1936, the Governor in Council is pleased to appoint the Subdivisional Magistrate of Pirojpur, *ex-officio*, as Ordinary Appellate Officer and the senior munsif of Pirojpur, *ex-officio*, as Special Appellate Officer for each of the said local areas:—

Name of Debt Settlement Board.		Name of union comprising the local area.
Kadamtala	...	Kadamtala.
Sayna-Raghunathpur	...	Sayna-Raghunathpur.
Illuhar	...	Illuhar.
Salia-Bakpur	...	Salia-Bakpur.
Chakhar-Khalishakota	...	Chakhar-Khalishakota.
Matibhanga-Baniari	...	Matibhanga-Baniari.
Malikhali-Deulbari-Dobra	...	Malikhali-Deulbari-Dobra.

Land Acquisition.

NOTIFICATIONS.

Pabna.—No. 6983L.A.—19th March 1937.—Whereas it appears to the Governor in Council that land is likely to be required to be taken by Government at the expense of the Pabna Municipality for a public purpose, viz., for improving and widening Kailash Doctor Road in Ward No. II of Pabna Municipality, in the village of Dilalpur, jurisdiction list No. 110, thana Pabna, pargana Rokunpur, district Pabna, it is hereby notified that for the above purpose a piece of land comprising cadastral plot No. 781, and measuring, more or less, 0·0275 of an acre, is likely to be required within the aforesaid village of Dilalpur.

This notification is made, under the provisions of section 4 of Act I of 1894, to all whom it may concern.

A plan of the land may be inspected in the office of the Collector of Pabna.

In exercise of the powers conferred by the aforesaid section, the Governor in Council is pleased to authorise the officers for the time being engaged in the undertaking, with their servants and workmen, to enter upon and survey the land and do all other acts required or permitted by that section.

Any person interested in the above land, who has any objection to the acquisition thereof, may, within thirty days after the date on which public notice of the substance of this notification is given in the locality, file an objection in writing before the Collector of Pabna.

Chittagong.—No. 6992L.A. — 19th March 1937.—Whereas it appears to the Governor in Council that land is likely to be required to be taken by Government at the expense of the Paraikora union board for a public purpose, viz., for a public cremation ground in the village of Paraikora, police-station Anwara, zilla Chittagong, it is hereby notified that for the above purpose a piece of land comprising revisional survey plot No. 170, measuring, more or less, 0·14 acre, is likely to be required within the aforesaid village of Paraikora, police-station Anwara.

This notification is made, under the provisions of section 4 of Act I of 1894, to all whom it may concern.

A plan of the land may be inspected in the office of the Collector of Chittagong.

In exercise of the powers conferred by the aforesaid section, the Governor in Council is pleased to authorise the officers for the time being engaged in the undertaking, with their servants and workmen, to enter upon and survey the land and do all other acts required or permitted by that section.

Any person interested in the above land, who has any objection to the acquisition thereof, may, within thirty days after the date on which public notice of the substance of this notification is given in the locality, file an objection in writing before the Collector of Chittagong.

Calcutta.—No. 6995L.A.—19th March 1937. — Whereas it appears to the Governor in Council that land is likely to be required to be taken by Government at the expense of the Corporation of Calcutta for a public purpose, viz., for the extension of the Town High Level Sewer in wards Nos. 18 and 19 of the Calcutta Municipality in the city of Calcutta, it is hereby notified that for the above purpose nine pieces of land altogether measuring, more or less, 0·3760 of an acre, bounded on the—

Plot No. 1.

87, Chinghreeghata Road (portion).

On the North and South—Corporation land,
On the East—The remaining portion of premises No. 87, Chinghreeghata Road,
On the West—Hughes Road,

Plot No. 2.

86, Chinghreeghata Road (portion).

On the North and South—Corporation land,
On the East—The remaining portion of premises No. 86, Chinghreeghata Road,
On the West—Hughes Road,

Plot No. 3.

2, Hughes Road (portion).

On the North and South—Corporation land,
On the East—The remaining portion of premises No. 2, Hughes Road,
On the West—Hughes Road,

Plot No. 4.

4, Hughes Road (portion).

On the North—Corporation land,
On the East—The remaining portion of premises No. 4, Hughes Road,
On the South—Drain,
On the West—Hughes Road,

Plot No. 5.

69, Chinghreeghata Road (portion).

On the North—Drain,
On the East—The remaining portion of premises No. 69, Chinghreeghata Road,
On the South—Corporation land,
On the West—Hughes Road,

Plot No. 6.

39, Tangra Road (portion).

On the North—Tangra Road,
On the East—The remaining portion of premises No. 39, Tangra Road,
On the South—Corporation land,
On the West—Hughes Road,

Plot No. 7.

38, 38/1, Tangra Road (portion).

On the North—Corporation land,
On the East—The remaining portion of premises Nos. 38 and 38/1, Tangra Road,
On the South—Drain,
On the West—Hughes Road,

Plot No. 8.

8, Hughes Road (portion).

On the North and South—Corporation land,
On the East—The remaining portion of premises No. 8, Hughes Road,
On the West—Hughes Road,

Plot No. 9.

37, Tangra Road (portion).

On the North and South—Corporation land,
On the East—The remaining portion of premises No. 37, Tangra Road,
On the West—Hughes Road,

are likely to be required within the aforesaid wards of the Calcutta Municipality in the city of Calcutta.

This notification is made, under the provisions of section 4 of Act I of 1894, to all whom it may concern.

A plan of the land may be inspected in the office of the Second Land Acquisition Collector, 5, Bankshall Street, Calcutta.

In exercise of the powers conferred by the aforesaid section, the Governor in Council is pleased to authorise the officers of the time being engaged in the undertaking, with their servants and workmen, to enter upon and survey the land and do all other acts required or permitted by that section.

Any person interested in the above land, who has any objection to the acquisition thereof, may, within thirty days after the date on which public notice of the substance of this notification is given in the locality, file an objection in writing before the Second Land Acquisition Collector, 5, Bankshall Street, Calcutta.

Tippera.—No. 7082L.A.—20th March 1937.—The Governor in Council is pleased to cancel notification No. 37L.A., dated 2nd January 1936, under section 4 of the Land Acquisition Act, I of 1894, published at pages 71-72, Part I of the *Calcutta Gazette* of the 9th January 1936 in respect of the proposed acquisition of 0·176 of an acre of land required by the Chandpur Municipality for the construction of a free primary school for boys in Ward No. IV of the Chandpur Municpality in the district of Tippera.

Khulna.—No. 7088L.A.—20th March 1937.—Whereas it appears to the Governor in Council that land is likely to be required to be taken by Government at the expense of the Khulna Municipality for a public purpose, viz., for construction of the Jubilee Pox Isolation Ward in the village of Toothpara, jurisdiction list No. 4, thana Khulna, pargana Khalishpur, district Khulna, it is hereby notified that for the above purpose a piece of land comprising cadastral plots Nos. 1635, 1636 and 1637, and measuring, more or less, 0·33 of an acre, is likely to be required within the aforesaid village of Toothpara.

This notification is made, under the provisions of section 4 of Act I of 1894, to all whom it may concern.

A plan of the land may be inspected in the office of the Collector of Khulna.

In exercise of the powers conferred by the aforesaid section, the Governor in Council is pleased to authorise the officers for the time being engaged in the undertaking, with their servants and workmen, to enter upon and survey the land do all other acts required or permitted by that section.

Any person interested in the above land, who has any objection to the acquisition thereof, may, within thirty days after the date on which public notice of the substance of this notification is given in the locality, file an objection in writing before the Collector of Khulna.

24-Parganas.—No. 7091L.A. — 20th March 1937.—Whereas it appears to the Governor in Council that land is likely to be required to be taken by Government at the expense of the Calcutta Corporation for a public purpose, viz., for the Calcutta main drainage outfall channel to the Kulti river, in the villages of Dhapa, jurisdiction list No. 2, Dhapamanpur, jurisdiction list No. 1, Hadia, jurisdiction list No. 5, Tardahakapasati, jurisdiction list No. 38, Gangapur, jurisdiction list No. 35, Karaidanga, jurisdiction list No. 32, Bhatipota, jurisdiction list No. 33, Krolbaria, jurisdiction list No. 31, Ghunimeghi, jurisdiction list No. 44 and Dakhingazipur, jurisdiction list No. 43 of thanas Tollygunge and Bhangore, pargana Calcutta, district 24-Parganas, it is hereby notified that for the above purpose six pieces of land measuring, more or less, 773·56 acres excluding the Corporation land, Public Works Department land, graves and places of religious worship within the alignment commencing from 0 chainage which is at the centre of north abutment of the Suburban Sluice Bantola and proceeding generally towards north-east through villages Dhapa and Dhapamanpur up to chainage 2780, then turning towards south-east and proceeding through the villages Dhapamanpur, Hadia and Tardahakapasati up to chainage 22275, then turning towards north-east and proceeding through villages Tardahakapasati, Gangapur, Karaidanga and Bhatipota up to chainage 34320, and then turning towards south-east and proceeding through villages Bhatipota, Krolbaria, Ghunimeghi and Dakhingazipur, and ends at chainage 44460 at Ghunimeghi, varying in width from 600 feet to 1,000 feet and being 44,460 feet in length, are likely to be required within the aforesaid villages of Dhapa, Dhapamanpur, Hadia, Tardahakapasati, Gangapur, Karaidanga, Bhatipota, Krolbaria, Ghunemeghi and Dakhingazipur.

This notification is made, under the provisions of section 4 of Act I of 1894, to all whom it may concern.

A plan of the land may be inspected in the office of the Chief Engineer to the Corporation of Calcutta as well as in that of the Land Acquisition Officer, Alipore, 24-Parganas.

In exercise of the powers conferred by the aforesaid section, the Governor in Council is pleased to authorise the officers for the time being engaged in the undertaking, with their servants and workmen, to enter upon and survey the land and do all other acts required or permitted by that section.

Any person interested in the above land, who has any objection to the acquisition thereof, may, within thirty days after the date on which public notice of the substance of this notification is given in the locality, file an objection in writing before the Collector of 24-Parganas.

Rajshahi.—No. 7125L.A. — 20th March 1937.—Babu Subodh Chandra Basu, Subdivisional Officer, Nator, district Rajshahi, is vested with the powers of a Collector under the Land Acquisition Act, I of 1894, in that subdivision.

Tippera.—No. 7556L.A.—25th March 1937. —Whereas it appears to the Governor in Council that land is likely to be required to be taken by Government at the expense of the district board of Tippera, for a public purpose, viz., for Ramchandrapur-Brahmin Chapitala Road, in the village of Brahmin Chapitala, jurisdiction list No. 4, thana Muradnagar, pargana Bardakhat, zilla Tippera, it is hereby notified that for the above purpose a piece of land measuring, more or less, 2·22 acres, and comprising parts of cadastral survey plots Nos. 401, 402, 403, 404, 395, 405, 413, 414, 419, 420, 427, 428, 432, 434, 436, 441, 442, 444, 445, 446, 504, 505, 506, 508, 509, 511, 519, 520, 523, 525, 526, 527, 528, 662, 692, 694, 697 and 698, and cadastral survey plot No. 524, is likely to be required within the aforesaid village of Brahmin Chapitala:

This notification is made, under the provisions of section 4 of Act I of 1894, to all whom it may concern.

A plan of the land may be inspected in the office of the Collector of Tippera.

In exercise of the powers conferred by the aforesaid section, the Governor in Council is pleased to authorise the officers for the time being engaged in the undertaking, with their servants and workmen, to enter upon and survey the land and do all other acts required or permitted by that section.

Any person interested in the above land, who has any objection to the acquisition thereof, may, within thirty days after the date on which public notice of the substance of this notification is given in the locality, file an objection in writing before the Subdivisional Officer, Sadar, North, Comilla.

Burdwan. — No. 7559L.A. — 25th March 1937.—Mr. Viresh Chandra Datta, Subdivisional Officer, Kalna, district Burdwan, is vested with the powers of a Collector under the Land Acquisition Act, I of 1894, in that subdivision,

Tippera.—No. 7561L.A.—25th March 1937. —Whereas it appears to the Governor in Council that land is likely to be required to be taken by Government at the expense of the Chandpur Municipality for a public purpose, viz., for a free primary school for boys in Ward No. IV of the Chandpur Municipality, in the village of Chandpur Municipality, jurisdiction list No. 91, thana Chandpur, pargana Purchandi, district Tippera, it is hereby notified that for the above purpose a piece of land comprising cadastral plots Nos. 417 and 3119, and measuring, more or less, 0·31 of an acre, is likely to be required within the aforesaid village of Chandpur Municipality.

This notification is made, under the provisions of section 4 of Act I of 1894, to all whom it may concern.

A plan of the land may be inspected in the office of the Subdivisional Officer, Chandpur.

In exercise of the powers conferred by the aforesaid section, the Governor in Council is pleased to authorise the officers for the time being engaged in the undertaking, with their servants and workmen, to enter upon and survey the land and do all other acts required or permitted by that section.

Any person interested in the above land, who has any objection to the acquisition thereof, may, within thirty days after the date on which public notice of the substance of this notification is given in the locality, file an objection in writing before the Subdivisional Officer, Chandpur.

Tippera.—No. 7567L.A.—25th March 1937. —The Governor in Council is pleased to cancel the notification No. 3496L.A., dated 29th February 1936, under section 4 of the Land Acquisition Act, I of 1894, published at page 484, Part I of the *Calcutta Gazette* of the 5th March 1936, in respect of the proposed acquisition of 1·75 acres of land required by the district board of Tippera for extension of Mehar Suchipara Road from Suchipara village to the bank of the river Dakatia in the village of Chandpur, jurisdiction list No. 395, thana Hajiganj, pargana Tora, district Tippera.

Tippera.—No. 7570L.A.—25th March 1937. —Whereas it appears to the Governor in Council that land is likely to be required to be taken by Government at the expense of the District Board of Tippera for a public purpose, viz., for extension of Mehar-Suchipara Road from Suchipara village to the bank

of the river Dakatia, in the village of Chandpur, jurisdiction list No. 395, thana Hajiganj, pargana Tora, district Tippera, it is hereby notified that for the above purpose a piece of land comprising cadastral survey plot No. 507 and parts of cadastral survey plot Nos. 503, 504, 506, 508, 515, 516, 664, 665, 518, 519, 521, 527 and 577, and measuring, more or less, 1·766 acres, is likely to be required within the aforesaid village of Chandpur.

This notification is made, under the provisions of section 4 of Act I of 1894, to all whom it may concern.

A plan of the land may be inspected in the office of the Subdivisional Officer of Chandpur.

In exercise of the powers conferred by the aforesaid section, the Governor in Council is pleased to authorise the officers for the time being engaged in the undertaking, with their servants and workmen, to enter upon and survey the land and do all other acts required or permitted by that section.

Any person interested in the above land, who has any objection to the acquisition thereof, may, within thirty days after the date on which public notice of the substance of this notification is given in the locality, file an objection in writing before the Land Acquisition Collector of Chandpur.

DECLARATIONS.

Pabna.—No. 6986L.A.—19th March 1937.—Whereas it appears to the Governor in Council that land is required to be taken by Government at the expense of the Sirajganj Municipality for a public purpose, viz., for the extension of the Hossenpur Burial Ground in the village of Raypur, jurisdiction list No. 190, in thana Sirajganj, pargana Barabaju, district Pabna, it is hereby declared that for the above purpose a piece of land comprising cadastral plot No. 962 and part of cadastral plots Nos. 959, 960 and 961, and measuring, more or less, 0·68 of an acre, is required within the aforesaid village of Raypur.

This declaration is made, under the provisions of section 6 of Act I of 1894, to all whom it may concern.

A plan of the land may be inspected in the office of the Subdivisional Officer of Sirajganj.

Howrah.—No. 6998L.A.—19th March 1937.—Whereas it appears to the Governor in Council that land is required to be taken by Government at the expense of the Howrah Municipality for the public purpose, viz., for easing out a bad corner at Kashinath Chatterjee Lane in the village of Sibpur, pargana Paikan, zilla Howrah, it is hereby declared that for the above purpose a piece of land measuring, more or less, 0·0109 of an acre, bounded on the—

North and West—By Kashinath Chatterjee Lane,

South and East—By lands of Sashinath Chatterjee, Satish Chandra Chatterjee, Hiralal Chatterjee and others, and Kishori Mohan Ghosal,

is required within the aforesaid village of Sibpur.

This declaration is made, under the provisions of section 6 of Act I of 1894, to all whom it may concern.

A plan of the land may be inspected in the office of the Collector of Howrah.

Tippera.—No. 7085L.A.—20th March 1937.—Whereas it appears to the Governor in Council that land is required to be taken by Government at the expense of the Chandpur Municipality for a public purpose, viz., for the construction of a trenching ground and an approach road in the villages of Chandpur Municipality and Jafrabad, jurisdiction list Nos. 91 and 93, respectively, thana Chandpur, parganas Purchandi and Gunanandi, respectively, zilla Tippera, it is hereby declared that for the above purpose a piece of land comprising parts of cadastral plots Nos. 1504, 1505, 1506, 1507, 1296, 1508, 1294, 1295, 1293, 1301, 1300, 1304, 1306, 1307, 1333, 1308, 1312, 1314, 1315, 1316, 1318, 1319, 1320, 1321 and 1322 of Chandpur Municipality and parts of cadastral plots Nos. 666, 1180, 654, 651, 650, 647, 646, 648, 580, 581, 582, 583, 78, 79, 81, 83, 84, 1225, 1226, 85, 86, 87, 377, 1183, 1178, 372, 371, 1227, 366, 394, 395, 397, 399, 398, 400, 401, 407 and 396 of village Jafrabad, and measuring, more or less, 10·488 acres, is required within the aforesaid villages of Chandpur Municipality and Jafrabad.

This declaration is made, under the provisions of section 6 of Act I of 1894, to all whom it may concern.

A plan of the land may be inspected in the office of the Subdivisional Officer of Chandpur.

ERRATUM.

Jessore.—No. 6989L.A.—19th March 1937.—In declaration No. 16457L.A., dated the 1st December 1936, under section 6 of the Land Acquisition Act, published at pages 2797-98, Part I of the *Calcutta Gazette* of the 10th idem, in respect of the land required for widening the Satkhira-Navaran Road in the

villages of Burujbagan, etc., district Jessore, the following correction is made:—

In mauza Ulashi (jurisdiction list No. 101), sheet No. 3, *for* "part of cadastral survey plot No. 1440" *read* "part of cadastral survey plot No. 1490".

Cinchona.

NOTIFICATIONS.

No. 6789Cin. — 19th March 1937. — Mr. G. H. Fothergill, Assistant Manager, Government Cinchona Plantation, Bengal, now on deputation to the Government of India, Cinchona Plantation, Burma, is allowed leave on average pay, under rule 81 (*b*) (*i*) of the Fundamental Rules, for a period of eight months, with effect from the 1st April 1937, or any subsequent date on which he will be relieved of that duty and will revert to Bengal.

Darjeeling.—No. 7139Cin. — 22nd March 1937.—Notification No. 4568Cin., dated the 1st March 1937, granting leave on average pay for seven months, with effect from the 4th April 1937, to Mr. L. G. Richards, Assistant Manager, Government Cinchona Plantation, Mungpoo, is cancelled.

J. B. KINDERSLEY,
Secy. to the Govt. of Bengal (offg.).

Miscellaneous.

RESOLUTION—No. 4787Misc.

Calcutta, the 3rd March 1937.

In 1934, the Governor in Council accepted the recommendation of the special committee appointed to examine the future administration of the district of Noakhali that the headquarters of the district should be moved to Maijdi. The move was, however, postponed as the conditions at Noakhali appeared to be improving and it was hoped that it might be unnecessary to move the headquarters of the district. Although there are indications that the main stream of the Meghna has temporarily ceased to be so active in the immediate vicinity of the town, conditions during high tides, when the town is inundated, are, in the opinion of the Governor in Council, such that it is necessary that effect should now be given to the previous decision to move the headquarters of the district, and he has decided that Maijdi shall be declared immediately the permanent headquarters of the Noakhali district, and that steps are to be taken to remove the headquarters to that place at an early date.

Ordered that a copy of this resolution be published in the *Calcutta Gazette* for general information.

By order the Govenor in Council,

J. B. KINDERSLEY,
Secy. to the Govt. of Bengal (offg.).

Forests.

NOTIFICATIONS.

Darjeeling.—No. 7545For.—25th March 1937.—In exercise of the powers conferred by section 20 of the Indian Forest Act, 1927 (XVI of 1927), the Governor in Council is pleased to declare that the boundaries of the forests reserved under notification No. nil, dated the 10th March 1886, as the Rinchintongdara forests are as follows :—

(The magnetic bearings have been corrected to the true meridian.)

(The distances have been measured horizontally and given in Gunter's chains and links.)

1. *Rinchintongdara (North).*—Pillar A is above the Darjeeling Hill cart road at a point about half a mile from Sonada towards Tung along the cart road. It is 17 chains 23 links along that road from Railway mile post No. 41 measured towards Tung and is on the right bank of Golkothi Jhora :—

From pillar.	Description.	To pillar.	Lands marching with the Reserve.
A	up the Golkothi Jhora for 8 chains 78 links ..	B	Burdwan Raj Estate.
B	bearing 146°15′ for 4 chains 71 links ..	C	
C	,, 149°45′ for 9 chains 10 links ..	D	
D	,, 144°45′ for 2 chains 61 links ..	E	
E	,, 157°0′ for 2 chains 61 links ..	F	
F	,, 137°45′ for 2 chains 17 links ..	G	
G	down the Batasi Jhora for 9 chains 30 links ..	H	

(Pillar H is on the eastern edge of the Cart Road.)

Then from H along the cart road towards Sonoda to pillar A.

2. *Rinchintongdara (South)*.—Pillar A is above the Darjeeling Hill cart road at a point which is 9 chains 67 links from Railway mile post 40 measured towards Sonada :—

From pillar.	Description.	To pillar.	Lands marching with the Reserve.
A	bearing 22°45′ for 6 chains 53 links ..	B	Burdwan Raj Estate.
B	,, 11°45′ for 3 chains 5 links ..	C	
C	,, 287°0′ for 3 chains 45 links ..	D	
D	,, 71°30′ for 1 chain 11 links ..	E	
E	,, 73°0′ for 6 chains 84 links ..	F	
F	,, 76°45′ for 3 chains 40 links ..	G	
G	,, 82°30′ for 2 chains 26 links ..	H	
H	,, 74°30′ for 1 chain 57 links ..	I	
I	,, 96°45′ for 1 chain 20 links ..	J	
J	,, 77°0′ for 5 chains 19 links ..	K	
K	,, 56°30′ for 2 chains 90 links ..	L	
L	,, 86°30′ for 3 chains 23 links ..	M	
M	,, 67°45′ for 2 chains 57 links ..	N	
N	,, 73°0′ for 4 chains 15 links ..	O	
O	,, 93°30′ for 4 chains 90 links ..	P	
P	,, 123°0′ for 1 chain 78 links ..	Q	
Q	,, 115°15′ for 5 chains 83 links ..	R	
R	,, 132°30′ for 2 chains 98 links ..	S	
S	down "8th mile jhora" for 10 chains 82 links ..	T	

(Pillar T is at the junction of 8th mile jhora and Cart Road.) Then from T along the Cart road towards Sonada to pillar A.

No. 7118For.—25th March 1937.—Under provisions of section 4 of the Indian Forest Act, 1927 (Act XVI of 1927), the Governor in Council declares that it is proposed to constitute a reserved forest the land situated within the boundaries described below :—

District.	Subdivision.	Name of forests.	Approximate area in acres.	Description of boundaries.
Jalpaiguri ..	Alipur-Duar ..	North Barājhār extension reserve.	100·91	(1) Khās plots Nos. 10K/7 and 10K/1. North—Jote No. 3165. West, South and East—Malangi river. (2) Khās plots Nos. 10K/5, 10K/8, 10K/9, 10K/10, 10K/11, 10K/12, 10K/14 and Jote No. 798. North—A demarcated line commencing from the north-west corner of Khās plot No. 10K/9 at the bank of Malangi river and running at an easterly direction, then running at a south-easterly and then at an easterly direction along the western and southern boundary of Jote No. 3205 and at an easterly direction along the southern boundary of plot No. 10K/3. West and South—Malangi river. East—A demarcated line.

The Governor in Council is pleased to appoint the Deputy Commissioner of Jalpaiguri to be the Forest Settlement Officer, who will under the provisions of Chapter II of the Indian Forest Act, enquire into and determine the existence, nature and extent of any rights alleged to exist in favour of any person in or over any land comprised within the boundaries specified above.

The Governor in Council is also pleased, under section 17 of the Indian Forest Act, to appoint the Commissioner of Rajshahi Division to hear appeals from the decisions of the Forest Settlement Officer as above appointed.

Darjeeling.—No. 7549For. -25th March 1937.—In exercise of the powers conferred by section 20 of the Indian Forest Act, 1927 (XVI of 1927), the Governor in Council is pleased to declare that the forest within the boundary marks described below and situated within the district of Darjeeling, which forms part of the forests previously notified as Reserved Forests under notification No. nil, dated the 23rd January 1879, as subsequently amended by notification No. 4483For., dated the 21st June 1923, and under notifications No. nil, dated the 25th March 1881, No. 4031For., dated the 22nd August 1895, No. 6456For., dated the 7th July 1922, No. 868For., dated the 23rd January 1924, No 267T.R., dated the 9th June 1924, No. 7013For., dated the 14th August 1924, and No. 402T.R., dated the 26th September 1928, shall be known as the Senchal-Takdah Reserved Forest :—

Boundaries.

From Pillar No.	Description.	To Pillar No.	Remarks	Lands marching with the Reserve.
515	bearing 108°0′ for 2 chains 61 links	516	Crosses Darjeeling Hill Cart Road at 0 chain 65 links and old Military Road at 2 chains 41 links	Darjeeling Municipality.
516	,, 92°45′ for 2 chains 25 links	517		
517	,, 103°45′ for 3 chains 86 links	518	On western side of P. W. D. Senchal Road	
518	down Senchal Road for 7 chains 62 links	519	Which is 0 chain 22 links north of the centre of the road.	
519	bearing 3°45′ for 2 chains 77 links	520		
520	,, 17°15′ for 2 chains 37 links	521		
521	,, 16°15′ for 1 chain 38 links	522		
522	,, 308°45′ for 0 chain 30 links	523		
523	,, 304°0′ for 2 chains 41 links	524		
524	,, 307°30′ for 2 chains 50 links	525		
525	,, 8°0′ for 2 chains 50 links	526	On the north side of the Peshoke Road.	
526	along Peshoke Road towards Jorebungalow for 8 chains 41 links to Pillar No. 1.			

Note.—Situated within the boundaries described above is a plot of land near Senchal dak bungalow leased to the Maharajadhiraja Bahadur of Burdwan, which is not Reserved Forest The boundaries of this plot are described below :—

From Pillar No.	bearing in degrees.	Distance in chains and links.		To Pillar No.
1	90°15′	1	9	2
2	85°30′	0	27	3
3	76°0′	0	32	4
4	61°15′	0	42	5
5	87°45′	0	35	6
6	111°45′	0	19	7
7	119°0′	0	22	8
8	122°30′	1	20	9
9	204°15′	0	64	10
10	104°45′	0	62	11
11	214°30′	1	32	12
12	308°0′	0	91	13
13	203°45′	0	58	14
14	300°30′	0	61	15
15	303°45′	2	11	1

Calcutta.—No. 7553For.—25th March 1937.—The Governor in Council is pleased to sanction, with effect from the 1st April 1937, the formation of a Utilisation Division under the Forest Department in Bengal with headquarters at Calcutta.

2 The Utilisation Division will comprise all the areas within the jurisdiction of the Northern and Southern Forest Circles in the Presidency sanctioned under Government notification No. 16757For., dated the 24th November 1927.

Excise.

NOTIFICATIONS.

Minister-in-charge: The Hon'ble Sir Bijoy Prasad Singh Roy, Kt.

No. 6488Ex.—17th March 1937.—In exercise of the power conferred by section 27 of the Bengal Excise Act, 1909 (Bengal Act V of 1909), the Government of Bengal (Ministry of Excise) are pleased to make, with effect from the 1st April 1937, the following amendment in notification No. 596S.R., dated the 30th March 1915, published at pages 562-578, Part I of the *Calcutta Gazette* of the 31st idem, as subsequently amended, viz. :—

In paragraph 31 of the said notification for "Rupees seventy-three" as the rate of duty on charas per seer *substitute* "Rupees sixty-eight".

No. 6917Ex.—19th March 1937.—In exercise of the power conferred by section 27 of the Bengal Excise Act, 1909 (Bengal Act V of 1909) the Government of Bengal (Ministry of Excise) are pleased to direct that for paragraph 26 of notification No. 596S.R., dated the 30th March 1915, as subsequently amended, the following be substituted, namely :—

"26. Duty is imposed on country spirit at the rates respectively specified below as an experimental measure for a further period of six months with effect from 1st March 1937 or until further orders.

(*a*) When transported from any distillery or excise warehouse in Bengal to the premises of a licensed retail vendor—

Area.	Rates of duty per Imperial gallon of the strength of—						
	25°U.P.	30°U.P.	40°U.P.	55°U.P.	60°U.P.	70°U.P.	75°U.P.
	Rs. a. p.	Rs. a. p.	Rs. a. p.	Rs. a. p.	Rs. a. p.	Rs. a. p.	Rs. a. p.
Burdwan.							
Area supplied by Carew & Co.—Asansol subdivision only ..	..	6 6 0	..	..	2 3 9	..	..
Hooghly.							
Area supplied by D. Waldie & Co.—Industrial area. Thana Serampore exclusive of the villages of Khalsini, Nabagram, Jugipukur and Mankundu in the Bhadreswar outpost.	10 4 6	..	7 7 6	4 10 3	..	2 7 6	..
Howrah.							
Area supplied by D. Waldie & Co.—Industrial area. Thana Uluberia of Uluberia subdivision.	10 4 6	..	7 7 6	4 10 3	..	2 7 6	..
Area supplied by Haji Ismail Salt & Sons, Ltd.—Industrial area. Sadar subdivision and thana Bauria of Uluberia subdivision.	10 8 0	..	7 10 3	4 12 3	..	2 8 9	..
24-Parganas.							
Area supplied by Haji Ismail Salt & Sons., Ltd.—Industrial area. Thanas Metiabruz, Mahesh tola, Behala, Tollygunge and Budge Budge in Sadar subdivision.	10 8 0	..	7 10 3	4 12 3	..	2 8 9	..
Area supplied by D. Waldie & Co.—Industrial area. Barrackpore subdivision.	10 4 6	..	7 7 6	4 10 3	..	2 7 6	..
Calcutta.							
Whole district supplied by Haji Ismail Salt & Sons, Ltd. ..	10 8 0	..	7 10 3	4 12 3	..	2 8 9	..
Jalpaiguri.							
Whole district supplied by Carew & Co., except as shown below	..	6 6 0	..	..	2 3 9	..	..
Area served by all shops in Jalpaiguri district on the east side of the Teesta, including the three shops in British Chit belonging to Jalpaiguri and bounded on all sides by Cooch Behar boundary and the area served by Tentulia shop on the west of the Teesta.	..	6 6 0	..	..	2 3 9	..	0 11 6
Darjeeling.							
Whole district supplied by Carew & Co., except as shown below	..	6 6 0	..	..	2 3 9	..	0 13 3
Area served by shops at Singla, Ladoma, Sukiapukri, Mirik, Panighata, Naxalbari, Khoribari, Phansidewa, Teesta Bridge, Kalimpong, Algarah (and at Pedang on hat days)—supplied by Carew & Co.	..	6 6 0	..	..	2 3 9	..	0 10 3

(*b*) When transported from a distillery or excise warehouse in Bengal to a distillery or excise warehouse at any place referred to in clause (*a*) above—The highest rate imposed by clause (*a*) above in any district through or into which the spirit passes.

(*c*) When manufactured in a distillery at any place in Bengal—The rate imposed by clause (*a*) above on transport to the premises of a licensed retail vendor in such place.

(*d*) When imported into any place referred to in clause (*a*) above—The highest rate imposed by clause (*a*) above in any district through or into which the spirit passes.

(*e*) When exported from Bengal to any place out of Bengal—The rate imposed under the law in force in such place on imports from Bengal."

No. 6920Ex.—19th March 1937.—In exercise of the power conferred by clause (2) of section 86 of the Bengal Excise Act, 1909 (Bengal Act V of 1909), the Government of Bengal (Ministry of Excise) are pleased to direct that, with effect from the 1st April 1937, country spirit shall be sold by the retail vendors thereof in the areas specified below at the strengths and at prices not in excess of or below those specified against each area, as an experimental measure for six months or until further orders :—

Area.	Fixed retail price per Imperial gallon of the strength of—		
	30° U. P.	60° U. P.	75° U. P.
	Rs. a. p.	Rs. a. p.	Rs. a. p.
Burdwan.			
(a) Area supplied by Carew & Co.—			
(1) Subdivision of Sadar (Burdwan)	10 6 9	5 3 0	1 15 3
(2) Asansol subdivision	..	..	1 15 3
(b) Area supplied by D. Waldie & Co.—Subdivisions of Katwa and Kalna	10 6 9	5 3 0	1 15 3
Birbhum.			
Whole district supplied by Carew & Co.	10 6 9	5 3 0	1 15 3
Bankura.			
Whole district supplied by Carew & Co., except areas shown below ..	10 6 9	5 3 0	1 15 3
The portion of the Chatna outpost of thana Bankura lying to the south-west of the Darakeswar river, thana Khatra, its outpost Indpur, thana Raipur and the Taldangra outpost of thana Onda—supplied by Carew & Co.	10 6 9	5 3 0	1 11 9
Midnapore.			
(a) Area supplied by Carew & Co.—Subdivisions of Sadar and Jhargram, subdivision of Contai except thana Bhagabanpur, Subdivision of Ghatal except thana Daspur.	10 6 9	5 3 0	1 11 9
(b) Area supplied by D. Waldie & Co.—Subdivision of Tamluk, thana Bhagabanpur in Contai subdivision and thana Daspur in Ghatal subdivision.	10 6 9	5 3 0	1 11 9
Hooghly.			
(a) Area supplied by Carew & Co.—Subdivision of Arambagh ..	10 6 9	5 3 0	1 15 3
(b) Area supplied by D. Waldie & Co.—Non-industrial area. Sadar subdivision and the villages of Khalsini, Nabagram, Jugipukur and Mankundu in the Bhadreswar outpost of Serampore subdivision.	10 6 9	5 3 0	1 15 3
Howrah.			
(a) Area supplied by Haji Ismail Sait & Sons—Non-industrial area. Thana Amta of Uluberia subdivision.	10 6 9	5 3 0	1 15 3
(b) Area supplied by D. Waldie & Co.—Non-industrial area. Uluberia subdivision except thana Amta and thana Uluberia.	10 6 9	5 3 0	1 15 3
24-Parganas.			
(a) Area supplied by Haji Ismail Sait & Sons—Non-industrial area. Sadar subdivision except thanas Metiabruz, Mahestala, Behala, Tollygunge and Budge Budge.	10 6 9	5 3 0	1 15 3
(b) Area supplied by D. Waldie & Co.—Non-industrial area. Subdivisions of Basirhat, Baraset and Diamond Harbour.	10 6 9	5 3 0	1 15 3
Nadia.			
Whole district supplied by D. Waldie & Co.	10 6 9	5 3 0	1 15 3
Murshidabad.			
Whole district supplied by D. Waldie & Co.	10 6 9	5 3 0	1 15 3

Area.	Fixed retail price per Imperial gallon of the strength of—		
	30° U. P.	60° U. P.	75° U. P.
	Rs. a. p.	Rs. a. p.	Rs. a. p.
Jessore.			
Whole district supplied by D. Waldie & Co.	10 6 9	5 3 0	1 15 3
Khulna.			
Whole district supplied by D. Waldie & Co.	10 6 9	5 3 0	1 15 3
Dacca.			
Whole district supplied by D. Waldie & Co.	10 6 9	5 3 0	..
Mymensingh.			
Whole district supplied by D. Waldie & Co.	10 6 9	5 3 0	..
Faridpur.			
Whole district supplied by Carew & Co.	10 6 9	5 3 0	..
Bakarganj.			
Whole district supplied by Carew & Co.	10 6 9	5 3 0	..
Chittagong.			
Whole district except as shown below supplied by Carew & Co. ..	10 6 9	5 3 0	..
Thana Fatikchari and part of thana Rungunia, bounded on the east, the north and part of the west by a line drawn from the junction of southern and western boundaries of Kaukhali village, proceeding northwards towards the Hill Tracts, passing through the eastern boundary of Pomara village and on the south of a line by a line drawn from the eastern boundary of the thana at the southern extremity of Dhopaghata village through the southern boundary of Sillock and Kaukhali villages—supplied by Carew & Co.	10 6 9	2 9 9	..
Noakhali.			
Whole district supplied by Carew & Co.	10 6 9	5 3 0	..
Tippera.			
(a) Area supplied by Carew & Co. Chandpur subdivision, Sadar subdivision and Brahmanbaria subdivision except area as shown in (b) below.	10 6 9	5 3 0	..
(b) Area supplied by D. Waldie & Co.—Thana Daudkandi in Sadar subdivision and thanas Nabinagar and Bancharampur in Brahmanbaria subdivision.	10 6 9	5 3 0	..
Rajshahi.			
Whole district supplied by Carew & Co.	10 6 9	5 3 0	..
Dinajpur.			
Whole district supplied by Carew & Co.	10 6 9	5 3 0	..
Rangpur.			
Whole district supplied by Carew & Co.	10 6 9	5 3 0	..
Bogra.			
Whole district supplied by Carew & Co.	10 6 9	5 3 0	..
Pabna.			
Whole district supplied by Carew & Co.	10 6 9	5 3 0	..
Malda.			
Whole district supplied by Carew & Co.	10 6 9	5 3 0	..

No. 6919Ex.—19th March 1937.—In exercise of the power conferred by section 27 of the Bengal Excise Act, 1909 (Bengal Act V of 1909), the Government of Bengal (Ministry of Excise) are pleased to direct that for paragraph 26 of notification No. 596S.R., dated the 30th March 1915, as subsequently amended, the following be substituted, namely :—

" 26. Duty is imposed on country spirit at the rates respectively specified below as an experimental measure for six months with effect from 1st April 1937 or until further orders.

(a) When transported from any distillery or excise warehouse in Bengal to the premises of a licensed retail vendor—

Area.	Rates of duty per Imperial gallon of the strength of—		
	30° U. P.	60° U. P.	75° U. P.
	Rs. a. p.	Rs. a. p.	Rs. a. p.
Burdwan.			
(a) Area supplied by Carew & Co.—			
(1) Subdivision of Sadar (Burdwan)	6 6 0	2 3 9	0 11 6
(2) Subdivision of Asansol	..	..	0 11 6
(b) Area supplied by D. Waldie & Co.—Subdivisions of Katwa and Kalna ..	6 3 9	2 2 9	0 10 9
Birbhum.			
Whole district supplied by Carew & Co.	6 6 0	2 3 9	0 11 6
Bankura.			
Whole district except as shown below supplied by Carew & Co. ..	6 6 0	2 3 9	0 11 6
The portion of the Chatna outpost of thana Bankura lying to the south-west of the Darkeswar river, thana Khatra, its outpost Indpur, thana Raipur and the Taldangra outpost of thana Onda.	6 6 0	2 3 9	0 8 3
Midnapore.			
(a) Area supplied by Carew & Co.—Subdivisions of Sadar and Jhargram, subdivision of Contai except thana Bhagabanpur, subdivision of Ghatal except thana Daspur.	6 6 0	2 3 9	0 8 3
(b) Area supplied by D. Waldie & Co.—Subdivision of Tamluk, thana Bhagabanpur in Contai subdivision and thana Daspur in Ghatal subdivision.	6 3 9	2 2 9	0 7 6
Hooghly.			
(a) Area supplied by Carew & Co.—Subdivision of Arambagh ..	6 6 0	2 3 9	0 11 6
(b) Area supplied by D. Waldie & Co.—Non-industrial area. Sadar subdivision and the villages of Khalsini, Nabagram, Jugipukur and Mankundu in the Bhadreswar outpost of Serampore subdivision.	6 3 9	2 2 9	0 10 9
Howrah.			
(a) Area supplied by Haji Ismail Sait & Sons—Non-industrial area. Thana Amta of Uluberia subdivision.	6 7 0	2 4 6	0 12 0
(b) Area supplied by D. Waldie & Co.—Non-industrial area. Uluberia subdivision except thanas Amta and Uluberia.	6 3 9	2 2 9	0 10 9
24-Parganas.			
(a) Area supplied by Haji Ismail Sait & Sons—Non-industrial area. Sadar subdivision except thanas Metiabruz, Mahestala, Behala, Tollygunge and Budge Budge.	6 7 0	2 4 6	0 12 0
(b) Area supplied by D. Waldie & Co.—Non-industrial area. Subdivisions of Basirhat, Baraset and Diamond Harbour.	6 3 9	2 2 9	0 10 9
Nadia.			
Whole district supplied by D. Waldie & Co.	6 3 9	2 2 9	0 10 9
Murshidabad.			
Whole district supplied by D. Waldie & Co.	6 3 9	2 2 9	0 10 9
Jessore.			
Whole district supplied by D. Waldie & Co.	6 3 9	2 2 9	0 10 9

Area.	Rates of duty per Imperial gallon of the strength of—		
	30° U. P.	60° U. P.	75° U. P.
	Rs. a. p.	Rs. a. p.	Rs. a. p.
Khulna.			
Whole district supplied by D. Waldie & Co.	6 3 9	2 2 9	0 10 9
Dacca.			
Whole district supplied by D. Waldie & Co.	6 3 9	2 2 9	..
Mymensingh.			
Whole district supplied by D. Waldie & Co.	6 3 9	2 2 9	..
Faridpur.			
Whole district supplied by Carew & Co.	6 6 0	2 3 9	..
Bakarganj.			
Whole district supplied by Carew & Co.	6 6 0	2 3 9	..
Chittagong.			
Whole district except as shown below supplied by Carew & Co. ..	6 6 0	2 3 9	..
Thana Fatikchari and part of thana Rungunia, bounded on the east, the north and part of the west by a line drawn from the junction of southern and western boundaries of Kaukhali village, proceeding northwards towards the Hill Tracts, passing through the eastern boundary of Pomara village and on the south by a line drawn from the eastern boundary of the thana at the southern extremity of Dhopaghata village through the southern boundary of Shillock and Kaukhali villages—supplied by Carew & Co.	6 6 0	0 8 6	..
Noakhali.			
Whole district supplied by Carew & Co.	6 6 0	2 3 9	..
Tippera.			
(*a*) Area supplied by Carew & Co.—Chandpur subdivision, Sadar subdivision and Brahmanbaria subdivision except area as shown in (*b*) below.	6 6 0	2 3 9	..
(*b*) Area supplied by D. Waldie & Co.—Thana Daudkandi in Sadar subdivision and thanas Nabinagar and Bancharampur in Brahmanbaria subdivision.	6 3 9	2 2 9	..
Rajshshi.			
Whole district supplied by Carew & Co.	6 6 0	2 3 9	..
Dinajpur.			
Whole district supplied by Carew & Co.	6 6 0	2 3 9	..
Rangpur.			
Whole district supplied by Carew & Co.	6 6 0	2 3 9	..
Bogra.			
Whole district supplied by Carew & Co.	6 6 0	2 3 9	..
Pabna.			
Whole district supplied by Carew & Co.	6 6 0	2 3 9	..
Malda.			
Whole district supplied by Carew & Co.	6 6 0	2 3 9	..

(*b*) When transported from a distillery or excise warehouse in Bengal to a distillery or excise warehouse at any place referred to in clause (*a*) above—The highest rate imposed by clause (*a*) above in any district through or into which the spirit passes.

(*c*) When manufactured in a distillery at any place in Bengal—The rate imposed by clause (*a*) above on transport to the premises of a licensed retail vendor in such place.

(*d*) When imported into any place referred to in clause (*a*) above—The highest rate imposed by clause (*a*) above in any district through or into which the spirit passes.

(*e*) When exported from Bengal to any place out of Bengal—The rate imposed under the law in force in such place on imports from Bengal."

No. 6918Ex.—19th March 1937.—In exercise of the power conferred by clause (2) of section 86 of the Bengal Excise Act, 1909 (Bengal Act V of 1909), the Government of Bengal (Ministry of Excise) are pleased to direct that, with effect from the 1st March 1937, country spirit shall be sold by the retail vendors

thereof in the areas specified below at the strengths and at prices not in excess of or below those specified against each area, as an experimental measure for a further period of six months or until further orders :—

Area.	Fixed retail price per Imperial gallon of the strength of -						
	25°U.P.	30°U.P.	40°U.P.	55°U.P.	60°U.P.	70°U.P.	75°U.P.
	Rs. a. p.	Rs. a. p.	Rs. a. p.	Rs. a. p.	Rs. a. p.	Rs. a. p.	Rs. a. p.
Burdwan.							
Area supplied by Carew & Co.—Asansol subdivision only ..	..	10 6 9	..	..	5 3 0	..	..
Hooghly.							
Area supplied by D. Waldie & Co.—Industrial area. Thana Serampore exclusive of the villages of Khalsini, Nabagram, Jugipukur and Mankundu in the Bhadreswar outpost.	15 10 0	..	11 12 0	8 4 0	..	4 12 0	..
Howrah.							
Area supplied by D. Waldie & Co.—Industrial area. Thana Uluberia of Uluberia subdivision.	15 10 0	..	11 12 0	8 4 0	..	4 12 0	..
Area supplied by Haji Ismail Salt & Sons, Ltd.—Industrial area. Sadar subdivision and thana Bauria of Uluberia subdivision.	15 10 0	..	11 12 0	8 4 0	..	4 12 0	..
24-Parganas.							
Area supplied by Haji Ismail Salt & Sons, Ltd.—Industrial area. Thanas Metiaburuz, Maheshtola, Behala, Tollygunge and Budge Budge in Sadar subdivision.	15 10 0	..	11 12 0	8 4 0	..	4 12 0	..
Area supplied by D. Waldie & Co.—Industrial area. Barrackpore subdivision.	15 10 0	..	11 12 0	8 4 0	..	4 12 0	..
Calcutta.							
Whole district supplied by Messrs. Haji Ismail Salt & Sons	15 10 0	..	11 12 0	8 4 0	..	4 12 0	..
Jalpaiguri.							
Whole district supplied by Carew & Co., except as shown below.	..	10 6 9	..	..	5 3 0	..	..
Area served by all shops in Jalpaiguri district on the east side of the Teesta including the three shops in British Chit belonging to Jalpaiguri and bounded by Cooch Behar boundary and the area served by Tontulia shop on the west of the Teesta.	..	10 6 9	..	..	5 3 0	..	1 15 3
Darjeeling.							
Whole district supplied by Carew & Co., except as shown below.	..	10 6 9	..	..	5 3 0	..	2 8 0
Area served by shops at Singla, Ladoma, Sukiapokri, Mirik, Panighata, Naxalbari, Khoribari, Phansidewa, Teesta Bridge, Kalimpong, Algarh (and at Pedang on hat days)—supplied by Carew & Co.	..	10 6 9	..	..	5 3 0	..	1 15 3

J. B. KINDERSLEY,
Secy. to the Govt. of Bengal (offg.).

BENGAL LEGISLATIVE COUNCIL DEPARTMENT.

NOTIFICATION.

No. 766L.C.—30th March, 1937.

Bengal Legislative Council.

Election by the members of the Bengal Legislative Assembly.

Notice in respect of the returns of election expenses published under the provisions of rule 9 of the Bengal Legislative Assembly and the Bengal Legislative Council Electoral (Election Expenses and Election Petitions) Rules, 1936.

	Name of the candidate.	Date on which the return of election expenses and the declarations have been lodged.
1.	Shams-ul-ulema Kamaluddin Ahmed	23rd March, 1937.
2.	Mr. Abdul Karim (Faridpur) ...	23rd March, 1937.
3.	Mr. Abdul Karim (Calcutta) ...	23rd March, 1937.
4.	Mr. S. M. Bose ...	23rd March, 1937.
5.	Dr. Radha Kumud Mookerjee ...	23rd March, 1937.
6.	Mr. Satyendra Chandra Mitra ...	23rd March, 1937.
7.	Seth Hanuman Prosad Poddar ...	23rd March, 1937.
8.	Mr. Muhammad Hossain (Calcutta)	23rd March, 1937.
9.	Mr. Shanti Shekhareswar Ray ...	23rd March, 1937.
10.	The Hon'ble Mr. Jagadish Chandra Banerjee ...	25th March, 1937.
11.	Mr. Naresh Nath Mookerjee ...	25th March, 1937.
12.	Rai Suk Lal Nag Bahadur ...	29th March, 1937.
13.	Khan Bahadur Haji Badi Ahmed Choudhury ...	30th March, 1937.

The returns can be inspected in the office of the Secretary to the Bengal Legislative Assembly, Council House, Calcutta, on any working

day between the hours of 11 a.m. and 3 p.m. on payment of the prescribed fee of Re. 1 only. Attested copies of the return or any part of it may be obtained from that office on payment of a fee of Rs. 2 only for each copy.

K. ALI AFZAL, *Returning Officer.*

SHERIFF'S OFFICE.

The 11th March 1937.

Notice is hereby given that the Second Criminal Sessions of the year 1937 of the High Court of Judicature at Fort William in Bengal for the town of Calcutta and Factory of Fort William and the places subordinate thereto, will be held at the Court House, in the town of Calcutta, on Monday, the 3rd day of May 1937, at 11 o'clock in the forenoon, and thenceforward from day to day until the said sessions be over. And it is hereby proclaimed that all persons who are to prosecute any of the prisoners to be brought up for trial at the said sessions be present then and there to prosecute.

S. C. LAW, *Sheriff.*

সরিফ আফিস, সন ১৯৩৭ সালের ১১ই মার্চ।

সকলকে সমাচার দেওয়া যাইতেছে যে, সুবে বাঙ্গালার ফোর্ট উইলিয়ম দুর্গের অধীনে সহর কলিকাতার ও অন্যান্য স্থানের ফৌজদারী বিচার নিষ্পত্তি জন্য আগামী সন ১৯৩৭ সালের ৩রা মে সোমবার বেলা ১১ ঘটিকার সময় এবং যে পর্য্যন্ত সেশিয়ানের কার্য্য সমাধা না হয়, প্রতিদিন উক্ত সময়ে কলিকাতার হাইকোর্টের আপন আদালত ঘরে সন ১৯৩৭ সালের দ্বিতীয় ক্রিমিন্যাল সেশিয়ান বসিবেক, এবং এতদ্বারা প্রচার করা যাইতেছে যে, যে সকল ব্যক্তি কোন কয়েদীর বিরুদ্ধে কোন ফৌজদারী মিছিল করিবেক, তাহারা উক্ত স্থানে উক্ত সময়ে হাজির থাকিয়া মোকদ্দমা করে। ইতি।

এস্, সি, লাহা,
সরিফ।

HIGH COURT NOTICES.

Original Side.

Calcutta, the 19th March 1937.

In modification of the order of the Hon'ble the Chief Justice, dated the 13th February 1937 (published in the *Gazette of India*, dated 20th February 1937, part II, page 168), His Lordship has been pleased to grant Mr. J. M. Ghose, Registrar-in-Insolvency, High Court, Original Side, privilege leave on full pay for one month and four days from 17th February 1937 to 20th March 1937, with liberty to affix Sunday and the High Court holidays from 21st March 1937 to 2nd April 1937 to his leave.

By order,
A. L. COLLET, *Registrar.*

Civil.

The 22nd March 1937.

No. 3795A.—Maulvi Shahabuddin Ahmad, munsif under orders of transfer to Gaibandha, in the district of Rangpur, is vested under section 19, sub-section (2) of the Bengal, Agra and Assam Civil Courts Act, 1887 (XII of 1887), as amended by the Decentralization Act, 1914 (IV of 1914), with powers to try, under the ordinary procedure, original suits up to the value of Rs. 2,000 arising within the local limits of the Gaibandha munsifi.

English Department.

The 25th March 1937.

No. 3886A.—Mr. S. N. Mitra, I.C.S., Joint Magistrate and Deputy Collector, who has been posted to the headquarters station of the Dacca district and who has been vested with the powers of a munsif, is vested with the powers of a Judge of a Court of Small Causes for the trial of suits cognizable by such a Court up to the value of Rs. 50 within the local limits of the Sadar munsifi of Dacca.

By order of the High Court,
N. L. HINDLEY, *Registrar (offg.).*

ORDERS BY COMMISSIONERS OF DIVISIONS.

Burdwan Division—Chinsura.

Erratum.—No. 907R.G.—19th March 1937.—In notification No. 12046L.R., dated 21st August 1936, published at page 2037, Part I of the *Calcutta Gazette*, dated 27th August 1936, *for* the words "Shampur Debt Settlement Board" *read* "Shanrpur Debt Settlement Board".

No. 365M.—20th March 1937.—It is hereby notified for general information that, under rule 20(*b*) of the rules for the management of charitable hospitals and dispensaries in Bengal, the following gentlemen have been appointed to be members of the committee for the management of the Charitable Dispensary at Ghatal in the district of Midnapore:—

Subdivisional Officer, Ghatal (*ex-officio*).
Assistant Surgeon, Ghatal (*ex-officio*).
Babu Atul Chandra Pain, Pleader and Chairman of Ghatal Municipality.
Babu Sudhir Chandra Pal, Muktear and Vice-Chairman of Ghatal Municipality.
Babu Harisadhan Nandigrami, merchant.
Babu Sitaram Kundu, merchant.
Babu Satyendra Kumar Roy, merchant.
Babu Parameswar Mandal, merchant.
Babu Sasadhar Chowdhury, medical practitioner.
Babu Charu Chandra Mallik, medical practitioner.
Babu Satyeswar Mandal, Head Master, local High English School.
Babu Srinibash Surekha, merchant and zamindar.

No. 380M.—20th March 1937.—In exercise of the power conferred by section 50 of the Bengal Municipal Act of 1932 (Act XV of 1932), it is hereby notified for general information that at the by-election of the Bansberia Municipality in the district of Hooghly, held on the 27th February 1937, Babu Shyama Charan Bandopadhya has been elected a Commissioner for Ward No. IV of that municipality in place of Babu Pulin Behary Dutta, deceased.

No. 1040J.G.—20th March 1937.—Maulvi Muhammad Ibrahim, Sub-Deputy Magistrate and Sub-Deputy Collector, Tamluk, district Midnapore, is granted, under rule 81 (*b*) (*ii*) of the Fundamental Rules, leave on average pay for the 25th March 1937 only.

No. 407M.—23rd March 1937.—In exercise of the power conferred by section 50 of the Bengal Municipal Act of 1932 (Bengal Act XV of 1932), it is hereby notified for general information that, at the general election of the Commissioners of the Vishnupur Municipality in the district of Bankura held on the 1st March 1937, the following gentlemen have been duly elected as Commissioners of that municipality:—

Ward A.

Babu Kali Pada Singha Thakur.
Babu Amulya Ratan Kabiraj.

Ward B.

Babu Ramsaran Mukhopadhya.
Babu Becharam Bhattacharji.
Babu Kripa Sindhu Khan.

Ward C.

Babu Bhubaneswar Kar.
Babu Gurudas Biswas.

Ward D.

Babu Hem Chandra Kar.
Babu Surendra Nath Bandopadhya.

No. 415M.—23rd March 1937.—In exercise of the power conferred by section 50 of the Bengal Municipal Act, 1932, it is hereby notified for general information that, at a by-election of the Howrah Municipality held on the 13th March 1937, Babu Susil K. Mukherjee has been duly elected as Commissioner for Ward No. VIII of that municipality, *vice* Sj. Bejoy Krishna Bhattacharya, resigned.

No. 1072J.G.—23rd March 1937.—In accordance with the provisions of rule 63 (*2*) of Chapter IV of the Bengal Jail Code, Volume I, I hereby re-appoint Miss Rachel C. Carr of Ushagram to be a non-official lady visitor of the Asansol Sub-Jail in the district of Burdwan for a period of two years with effect from the 11th April 1937.

O. M. MARTIN, *Commissioner (offg.).*

No. 1024E. — 19th March 1937. — It is hereby notified that Rai Satish Chandra Mukherji Bahadur, an accepted candidate for election from the Burdwan Division North-East General Constituency of the Bengal Legislative Council, has filed, on the 9th March 1937, his return of election expenses and the declarations in respect thereof, as required under sub-rules (*1*) and (*2*) of rule 7 of the Bengal Legislative Assembly and the Bengal Legislative Council Electoral (Election Expenses and Election Petitions) Rules, 1936. These can be inspected in the office of the Commissioner of the Burdwan Division, Chinsura, during office hours on payment of a fee of one rupee.

2. Any person may, on payment of a fee of Rs. 2 for each copy, obtain attested copies of the return or declaration or of any part thereof.

No. 1030E. — 19th March 1937. — It is hereby notified that Mr. Satyendra Chandra Ghosh Maulik, an accepted candidate for election from the Burdwan Division Landholders Constituency of the Bengal Legislative Assembly, has filed, on the 10th March 1937, his return of election expenses and the declarations in respect thereof, as required under sub-rules (*1*) and (*2*) of rule 7 of the Bengal Legislative Assembly and the Bengal Legislative Council Electoral (Election Expenses and Election Petitions) Rules, 1936. These can be inspected in the office of the Commissioner of the Burdwan Division, Chinsura, during office hours on payment of a fee of one rupee.

2. Any person may, on payment of a fee of Rs. 2 for each copy, obtain attested copies of the return or declaration or of any part thereof.

No. 1042E. — 19th March 1937. — It is hereby notified that Mr. Tulsi Chandra Goswami, an accepted candidate for election from the Burdwan Division North Municipal General Constituency of the Bengal Legislative Assembly, has filed, on the 9th March 1937, his return of election expenses and the declarations in respect thereof, as required under sub-rules (*1*) and (*2*) of rule 7 of the Bengal Legislative Assembly and the Bengal Legislative Council Electoral (Election Expenses and Election Petitions) Rules, 1936. These can be inspected in the office of the Commissioner of the Burdwan Division, Chinsura, during office hours on payment of a fee of one rupee.

2. Any person may, on payment of a fee of Rs. 2 for each copy, obtain attested copies of the return or declaration or of any part thereof.

O. M MARTIN, *Commissioner and Returning Officer.*

Suri, the 17th March 1937.

No. 12L.S.-G.—It is hereby notified for general information that, under section 13 of the Bengal Village Self-Government Act, 1919 (Bengal Act V of 1919), read with rule 36 of the rules for the election and appointment of members of union boards, etc., Munshi Shaik Alla Rakha has been appointed by me to be a member of the Parui union board in Sainthia police-station in the Sadar subdivision of the district of Birbhum, *vice* Munshi Abdul Sobhan, deceased.

No. 13L.S.-G.—It is hereby notified for general information that, under section 13 of the Bengal Village Self-Government Act, 1919 (Bengal Act V of 1919), read with rule 36 of the rules for the election and appointment of members of union boards, etc., Babu Charu Chandra Chatterji has been appointed by me to be a member of the Panchra union board in Khoyrasole police-station in the Sadar subdivision of the district of Birbhum, *vice* Babu Tarak Nath Chatterji, deceased.

No. 14L.S.-G.—It is hereby notified for general information that, under section 13 of the Bengal Village Self-Government Act, 1919 (Bengal Act V of 1919), read with rule 35 of the rules for the election and appointment of members of union boards, etc., Munshi Md. Taherjama Khan has been duly elected to be a member for Ward No. II of the Rajnagar union board in Rajnagar police-station in the Sadar subdivision of the district of Birbhum, *vice* Munshi Md. Sultan Alum Khan, deceased.

D. N. BANNERJI, for *District Magistrate.*

Chinsura, the 20th March 1937.

No. 2692J.G.—It is hereby notified for general information that, under section 13 of the Bengal Village Self-Government Act, 1919 (Bengal Act V of 1919), read with rule 36 of the rules for the election and appointment of members of union boards, etc., Babu Panchanan Mukherjee has been appointed to be a member of the Somra union board in police-station Balagar in the Sadar subdivision of the district of Hooghly, *vice* Dr. Satish Chandra Mallik, removed.

Chinsura, the 23rd March 1937.

No. 2806J.G.—It is hereby notified for general information that under rule 3 of the rules for the management of committee of Government high schools, Rai Sahib Phani Bhusan Mitra, Subdivisional Officer, Hooghly Sadar, is appointed a member of the managing committee of the Hooghly Collegiate School, as an officer other than the Inspecting Officers of the Education Department, for the unexpired period of the term of the committee, *vice* Babu S. K. Mazumdar, transferred from this district.

S. P. GHOSH, *District Magistrate.*

Burdwan, the 23rd March 1937.

Erratum.—In Part I of the *Calcutta Gazette*, dated 24th December 1936, page 2866-2871, conveying the names of members of union boards of Kalna subdivision, the following corrections are published:—

On page 2867, under Badla union board, *read* the name of Babu Sudhir Chandra Dey in "Ward II" and not "Ward I" and also *read* the name of Babu Satish Chandra Mondal in "Ward III" and not "Ward II" as published by notification No. 6031 J.L., dated 9th December 1936.

On page 2868, *for* "Babu Shyamapada Bhattacharjee" Purbasthali union board, Ward I, under notification No. 6033J.L., *read* "Babu Shyamaprosad Bhattacharjee."

On page 2869, *for* "Babu Taranath Mondal," Dogachia union board, Ward III, under notification No. 6033J.L., *read* "Babu, Tarak Nath Mondal."

On page 2869, *for* "Munshi Tejer Mondal," Mukshimpara union board, under notification No. 6034J.L., *read* "Munshi Tajer Mondal."

S. DUTT, *District Magistrate.*

Contai, the 9th March 1937.

Under rule 9 of the Bengal Legislative Assembly and the Bengal Legislative Council Electoral (Election Expenses and Election Petitions) Rules, 1936, it is hereby notified for the information of all those concerned that Babu Murari Mohon Ray, an unsuccessful candidate for the election from the Midnapore South-West General (Rural) Constituency of the Bengal Legislative Assembly, has filed on 9th March 1937 his return of election expenses and the declaration in respect thereof, as required under sub-rules (*1*) and (*2*) of rule 7 of the said rules. This return is open to inspection on payment of a fee of Re. 1 in the office of the Subdivisional Magistrate, Contai, between the hours of 11 a.m. and 3 p.m. for a week from the date of publication of this notice in the *Calcutta Gazette*, or from 25th March 1937, whichever is later.

Any person may, on payment of a fee of Rs. 2 for each copy, obtain attested copies of the return or declaration or of any part thereof.

B. G. RAO, *Returning Officer*

Contai, the 9th March 1937.

Under rule 9 of the Bengal Legislative Assembly and the Bengal Legislative Council Electoral (Election Expenses and Election Petitions) Rules, 1936, it is hereby notified for the information of all those concerned that Babu Biroja Charan Nanda, an unsuccessful candidate for the election from the Midnapore South-East General (Rural) Constituency of the Bengal Legislative Assembly, has filed on 9th March 1937 his return of election expenses and the declaration in respect thereof, as required under sub-rules (*1*) and (*2*) of rule 7

of the said rules. This return is open to inspection on payment of a fee of Re. 1 in the office of the Subdivisional Magistrate, Contai, between the hours of 11 a.m. and 3 p.m. for a week from the date of publication of this notice in the *Calcutta Gazette*, or from 25th March 1937, whichever is later.

Any person may, on payment of a fee of Rs. 2 for each copy, obtain attested copies of the return or declaration or of any part thereof.

B. G. RAO, *Returning Officer.*

Contai, the 9th March 1937.

Under rule 9 of the Bengal Legislative Assembly and the Bengal Legislative Council Electoral (Election Expenses and Election Petitions) Rules, 1936, it is hereby notified for the information of all those concerned that Babu Nikunja Behari Maity, a candidate duly returned from the Midnapore South-East General (Rural) Constituency of the Bengal Legislative Assembly, has filed on 9th March 1937 his return of election expenses and the declaration in respect thereof, under sub-rules (*1*) and (*2*) of rule 7 of the said rules. This return is open for inspection on payment of a fee of Re. 1 in the office of the Subdivisional Magistrate, Contai, between the hours of 11 a.m. and 3 p.m. for a week from the date of publication of this notice in the *Calcutta Gazette*, or from 25th March 1937, whichever is later.

Any person may, on payment of a fee of Rs. 2 for each copy, obtain attested copies of the return or declaration or of any part thereof.

B. G. RAO, *Returning Officer.*

Contai, the 9th March 1937.

Under rule 9 of the Bengal Legislative Assembly and the Bengal Legislative Council Electoral (Election Expenses and Election Petitions) Rules, 1936, it is hereby notified for the information of all those concerned that Babu Iswar Chandra Mal, a candidate duly returned from the Midnapore South-West General (Rural) Constituency of the Bengal Legislative Assembly, has filed on the 9th day of March 1937 his return of election expenses and the declaration in respect thereof, as required under sub-rules (*1*) and (*2*) of rule 7 of the aforesaid rules. This return is open to inspection on payment of a fee of Re. 1 in the office of the Subdivisional Magistrate of Contai between the hours of 11 a.m. and 3 p.m. for a week from the date of publication of this notice in the *Calcutta Gazette*, or from the 25th March 1937, whichever is later.

Any person may, on payment of a fee of Rs. 2 for each copy, obtain attested copies of the return or declaration or of any part thereof.

B. G. RAO, *Returning Officer.*

Contai, the 8th March 1937.

It is hereby notified that Babu Achintya Nath Sasmal, an unsuccessful candidate for the election in the Midnapore South-West General (Rural) Constituency of the Bengal Legislative Assembly, has, on the 8th day of March 1937, filed his return of election expenses as required by rule 7, clauses 1 and 2 of the Bengal Legislative Assembly and the Bengal Legislative Council Electoral (Election Expenses and Election Petitions) Rules, 1936. These can be inspected in the office of the Subdivisional Magistrate, Contai, on payment of a fee of Re. 1 between the hours of 11 a.m. and 3 p.m. for a week from the publication of this notice in the *Calcutta Gazette*, or from the 25th March 1937, whichever is later.

2. Any person may, on payment of a fee of Rs. 2 for each copy, obtain attested copies of the return or declaration or of any part thereof.

B. G. RAO, *Returning Officer.*

Chinsura, the 19th March 1937.

No. 2595J.G.—This office notice No. 2151-J.G., dated 8th March 1937, published at page 616 of the *Calcutta Gazette*, dated 18th March 1937, with regard to the filing of the return of election expenses by Babu Prasanna Kumar Das, a nominated candidate for election in respect of the seat reserved for the scheduled caste from the Hooghly North-East (Rural) General Constituency of the Bengal Legislative Assembly, is hereby cancelled as the return lodged by him does not conform to the prescribed rules and is invalid.

S. P. GHOSH, *Returning Officer*

Chinsura, the 19th March 1937.

No. 2596J.G.—This office notice No. 2172-J.G., dated 8th March 1937, published at page 616 of the *Calcutta Gazette*, dated 18th March 1937, with regard to the filing of the return of election expenses by Maulvi A. M. A. Zaman, an accepted candidate for election from the Hooghly-*cum*-Serampore (Registered Factory) Labour Constituency of the Bengal Legislative Assembly, is hereby cancelled as the return lodged by him does not conform to the prescribed rules and is invalid.

S. P. GHOSH, *Returning Officer.*

Orders by the Deputy Inspector-General of Police, Burdwan Range.

Chinsura.—No. 2119.—19th March 1937.—Mr. W. B. Webster, Inspector, E. I. Railway Police, Howrah, is granted 1 month's privilege leave, on medical certificate, in extension of the leave already granted to him.

Babu Satyendra Nath Chatarji, officiating Inspector, Birbhum, will continue to act as such, *vice* Babu Gostha Bihari Datta, retired.

J. M. MACKENZIE,

Deputy Inspector-General of Police (offg.).

Chittagong Division—Chittagong.

No. 17166G. — 20th March 1937. — Maulvi Ayub Ali, Sub-Deputy Collector, Chittagong, is allowed leave on average pay for the 25th March 1937, under rule 81 (*b*) (*ii*) of the Fundamental Rules.

No. 17786G.—22nd March 1937.—In exercise of the power conferred by sub-section (2) of section 3 of the Bengal Agricultural Debtors Act, 1935 (Bengal Act VII of 1936), delegated to Commissioner by Government notification No. 10105-81ER., dated the 14th July 1936, the undersigned is pleased to appoint the following persons to be Chairmen and members, respectively, of the undermentioned Debt Settlement Boards in the district of Chittagong, for a term of three years with effect from the date of this notication :—

Sadar subdivision.

Nanupur Debt Settlement Board.

Sub-Registrar of Nanupur (*ex-officio*), member and Chairman.

Members.

Babu Mahim Chandra Deb.
Babu Ramesh Chandra Sil.
Maulvi Nurul Hoque.
Maulvi Fazlur Rahman.

Rajnagar Debt Settlement Board.

Maulvi Abdul Ghani Chaudhury, member and Chairman.

Members.

Maulvi Siddique Ahmed Chaudhury.
Babu Rai Mohan Shaha.
Maulvi Maniruzzaman Matbar.
Babu Phanindra Lal Das.

Rangunia Debt Settlement Board.

Babu Lalit Mohan Barua, member and Chairman.

Members.

Babu Subal Chandra Dey.
Babu Nalini Ranjan Shaha.
Maulvi Badiuzzaman Chaudhury.
Maulvi Aminar Rahman.

Bhujpur Debt Settlement Board.

Sub-Registrar of Kazir Hat (*ex-officio*), member and Chairman.

Members.

Babu Subal Chandra Dey.
Babu Jagat Chandra Shaha.
Maulvi Makbul Ahmed.
Maulvi Abul Hussain Chaudhury.

Bibirhat Debt Settlement Board.

Sub-Registrar of Fatickchhary (*ex-officio*), member and Chairman.

Members.

Maulvi Badiul Alum Chaudhury, B.L.
Babu Rajani Kanta Mahajan.
Maulvi Hafezar Rahaman Chaudhury.
Maulvi Abdur Rahman Chaudhury.

Hathazari Debt Settlement Board.

Maulvi Abdul Latif, B.L., member and Chairman.

Members.

Babu Jatindra Mohan Nath.
Babu Aparna Charan Mahajan.
Maulvi Khaje Ali Chawdhury.
Maulvi Rahim Baksha Chawdhury.

Fatehabad Debt Settlement Board.

Sub-Registrar of Fatehabad (*ex-officio*), member and Chairman.

Members.

Babu Dinesh Chandra Bhattacharjee, B.T.
Babu Brojo Kishore Shaha, B.SC., B.A.
Maulvi Muhammed Yusof (Doctor).
Maulvi Abdur Razzak, B.A.

Sholasahar Debt Settlement Board.

Maulvi Abul Bashar Md. Shayesta Khan, member and Chairman.

Members.

Babu Pran Hari Acherjya.
Maulvi Nazir Ahmed Chawdhury.
Maulvi Hajee Abdul Latif Sawdagar.
Maulvi Abdul Latif Khan.

Kalipur Debt Settlement Board.

Maulvi Shafiquor Rahman Siddiqui, member and Chairman.

Members.

Babu Jogesh Chandra Datta.
Babu Satish Chandra Sen, B.SC.
Maulvi Aziz Ahmed.
Maulvi Ashraf Ali.

Jaldi Debt Settlement Board.

Maulvi Wajid Ali Chaudhury, member and Chairman.

Members.

Babu Barada Charan Biswas.
Babu Nabin Chandra Deb Sikder.
Maulvi Azizur Rahman.
Maulvi Ali Mea Sadagar.

Bajalia Debt Settlement Board.

Maulvi Akamat Ali Chaudhury, member and Chairman.

Members.

Babu Ambika Charan Saha.
Maulvi Abdul Gafur Sikder.
Maulvi Nazir Ahmed Sikder, B.L.
Maung Rhee Sadagar.

Lohagara Debt Settlement Board.

Maulvi Md. Azamulla, member and Chairman.

Members.

Babu Dhirendra Chandra Pal.
Maulvi Amir Hamza Sikder.
Maulvi Mazharul Hoq, B.L.
Maulvi Abdul Hakim Sikder.

No. 1782G.—22nd March 1937.—It is hereby notified for general information that, at the general election held on the 18th February 1937, the following gentlemen have been duly elected to be Commissioners in the various wards of the Cox's Bazar Municipality in the district of Chittagong:—

Ward A.

Rai Bepin Bihari Rakshit Bahadur.
Babu Sarat Chandra Pal.
Babu Manindra Lal Chowdhury.
Maulvi Farid Bokht.

Ward B.

Babu Bijon Bihari Chakravarti.
Babu Girish Chandra Chowdhury.
Maung Shwetun Maung.
Babu Jatindra Bikas Nandi.

Ward C.

Maung Shwezanoo Sadagor.
Munshi Sayed Ahmed.
Munshi Fazal Karim.

Ward D.

Maulvi Kabiruddin Ahamed.

J. D. V. HODGE, *Commissioner.*

Noakhali, the 20th March 1937.

No. 2520J.—It is notified for general information under rule 9 of the Bengal Legislative Assembly and the Bengal Legislative Council Electoral (Election Expenses) Rules, 1936, that the return of the election expenses supported by declarations for the last general election of a member to the Bengal Legislative Assembly from the Noakhali Central Muhammadan Rural Constituency has been lodged by the candidate Mohammad Fazlullah *alias* Chunnoo Mian on the 20th March 1937.

Any person shall, on payment of a fee of one rupee, be entitled to inspect the above return or declaration in the office of the Returning Officer, Noakhali, between the hours of 11 a.m. and 5 p.m. on office days.

R. K. MITRA, *Returning Officer (District Magistrate).*

Tippera, the 22nd March 1937.

Under rule 9 of the Bengal Legislative Assembly Electoral (Election Expenses and Election Petitions) Rules, 1936, Aswini Kumar Biswas, a duly nominated member of the Tippera General Rural Constituency of the Bengal Legislative Assembly, has lodged in my office the return of election expenses and declarations on the 22nd March, 1937. Anybody can inspect it in the District Magistrate's office, Comilla, on any working day between 11 a.m. and 5 p.m. on payment of a fee of Re. 1, and is entitled to get a copy or any part thereof on payment of a fee of Rs. 2 for each copy.

J. C. CHAUDHURY, for *Returning Officer (District Magistrate).*

Orders by the Deputy Inspector-General of Police, Bakarganj Range.

Barisal.—No. 1268. — 18th March 1937.—In partial modification of the notification Barisal, No. 859, dated 25th February 1937, published in the *Calcutta Gazette*, dated 11th March 1937, Babu Subarna Kumar Basu, Inspector, Tippera, is granted 3 months' leave on average pay, under rule 81 (*b*) (*ii*) of the Fundamental Rules, with effect from the 18th February 1937.

Maulvi Bazlur Rashid Chaudhuri, officiating Inspector, Tippera, continued to act as such in the vacancy with effect from the 1st March 1937.

G. H. MANNOOCH,
Deputy Inspector-General of Police (offg.).

Dacca Division—Dacca.

No. 1448J.—17th March 1937.—Babu Satyendra Nath Roy, Sub-Deputy Collector, who has been posted to the Dacca Division in Government notification No. 2444A., dated the 9th March 1937, is posted to Kishoreganj in the district of Mymensingh on general duty.

No. 968R.—19th March 1937.—In exercise of the powers delegated to me by Government notification No. 10106L.R., dated the 14th July 1936, and with reference to notification No. 10094L.R., dated 14th July 1936, sanctioning the establishment of the Alimabad Debt Settlement Board in the Sadar (North) subdivision of the Bakarganj district, published at page 1820, Part I of the *Calcutta Gazette*, dated the 30th July 1936, I hereby order under section 4 of the Bengal Agricultural Debtors Act, 1935 (Bengal Act VII of 1936), that the said board be dissolved.

No. 996R.—22nd March 1937.—In exercise of the power delegated to me by Government notification No. 10106L.R., dated the 14th July 1936, and with reference to notification No. 198R., dated the 26th February 1937, appointing certain persons to be Chairman and members of the Basail Debt Settlement Board in the Tangail subdivision of the Mymensingh district, published at page 218, Part I of the *Calcutta Gazette*, dated the 4th February 1937, I hereby cancel under section 4 of the Bengal Agricultural Debtors Act, 1935, the appointment of Babu Saroj Bandhu Roy, member and Chairman of the aforesaid Board, and appoint Babu Kritanta Kumar Roy to be a member of the Board under section 3 (2) of the Act in his place.

Babu Jogesh Lal Shaha, a sitting member of the Board, is appointed to be its Chairman.

H. R. WILKINSON, *Commissioner (offg.)*.

Dacca, the 17th March 1937.

Babu Akshoy Kumar Sen, a duly nominated candidate for election to the Bengal Legislative Council from the Dacca Division South (Rural) General Constituency, lodged with me his return of election expenses and declarations on the 9th March 1937. They may be inspected in my office on payment of the prescribed fee of Re. 1 during office hours—11 a.m. to 5 p.m.

Mr. S. A. Gomes, a duly nominated candidate for election to the Bengal Legislative Assembly from the Dacca Division Indian Christian Constituency, lodged with me his return of election expenses and declarations on the 8th March 1937. They may be inspected in my office on payment of the prescribed fee of Re. 1 during office hours—11 a.m. to 5 p.m.

H. R. WILKINSON, *Returning Officer and Commissioner (offg.)*.

Faridpur, the 13th March 1937.

No. 2134J.—It is hereby notified for general information—

(*a*) Under sub-section (*2*) of section 6 of the Bengal Village Self-Government Act, 1919 (Bengal Act V of 1919), the following gentlemen have been duly elected to be members of the Dakhinbari union board in police-station Baliakandi of the Goalundo subdivision of the Faridpur district:—

Maulvi Sayed Haidar Ali.
Babu Purna Sashi Sarkar.
Babu Nagendra Nath Ghose.
Babu Rati Kanta Kar.
Munshi Nepa Mollah.
Munshi Danej Mandol.

(*b*) Under sub-section (*3*) of section 6 of the Act, the following gentlemen have been appointed by the District Magistrate of Faridpur to be members of the said union board:—

Maulvi Kazi Akbar Hossain.
Maulvi Esmail Khan.
Munshi Basiruddin Biswas.

K. A. L. HILL, *District Magistrate*.

Mymensingh, the 17th March 1937.

In exercise of the powers conferred by section 65 of the Bengal Village Self-Government Act, 1919 (Bengal Act V of 1919), the Governor in Council is pleased to appoint the following members of the Kuliarchar union board within the Kuliarchar police-station, to be, during their term of office as such members, a union bench within the jurisdiction of the said union board of which they are members for the purposes of that section:—

Maulvi A. F. M. Nurullah.
Maulvi Abdut Taher Bhuya.
Babu Jatindra Mohan Roy.
Babu Kshetra Mohan Roy.
Syed Abdur Razzaque.

In exercise of the powers conferred by section 73 of the Bengal Village Self-Government Act, 1919 (Bengal Act V of 1919), the Governor in Council is pleased to appoint the following members of the Kuliarchar union board within the Kuliarchar police-station, to be, during their term of office as such members, a union court within the jurisdiction of the said union board of which they are members for the purposes of that section:—

Maulvi A. F. M. Nurullah.
Maulvi Abdut Taher Bhuya.
Babu Jatindra Mohan Roy.
Babu Kshetra Mohan Roy.
Syed Abdur Razzaque.

Mymensingh, the 20th March 1937.

No. 171C.—It is hereby notified for general information that, under section 13 of the Bengal Village Self-Government Act, 1919 (Bengal Act V of 1919), read with rule 36 of the rules for the election and appointment of members of union boards, etc., Babu Banwari Lal Adhikari and Maulvi Jabed Ali Sarkar have been duly appointed to be members of the Deuli union board, police-station Nagarpur, in the Tangail subdivision of the Mymensingh district, *vice* Babu Dinesh Chandra Guha and Maulvi Dewan Hatem Ali, removed.

Mymensingh, the 23rd March 1937.

No. 167C.—It is hereby notified for general information that—

(*a*) Under sub-section (*2*) of section 6 of the Bengal Village Self-Government Act, 1919 (Bengal Act V of 1919), the following gentlemen have been duly elected to be members of the undermentioned union boards in Madhupur police-station in the Tangail subdivision of the Mymensingh district:—

Madhupur police-station.

Alokdia union board.

Khan Saheb Abdul Hamid Choudhury.
Munshi Mahammad Easin.
Ahmad Ali Sarkar.
Samesuddin Talukdar.
Mahim Chandra Dam.
Mahammad Maniruddin.

Aushnara union board.

Munshi Ainuddin Ahmad.
Munshi Noimuddin Ahmad.
Munshi Jasimuddin
Mozor Ali Mondal.
Mahammad Abedali.
Md. Yasin Talukdar.

(*b*) Under sub-section (*3*) of section 6 of the Bengal Village Self-Government Act, 1919 (Bengal Act V of 1919), the following gentlemen have been appointed to be members of the undermentioned union boards in Madhupur police-station in the Tangail subdivision of the Mymensingh district:—

Madhupur police-station.

Alokdia union board.

Babu Rohidas Pondit.
Munshi Pagu Mahmud.
Mahammad Panaulla.

Aushnara union board.

Babu Mahim Chandra Seal.
Munshi Alauddin Talukdar.
Maulvi Reazuddin Choudhury.

No. 169C.—It is hereby notified for general information that, under section 13 of the Bengal Village Self-Government Act, 1919 (Bengal Act V of 1919), read with rule 36 of the rules for the election and appointments of members of union boards, etc., the following gentlemen have been appointed as members of the union boards under which their names have been shown in places of the members noted against them for the remaining portion of the term of office:—

Tangail subdivision.

Mirzapur police-station.

Warshi union board.

Maulvi Ashrafuddin Khan (older), *vice* Warish Khan Serang, deceased.

Tangail police-station.

Mogra union board.

Babu Prohlad Chandra Bhoumik, *vice* Babu Debidas Pal, removed.
Babu Gadadhar Bose, *vice* Babu Promatha Nath Guha, removed.

K. G. MORSHED, *District Magistrate.*

Barisal, the 17th March 1937.

It is hereby notified under rule 9 of the Bengal Legislative Assembly and the Bengal Legislative Council Electoral (Election Expenses and Election Petitions) Rules, 1936, that Babu Saral Kumar Dutta, a candidate of the Bengal Legislative Assembly from the Bakargunj North-east (Rural) General Constituency, lodged his return of election expenses on the 9th March 1937 and made the required declaration on the 13th March 1937.

The return may be inspected in the elections office on payment of the prescribed fees between the hours of 1 p.m. and 4 p.m.

H TUFNELL-BARRETT, *Returning Officer (District Magistrate).*

Netrakona, the 9th March 1937.

Under rule 9 of the Bengal Legislative Assembly and the Bengal Legislative Council Electoral (Election Expenses and Election Petitions) Rules, 1936, it is hereby notified for general information that the return of election expenses under rule 7 (*2*) of the aforesaid rules has been filed before me on the 9th March 1937 by Maulvi Safaruddin Ahmad Mazumdar from Netrakona North Muhammadan Constituency of the Bengal Legislative Assembly. This declaration is open to inspection from 11 a.m. to 5 p.m. in my office on payment of a fee of Re. 1 only. Attested copy of the return or any part thereof can be obtained from this office on payment of a fee of Rs. 2 only.

A. H. QURAISHI, *Returning Officer.*

Netrakona, the 9th March 1937.

Under rule 9 of the Bengal Legislative Assembly and the Bengal Legislative Council Electoral (Election Expenses and Election Petitions) Rules, 1936, it is hereby notified for general information that the return of election expenses under rule 7 (*2*) of the aforesaid rules has been filed before me on the 9th March 1937 by Maulvi Mia Husain Ahmad from Netrakona North Muhammadan Constituency of the Bengal Legislative Assembly. This declaration is open to inspection from 11 a.m. to 5 p.m. in my office on payment of a fee of Re. 1 only. Attested copy of the return or any part thereof can be obtained from this office on payment of a fee of Rs. 2 only.

A. H. QURAISHI, *Returning Officer.*

Netrakona, the 8th March 1937.

Under rule 9 of the Bengal Legislative Assembly and the Bengal Legislative Council Electoral (Election Expenses and Election Petitions) Rules, 1936, it is hereby notified for general information that the return of election expenses under rule 7 (*2*) of the aforesaid rules has been filed before me on the 8th March 1937 by Maulvi Moslemuddin from Netrakona North Muhammadan Constituency of the Bengal Legislative Assembly. This declaration is open to inspection from 11 a.m. to 5 p.m. in my office on payment of a fee of Re. 1 only. Attested copy of the return or any part thereof can be obtained from this office on payment of a fee of Rs. 2 only.

A. H. QURAISHI, *Returning Officer.*

Netrakona, the 5th March 1937.

Under rule 9 of the Bengal Legislative Assembly and the Bengal Legislative Council Electoral (Election Expenses and Election Petitions) Rules, 1936, it is hereby notified for general information that the return of election expenses under rule 7 (2) of the aforesaid rules has been filed before me on the 5th March 1937 by Maulvi Abul Husain Ahmad from the Netrakona North Muhammadan Constituency of the Bengal Legislative Assembly. This declaration is open to inspection from 11 a.m. to 5 p.m. in my office on payment of a fee of Re. 1 only. Attested copy of the return or any part thereof can be obtained from this office on payment of a fee of Rs. 2 only.

A. H. QURAISHI, *Returning Officer.*

Netrakona, the 9th March 1937.

Under rule 9 of the Bengal Legislative Assembly and the Bengal Legislative Council Electoral (Election Expenses and Election Petitions) Rules, 1936, it is hereby notified for general information that the return of election expenses under rule 7 (2) of the aforesaid rules has been filed before me on the 9th March 1937 by Maulvi Rashiduddin Khan from Netrakona North Muhammadan Constituency of the Bengal Legislative Assembly. This declaration is open to inspection from 11 a.m. to 5 p.m. in my office on payment of a fee of Re. 1 only. Attested copy of the return or any part thereof can be obtained from this office on payment of a fee of Rs. 2 only.

A. H. QURAISHI, *Returning Officer.*

Netrakona, the 9th March 1937.

Under rule 9 of the Bengal Legislative Assembly and the Bengal Legislative Council Electoral (Election Expenses and Election Petitions) Rules, 1936, it is hereby notified for general information that the return of election expenses under rule 7 (2) of the aforesaid rules has been filed before me on the 9th March 1937 by Maulvi Abdus Samad Talukdar from Netrakona South Muhammadan Constituency of the Bengal Legislative Assembly. This declaration is open to inspection from 11 a.m. to 5 p.m. in my office on payment of a fee of Re. 1 only. Attested copy of the return or any part thereof can be obtained from this office on payment of a fee of Rs. 2 only.

A. H. QURAISHI, *Returning Officer.*

Netrakona, the 9th March 1937.

Under rule 9 of the Bengal Legislative Assembly and the Bengal Legislative Council Electoral (Election Expenses and Election Petitions) Rules, 1936, it is hereby notified for general information that the return of election expenses under rule 7 (2) of the aforesaid rules has been filed before me on the 9th March 1937 by Maulvi Kabiruddin Khan from Netrakona South Muhammadan Constituency of the Bengal Legislative Assembly. This declaration is open to inspection from 11 a.m. to 5 p.m. in my office on payment of a fee of Re. 1 only. Attested copy of the return or any part thereof can be obtained from this office on payment of a fee of Rs. 2 only.

A. H. QURAISHI. *Returning Officer.*

Notice under rule 9.

Jamalpur, the 8th March 1937.

Name of the constituency.	Name of the candidates.	Date of lodging return of expenses by the candidate.	Date of making declaration by the candidate and by his election agent, if any.
Jamalpur East (Rural) Muhammadan.	Fazlar Rahaman Muktear *alias* Fazumia.	8th March 1937 ..	8th March 1937.
Ditto	Maulvi Khos Muhammad Choudhury.	Ditto ..	Ditto.
Ditto	Sarafatuddin Ahamed ..	Ditto ..	Ditto.
Jamalpur West (Rural) Muhammadan.	A. K. M. Bafatuddin Talukder.	Ditto ..	Ditto.
Ditto	Giasuddin Ahamad ..	Ditto ..	Ditto.
Ditto	Haji Maharuddin Talukder	Ditto ..	6th March 1937.

The abovementioned returns and declarations can be inspected in my office between 11 a.m. and 5 p.m. Any person shall, on payment of a fee of one rupee, be entitled to inspect any such return or declaration, and on payment of a fee of Rs. 2 for each copy to obtain attested copies thereof or of any part thereof.

E. R. KITCHIN, *Returning Officer.*

Notice under rule 9.

Jamalpur, the 9th March 1937.

Name of the constituency.	Name of the candidates.	Date of lodging return of expenses by the candidate.	Date of making declaration by the candidate and by his election agent, if any.
Jamalpur North (Rural) Muhammadan.	Abul Khayer Muhammad Mahmudal Haq.	9th March 1937 ..	9th March 1937.
Ditto	Muhammad Abdul Jabbar Palwan.	Ditto ..	Ditto.

The abovementioned returns and declarations can be inspected in my office between 11 a.m. and 5 p.m. Any person shall, on payment of a fee of one rupee, be entitled to inspect any such return or declaration, and on payment of a fee of Rs. 2 for each copy to obtain attested copies thereof or of any part thereof.

E. R. KITCHIN, *Returning Officer.*

Notice under rule 9.

Jamalpur, the 10th March 1937.

Name of the constituency.	Name of the candidate.	Date of lodging return of expenses by the candidate.	Date of making declaration by the candidate and by his election agent, if any.
Jamalpur North (Rural) Muhammadan.	Azizar Rahaman *alias* Wanna Mia.	10th March 1937 ..	10th March 1937.

The abovementioned returns and declarations can be inspected in my office between 11 a.m. and 5 p.m. Any person shall, on payment of a fee of one rupee, be entitled to inspect any such return or declaration, and on payment of a fee of Rs. 2 for each copy to obtain attested copies thereof or of any part thereof.

E. R. KITCHIN, *Returning Officer.*

Notice under rule 9.

Jamalpur, the 23rd March 1937.

Name of the constituency.	Name of the candidate.	Date of lodging return of expenses by the candidate.	Date of making declaration by the candidate and by his agent, if any.
Jamalpur North (Rural) Muhammadan.	Najmul Haq Chaudhury ..	23rd March 1937 ..	23rd March 1937.

The abovementioned returns and declarations can be inspected in my office between 11 a.m. and 5 p.m. Any person shall, on payment of a fee of one rupee, be entitled to inspect any such return or declaration, and on payment of a fee of Rs. 2 for each copy to obtain attested copies thereof or of any part thereof.

E. R. KITCHIN, *Returning Officer.*

Orders by the Deputy Inspector-General of Police, Dacca Range.

Dacca.—No. 1185.—18th March 1937.—On return of Maulvi Ashraf Ali, Inspector, Mymensingh, from leave, Maulvi Ainuddin Ahmad, officiating Inspector, Mymensingh, is transferred to Faridpur and is appointed to act as Inspector, *vice* Babu Satish Chandra Neogi, Inspector, Faridpur, on leave.

The transfer is made in the interests of public service.

This cancels the notification, Dacca, No. 994, dated 11th March 1937, published in the *Calcutta Gazette*, dated 18th March 1937, transferring Babu Bankim Chandra Gupta, officiating Inspector, Mymensingh, to Faridpur to act as Inspector, *vice* Babu Satish Chandra Neogi, Inspector, on leave, and appointing Maulvi Ainuddin Ahmad, officiating Inspector, to continue to act as such in Mymensingh, *vice* Khan Sahib A. K. Khalilullah, Inspector, acting as Deputy Superintendent.

F. W. KIDD,
Deputy Inspector-General of Police (offg.).

Presidency Division—Calcutta.

No. 411M.—19th March 1937.—In accordance with section 50 of the Bengal Municipal Act 1932 (Bengal Act XV of 1932), it is hereby notified for general information that Maulvi Kazi Mahammad Afif has been duly elected Chairman of the Chakdah Muncipality in the district of Nadia, *vice* Babu Panchanan Bhattacharji, deceased.

No. 525R.G. — 22nd March 1937. — Mr. Sushil Kumar Mitra, Sub-Deputy Collector and Circle Officer, Chuadanga, Nadia, is granted leave on average pay for the 25th March 1937, under rule 10 of the Bengal Services (Revision of Leave) Rules, 1934.

A. J. DASH, *Commissioner.*

Khulna, the 15th March 1937.

It is hereby notified for general information that, under section 11 of the Village Self-Government Act, 1919 (Bengal Act V of 1919), read with rule 21 of the rules for the election and appointment of members, etc., the following gentlemen have been duly elected to be members of the undermentioned union boards in police-station Paikgacha within the Sadar subdivision of the Khulna district:—

Raruli-Katipara Banka union board.

Ward No. I.

Babu Subodh Krishna Bose.
Babu Manindra Kumar Roy Choudhury.

Ward No. II.

Babu Purna Chandra Bose.
Babu Amulya Mohon Ghosh.

Ward No. III.

Babu Charu Chandra Banerjee.
Maulvi Basir Sardar.

Kapilmoni union board.

M. Haranullah Gazi.
M. Derastulla Sardar.
Babu Abinash Chandra Sadhu.
M. Madar Mondal.
Babu Dwijabar Sadhu.
M. Alam Sardar.

Haridhali union board.

Babu Abani Mohon Majumdar.
Babu Raj Kumar Bose.
M. Mojahar Ali Sardar.
M. Habibar Rahman Munshi.
M. Azimuddi Sardar.
Babu Charu Chandra Bose.

Garaikhali union Board.

Babu Aswini Kumar Mondal.
Babu Rajendra Nath Mondal.
Maulvi Dabiruddin Sardar.
Babu Nilkantha Sana.
Babu Benode Behari Sana.
Babu Banka Behari Mondal.

Lata union board.

Babu Keshab Lal Mondal.
Babu Bama Charan Mahaldar.
Babu Bepin Behari Biswas.
Babu Rameshwar Ray.
Babu Sashadhar Roy.
Babu Atal Chandra Roy.

It is hereby notified for general information that, under section 11 of the Bengal Village Self-Government Act, 1919 (Bengal Act V of 1919), read with rule 27 of the rules for the election and appointment of members, etc., the following gentlemen have been appointed by me to be members of the undermentioned union boards in police-station Paikgacha within the Sadar subdivision of the Khulna district:—

Raruli-Katipara Banka union board.

Ward No. I.

Maulvi Sadekali Sardar.

Ward No. II.

Babu Kristodas Ghose.

Ward No. III.

Maulvi Jeher Sardar.

Haridhali union board.

Babu Satyendra Nath Mitra
Babu Hriday Nath Poddar.
Maulvi Sheik Wajed.

Kapilmuni union board

Maulvi Ahmad Ali Sardar.
Maulvi Kafiluddin Ahmad
Babu Tarak Nath Mandal

Garaikhali union board.

Maulvi Sukur Gazi.
Babu Bhudhar Chandra Bachar.
Maulvi Dabiruddin Sardar.

Lata union board.

Babu Rajani Mandal.
Babu Harasit Biswas.
Munshi Meher Fakir.

Gadaipur union board.

Babu Upendra Nath Sadhu Khan.
Babu Benode Behari Sadhu Khan.
Maulvi Sheik Mohiuddin.

It is hereby notified for general information that the following gentlemen have been duly appointed as members of the Gadaipur union board in Paikgacha within the Sadar subdivision of the Khulna district under section 11, read with section 6 (*4*) of the Bengal Village Self-Government Act, 1919 (Bengal Act V of 1919):—

Paikgacha police-station.

Gadaipur union board.

Maulvi Mozaharali Gazi.
Maulvi Abdul Jabbar Mondal.
Maulvi Zahiruddin Ahmad.
Maulvi Natai Gazi.
Babu Basanta Mukerjee.
Maulvi Keyamuddin Ahmad.

B. SARKAR, *District Magistrate.*

Krishnagar, the 18th March 1937.

No. 901L.S.-G.—It is hereby notified for general information that, under section 19 of the Bengal Village Self-Government Act, 1919 (Bengal Act V of 1919), read with rule 36 of the rules for the election and appointment of members, etc., of union boards under the said Act, Babu Gobinda Mohan Haldar has been elected to be a member of the Kalinga union board within the Chapra police-station in the Sadar subdivision of the Nadia district in place of Babu Jitendra Nath Haldar, deceased.

Krishnagar (Nadia), the 22nd March 1937.

No. 953L.S.-G.—It is hereby notified for general information that, under section 13 of the Bengal Village Self-Government Act, 1919 (Bengal Act V of 1919), read with section 6 (*3*) and rule 36 of the rules for the election and appointment of members of union boards, Babu Gour Gopal Sinha has been declared elected as a member of the Habibpur union board of Ranaghat police-station in the Ranaghat subdivision of the district of Nadia, *vice* Nani Gopal Rajbanshi, deceased.

M. M. STUART, *District Magistrate.*

Khulna, the 19th March 1937.

Corrigendum.—*Read* "Babu Himanshu Kumar Roy" in place of "Maulvi Himanshu Kumar Roy" published at page 450, Part I of the *Calcutta Gazette*, dated 4th March 1937, as an elected member of the Deluti union board.

2. *Read* "Maulvi Bholai Mondal" in place of "Babu Bholai Mondal" published at page 450, Part I of the *Calcutta Gazette*, dated 4th March 1937, as an appointed member of the Damodar union board.

3. *Read* "Babu Debendra Nath Swar" in place of "Babu Debendra Nath Sen" published at page 450, Part I of the *Calcutta Gazette*, as an appointed member of the Phultala union board.

U. C. DUTT, for *District Magistrate.*

Satkhira, the 16th March 1937.

It is hereby notified for general information that, under rule 9 of the Bengal Legislative Assembly and the Bengal Legislative Council Electoral (Election Expenses and Election Petitions) Rules, 1936, Maulvi Jalaluddin Hashemy Syed, a duly returned candidate from the Satkhira Rural Muhammadan Constituency of the Bengal Legislative Assembly, has lodged with me his return of election expenses and declaration on the 8th March 1937 under rule 7 (*2*) of the aforesaid rules. They may be inspected in my office on payment of the prescribed fee of Re 1 only, and attested copy of the same or any part thereof may be had on payment of a fee of Rs. 2 only between the hours of 11 a.m and 5 p.m.

A. MEAH, *Returning Officer*
(*Subdivisional Officer*).

Satkhira, the 16th March 1937.

It is hereby notified for general information that, under rule 9 of the Bengal Legislative Assembly and the Bengal Legislative Council Electoral (Election Expenses and Election Petitions) Rules, 1936, Maulvi Abul Quasem, an unsuccessful candidate from the Satkhira Rural Muhammadan Constituency of the Bengal Legislative Assembly, has lodged with me his return of election expenses and declaration on the 5th March 1937 under rule 7 (*2*) of the aforesaid rules. They may be inspected in my office on payment of the prescribed fee of Re. 1 only, and attested copy of the same or any part thereof may be had on payment of a fee of Rs. 2 only between the hours of 11 a.m. and 5 p.m.

A. MEAH, *Returning Officer*
(*Subdivisional Officer*).

Satkhira, the 16th March 1937

It is hereby notified for general information that, under rule 9 of the Bengal Legislative Assembly and the Bengal Legislative Council Electoral (Election Expenses and Election Petitions) Rules, 1936, Maulvi Sohailuddin

Ahmad, an unsuccessful candidate from the Satkhira Rural Muhammadan Constituency of the Bengal Legislative Assembly, has lodged with me his return of election expenses and declaration on the 9th March 1937 under rule 7 (2) of the aforesaid rules. They may be inspected in my office on payment of the prescribed fee of Re. 1 only, and attested copy of the same or any part thereof may be had on payment of a fee of Rs. 2 only between the hours of 11 a.m. and 5 p.m.

A. MEAH, *Returning Officer (Subdivisional Officer)*.

Jangipur (Murshidabad), the 18th March 1937.

It is hereby notified that Humayun Raza Chowdhury of 20, Syed Amir Ali Avenue, Calcutta, an accepted candidate for the election from the Jangipur (Rural) Muhammadan Constituency of the Bengal Legislative Assembly, has filed on the 8th March 1937 his return of election expenses and declarations in respect thereof, as required under sub-rules (1) and (2) of rule 7 of the Bengal Legislative Assembly and the Bengal Legislative Council Electoral (Election Expenses and Election Petitions) Rules, 1936. These can be inspected in the office of the Subdivisional Officer, Jangipur (Murshidabad), on payment of a fee of Re. 1 only on any working day between the hours of 11 a.m. and 5 p.m. Attested copy of the return or any part thereof may be obtained on payment of a fee of Rs. 2 only for each copy.

A. C. SAMANTA, *Returning Officer and Subdivisional Officer*.

Jangipur (Murshidabad), the 18th March 1937.

It is hereby notified that Amjadali Biswas, an accepted candidate for the election from the Jangipur (Rural) Muhammadan Constituency of the Bengal Legislative Assembly, has filed on the 17th March 1937 his return of election expenses and declarations in respect thereof, as required under sub-rules (1) and (2) of rule 7 of the Bengal Legislative Assembly and the Bengal Legislative Council Electoral (Election Expenses and Election Petitions) Rules, 1936. These can be inspected in the office of the Subdivisional Officer, Jangipur (Murshidabad), on payment of a fee of Re. 1 only on any working day between the hours of 11 a.m. and 5 p.m. Attested copy of the return or any part thereof may be obtained on payment of a fee of Rs. 2 only for each copy.

A. C. SAMANTA, *Returning Officer and Subdivisional Officer*.

Bagerhat, the 22nd March 1937.

It is hereby notified for general information under rule 9 of the Bengal Legislative Assembly Electoral (Election Expenses and Election Petitions) Rules, 1936, that the following duly nominated candidates for election to the Bagerhat Muhammadan (Rural) Constituency of the Bengal Legislative Assembly have filed their returns of election expenses and the declarations on the dates noted against their names:—

Name of candidate.	Date on which the return of election expenses and the declarations have been lodged.
1. Maulvi Hemayet Uddin Ahmad ..	10th March 1937.
2. Maulvi Mostagawsal Hoque Syed	8th March 1937.
3. Maulvi Sultan Ali Syed ..	4th March 1937.
4. Maulvi Surat Ali Mulliki ..	9th March 1937.

The returns can be inspected on any working day between the hours of 11 a.m. and 5 p.m. at the office of the Subdivisional Officer, Bagerhat, by any person on payment of Re. 1 only and attested copies thereof or any part thereof may be obtained on payment of a fee of Rs. 2 only.

S. K. SANYAL, *Subdivisional Officer (Returning Officer)*.

Calcutta, the 20th March 1937.

It is notified under rule 9 of the Bengal Legislative Assembly Electoral (Election Expenses and Election Petitions) Rules, 1936, that Mr. Dwijendra Chandra Ghose, a candidate to the Bengal Legislative Assembly from the Calcutta South Central General (Urban) Constituency, has lodged his return of election expenses and declaration on the 19th March 1937.

It may be inspected in the election office at No. 2, Bankshall Street, on payment of proper fees between the hours of 1 p.m. and 4 p.m.

S. K. SINHA, *Chief Presidency Magistrate and Returning Officer*.

Orders by the Deputy Inspector-General of Police, Criminal Investigation Department.

Calcutta.—No. 3148.—20th March 1937.—Babu Pran Gopal Ray, Inspector (Honorary Deputy Superintendent), is granted 3 months' leave on average pay with effect from 1-4-1937, a.m., preparatory to his retirement.

C. E. S. FAIRWEATHER,
Deputy Inspector-General of Police.

Rajshahi Division—Jalpaiguri.

No. 850J.—17th March 1937.—Maulvi Kafiluddin Ahmed, Sub-Deputy Collector, Kurigram, in the district of Rangpur, is allowed leave on average pay for ten days from 4th March 1937 to 13th March 1937, under rule 81 (*b*) (*ii*) of the Fundamental Rules.

No. 855J.—17th March 1937.—Maulvi Aftabuddin Ahmed, Sub-Deputy Collector and Circle Officer, Nawabganj, in the district of Malda, is allowed leave on average pay for twelve days, under rule 81 (*b*) (*ii*) of the Fundamental Rules, with effect from 30th March 1937.

The Circle Officer is likely to return to his post on the expiry of the leave.

No. 1257M.—23rd March 1937.—It is hereby notified for general information that, under rule 20 (*b*) of the manual of rules for the management of hospitals and dispensaries under the supervision of the Government of Bengal, Babu Nirode Behari Choudhury is appointed to be a member of the committee for the management of the hospital at Mahiganj in the district of Rangpur in place of Babu Bhuban Behari Choudhuri whose appointment was notified in this office notification No. 2509J., dated the 21st June 1935, and who has since resigned.

L. R. FAWCUS, *Commissioner (offg.)*.

No. 3028 J.R.—18th March 1937.—It is hereby notified under rule 9 of the Bengal Legislative Assembly Electoral (Election Expenses and Election Petitions) Rules, 1936, that Babu Sarojendra Deb Raikut, a candidate duly nominated for election to the Bengal Legislative Assembly from the Jalpaiguri-*cum*-Siliguri General Rural Constituency, has lodged with the Returning Officer on the 17th March 1937 a return of his expenses supported by necessary declarations. The return may be inspected in the office of the Commissioner, Rajshahi Division, Jalpaiguri, during office hours on payment of a fee of Re. 1 and attested copies or copies of any part thereof may be obtained from that office on payment of a fee of Rs. 2 for each copy.

S. K. GHOSH, for *Commissioner, and Returning Officer*.

Malda, the 17th February 1937.

Under rule 32A of the Election Rules under the Local Self-Government Act, it is notified for general information that the 17th May 1937 has been fixed for the by-election of a member for the Malda local board from thana Kharba to fill up the vacancy caused by the removal of Rai Sahib Kamala Kanta Bagchi under section 18(*1*)(*c*) of the Local Self-Government Act.

B. R. SEN, *District Magistrate*.

Malda, the 15th March 1937.

No. 1.—It is hereby notified for general information that, under section 13 of the Bengal Village Self-Government Act, 1919 (Bengal Act V of 1919), Munshi Khaliluddin Ahmed has been duly elected to be a member of the Kankribandha Jhowbona union board in police-station Kaliachak, in the district of Malda, *vice* Munshi Ketabuddin Biswas, resigned.

No. 2.—It is hereby notified for general information that, under section 13 of the Bengal Village Self-Government Act, 1919 (Bengal Act V of 1919), Munshi Eshaque Mandal, Munshi Khan Mahammad and Munshi Bashiruddin Ahmed have been duly elected to be members of the Gohalbari union board in police-station Bholahat, in the district of Malda, *vice* Munshi Abdul Aziz, Munshi Tayab Hossain Saha and Mohammad Bhadu Pandit, deceased.

[ILLEGIBLE], for *Magistrate*.

Pabna, the 20th March 1937.

It is hereby notified for general information that, under section 13 of the Bengal Village Self-Government Act, 1919 (Bengal Act V of 1919), Maulvi Chorab Husain Khondkar of Pukurpar has been elected at a by-election to be a member of the Khan-Marich union board under Chatmohar police-station in the Sadar subdivision of the Pabna district, *vice* Maulvi Kudrat Ali Khondkar, resigned.

MD. MAHMUD, *District Magistrate*.

Bogra, the 19th March 1937.

It is hereby notified under rule 9 of the Bengal Legislative Assembly and the Bengal Legislative Council Electoral (Election Expenses and Election Petitions) Rules, 1936, that Shah Mohammad Salem Jaunpuri *alias* Salem Sahib, who was nominated as a candidate for election to the Bogra East Muhammadan Constituency of the Bengal Legislative Assembly, has lodged a return of election expenses and the declarations on the 9th March 1937. They may be inspected in the office of the District Magistrate of Bogra on office days during office hours on payment of the prescribed fee of Re. 1 only.

T. I. M. NURANNABI CHAUDHURI,
District Magistrate
(Returning Officer).

Bogra, the 19th March 1937.

It is hereby notified under rule 9 of the Bengal Legislative Assembly and the Bengal Legislative Council Electoral (Election Expenses and Election Petitions) Rules, 1936, that Maulvi Hamid Uddin Ahmed, who was nominated as a candidate for election to the Bogra West (Muhammadan) Constituency of the Bengal Legislative Assembly, has lodged a return of election expenses and the declarations on the 8th March 1937. They may be inspected in the office of the District Magistrate of Bogra on office days during office hours on payment of the prescribed fee of Re. 1 only.

T. I. M. NURANNABI CHAUDHURI,
District Magistrate
(Returning Officer).

Rajshahi, the 17th March 1937.

Notice under rule 9, Part I at page 138 of the Bengal Legislative Assembly and Council Electoral (Election Expenses and Election Petitions) Rules, 1936.

It is hereby notified for general information that the returns of election expenses and declarations in respect of the constituencies of which I am the Returning Officer have been lodged with me by the candidates named below on the dates noted against their names. These returns and declarations are open to inspection on payment of a fee of Re. 1 in my office on any working day between 11 a.m. and 5 p.m. The attested copies of these returns and declarations or any part thereof may be obtained on payment of a fee of Rs. 2 for each copy :—

Schedule.

Name of constituency.	Name of candidate filing the returns and declarations.	Date of filing.
Rajshahi (Rural) General ..	1. Babu Satya Priya Banerji ..	8th March 1937.
	2. Babu Saral Kumar Ghosh ..	1st March 1937.
	3. Babu Jogindra Nath Khan ..	8th March 1937.
Rajshahi Central (Rural) Muhammadan.	1. Maulvi Mafizuddin Ahmed ..	9th March 1937.
	2. Maulvi Azizur Rahman	8th March 1937.
	3. Maulvi Dewan Nasiruddin Ahmed ..	9th March 1937.
	4. Maulvi Mohammed Moslem Ali Molla	8th March 1937.

A. S. RAY,

District Magistrate and Returning Officer.

Malda, the 16th March 1937.

It is notified for general information, under rule 9 of the Bengal Legislative Assembly and the Bengal Legislative Council Electoral (Election Expenses and Election Petitions) Rules, 1936, that the persons named below have filed their return of election expenses and the declarations on the dates, and in respect of the constituencies, noted against their names :—

Name of candidate.	Name of constituency of the Bengal Legislative Assembly.	Date on which the return of election expenses and the declarations have been lodged.
1. Humayun Reza Chowdhury ..	Malda South Muhammadan (Rural) ..	11th March 1937.
2. M. Farhad Raza Chowdhury ..	Ditto	Ditto.

The returns can be inspected on office days during office hours at the office of the District Magistrate, Malda, by any person on payment of a fee of Re. 1 only and the attested copies of the same or any part thereof may be had on payment of a fee of Rs. 2 only.

[ILLEGIBLE], for *Returning Officer on tour.*

Rajshahi, the 17th March 1937.

Notice under rule 9, Part I at page 138 of the Bengal Legislative Assembly and Council Electoral (Election Expenses and Election Petitions) Rules, 1936.

It is hereby notified for general information that the returns of election expenses and the declarations in respect of the constituency of which I am the Returning Officer have been lodged with me by the candidates named below on the dates noted against their names. These returns and declarations are open to inspection on payment of a fee of Re. 1 in my office on any working day between 11 a.m. and 5 p.m. The attested copies of these returns and declarations or any part thereof may be obtained on payment of a fee of Rs. 2 for each copy :—

Schedule.

Name of constituency.	Name of candidate filing the returns and declarations.	Date of filing.
Rajshahi South (Rural) Muhammadan.	1. Maulvi Mohammed Amir Ali Mia ..	4th March 1937.
	2. Maulvi Mohammed Abdul Hamid ..	5th March 1937.
	3. Maulvi Mirza Mohammed Yakub ..	8th March 1937.

K. MITRA,

Sadar Subdivisional Magistrate and Returning Officer.

WEST BENGAL SECRETARIAT LIBRARY

Pabna, the 22nd March 1937.

Notice is hereby given under rule 9 of the Bengal Legislative Assembly and the Bengal Legislative Council Electoral (Election Expenses and Election Petitions) Rules, 1936, that the returns of election expenses under Part II of the Government of India (Provincial Elections, Corrupt Practices and Election Petition) Order, 1936, and the declarations made in respect thereof by the undermentioned candidates for election to the Pabna West (Rural) Muhammadan Constituency, Bengal Legislative Assembly, have all been lodged with the Returning Officer on the dates specified against each, and that they can be inspected at the office of the District Magistrate, Pabna, between 11 a.m. and 3 p.m., and any person shall, on payment of a fee of one rupee, be entitled to inspect any such return or declaration, and on payment of Rs. 2 for each copy to obtain attested copies thereof or any part thereof:—

Name of candidate.	Date on which returns and declarations have been lodged.
1. Maulvi Abdul Gafur ..	5th March 1937.
2. Maulvi A N. Abdul Hamid.	8th March 1937.
3. Maulvi Abdul Hamid ..	9th March 1937.

N. CHAUDHURI, *Returning Officer (Subdivisional Officer).*

Pabna, the 22nd March 1937.

Notice is hereby given under rule 9 of the Bengal Legislative Assembly and the Bengal Legislative Council Electoral (Election Expenses and Election Petitions) Rules, 1936, that the returns of election expenses under Part II of the Government of India (Provincial Elections, Corrupt Practices and Election Petition) Order, 1936, and the declarations made in respect thereof by the undermentioned candidates for election to the Pabna East (Rural) Muhammadan Constituency, Bengal Legislative Assembly, have all been lodged with the Returning Officer on the dates specified against each, and that they can be inspected at the office of the District Magistrate, Pabna, between 11 a.m. and 3 p.m., and any person shall, on payment of a fee of one rupee, be entitled to inspect any such return or declaration, and on payment of Rs. 2 for each copy to obtain attested copies thereof or any part thereof:—

Name of candidate.	Date on which returns and declarations have been lodged.
1. Maulvi Azhar Ali ..	5th March 1937.
2. Maulvi Raisuddin Ahammad.	8th March 1937.

N. CHAUDHURI, *Returning Officer (Subdivisional Officer).*

Registered No. C207

The Calcutta Gazette

THURSDAY, APRIL 1, 1937.

PART IA

Orders and Notifications by the Government of India republished for general information.

LEGISLATIVE DEPARTMENT.

NOTIFICATION.

New Delhi, the 5th March 1937.

No. F.102/37-C.&G.—The Governor General is pleased to accept the resignation by Mr. J. Bartley, C.I.E., of his office of Member of the Legislative Assembly.

J. D. ANDERSON,
Secy. to the Govt. of India (offg.).

HOME DEPARTMENT.

NOTIFICATIONS.

JUDICIAL.

New Delhi, the 6th March 1937.

No. F. 25/1/37.—His Majesty the King Emperor has been pleased to appoint the Hon'ble Mr. Justice A. G. R. Henderson, I.C.S., to be a permanent Judge of the High Court of Judicature at Fort William in Bengal, with effect from the 1st March 1937, *vice* the Hon'ble Mr. Justice Dwarka Nath Mitter, resigned.

The 10th March 1937.

No. F.25/1/37.—Mr. Charu Chandra Biswas, C.I.E., took his seat as an Additional Judge of the High Court of Judicature at Fort William in Bengal on the forenoon of the 1st March 1937.

J. A. THORNE,
Joint Secy. to the Govt. of India.

DEPARTMENT OF INDUSTRIES AND LABOUR.

NOTIFICATIONS.

New Delhi, the 17th March 1937.

No. M.-826.—In exercise of the powers conferred by section 17 of the Petroleum Act, 1934 (XXX of 1934), read with section 22 of the General Clauses Act, 1897 (X of 1897), the Governor-General in Council is pleased to authorise the officers specified in the annexed Schedule to test petroleum under the first-mentioned Act and to grant certificates of the results of such tests:—

THE SCHEDULE

1. The Chemical Examiner, Custom House, Madras.
2. The Municipal Health Officer, Vizagapatam.
3. The Civil Surgeon, Cochin.
4. The Chemical Examiner, Custom House, Bombay.
5. The Chemical Examiner, Custom House, Calcutta.
6. The Assistant Chemical Examiner, Custom House, Calcutta.
7. The Civil Surgeon, Chittagong.
8. The Chemical Examiner to Government, Rangoon.
9. The Petroleum Inspector, Yenangyaung.
10. The Chemical Examiner to the Governments of the Central Provinces and the United Provinces, Agra.
11. The Chemical Examiner, Custom House, Karachi.

New Delhi, the 18th March 1937.

No. M.-826 (1).—In exercise of the powers conferred by section 4 and sub-section (*1*) of section 29 of the Petroleum Act, 1934 (XXX of 1934), as applied to Carbide of Calcium by the notification of the Government of India in the Department of Industries and Labour, No. M.-826(1), dated the 15th October 1936, read with section 22 of the General Clauses Act, 1897 (X of 1897), the Governor General in Council is pleased to make the following rules which have been previously published as required by sub-section (*2*) of section 29 of the first-mentioned Act, namely:—

RULES.

CHAPTER I.

Preliminary.

1. *Short title and extent.*—(1) These rules may be called the Carbide of Calcium Rules, 1937.

(2) They shall apply to the whole of British India including British Baluchistan and the Sonthal Parganas, but excluding Burma.

2. *Supersession and savings.*—All notifications and rules issued by the local Governments and all appointments made by them under the Indian Petroleum Act, 1899 (VIII of 1899), as applied to Carbide of Calcium by the notification of the Government of India in the Department of Commerce and Industry, No. 101-10, dated the 4th January 1907, are hereby superseded, but all licences or duplicates granted or renewed, all fees imposed or levied and all powers conferred by or under any notification or rule so superseded, shall so far as they are consistent with these rules, be deemed to have been respectively granted, renewed, imposed, levied or conferred under these rules.

3. *Definitions.*—In these rules, unless there is anything repugnant in the subject or context,—

(*a*) "The Act" means the Petroleum Act, 1934;

(*b*) "Carbide" means Carbide of Calcium;

(*c*) "Chief Inspector" means the Chief Inspector of Explosives in India;

(*d*) "Conservator of the Port" includes any person acting under the authority of the officer or body of persons appointed to be Conservator of the Port under section 7 of the Indian Ports Act, 1908;

(*e*) "District Authority" means—

(*i*) in a Presidency town, or its suburbs, the Commissioner of Police; and

(*ii*) elsewhere, the District Magistrate;

(*f*) "District Magistrate" includes an Additional District Magistrate;

(*g*) "Inspector" means an officer authorised by the Governor General in Council under sub-section (*1*) of section 13 of the Act;

(*h*) "Prescribed receptacle" means a receptacle which—

(*i*) is made of metal but has no copper in its composition;

(*ii*) is hermetically closed at all times except when its contents are being placed within it or withdrawn from it; and

(*iii*) bears a stamped, embossed, painted or printed warning exhibiting in conspicuous characters the words "Carbide of Calcium —Dangerous if not kept dry" and the following caution:—

"*The contents of this package are liable, if brought into contact with moisture, to give off a highly inflammable gas*"; and

(*i*) "Sampling officer" means an officer authorised by the Governor General in Council under sub-section (*l*) of section 14 of the Act.

CHAPTER II.

Importation of Carbide.

4. *Ports of importation.*—Carbide shall not be imported except at the ports of—

Aden.
Bombay.
Calcutta.
Chittagong.
Cochin.
Karachi.
Madras.
Perim.
Port Blair.
Vizagapatam.

5. *Duty of master or agent in port.*—(1) The master or the agent of the owner of every ship arriving at any port and carrying carbide shall, on entering the port and before landing any cargo, declare in writing to the Collector of Customs and also to the Conservator of the Port, the quantity and description of such carbide.

(2) The master shall moor the ship in such place as the Conservator of the Port may direct, and, while any carbide remains on board, shall not, except for the purpose of proceeding to sea, remove the ship without the written permission of the Conservator of the Port.

(3) The master shall ensure that the hold of every ship bringing carbide into port shall be efficiently ventilated from the time the vessel enters the port until all the carbide on board has been discharged or until the ship has left the port.

6. *Receptacles.*—(1) Carbide shall be brought into port only in prescribed receptacles.

(2) The receptacles shall be of such strength and construction or so protected as not to be liable to become defective or insecure in transit otherwise than by gross negligence or extraordinary accident.

(3) No such receptacle shall be capable of containing more than 250 pounds of carbide.

7. *Defective receptacles.*—The Collector of Customs may require that any receptacle containing carbide which does not satisfy the requirements of rule 6 or which is defective shall be submerged in deep water under the direction of the Conservator of the Port, without compensation to the consignee.

8. *Opening of receptacles in port.*—No receptacle containing carbide shall be opened within the limits of a port except in premises licensed for the storage of carbide.

9. *Precautions against contact with water.*—Every reasonable precaution shall be taken to prevent the contact of water or moisture with any carbide brought into port, and, where such contact may have occurred, to prevent ignition of the gas given off.

10. *Facilities to be afforded to inspecting officers.*—The master or the agent of the owner of any ship in port with carbide on board shall, when so required by the Collector of Customs or by the Conservator of the Port or by an Inspector or sampling officer, show to such officer all carbide under his control or on board, and shall afford every reasonable facility to enable such officer to inspect such carbide so as to ascertain whether these rules are duly observed and to take samples, if such officer so desires.

11. *Landing of carbide.*—(1) Carbide shall be landed only with the permission of the Collector of Customs and at such place or places as the Conservator of the Port may direct.

(2) Carbide shall be landed only between sunrise and sunset.

12. *Removal after landing.*—All carbide landed from any ship shall be removed without unnecessary delay to some licensed place of storage, and, if conveyed by water, shall be conveyed only in an open barge certified as suitable for the conveyance of carbide by the Conservator of the Port.

13. *Port Commissioners' Regulations.*—The landing and the removal after landing of carbide in a port shall be subject to all the regulations which may from time to time be prescribed generally or specially in that behalf by the Port Commissioners, provided such regulations are not inconsistent with these rules.

CHAPTER III.

Transport of Carbide.

14. *Transport in quantity not exceeding 5 pounds.*—Carbide transported in any quantity not exceeding five pounds shall be packed in prescribed receptacles each containing not more than one pound.

15. *Transport in quantity exceeding 5 pounds.*—Carbide in quantity exceeding five pounds shall not be transported except under the following conditions:—

(*a*) the carbide shall be contained in prescribed receptacles no one of which shall be capable of containing more than 250 pounds of carbide; and

(*b*) the carbide shall not be deposited at any time during transit in any building other than a building fulfilling the requirements of rules 22 and 24 and shall not be stored in any such building except in accordance with the requirements of rule 25.

16. *Transport by railway.*—(1) Notwithstanding anything contained in clause (*b*) of rule 15, carbide while in the custody of a railway administration for transport, shall not be stored in any railway goods shed, but shall be stacked in the open under waterproof sheets and shall be so placed as to prevent any receptacle containing it from becoming wet.

(2) Where the carbide is conveyed by rail it shall be subject to all the regulations which may from time to time be prescribed generally or specially in that behalf by the railway administration over whose line it is conveyed.

(3) All fires or artificial lights or articles capable of igniting acetylene shall be kept away from carbide stacked as provided in sub-rule (1).

17. *Transport by passenger train.*—Where carbide is transported by passenger train—

(*i*) the quantity carried by any one train shall not exceed 500 pounds;

(*ii*) the vehicles containing carbide shall be well ventilated and as far as possible water-tight; and

(*iii*) no naked lamp or other artificial light capable of igniting inflammable gas shall be taken into a vehicle containing carbide.

18. *Transport by water.*—Where carbide is conveyed by water it shall be packed and stowed in accordance with the regulations issued from time to time by the Board of Trade for regulating the carriage of dangerous goods and explosives in ships.

19. *Restriction on delivery and despatch of carbide.*—(1) No person shall deliver any carbide to any one other than the holder of a storage licence or his authorized agent or a Port Authority or railway administration.

(2) No person shall despatch any carbide to any one other than the holder of a storage licence.

(3) This rule shall not apply to the delivery or despatch to any person of carbide in quantities which are permitted by these rules to be stored without licence.

CHAPTER IV.

Storage of Carbide

20. *Carbide to be "commercially pure".*—No carbide shall be kept at any place, with or without a licence, unless it is "commercially pure", that is, unless it contains no impurities which would render the gas evolved, either alone or in admixture with air, liable to ignite spontaneously.

21. *Licence for storage.*—(1) No person shall store any carbide except under a licence granted under these rules:

Provided that no licence shall be required for the storage of carbide—

(*i*) in any quantity not exceeding five pounds if it is kept in prescribed receptacles each containing not more than one pound;

(*ii*) in any quantity exceeding five and not exceeding twenty-eight pounds if it is kept in prescribed receptacles and the following conditions are observed:—

(*a*) the receptacles shall be stored in a dry and well ventilated place;

(*b*) due precautions shall be taken to prevent unauthorized persons from having access to the carbide;

(*c*) notice shall be given of such storage to the District Authority; and

(*d*) where a fixed generator is used on the premises, detailed instructions as to the care and use of the generator shall be kept constantly posted up in a place where they can conveniently be referred to by the generator attendant.

(2) No licence shall be required for the temporary storage of carbide within port limits under such conditions as the Conservator of the Port may specify.

22. *Storage buildings.*—(1) Carbide shall be stored—

(*a*) if in quantities aggregating not more than 500 pounds—in a suitable uninhabited building at least 20 feet away from any other premises: provided that quantities not exceeding 250 pounds may be stored in a place connected with a shop at a distance not less than 10 feet from any other premises:

(*b*) if in quantities aggregating more than 500 pounds and not more than 3,000 pounds—in a suitable uninhabited building at least 40 feet away from any other premises;

(*c*) if in quantities aggregating more than 3,000 pounds—in an uninhabited building at least 100 feet away from any other premises.

(2) Not more than fifty tons of carbide shall be stored in any one building.

23. *Power to reduce distances.*—The distances laid down in sub-rule (1) of rule 22 may be reduced by the Chief Inspector where screen walls are provided or other special precautions are taken or where there are special circumstances that in the opinion of the Chief Inspector warrant the reduction.

24. *Construction of storage buildings.*—Every building for the storage of carbide shall be—

(*a*) constructed of non-inflammable material, with non-inflammable roofs and with tiled, paved, cemented, iron or steel floors raised at least a foot above the ground level; and

(*b*) well ventilated and water-tight to the satisfaction of the licensing authority.

25. *Arrangements in storage buildings.*—Carbide shall be stored only on racks or trestles standing at least one foot above the level of the floor of the building, and no articles of an inflammable or combustible nature shall be kept in the same building.

26. *Disposal of carbide if wet.*—If any carbide becomes wet it shall be destroyed by being submerged in deep water. If deep water is not available, the wet carbide shall be spread out in the open in an isolated position, and all precautions shall be taken to prevent any fire or artificial light or article capable of igniting acetylene being brought near until the material has given off all its gas.

NOTE.—The fact of carbide having become wet will be indicated by the outward appearance of the drum, and probably by a disagreeable odour, showing a leakage of gas.

27. *Precautions by vendor.*—(1) Every vendor of carbide delivering any quantity exceeding half a pound to any person, shall deliver it to him in a prescribed receptacle.

(2) No vendor shall open more than one receptacle at a time for the purpose of delivering carbide.

28. *Children.*—No person under the age of 15 years shall be employed in or allowed to enter any premises licensed under these rules.

CHAPTER V.

Manufacture of Acetylene Gas.

29. *Application of Chapter.*—(1) The rules in this Chapter shall be observed by every person holding a licence for the storage of carbide granted under these rules who uses such carbide for the manufacture of acetylene gas.

(2) In this Chapter, apparatus means any appliance for the manufacture of acetylene gas, including all generators and gas-holders and the devices for preventing the passage of oxygen into the acetylene supply pipes, the pipe lines and the other fittings.

30. *Construction of apparatus.*—(1) The apparatus shall be so constructed that lime sludge cannot gain access to any pipes intended for the passage of gas or the circulation of water.

(2) The use of glass in water gauges, sight boxes, etc., shall be avoided, but where glass is absolutely necessary as part of the apparatus it shall be effectively protected against fracture.

(3) The apparatus shall be so constructed that it is not possible, even by incorrect manipulation of cocks, to seal the generating chamber hermetically.

(4) The air-space in a generator shall be as small as is consistent with the proper working of the apparatus.

(5) No metal containing more than 80 per cent. of copper shall be present in any portion of the apparatus excluding the nozzles of the blow pipes.

(6) The various parts of the apparatus shall be of adequate strength to withstand any pressures that may be generated therein.

(7) The size of the pipes carrying the gas shall be proportioned to the maximum rate of generation, so that undue back pressure from throttling may not occur.

31. *Efficiency of apparatus.*—The apparatus shall have an efficiency of at least 90 per cent.

32. *Temperature of apparatus.*—The temperature of any part of the apparatus, when working, shall not exceed 180°F.

NOTE.—The temperature may be ascertained by placing short lengths of wire, drawn from fusible metal of a suitable melting point in those parts of the apparatus in which heat is liable to be generated.

33. *Pressure.*—(1) The apparatus used shall not be made to work at a pressure exceeding 60 inches water column:

Provided that, if it be shown to the satisfaction of the licensing authority that a higher pressure is necessary in any generating apparatus and that such higher pressure may be used without danger, the licensing authority may allow the use of higher pressure up to a maximum of 250 inches water column on the condition that the apparatus is fitted with suitable safety devices. A generator operating at a higher pressure than 60 inches water column shall have clearly marked on it the water column at which it works.

(2) In the use of the apparatus, regard shall be had to the danger of stoppage of passage of the gas and a consequent increase of pressure.

34. *Precautions against escape of gas.*—(1) Adequate precautions shall be taken to prevent any escape of gas from the apparatus.

(2) Gas-holders shall be fitted with blow off pipes carried up to a suitable point in the open air.

35. *Decomposition of carbide.*—(1) The carbide shall be completely decomposed in the apparatus, so that the lime sludge discharged therefrom shall not be capable of generating more gas.

(2) The apparatus shall give no tarry or other heavy condensation products from the decomposition of the carbide.

36. *Residue.*—(1) An open tank shall be provided in the open air for the reception of all residue from the carbide: and such residue shall remain for at least ten hours in not less than four times its bulk of water in such tank.

(2) Precautions shall be adopted for preventing any lime sludge from being discharged into the drains.

37. *Attendants.*—(1) No person shall have charge of an apparatus until he has been properly instructed in its management.

(2) A label or printed card giving fully detailed instructions in the vernacular as to the use of the apparatus and a certificate by the licensee to the effect that the attendant who shall be mentioned by name has been properly instructed as required by sub-rule (1), shall be exhibited on or in close proximity to the apparatus.

CHAPTER VI.

Licences.

38. *Application for licence.*—A person wishing to obtain or to renew a licence to store carbide under these rules shall submit an application in Form A to the authority empowered under rule 39 to grant such licence.

39. *Grant of licence.*—(1) Licences for storage may be granted by the licensing authorities set forth in Schedule I appended to these rules, in the Forms, for the purposes, and on payment of the fees, specified therein.

(2) Every licence granted or renewed under these rules shall remain in force until the 31st day of December of the year for which the licence is granted or renewed.

40. *Particulars of licence.*—Every licence granted under these rules shall be held subject to the conditions endorsed on it and shall contain all the particulars which are contained in the form prescribed for it by these rules.

41. *Power of licensing authority to alter conditions.*—(1) Notwithstanding anything contained in rule 40, the licensing authority may omit, alter or add to any of the conditions specified in the prescribed form of licence.

(2) This power shall not be exercised by the District Authority without the prior concurrence of the Chief Inspector.

42. *Amendment of licence.*—(1) Any licence granted under these rules may be amended by the authority granting such a licence provided that the amendments are not in conflict with any of these rules.

(2) A licensee who desires to have his licence amended shall submit it to the licensing authority with an application stating the nature of the amendment and the reasons for it.

(3) The fee for the amendment of a licence shall be one rupee *plus* the amount (if any) by which the fee that would have been payable if the licence had originally been issued in the amended form exceeds the fee paid for the original licence.

43. *Renewal of licence.*—(1) A licence may be renewed by the authority empowered to grant such a licence.

(2) Every application for the renewal of a licence shall be made not less than 30 days before the date on which the original licence expires, and, if the application is so made, the premises shall be held to be duly licensed until such date as the licensing authority issues the renewed licence or until an intimation that the renewal of the licence is refused has been communicated to the applicant.

(3) The same fee shall be charged for the renewal of a licence as for a new licence.

44. *Refusal of licence.*—(1) A licensing authority refusing to grant, amend or renew a licence, shall record his reasons for such refusal in writing.

(2) A copy of the order containing the reasons for such refusal shall be given to the applicant on payment of a fee of one rupee.

45. *Cancellation of licence.*—(1) Every licence granted under these rules shall be liable to be cancelled by the authority granting such a licence for any contravention of the Act, or of any rule made thereunder, or of any condition contained in such licence.

(2) The authority cancelling a licence shall record his reasons for so doing in writing.

(3) A copy of the order containing the reasons for the cancellation of a licence shall be given to the holder of the licence on payment of a fee of one rupee.

46. *Appeals.*—(1) Any person may appeal to the Governor General in Council from an order of the Chief Inspector refusing to grant, amend or renew a licence or cancelling a licence.

(2) Any person may appeal to the immediate official superior of the District Authority from an order of the District Authority refusing to grant, amend or renew a licence or cancelling a licence.

(3) Every appeal shall be in writing and shall be accompanied by a copy of the order against which the appeal is made.

(4) The appeal shall be presented within 30 days when the order appealed against has been passed by the District Authority and within 60 days when the order has been passed by the Chief Inspector.

47. *Transfer of licence for storage.*—(1) The holder of a licence for the storage of carbide may, at any time before the expiry of the licence, apply for permission to transfer his licence to another person.

(2) Such application shall be made to the licensing authority who shall, if he approves of the transfer, enter upon the licence, under his signature, an endorsement to the effect that the licence has been transferred to the person named.

(3) A fee of one rupee shall be charged on each such application.

(4) The person to whom the licence is so transferred shall enjoy the same powers, and be subject to the same obligations under the licence as the original holder.

48. *Procedure on death or disability of licensee.*—(1) If a licensee dies or becomes insolvent or mentally incapable or otherwise disabled, the person carrying on the business of such licensee shall not be liable to any penalty or confiscation under the Act or these rules for exercising the powers granted to the licensee by the licence during such time as may reasonably be required to allow him to make an application for a new licence in his own name for the unexpired portion of the original licence.

(2) A fee of one rupee shall be charged for a new licence for the unexpired portion of an original licence granted to any person applying for it under this rule.

49. *Loss of licence.*—Where a licence granted under these rules is lost or accidentally destroyed, a duplicate may be granted on payment of a fee of one rupee.

50. *Payment of fees.*—(1) Every application for the grant or renewal of a licence shall be accompanied by the fee payable thereon. If the licence is not granted or renewed, the fee shall be refunded.

(2) All fees chargeable under these rules in respect of licences granted by the District Authority shall be paid by means of impressed stamps or in cash.

(3) The payment of all other fees under these rules shall be made in cash or by cheque.

51. *Power to exempt from payment of fees.*—The Governor General in Council may, by general or special order, grant exemption from, or reduction of, any fee payable under these rules.

52. *Production of licence on demand.*—(1) Every person holding or acting under a licence granted under these rules shall produce it, or an authenticated copy of it, at the place to which the licence applies, when called upon to do so by any Inspector.

(2) Copies of any licence may, for the purposes of this rule, be authenticated free of charge by the authority which granted the licence.

SCHEDULE I.

Licences (vide Rule 39).

Article No.	Form of Licence. (See Schedule II.)	Purpose for which granted.	Authority empowered to grant licence.	Fee.	
1	2	3	4	5	
1	B	To store carbide in quantity not exceeding 250 pounds at any one time, provided the carbide is not to be used by the licensee for the generation of acetylene.	The District Authority.	(a) When the quantity to be stored does not exceed 1,000 pounds.	Rs. 4.
				(b) When the quantity to be stored exceeds 1,000 pounds but does not exceed 5,000 pounds.	Rs. 4 for the first 1,000 pounds *plus* annas 8 for every additional 1,000 pounds or part thereof.
2	C	To store carbide in all other cases.	The Chief Inspector.	(c) When the quantity to be stored exceeds 5,000 pounds but does not exceed 50,000 pounds.	Rs. 6 for the first 5,000 pounds *plus* Re. 1 for every additional 5,000 pounds or part thereof.
				(d) When the quantity to be stored exceeds 50,000 pounds.	Rs. 20.

SCHEDULE II.

FORMS.

FORM A.

(*See Rule 38.*)

Application for the grant/renewal of a licence to store Carbide of Calcium.

	The replies to be written in this column.
1. *Applicant's Name " Calling " Address	
2. Situation of building in which carbide is to be stored. Province District Town or village Locality	
3. Quantity of carbide proposed to be stored.	
4. Form in which license is required.	
5. Quantity of carbide already stored, if any, on the premises.	
6. Is the carbide for use or for sale unopened in the receptacles in which it is received, and, if not, what will be done with it ? In what receptacles will the carbide be kept, what is the capacity of the same, how are they closed against moisture, and of what material are they made ?	
7. In what part of the building will the carbide be kept ? How are the premises constructed ? Are the premises used for other purposes, and, if so, for what purposes ?	
8. Is the carbide to be used for the manufacture of acetylene gas ? How is the generator constructed and what is its capacity ? Give sketch. Give particulars as to the building in which the generator will be placed, and state whether it is detached from other buildings, and whether it is used for other purposes. How is it proposed to dispose of the residue ? Will the generator be in the sole charge of a person competent to manage it ?	
Remarks.	

Signature of applicant.

Postal address of applicant.

Date of application.

*In cases where the application is made on behalf of a company, the name and address of the company and the name of the manager or agents should be given.

FORM B.

(ARTICLE 1 OF SCHEDULE I.)

Licence to store Carbide of Calcium, not to be used by the licensee for generating acetylene gas, in quantity not exceeding 250 pounds at any one time.

No. Fee Rs.

Licence is hereby granted to

valid only for the storage of pounds of Carbide of Calcium in the building described below, subject to the provisions of the Petroleum Act, 1934, and the Carbide of Calcium Rules, 1937, and to the further conditions on the back of this licence.

This licence shall remain in force till the 31st day of December 19 .

The 19 . District Authority.

Description of the building referred to above.

Date of renewal.	Date of expiry.	Signature of licensing authority.

This licence is liable to be cancelled if the licensed premises when inspected are not found conforming to the description and conditions attached hereto and contravention of any of the rules and the conditions under which this licence is granted is also punishable with fine which may extend to five hundred rupees for a first offence and which may extend to two thousand rupees for any subsequent offence.

Conditions of licence.

1. If the licensing authority calls upon the holder of the licence, by notice in writing, to execute any repairs to the building licensed which may, in the opinion of such authority, be necessary for the safety thereof, the holder of the licence shall execute the repairs within such period, not being less than one week from the date of receipt of the notice, as may be fixed by the notice.

2. Subject to the provisions of rules 19(3) and 21, the licensee shall not deliver any quantity of Carbide of Calcium exceeding twenty-eight pounds to any one who has not a licence to store Carbide of Calcium or

any quantity of Carbide of Calcium exceeding half a pound, except in accordance with the rules as to the manner in which the Carbide is to be packed.

3. Only one receptacle containing Carbide of Calcium shall be opened at a time and only for the time necessary for the removal of the Carbide required or for the refilling of other receptacles. During such removal or refilling every reasonable precaution shall be adopted for preventing moisture being brought into contact with the Carbide of Calcium, as well as for guarding against the risk of ignition of any gas which may be liberated.

4. Every storage receptacle of a greater storage capacity than two pounds shall be secured with a lock or be kept in a locked receptacle, so as to prevent unauthorised persons having access to the contents.

5. Due precautions shall at all times be taken for the prevention of accidents by fire or explosion and no smoking, fire or artificial light or article capable of igniting acetylene shall be permitted at any time within or near the building in which the Carbide is stored.

6. Free access to the licensed premises shall be given at all reasonable times to any Inspector or sampling officer and every facility shall be afforded to an Inspector to ascertain that the rules and the conditions of this licence are duly observed and to a sampling officer to inspect and take samples for testing of any carbide.

7. Any accident, fire or explosion occurring within the licensed premises, which is attended with loss of human life or serious injury to person or property shall be reported to the nearest Magistrate or to the Officer-in-charge of the nearest Police Station immediately and by telegraph or telephone where such means of communication are available.

8. No acetylene gas shall be generated in the licensed building.

FORM C.

(ARTICLE 2 OF SCHEDULE I.)

Licence to store Carbide of Calcium.

No. Fee Rs.

Licence is hereby granted to
valid only for the storage of pounds of Carbide of Calcium at any one time in the building described below subject to the provisions of the Petroleum Act, 1934, and the Carbide of Calcium Rules, 1937, and to the further conditions on the back of this licence.

This licence shall remain in force till the 31st day of December 19

Chief Inspector of Explosives in India.

The *19* .

Description of the building referred to above.

Date of renewal.	Date of expiry.	Signature of licensing authority.

This licence is liable to be cancelled if the licensed premises when inspected are not found conforming to the description and conditions attached hereto and contravention of any of the rules and the conditions under which this licence is granted is also punishable with fine which may extend to five hundred rupees for a first offence and which may extend to two thousand rupees for any subsequent offence.

Conditions of licence.

1. If the licensing authority calls upon the holder of the licence, by notice in writing, to execute any repairs to the building licensed which may, in the opinion of such authority, be necessary for the safety thereof, the holder of the licence shall execute the repairs within such period, not being less than one week from the date of receipt of the notice, as may be fixed by the notice.

2. Subject to the provisions of rules 19(3) and 21, the licensee shall not deliver any quantity of Carbide of Calcium exceeding twenty-eight pounds to any one who has not a licence to store Carbide of Calcium or any quantity of Carbide of Calcium exceeding half a pound, except in accordance with the rules as to the manner in which the Carbide is to be packed.

3. Only one receptacle containing Carbide of Calcium shall be opened at a time and only for the time necessary for the removal of the Carbide required or for the refilling of other receptacles. During such removal or refilling every reasonable precaution shall be adopted for preventing moisture being brought into contact with the Carbide of Calcium, as well as for guarding against the risk of ignition of any gas which may be liberated.

4. Every storage receptacle of a greater storage capacity than two pounds shall be secured with a lock or be kept in a locked receptacle, so as to prevent unauthorised persons having access to the contents.

5. Due precautions shall at all times be taken for the prevention of accidents by fire or explosion and no smoking, fire or artificial light or article capable of igniting acetylene shall be permitted at any time within or near the building in which the Carbide is stored.

6. If Carbide of Calcium is used for the manufacture of acetylene gas, the following precautions for ensuring safety shall be adopted:—

(*a*) every apparatus for generating and storing acetylene gas other than a portable apparatus holding a charge of less than two pounds of Carbide shall be situate in an outbuilding, or in a suitable place in the open air;

(*b*) such apparatus shall be as far away as may be practicable from dwellings and, if in a building, such building shall be well ventilated and not used for any other purpose;

(*c*) no fire, flame or artificial light or article capable of igniting acetylene gas shall be taken into or near the building or place where the apparatus is situate;

(*d*) where an acetylene generator is used for oxy-acetylene welding or cutting, an efficient device shall be provided for preventing the passage of oxygen into the acetylene gas supply pipe; a separate device shall be provided for each blowpipe. Each such device must be kept in proper working order and shall be placed in a position, or be so protected that in the event of an explosion in the device, there would be no risk of injury to any person in the vicinity; and

(*e*) the rules relating to the manufacture of acetylene gas shall be observed.

7. Free access to the licensed premises shall be given at all reasonable times to any Inspector or sampling officer and every facility shall be afforded to an Inspector to ascertain that the rules and the conditions of this licence are duly observed and to a sampling officer to inspect and take samples for testing of any carbide.

8. Any accident, fire or explosion occurring within the licensed premises, which is attended with loss of human life or serious injury to person or property shall be reported to the nearest Magistrate or to the Officer-in-charge of the nearest Police Station immediately and by telegraph or telephone where such means of communication are available.

A. G. CLOW,

Secy. to the Govt. of India.

DEPARTMENT OF COMMERCE.

NOTIFICATIONS.

COMMERCE.

New Delhi, the 13th March 1937.

No. 25-C.(5)/37.—The services of Mr. S. N. Gupta, C.I.E., I.C.S., Indian Government Trade Commissioner at Hamburg, are replaced at the disposal of the Government of Bengal with effect from the 15th March 1937.

H. Dow,
Secy. to the Govt. of India (offg.).

TARIFFS.

New Delhi, the 20th March 1937.

No. 55-T. (1)/37.—In exercise of the powers conferred by sub-section (2) of section 3 of the Indian Tariff Act, 1934 (XXXII of 1934), the Governor-General in Council is pleased to direct that the following further amendments shall be made in the Ottawa Trade Agreement Rules, 1932, namely:—

In Forms A, AA and B of the Forms appended to the Fourth Schedule to the said Rules for the words "Right Honourable the Secretary of State for India in Council" and "said Secretary of State in Council" the words and brackets "Governor-General in Council (or, after the establishment of the Federation of India, the Governor-General of India)" shall be substituted.

M. SLADE,
Joint Secy. to the Govt. of India (offg.).

FINANCE DEPARTMENT.

RESOLUTION.

New Delhi, the 18th March 1937.

No. F. 7 (23)-R. 1./37.—The Governor-General in Council is pleased to direct that the following may be added as Note 1 under Part V (3)—Quarantine Leave—of the rules introduced with the Finance Department Resolution No. F. 7 (50)-R. I./33, dated the 7th December 1933, the existing Notes being renumbered accordingly:—

NOTE 1.—Cholera, small-pox, plague, diphtheria, typhus fever and cerebro-spinal meningitis may be considered as infectious diseases for the purpose of this rule. In the case of chicken-pox quarantine leave should not be sanctioned unless the Health Officer responsible considers that because of doubt as to the true nature of the disease, for example, small-pox, there is reason for the grant of such leave.

ORDERED that the Resolution be published in the *Gazette of India.*

J. C. NIXON,
Secy. to the Govt. of India.

FOREIGN AND POLITICAL DEPARTMENT.

NOTIFICATIONS.

New Delhi, the 18th March 1937.

No. 172-I. B.—In exercise of the powers conferred by sub-section (1) of section 109 of the Government of India Act, 1919, the Governor-General in Council is pleased to direct that the following further amendments shall be made in the notification of the Government of India in the Foreign and Political Department, No. 580-D., dated the 26th January 1917, namely:—

In the said notification—

1. Under the heading "By the High Court of Judicature at Fort William in Bengal in —" for the words "The States in the political control of the Government of Bengal" the words "The States in political relations with the Political Agent, Bengal States, in the Eastern States Agency, excluding the portions of the Mayurbhanj State occupied by the Gurumahisani Mines Extension and the Onlajori to Sulaipat-Badampahar Extension of the Bengal Nagpur Railway" shall be substituted.
2. Under the heading "By the High Court of Judicature at Allahabad in—" the words "The portions of the Patna State occupied by the Raipur-Vizianagram section of the Bengal Nagpur Railway" shall be omitted.
3. For the entry under the heading "By the High Court of Judicature at Patna in—" the following entry shall be substituted, namely:—

   "The States in political relations with the Political Agent, Orissa States, in the Eastern States Agency, and the portions of the Mayurbhanj States occupied by the Gurumahisani Mines Extension and the Onlajori to Sulaipat-Badampahar Extension of the Bengal Nagpur Railway."
4. Under the heading "By the High Court of Judicature at Nagpur in—" for the words "The States of Bastar, Changbhakar, Chhuikhadan, Jashpur, Kanker, Kawardha, Khairagarh, Korea, Nandgaon, Raigarh, Sakti, Sarangarh Surguja and Udaipur within the political charge of the Agent to the Governor-General, Eastern States," the following shall be substituted, namely:—

   "The States in political relations with the Political Agent, Chhattisgarh States, in the Eastern States Agency, excluding the portion of the Kalahandi State occupied by the Raipur-Vizianagram section of the Bengal Nagpur Railway."

B. J. GLANCY,
Political Secy. to the Govt. of India.

The 15th March 1937.

No. 150-X.—In exercise of the powers conferred by the Indian (Foreign Jurisdiction) Order in Council, 1902, and all other powers enabling him in that behalf, the Governor-General in Council is pleased:—

(1) to invest Mr. T. B. Jameson, I.C.S., District Judge, Darjeeling, Jalpaiguri and Dinajpur, with the powers of a Court of Session as described in the Code of Criminal Procedure, 1898 (Act V of 1898), to hear, within his territorial jurisdiction in British India, appeals in those cases arising in Sikkim in which the Governor-General in Council has jurisdiction except cases against European British subjects and persons jointly charged with European British subjects, and

(2) to direct that a person convicted by the said Mr. Jameson in the exercise of powers hereby conferred may appeal to the High Court of Judicature at Fort William in Bengal in the same manner and to the same extent as a person convicted by the Political Officer in Sikkim may appeal under Part I of the Notification of the Government of India in the Foreign and Political Department, No. 64-I., dated the 19th February 1929.

The 16th March 1937.

No. 152-G.—The Governor-General in Council is pleased to recognise provisionally the appointment of Mr. J. A. E. Evans as Acting Honorary Vice-Consul for Argentina at Calcutta.

The 18th March 1937.

No. 162-G.—Subject to the confirmation of His Majesty's Government, the Governor-General in Council is pleased to recognise the appointment of Mr. F. de M. Braganca as Vice-Consul for Brazil at Calcutta.

No. 164-G.—The Governor-General in Council is pleased to recognise the appointment of Mr. F. de M. Braganca as Acting Honorary Consul-General for Peru at Calcutta, during the absence of Mr. J. Gambetta.

H. A. F. METCALFE,

Foreign Secy. to the Govt. of India.

FINANCE DEPARTMENT (CENTRAL REVENUES).

NOTIFICATION.

CUSTOMS.

New Delhi, the 20th March 1937.

No. 20.—In exercise of the powers conferred by section 23 of the Sea Customs Act, 1878 (VIII of 1878), the Governor-General in Council is pleased to direct that the following further amendment shall be made in the notification of the Government of India in the Finance Department (Central Revenues), No. 33-Customs, dated the 22nd June 1935, relating to exemption of certain goods from customs duties or part thereof, namely:—

In the said notification, in Schedule I—Import Duties, under the head "A—General", for clause (*i*) in the second column against entry No. 6, the following clause shall be substituted, namely:—

"(i) apparatus for wireless reception [excluding apparatus specially designed for the reception of broadcast wireless and apparatus of the description specified in clause (ii)] and component parts of such apparatus, when imported under cover of (*a*) a certificate issued by the Director-General of Posts and Telegraphs to the effect that he is satisfied that the apparatus will not be used for the reception of broadcast wireless or (*b*) a certificate to the same effect issued by the Officer Commanding, Aircraft Depot, Royal Air Force (India), if the apparatus is imported by the Royal Air Force, and by the following officers, if imported for the Army:—

at Karachi, by the Embarkation Supply and Stores Officer, Kiamari,

at Bombay, by the Ordnance Officer, Bombay Depot,

at Calcutta, by the Embarkation Supply and Stores Officer at that port,

at Rangoon, by the Assistant Embarkation Supply and Stores Officer at the port, and

at other ports, by the Agent for Government Consignment concerned."

W. W. NIND,

Joint Secy. to the Govt. of India.

DEFENCE DEPARTMENT.

New Delhi, the 20th March 1937.

Part B.

NAVY BRANCH.)

APPOINTMENTS.

No. 188.—The services of Engr.-Lt.-Comdr. E. Whayman, R.I.N., are placed at the disposal of the Govt. of India, Dept. of Commerce, from the 26th Oct. 1936, for employment as offg. 4th Engineer and Ship Surveyor, Mercantile Marine Dept., Calcutta, with effect from the 4th Nov. 1936 and as 4th Engineer and Ship Surveyor, Mercantile Marine Dept., Calcutta, with effect from the 11th Feb. 1937, *vice* Engr.-Lt.-Comdr. A. B. Collins, R.I.N.

[D. D. (Navy Branch) Notn. No. 26, dated the 16th Jan. 1937, is cancelled.]

No. 189.—The services of Capt. C. R. Bluett, R.I.N., will continue to remain at the disposal of the Govt. of India, Dept. of Commerce, for employment as offg. Principal Officer, Mercantile Marine Dept., Calcutta, with effect from the 25th Jan. 1937 to the 24th Apl. 1937 inclusive and thereafter, as Principal Officer, Mercantile Marine Dept., Calcutta, *vice* Capt. L. W. R. T. Turbett, O.B.E., R.I.N.

No. 191.—The services of Comdr. J. Cameron, R.I.N., will continue to remain at the disposal of the Govt. of India, Dept. of Commerce, with effect from the 1st Feb. 1937, for employment as offg. Nautical Surveyor, Mercantile Marine Dept., Chittagong, from the 10th Feb. 1937, and as Nautical Surveyor, Mercantile Marine Dept., Chittagong, with effect from the 10th May 1937, *vice* Comdr. F. W. Angell, R.I.N.

CANTONMENTS—REGULATIONS.

No. 202.—The following draft of certain amendments which it is proposed to make in the draft rules published with the notification of the Government of India in the Defence Department No. 150, dated the 27th February 1937, is published as required by sub-section (1) of section 280 of the Cantonments Act, 1924 (II of 1924), for the information of all persons likely to be affected thereby, and notice is hereby given that the said draft will be taken into consideration on or after the 20th April 1937.

Any objection or suggestion which may be received from any person with respect to the draft before the said date will be considered by the Governor-General in Council :—

Draft amendments.

1. After rule 27 of the said rules, the following rules shall be inserted, namely:—

"28. Notwithstanding anything contained in these rules, the Governor-General in Council may appoint a Civilian who is serving as an Executive Officer immediately before the introduction of these rules, to be a member of the Service in such grade and on such rate of pay within the scale for the grade as may be determined by the Governor-General in Council in each case.

29. (1) A Civilian Executive Officer appointed to the Service under rule 28 shall be required to pass a departmental examination in accordance with the provisions of rule 8. Such officer shall be on probation until he has successfully passed the departmental examination.

(2) If at the end of two years from the date of appointment the officer has not successfully passed the departmental examination his services shall be dispensed with.

30. Notwithstanding anything contained in these rules the Governor-General in Council may appoint a Class II Executive Officer of the Cantonments Department to be a member of grade I of the Service.

31. The terms and conditions of service of an officer appointed to the Service under rule 30 shall be those set out in Appendix II to these rules. These rules shall, to such extent as they are not inconsistent with the terms and conditions of service set out in Appendix II, apply to all officers appointed to the Service under rule 30."

2. Rules 28, 29 and 30 of the said rules shall be re-numbered 32, 33 and 34, respectively.

3. After Appendix I to the said rules, the following Appendix shall be added, namely:—

"APPENDIX II.

TERMS AND CONDITIONS OF SERVICE FOR EXECUTIVE OFFICERS HOLDING THE VICEROY'S COMMISSION OR BELONGING TO THE INDIAN TERRITORIAL FORCE WHO ARE APPOINTED TO THE CANTONMENT EXECUTIVE OFFICERS SERVICE.

1. An Executive Officer appointed under these rules shall, if he has not already passed the departmental examination for officers of the Cantonments Department, be required to pass the departmental examination, the syllabus of which is prescribed in Appendix I, by the lower standard within two years from the date he was first appointed in an officiating capacity as an Executive Officer of the Cantonments Department and by the higher standard within a further period of one year. Failure to pass the examination within the prescribed period will entail removal from the Service. 30 per cent. of the total number of marks in each paper will be required to pass by the lower standard and 75 per cent. by the higher standard.

2. *Pay.*—He will receive Rs. 400 per mensem on first appointment rising by annual increments of Rs. 20 to Rs. 500. Service in the Cantonments Department will be reckoned as service for pay and increments of pay. Increments up to Rs. 500 per mensem will be sanctioned by the General Officer Commanding-in-Chief, the Command, subject to the recommendation of the Director, Military Lands and Cantonments. The salary of an officer appointed to the Selection Grade will be governed by rule 13.

3. An officer who has successfully passed the departmental examination will be required to retire from the army and will receive the honorary rank of Captain on the analogy of the provisions in paragraph 732 of the Regulations for the Army in India. The grant of honorary rank will not, however, entitle him to a higher rate of pay or pension than that provided in this appendix.

On retirement from the army, which will entail the relinquishment of his commission, he will assume civilian status and will be subject to all general regulations affecting civil

officers including the Government Servants' Conduct Rules. He will be ineligible to return to military duty at any future date. Retirement from the Army will not, however, affect him in any way as regards pay, pension, etc., as laid down in this appendix.

4. *Leave.*—His turlough and leave will be governed by the Civil Service Regulations from the date on which he was confirmed in the Cantonments Department or is appointed to the service provided that he has successfully passed the departmental examination.

5. *Pension.*—The pension of an officer recruited from the regular Indian Army will be:—

Rs. 200 per mensem provided that he has rendered

(1) 10 years combined departmental service in the Cantonments Department and the Cantonment Executive Officers Service, and

(2) 30 years, or, if invalided, 25 years, combined army and departmental service.

Note.—All service will count from 20 years of age, or from the first date of Army service irrespective of rank, whichever is later.

An Executive Officer who does not qualify for the above pension will be entitled, subject to the usual conditions of satisfactory service, to the ordinary pension he would have earned if he had remained in the Army, his service in the Cantonments Department and in the Cantonment Executive Officers Service counting as Army qualifying service for that pension.

An officer recruited from the Indian Territorial Force will not be entitled to any pension.

6. *Provident Fund.*—An officer recruited from the Indian Territorial Force will be required to subscribe to the Provident Fund in accordance with rule 19.

An officer recruited from the regular Indian Army shall not be entitled to subscribe to the Cantonment Provident Fund."

G. R. F. TOTTENHAM,

Secy. to the Govt. of India.

Registered No. C207

The Calcutta Gazette

THURSDAY, APRIL 1, 1937.

PART IB

Educational Notices.

Dacca Division.

Dacca, the 12th March 1937.

Award of Primary Preliminary Scholarships, 1936.

Each scholarship is of the value of rupees two per month and is tenable for two years from 1st January 1937.

(Twelve Government Primary Preliminary scholarships for backward classes.)

No.	Name of scholarship holders.	Name of school from which the candidate appeared.	Name of school in which the scholarship is tenable.
		Dacca district.	
1.	Dinendra Narayan Majumdar	Gutia Primary School	Gutia Primary School.
2.	Radha Raman Mallik	Baherak Primary School	Baherak Primary School.
3.	Suresh Chandra Maira	Raipura Practising School	Raipura Practising School.
		Mymensingh district.	
1.	Harendra Chandra Kaibarta Das	Kalduar Primary School	Kalduar Primary School.
2.	Birendra Chandra Kaibarta Das	Budhi Primary School	Budhi Primary School.
3.	Naresh Chandra Das	Ramanpur Primary School	Kishoreganj H. E. School.
		Faridpur district.	
1.	Sridhar Chandra Gain	Debagram Primary School	Gochapara M. E. School.
2.	Ramani Mohan Dhupi	Achura Bd. Primary School	Upasi H. E. School.
3.	Soneka Sundari Barai	Chhitkibari Primary School	Gopalganj Mission Girls' U.P. School.
		Bakarganj district.	
1.	Narendra Nath Mandal	Lakshmipura F. Primary School	Lakshmipura F. Final Primary School.
2.	Sarat Chandra Howladar	Bhawanipur Primary School	Bhawanipur Primary School.
3.	Madhusudan Haldar	Idilkati Bd. Primary School	Idilkati Bd. Primary School.

A. H. KHAN CHAUDHURY,

Inspector of Schools, Dacca Division.

Orders by the Executive Council of the University of Dacca, dated the 20th March 1937.

Ramna, Dacca, the 20th March 1937.

Preliminary B.L. Examination, January 1937.

The undermentioned candidates have passed the Preliminary B.L. Examination held in January 1937 :—

Roll No.	Name of Hall.	Names of candidates.
	FIRST CLASS.	
	(In order of merit.)	
11	Salimullah Muslim ..	Hasibuddin Ahmad.
	SECOND CLASS.	
	(In alphabetical order.)	
3	Dacca ..	Amalendu Sarkar.
4	Jagannath ..	Amarendranath Sen.
5	Dacca ..	Amulyabhushan Som.
6	Ditto ..	Amulyakumar Chaudhuri.
7	Jagannath ..	Atulchandra Rauth.
9	Salimullah Muslim ..	Fazlor Rahman Khan.
10	Dacca ..	Girindramohan Ganguli.
12	Ditto ..	Jagannath Saha.
14	Jagannath ..	Kanakranjan Deray.
16	Ditto ..	Manindranath Nag.
19	Dacca ..	Nikhileswar Basak.
20	Jagannath ..	Nitindranath Ray.
21	Salimullah Muslim ..	Obaidul Huq.
28	Dacca ..	Sudhirchandra Basu.
29	Salimullah Muslim ..	Talib Uddin.

Preliminary B.L. Supplementary Examination, January 1937.

The undermentioned candidates have passed the Preliminary B.L. Examination held in January 1937 :—

Roll No.	Name of Hall.	Names of candidates.
	WITHOUT CLASS.	
	(In alphabetical order.)	
30	Dacca	Binaykumar Pal.
31	Jagannath	Manindrachandra Das.
32	Dacca ..	Manindrachandra Pal.
33	Salimullah Muslim	Mohsen Uddin Ahmed.

The following candidates have failed in the subject or subjects noted against their names at the Preliminary B.L. Examination held in January 1937 and are entitled to appear in the subject or subjects at a Supplementary Examination under conditions laid down in the Ordinances and Regulations :—

Roll No.	Name of Hall.	Names of candidates.	Subjects.
17	Salimullah Muslim ..	Md. Abdul Kader ..	Constitutional Law and History of English Law.
22	Jagannath ..	Rabindranath Das ..	1. Hindu Law. 2. Constitutional Law and History of English Law.
26	Dacca ..	Sarojranjan Chatterjee ..	1. Jurisprudence. 2. Constitutional Law and History of English Law.

Final B. L. Examination, January 1937.

The undermentioned candidates have been admitted to the Degree of Bachelor of Law on the results of the Examination held in January 1937 :—

Roll No.	Name of Hall.	Names of candidates.
	FIRST CLASS.	
	(In order of merit.)	
45	Jagannath ..	Jnanabrata Ray.
54	Dacca ..	Sudhirchandra Chakrabarti.
50	Jagannath ..	Ranapati Bandyopadhyay.
47	Ditto ..	Makhanlal Chattopadhyay.
	SECOND CLASS.	
	(In alphabetical order.)	
34	Salimullah Muslim ..	Abdul Ghani.
36	Jagannath ..	Bhupendrachandra Chakrabarti.
37	Ditto ..	Bhupendranath Pal.
40	Dacca ..	Digendrakisor Chaudhuri.
41	Jagannath ..	Haralal Ghosh.
43	Dacca ..	Jatindrachandra Bardhan.
46	Ditto ..	Kumudendumohan Bandyopadhyay.
48	Jagannath ..	Praphullacharan Chakrabarti.
49	Ditto ..	Purnendukumar Ghoshraychaudhuri.
51	Ditto ..	Sibsankar Chakrabarti.
52	Dacca ..	Subodhchandra De.
55	Jagannath ..	Sudhirchandra Pal.

Final B. L. Supplementary Examination, January 1937.

The undermentioned candidate has passed the Final B. L. Examination held in January 1937 :—

Roll No.	Name of Hall.	Name of candidate.
	WITHOUT CLASS.	
57	Jagannath ..	Susilkumar Basu.

The following candidate has failed in the subjects noted against his name at the Final B. L. Examination held in August 1937 and is entitled to appear in the subjects at a Supplementary Examination under conditions laid down in the Ordinances and Regulations :—

Roll No.	Name of Hall.	Name of candidate.	Subjects.
53	Jagannath ..	Sudhansumohan Basu ..	1. Law of Real Property, Equity and Trusts. 2. Law of Transfer and Succession.

N. AHMAD, *Registrar*

Presidency and Burdwan Divisions.

Calcutta, the 19th March 1937

Corrigenda to the Results of the Girls' Primary Preliminary Scholarship Examination, 1936, published in the "Calcutta Gazette" of the 14th January 1937

In the district of Birbhum, Serial No. 2, under the column "School at which scholarship is made tenable" please *read* "Tantipara Hattola Boys' U. P. School" *for* "Tantipara Hattola Girls' School".

S. B. GUPTA,
Inspectress of Schools, Presidency and Burdwan Divisions

NOTIFICATION.

Calcutta, the 25th March 1937

In addition to the students whose names were published under this office notification, dated 18th December 1936, the following student is also declared to have passed the Junior Madrasah Examination held in November 1936:—

Muhammad Abdul Majid, Akra Junior Madrasah, district 24-Parganas—Second Division.

J. M BOTTOMLEY,
Director of Public Instruction, Bengal.

Education Department, Bengal.

NOTIFICATION.

Calcutta, the 12th March 1937.

Subject to the usual conditions of good conduct and satisfactory progress, the Kumud Kanta Memorial Scholarship of the value of Rs. 5 a month is awarded to Sibadas Roy who passed the Matriculation Examination of 1936 of Calcutta University from the Mymensingh Zilla School.

The scholarship is tenable for two years, with effect from the 1st June 1936, at the Ananda Mohan College, Mymensingh.

J. M. BOTTOMLEY,
Director of Public Instruction, Bengal.

Office of the Inspector of European Schools, Bengal.

NOTIFICATION.

Calcutta, the 23rd March 1937.

The following students are awarded the Higher Grade School Scholarships on the results of the Higher Grade Schools' Scholarship Examination held in December 1936. The scholarships will take effect from 1st January 1937, for four years:—

Two special scholarships of Rs. 24 a month each.

1 Gordon Fergus Clair Maitland—St. Vincent de Paul's School, Asansol

2 Robert George Welner—St. Vincent de Paul's School, Asansol.

Four ordinary scholarships of Rs. 12 a month each.

1 Gilbert Godfrey Grant Bull—St. Andrew's Colonial Homes, Kalimpong.

2 Florrie Fernandez (Miss)—Loreto Day School, Bowbazar, Calcutta.

3 Peter Robin Halliday—St. Andrew's Colonial Homes, Kalimpong.

4 Douglas Hugh Baily—St. Thomas' Boys' School, Calcutta.

H. THOMAS,
Inspector of European Schools, Bengal.

Calcutta University.

Senate House, the 22nd March 1937.

NOTICE.

The next I. E. and B. E. Examinations will commence on the following dates:—

Monday, 6th September 1937.

I. E., Section A
B. E., Non-Professional Section.

Wednesday, 8th September 1937.

I. E., Section B.
B. E., Professional Section.

Applications and fees for admission to the above examinations must reach the office of the Controller of Examinations not later than Friday, the 20th August 1937.

B. B. DUTT,
Controller of Examinations.

Registered No. C207

The Calcutta Gazette

THURSDAY, APRIL 1, 1937.

PART II

Advertisements.

Notices.

Advertisements, Notices, etc., intended for insertion in this part of the Gazette must be sent to Press before 12 noon on Saturday, and all costs deposited and proofs returned by 4 p.m. on Monday. Manuscripts and postal remittances must be addressed to Superintendent, Government Printing (Publication Branch), Bengal Government Press, Alipore.

For the convenience of advertisers located in Calcutta, arrangements have been made to accept advertisements and prepayment of charges at Sales Office, Ground Floor, Writers' Buildings, Calcutta. The latest time for receipt of advertisements for current week's Gazette has been extended till 4 p.m. on Mondays.

Land Sale Notices.

NOTICE is hereby given, under section 6, Act XI of 1859, that the undermentioned estate in the district of Jalpaiguri will be put up for sale at the office of the Collector of that district on the 4th May 1937, at 12 noon, for arrears of revenue (and other demands which by law are realizable as arrears of land revenue):—

Tauzi No.	Name of mahal and pargana.	Sadar jama of whole estate.	Whether the whole estate is to be sold	If only a share is to be sold, specification of such share or shares	Names of proprietors of property to be sold.	If only a share is to be sold, the sadar jama of such share.	If the whole estate is to be sold, the arrears due from it.	If only a share is to be sold, the arrears due from it.
1	2	3	4	5	6	7	8	9
		Rs a p					Rs. a p.	
84	Pergana Chengmari, mauza Gochi Mari, jote No. 842.	1,008 4 0	Whole	....	Baman Singh Kathan and others.	..	300 0 0	..

This jote is being advertised for sale for instalments of revenue which were due on or before the 28th February 1936, of which the latest date of payment was 28th March 1936.

J. C. MAZUMDAR, *for* Deputy Commissioner.

Jalpaiguri, the 20th March 1937.

NOTICE is hereby given, under section 6, Act XI of 1859, that the undermentioned estate in the district of Jalpaiguri will be put up for sale at the office of the Collector of that district on the 4th May 1937, at 12 noon, for arrears of revenue (and other demands which by law are realizable as arrears of land revenue)—

Tauzi No.	Name of mahal and pargana.	Sadar jama of whole estate.	Whether the whole estate is to be sold.	If only a share is to be sold, specification of such share or shares.	Names of proprietors of property to be sold.	If only a share is to be sold, the sadar jama of such share.	If the whole estate is to be sold, the arrears due from it.	If only a share is to be sold, the arrears due from it.
1	2	3	4	5	6	7	8	9
		Rs. a. p.					Rs. a. p.	
84	Pargana Chengmari, mauza Uttar Majgram, jote No. 710.	540 0 0	Whole	....	Pran Nath Saha, Dhanli Bewa and others.	..	759 1 0	..

This jote is being advertised for sale for instalments of revenue which were due on or before the 28th February 1934, 28th February 1935, 30th November 1935, 28th February 1936, and 30th November 1936, of which the latest dates of payment were 28th March 1934, 28th March 1935, 12th January 1936, 28th March 1936 and 12th January 1937, respectively.

J. C. MAZUMDAR, *for* Deputy Commissioner.

Jalpaiguri, the 20th March 1937.

SUMMONS FOR DISPOSAL OF SUIT.

(Order V, rules 1 and 5, Code of Civil Procedure.)

In the Court of the Third Officer at Deoghar, Santhal Parganas.

MONEY SUIT No. 420 OF 1936.

To Joharmal Marwari, (2) Ghasiram Marwari and (3) Ramrichhpal Marwari of 5/1, Muktaram Babu's Street, Calcutta.

WHEREAS Bhajanlal Kosardeo, a firm carrying on business at Deoghar, has instituted a suit against you for Rs. 174-1, you are hereby summoned to appear in this Court in person or by a pleader duly instructed, and able to answer all material questions relating to the suit or who shall be accompanied by some person able to answer all such questions on the 9th day of April 1937, at 6-30 a. m., to answer the claim; and as the day fixed for your appearance is appointed for the final disposal of the suit, you must be prepared to produce on that day all the witnesses upon whose evidence and all the documents upon which you intend to rely in support of your defence.

Take notice that, in default of your appearance on the day before mentioned, the suit will be heard and determined in your absence.

Given under my hand and the seal of the Court, this 8th day of March 1937.

A. MUHAMMAD, Deputy Collector.

Deoghar, the 20th March 1937. (664—2)

In the High Court of Judicature at Fort William in Bengal, in Insolvency.

NOTICE OF ADJUDICATION ORDER.

No. 25 of 1937.

Re Noni Bhusan Dutt, residing at No. 58, Lower Circular Road, in the town of Calcutta, resident medical officer of Taltola Charitable Dispensary (Calcutta Corporation) situated at No. 58, Lower Circular Road, in Calcutta aforesaid, ex parte the debtor.

J. K. Sircar, debtor's solicitor.

ON the 17th day of March 1937 an order was made by the High Court of Judicature at Fort William in Bengal in its insolvency jurisdiction adjudging the abovenamed as an insolvent.

Note.—All debts due to the estate should be paid to me.

Dated this 19th day of March 1937.

S. C. H. MEYER, Official Assignee.

In the Court of the District Judge of Bogra.

INSOLVENCY CASE No. 11 OF 1935.

TAKE notice that the applicant Monsarulla Shaik, son of late Meghu Shaikh, of Shutrapur, police-station and district Bogra, who was adjudged insolvent on 18th December 1935 by order of this Court, has applied to this Court for his discharge, and that the Court has fixed 8th April 1937 for hearing of the application.

Dated this 22nd day of March 1937.

S. C. MUKHERJI, Ex-officio Registrar.

(675—1)

In the Court of the District Judge of Faridpur.

INSOLVENCY CASE No. 32 OF 1937.

(1) Monomohan Saha, son of late Suk Sagar Saha, and (2) Debendra Chandra Saha Tahabildar, son of late Prolhad Chandra Saha Tahabildar of Krishnardangi, police-station Nagarkanda, district Faridpur, creditor-petitioners,

versus

(1) Sheik Budhai and (2) Sheik Dhonai, sons of late Sheik Sahardi of Char Sultanpur, police-station Char Bhadrasan, district Faridpur, debtors-opposite party.

NOTICE is hereby given that the abovenamed creditor-petitioners have applied to this Court to have the debtors-opposite party adjudged insolvents and that the 20th April 1937 has been fixed for the hearing of the application.

K. B. ROY, District Judge.

Faridpur, the 22nd March 1937.

(676—1)

In the Court of the District Judge of Hooghly.

NOTICE is hereby given, under clause (2) of section 12 of the Provincial Insolvency Act, V of 1920, to his creditors that the insolvency petition of Phakir Chandra De, son of late Mati Lal De, of Haripal, thana Haripal, district Hooghly, has been admitted by this Court as No. 25 of 1937, and that the 24th April 1937 has been fixed for the hearing thereof.

S. MUKHERJEE, District Judge.

Chinsura, the 18th March 1937.

(669—1)

In the Court of the District Judge of Hooghly.

NOTICE is hereby given, under clause (2) of section 41 of the Provincial Insolvency Act, V of 1920, to his creditors that the final discharge petition of Surendra Nath Khamaru, son of late Bhusan Chandra Khamaru, of Sergoria, thana Pandua, district Hooghly, has been filed in this Court in Insolvency Case No. 35 of 1936, and that the 1st May 1937 has been fixed for the hearing thereof.

S. MUKHERJEE, District Judge.

Chinsura, the 22nd March 1937. (684—1)

In the Court of the District Judge of Hooghly.

INSOLVENCY PETITION No. 12 OF 1937.

NOTICE is hereby given that Kalipada Adak, son of late Mahendra Nath Adak, of Sahapur, thana Tarakeswar, district Hooghly, was on the 13th day of March 1937 adjudged an insolvent. The 13th day of May 1937 has been fixed for framing a schedule and creditors are required to prove their claims on that day.

S. MUKHERJEE, District Judge.

Chinsura, the 22nd March 1937. (685 - 1)

In the Court of the District Judge of Jalpaiguri.

INSOLVENCY CASE No. 6 OF 1936.

Lakhmichand Agarwala of Jalpaiguri town, insolvent.

TAKE notice that the aforesaid insolvent has applied to this Court for discharge, and that the Court has fixed 5th April 1937 next for hearing thereof.

S. K. MITRA, Registrar, for District Judge.

Jalpaiguri, the 22nd March 1937. (682—1)

NOTICE TO CREDITORS OF APPLICATION FOR DISCHARGE.

Section 41 (1) of the Provincial Insolvency Act, V of 1920.

In the Court of the District Judge at Midnapore.

INSOLVENCY CASE No. 17 OF 1936.

Sasi Bhusan Bera and Nisi Bhusan Bera, sons of late Nilmani Bera, of Naranga, pargana Kasijora, thana Panskura, district Midnapore, applicants.

TAKE notice that the abovenamed insolvents have applied at the Court for their discharge, and that the Court has fixed the 17th day of April 1937 at 6 o'clock for hearing the application.

Dated this 20th day of March 1937.

S. K. HALDAR, District Judge.

(673—1)

In the Court of the District Judge of Mymensingh.

INSOLVENCY CASE No. 8 OF 1937.

NOTICE is hereby given that Nagar Bashi Saha, son of late Bhuban Mohan Saha, of village Babnapara, police-station Nagarpur, district Mymensingh, has on 2nd March 1937 applied to this Court for being adjudicated as insolvent, and that the 10th day of April 1937 has been fixed for hearing of the said application.

S. M. MASIH, District Judge.

Mymensingh, the 20th March 1937. (671—1)

NOTICE OF DISCHARGE.

Section 41 (1) of the Provincial Insolvency Act V of 1920.

INSOLVENCY CASE No. 35 OF 1935.

NOTICE is hereby given that insolvent Hari Bondhu Chakraverty, son of late Ram Sundar Chakraverty, of Dariapur, police-station Shahazadpur, district Pabna, has applied for final discharge, and the 19th April 1937 has been set down for hearing of the application.

S. N. MODAK, District Judge.

Pabna, the 18th March 1937.

(670—1)

In the Court of the District Judge of 24-Parganas.

INSOLVENCY CASE No. 8 OF 1937.

Basanta Kumar Bhattacharjee of 33, Ultadingi Road, Entally, 24-Parganas, applicant.

To Gurugovinda Mitra of Pabna, Pabna, and others, creditors.

ON the 17th day of March 1937 it was ordered that the matter of the petition of the applicant be heard on the 19th day of April 1937, and that the said applicant do attend to be examined by this Court on that date.

M. H. B. LETHBRIDGE, District Judge.

Alipore, the 20th March 1937.

(674—1)

MR. MAHIMA RANJAN BHATTACHARYYA, M.A., B.L., intends to be enrolled as an Advocate, High Court.

(509—4)

SATYENDRA NATH BANERJEE, M.A., B.L., intends to be enrolled as an Advocate, High Court.

(547—4)

MR. GURU PRASANNA GHATAK, B.L., intends to be enrolled as an Advocate of the Calcutta High Court.

(552—4)

MR. AMAL KUMAR MUKERJI intends to be enrolled as an Advocate of the High Court, Calcutta.

(567—4)

MR. MADAN CHANDRA GHOSE intends to be enrolled as an Advocate of the Calcutta High Court.

(665—4)

RASH BEHARI MAZUMDAR intends to enrol himself as an Advocate of the High Court, Calcutta.

(686—4)

Draft Advertisement.

APPLICATIONS are invited from Muslim candidates for appointment as Professor of Philosophy and Logic in the Bengal Educational Service (Men's Branch) on Rs. 150—25—200—50/2—300—40/2—500—50/2—700) (efficiency bars after the 12th and 20th stages). The selected candidate will be appointed on probation for two years.

2. Applicants must:—

(i) be British subjects or subjects of a State of India,

(ii) not be over 45 years of age,

(iii) possess high academic qualifications in Philosophy and Logic and a satisfactory record of teaching experience,

(iv) furnish with their applications documentary proofs of their qualifications, teaching experience and age; also two certificates written not more than one year prior to the dates of their applications from two responsible persons not related to them testifying to their private character and stating that they are natural born British subjects or subjects of a State in India; these certificates must be in addition to any furnished from persons connected with their Colleges or Universities.

3. Canvassing in any form (direct or indirect) will be considered a disqualification.

4. Applications must be submitted to the Assistant Director of Public Instruction, Bengal, Writers' Buildings, Calcutta, on or before 15th April 1937.

Draft Advertisement.

1. APPLICATIONS are invited for 26 posts of Inspectors and 40 posts of Auditors of Co-operative Societies. The pay of an Inspector is Rs. 125—5/2—130—10/2—150—15/2—180—10/2—250 (E.B. after 10th stage). The post is permanent and pensionable. The pay of an Auditor is Rs. 75—3/2—84—4/2—100—5/2—130 (E.B. after 12th stage) and the post is permanent with benefits of Contributory Provident Fund in lieu of pension. Candidates for Inspector's post must have passed at least the B.A. or B.Sc. of any equivalent examination of an Indian University while those for Auditors must have passed the I.A. or I.Sc. or any equivalent examination of the same. Selected candidates will be required to undergo practical training for a period of not less than four months and thereafter a theoretical training at the training class for four months in the case of Inspectors and three months in the case of Auditors, and shall have to pass the required competitive examination before actual appointment on probation. During the training period candidate Inspectors will receive a subsistence allowance of Rs. 65 per mensem and candidate Auditors Rs. 45 per mensem. From the date of their appointment they will remain on probation for a period of two years during which period they will receive the minimum pay of their respective time-scale and will have to pass the Departmental Examination by both standards.

Applications must contain the following particulars:—

1. (1) Name of the candidate and his age on 1st April 1937 (which should not ordinarily exceed 25 years),

(2) Father's name and occupation.

(3) Place of residence including district, etc.

(4) Caste.

(5) A statement of educational qualifications to be supported by copies of University certificates.

2. Every candidate must furnish certificates written not more than one year prior to the date of his application from two responsible persons not related to the candidate nor connected with him by marriage, testifying to his private character; these certificates must be in addition to any furnished from persons connected with his college or university.

3. Candidates not already in Government service shall upon selection be required to attend before a Medical Board or a Medical Officer in charge of civil station and submit certificate similar to that prescribed for candidates for a provincial service.

4. No person will be eligible for appointment who has endeavoured to enlist for his candidature the support of persons of influence or of officials of Government. Spontaneous recommendations from persons interested in, or otherwise known to, the candidate will be disregarded.

5. The application will be received by the undersigned up to 21st April 1937.

A. M. ARSHADALI,

Registrar of Co-operative Societies, Bengal.

P.S.—No application form will be supplied by office to any intending candidate.

Public Service Commission (India).

APPLICATIONS are invited from British subjects for the post of Second Engineer Officer on board the Indian Mercantile Marine Training Ship "Dufferin." (2) Post permanent and non-pensionable. Probation, one year. Services terminable by notice. (3) Pay. Rs. 400-25-525 plus a messing allowance of Rs. 2 per diem (allowance subject to the usual emergency cut of 12½ per cent.). (4) On confirmation, eligible to Contributory Fund (India) with retrospective effect. (5) Qualifications: Possession of a First Class Certificate of Competency as Engineer (Steam or Motor) issued by the Board of Trade, the Government of India or a Colonial Government. Teaching experience is also desirable but not essential provided a candidate has satisfactorily completed a full course in marine or mechanical engineering (day or evening classes) at a recognised Technical College. This will be the minimum acceptable standard of education. (6) No age limits prescribed. (7) Government servants eligible if permitted to apply by their departments. (8) Canvassing in any form will disqualify. (9) Last date for the receipt of applications, which must be on the prescribed form, 27th April 1937. Prescribed application forms and further particulars may be obtained from the Secretary, Public Service Commission. Requisitions should be addressed to Delhi if they can reach there before the 10th April 1937, and thereafter to Kennedy House Annexe, Simla. Applicants for forms must mention the name of the post.

Delhi, the 22nd March 1937.

(688—1)

Public Service Commission (India).

APPLICATIONS are invited for the post of Chemist for the Sugar Research and Testing Station, Bilari, district Moradabad (United Provinces). Post on the non-Government research staff of the Imperial Council of Agricultural Research. (2) Post temporary and for a period of three years in the first instance. Probation six months. Post also non-pensionable. (3) Pay—Rs. 300—25—500. (4) Qualifications—(A) Essential: (i) A degree in Chemistry or in Agriculture with Chemistry. (ii) Either, a training in Sugar Chemistry at the Harcourt Butler Technological Institute, Cawnpore, or in other recognised institutions providing post-graduate instruction in Sugar Chemistry or Technology, or, two years' experience in a sugar factory as Manufacturer and Chemist. (B) Desirable in addition: (i) A high degree in Chemistry and some research experience. (ii) A knowledge of plant and processes employed in indigenous sugar manufacture and "gur" making. (5) Age between 30 and 45 years. (6) Must be a British Subject of Indian domicile. (7) Government servants eligible if permitted to apply by their departments. A Government servant, if appointed, will be treated as on foreign service. Pension and leave contributions borne by the Imperial Council of Agricultural Research. Eligible to subscribe to General Provident Fund, if permissible under the General Provident Fund Rules. Travelling allowance governed by Supplementary rules. Increase in pay will not exceed 25 per cent. of his pay in Government service from time to time. (8) Canvassing in any form will disqualify. (9) Last date for receipt of applications, which must be on the prescribed form, 20th April 1937. Prescribed application forms and further particulars may be obtained from the Secretary, Public Service Commission. Requisitions should be addressed to Delhi if they can reach there before the 10th April 1937, and thereafter to Kennedy House Annexe, Simla. Applicants for forms must mention the name of the post.

Delhi, the 18th March 1937. (683—1)

Public Service Commission (India).

APPLICATIONS are invited for the posts of Professor of Sugar Engineering and of Additional Assistant Professor of Sugar Chemistry at the Imperial Institute of Sugar Technology, Cawnpore. (2) Posts non-pensionable and temporary for five years. Service terminable by six months' notice. Probation one year. (3) (a) Professor of Sugar Engineering:—Pay Rs. 1,000—50—1,200 plus £30 sterling overseas pay for candidate of non-Asiatic domicile. Candidates, who should preferably be not over 45 years of age, must be natural-born British subjects and the children of British subjects. They must possess a First Class Board of Trade certificate in Mechanical or Marine Engineering (or an equivalent qualification) and must have at least five years experience of designing sugar machinery in firms of repute. Preference to a candidate possessing an Honours degree in Science, an equivalent qualification in Mechanical or Electrical Engineering, a higher diploma of a recognised institution or practical experience of the manufacture, erection and operation of sugar machinery. (b) Additional Assistant Professor of Sugar Chemistry:—Pay Rs. 325—25—650—Efficiency Bar—35—1,000. Candidate must be British subjects of Indian domicile and preferably not over 35. Qualifications:—(I) Essential—(i) Honours degree in Science, with chemistry as principal subject, (ii) specialised post-graduate training in organic chemistry and (iii) Evidence of ability to carry out and direct independent research in organic chemistry. (II) Additional:—(i) A D.Sc. degree or a post-graduate qualification in chemical engineering and (ii) experience of research in sugar chemistry. (4) Government servants eligible if permitted to apply by their Departments. (5) Canvassing, in any form, will disqualify. (6) Last date for receipt of applications, which must be on the prescribed form, 25th May 1937. Prescribed application forms and further particulars may be obtained from the Secretary, Public Service Commission, Delhi, up to 10th April 1937, and thereafter Simla. Applicants for forms must mention the name of the post.

Delhi, the 19th March 1937.

(668—1)

IT is hereby notified for general information that the next ordinary examination of candidates for Certificates of Competency as Masters and Serangs of Inland Steam Vessels under Act I of 1917 will be held at the Port office, Chittagong, on Tuesdays, the 20th April, 11th May and 15th June 1937, at 10-30 a.m.

Application for examination for any of the above grade certificates must be made at the Port office, Chittagong, not later than three days prior to the date of examination the candidates producing their certificates and testimonials and paying the fees.

J. CAMERON, Commander, R. I. N.,
Nautical Surveyor, Chittagong.

Chittagong, the 18th March 1937.

TO whomsoever it may concern, the following notice is hereby given that the Hon'ble Board of Revenue, Bengal, has by its order No. 822W., dated the 14th January 1937, declared Srijukta Indumati Devi Choudhurani, widow of late Babu Birendra Chandra Roy Choudhury, a disqualified proprietress of the Dhankora Court of Wards Estate No. I, Dacca, and has retained charge and is managing all her properties, moveable or immovable. No payment by any bank, company, corporation or any person should henceforth be made to her and all payments should be made to me on her behalf as her Manager under the Court of Wards. Any payment made to her will be at his own risk.

N. C. SEN, Manager,
Dhankora C. W. Estate No. I.

Banglabazar, Dacca, the 25th February 1937.

(666—3)

NOTICE is hereby given to all whom it may concern that the partnership business known as Messrs. S. Roomy and Co., otherwise called Messrs. S. Mohammad Amin Fazal Karim and Co., of 75/1A, College Street, Calcutta, was dissolved and all the assets and liabilities thereof vested solely and absolutely in Haji Mohkamdin and the undersigned ceased to have any connection or concern whatsoever with the same since 20th September 1934.

It is furthermore notified that according to the terms of the award of Arbitrators, dated 30th January 1937, the partnership business known as the Punjab Motor Stores, Dehra Dun, was dissolved and all the assets and liabilities thereof vested solely and absolutely in the undersigned and the other partners, viz., Haji Mohkamdin and Khowaja Ghulam Nabi abovementioned ceased to have any connection or concern whatsoever with the same.

KHOWAJA MOHAMMAD AMIN AHMADI,
KHOWAJA FAZAL KARIM AHMADI,
Sole Proprietors, Messrs. The Punjab Motor Stores and its Branch, Dehra Dun.

Dated the 10th February 1937. (370—1)

The Bengal and Madras Service Family Pension Fund which is provisionally managed and assisted by Government has for its object the provision of monthly pensions for the maintenance of the widows and children of subscribers and is open, with certain exceptions, to all active and pensioned members of the Uncovenanted service of Government (except those serving under the Government of Bombay), and to Local Fund servants earning pensions from Government. Some of the special features of the fund are (1) that widowed daughters incapable of re-marriage or children labouring under such mental or bodily infirmities as incapacitate them from earning their livelihood or preclude the possibility of marriage (in case of a daughter) are admitted to its benefits; and (2) that subscribers to the Widows' and Daughters' branches are entitled to a refund of 30 per cent. of the premia paid, should the nominee predecease them after five years of admission. The second quinquennial valuation of the Fund has been completed by the Actuary to the Government of India, and his report discloses very favourable results. For forms of application and rules of the Fund apply to the Accountant-General, Bengal, Imperial Secretariat Buildings, Calcutta.

Imperial Bank of India.

THE following appointment on the Bank's Staff is hereby notified:—

Mr. J. L. Bagga, Staff Assistant, to be Agent, Howrah Branch, as from the 21st February 1937, *vice* Mr. L. P. Kichlu.

B. A. C. NEVILLE, Secretary and Treasurer.

Calcutta, the 25th March 1937.

(687—1)

Road Cess Notification.

THE Rajshahi district board at their special meeting held on the 27th February 1937 resolved, under section 46 of the Local Self-Government Act, to levy road cess during the year 1937-38 at the maximum rate of six pies in the rupee on the annual value of lands, etc.

KUMAR PRATIVA NATH RAY, Chairman.

Rajshahi, the 19th March 1937.

(667—1)

Road Cess Notification.

THE district board, 24-Parganas, at a special meeting held on the 19th March 1937, has resolved to fix the rate of road cess to be levied during the year 1937-38 at the maximum rate of half anna on the annual valuation of lands, etc., as enjoined in the Cess Act.

Rai JOGESH CHANDRA SEN Bahadur,
Chairman, District Board.

Alipore, the 22nd March 1937.

(672—1)

Lost.

THE Government Promissory Note No. 113985 of the 3 per cent. loan of 1896-97 for Rs. 500, originally standing in the names of Asha Kumari Debi and Santi Kumari Debi or either of them, the proprietresses by whom it was never endorsed to any other person having been lost, notice is hereby given that payment of the above note and the interest thereupon have been stopped at the Public Debt Office, Reserve Bank of India, Calcutta, and that application is about to be made for the issue of duplicate in favour of the proprietresses. The public are cautioned against purchasing or otherwise dealing with the abovementioned security.

Signature of the advertisers—Asha Kumari Debi and Santi Kumari Debi.

Residence—Jemo, Kandi post office, Murshidabad.

(642—3)

Lost.

A RECEIPT numbered 402, dated 19th August 1936, and granted by the Imperial Bank of India, Local Authorities Loan Section, on submission of the undermentioned Howrah Bridge Allotment Certificate. Notice of loss has been given to the Imperial Bank of India, Local Authorities Loan Section, and the undersigned is about to apply for the surrender of the security:—

Howrah Bridge Allotment Certificate No.	Loan.	Amount.	Holder's name.
		Rs.	
824	3½ per cent., 1936.	5,000	Baldeoram Beharilall.

Name of the proprietor—Baldeoram Beharilall.

Residence—49, Strand Road, Calcutta.

(638—1)

Lost.

A RECEIPT numbered 413, dated 19th August 1936, and granted by the Imperial Bank of India, Local Authorities Loan Section, on submission of the undermentioned Howrah Bridge Allotment Certificate. Notice of loss has been given to the Imperial Bank of India, Local Authorities Loan Section, and the undersigned is about to apply for the surrender of the security:—

Allotment Certificate No.	Loan.	Amount.	Holder's name.
		Rs.	
486	3½ per cent. New Howrah Bridge Loan, 1936.	5,000	Umapada Roy.

Names of the proprietors—Minors Gobindadas Roy and Gouradas Roy through their next friend and mother and guardian Sarjubala Roy.

Residence—Nutangunj, Burdwan.

(661—1)

In the matter of the Indian Companies Act, VII of 1913, and

In the matter of Normal Insurance Company, Ltd. (in liquidation).

NOTICE is hereby given that Normal Insurance Co., Ltd., has been wound up voluntarily under section 203 of Indian Companies Act by special resolution of members passed on 28th January 1937. And the said resolution was confirmed on 12th February 1937. And Mr. Anadi Mukerjee of 2/1, Dehi Serampur Road, Entally, has been appointed as liquidator.

AMARENDRA NATH MITTRA, Chairman.

2/1, Dehi Serampur Road, Entally, Calcutta, the 17th March 1937.

(649—1)

In the matter of the Indian Companies Act, 1913, and

In the matter of the Tippera Workers' Union, Ltd., Comilla, Tippera.

AT an extraordinary general meeting of the abovenamed Company duly convened and held at Comilla on 7th February 1937 and confirmed on 6th March 1937, the resolution mentioned below was passed and confirmed as a special resolution:—

Resolved that it has been proved to the entire satisfaction of this meeting that the Company cannot by reason of its liabilities continue its business and that it is advisable to wind up the same and accordingly that the Company be wound up voluntarily and Mr. Adinath Datta of Comilla be and is hereby appointed liquidator for the purpose of such winding up and that his remuneration be fixed at a total amount of Rs. 150 only.

S. N. DAS GUPTA, Chairman.

Comilla, the 18th March 1937. (677—1)

In the matter of the Indian Companies Act, 1913, and

In the matter of the Tippera Workers' Union, Ltd., Comilla, Tippera (in voluntary liquidation).

NOTICE is hereby given pursuant to section 209 of the Indian Companies Act, 1913, that a meeting of the creditors of the abovenamed Company will be held at the office of the Company at Monoharpur, Comilla, on Sunday, the 4th April 1937, at 6 p.m.

A. N. DATTA, liquidator.

Comilla, the 18th March 1937. (678—1)

In the matter of the Indian Companies Act, VII of 1913,

and

In the matter of Bengal Reversionary Trust and Investment Company, Ltd. (in liquidation).

NOTICE is hereby given that at an extraordinary general meeting of the shareholders of the abovenamed Company held at the registered office of the Company, B4, Clive Buildings, Calcutta, on Tuesday, the 23rd March 1937, the resolution below mentioned was passed as a special resolution, namely:—

That it is desirable to wind up the Company and accordingly that the Company be wound up voluntarily and that Mr. Wilfred John Younie and Mr. George Reid Crooks of B4, Clive Buildings, Calcutta, be and they are hereby appointed liquidators of the Company for the purpose of such winding up with joint and several powers at such remuneration (if any) as may be agreed between them and the Directors of the Company.

W. J. YOUNIE, Chairman.

Calcutta, the 23rd March 1937. (679—1)

In the matter of the Indian Companies Act, VII of 1913,

and

In the matter of the Indo-Burma Tin Corporation, Limited (in voluntary liquidation).

NOTICE is hereby given pursuant to section 208D of the Indian Companies Act, VII of 1913, that a general meeting of the abovenamed Company will be held on Tuesday, the 20th April 1937, at 11 a.m., at B4, Clive Buildings, Calcutta, when the liquidators will lay before the meeting an account of their acts and dealings and of the conduct of the winding up during the year to 13th March 1937 and a statement in the prescribed form containing the prescribed particulars with respect to the position of the liquidation.

W. J. YOUNIE, for self and co-liquidators.

Calcutta,

The 20th March 1937. (680—1)

In the matter of the Indian Companies Act, VII of 1913,

and

In the matter of Anchor Company, Limited (in voluntary liquidation).

NOTICE is hereby given pursuant to section 208D of the Indian Companies Act, VII of 1913, that a general meeting of the abovenamed Company will be held on Tuesday, the 20th April 1937, at 11-15 a.m., at B4, Clive Buildings, Calcutta, when the liquidators will lay before the meeting an account of their acts and dealings and of the conduct of the winding up during the year to 12th September 1936 and a statement in the prescribed form containing the prescribed particulars with respect to the position of the liquidation.

GEORGE R. CROOKS,
for self and co-liquidators.

Calcutta,
The 20th March 1937. (681—1)

INDIAN LAW REPORTS.

CALCUTTA SERIES of Indian Law Reports from 1876 onwards are available in the Publication Branch, Bengal Government Press, Alipore, Bengal. Enquiries for these may be made to Superintendent, Government Printing, at the above address. Monthly parts from 1930 onwards are available also at the Sales Department, Writers' Buildings, Calcutta—

PRICES.

From 1876 to 1934.

Complete yearly volume Rs. 12 { (postage Rs. 3 Inland). (" Rs. 4 Foreign).

From 1930 onwards.

Monthly parts only Rs. 2 { (postage As. 2 Inland). (" As. 3 Foreign).

Enquiries for series other than Calcutta must be made to the publishers concerned.

C. R. BATTERSBY,
Supdt., Govt. Printing, Bengal.

Alipore, the 6th December 1934.

SPECIAL ARRANGEMENTS.

Printing of the "Calcutta Gazette" of 15th April 1937.

OWING to Gazetted holiday on the 13th April 1937 on account of Chaitra Sankranti, the following special arrangements have been made for the printing of the "Calcutta Gazette" that will issue on the 15th April 1937 :—

All MSS. of notifications, declarations, etc., that are to appear in Part I of the "Calcutta Gazette" will be received in the Press up to 5 p.m. on Friday, the 9th April 1937, and all proofs must be returned to Press by 1 p.m. on Monday, the 12th April 1937.

Advertisements, notices, etc., intended for publication in Part II of the "Calcutta Gazette" will be accepted in the Press up to 5 p.m. on Friday, the 9th April 1937, and all proofs must be returned and cost deposited by 1 p.m. on Monday, the 12th April 1937.

Proofs of all other matter must be returned to Press not later than 1 p.m. on Monday, the 12th April 1937.

C. R. BATTERSBY, M.B.E.,
Supdt., Govt. Printing, Bengal.

Bengal Govt. Press, Alipore, the 30th March 1937.

GOVERNMENT OF BENGAL.

FINANCE DEPARTMENT.

Miscellaneous.

Calcutta, the 20th October 1927.

NOTICE.

IN supersession of the orders issued in notice, dated the 10th June 1922, published in the *Calcutta Gazette*, dated the 14th June 1922, the following revised rates have been fixed for the *Calcutta Gazette* and its parts with effect from the date of this notice. This will not, however, affect the subscriptions already paid at previous rates until they have expired :—

	Net.	With postage.	
Per annum—	Rs.	Rs.	A.
Entire	31	37	8
Part I	8	10	0
Part IA	2	3	0
Part IB	5	7	0
Part II	5	7	0
Parts III and IV together, or any one of them ..	1	1	8
Parts V and VI together, or any one of them ..	2	3	0
Bengal Library Catalogue ..	2	3	0
Jury Lists	3	4	0
Supplement	7	9	0

	Postage according to weight.	
Per issue—	Rs.	A.
Entire Gazette (excluding Bengal Library Catalogue and Jury Lists) ..	0	12
Part I	0	4
Part IA	0	2
Part IB	0	4
Part II	0	4
Parts III and IV together, or any one of them	0	2
Parts V and VI together, or any one of them	0	2
Bengal Library Catalogue ..	0	8
Jury Lists	1	0
Supplement	0	4

2. This will not affect the orders relating to specially heavy issues, issued in Notice No. 1874 Mis., dated the 22nd August 1923, published in the *Calcutta Gazette*, dated the 29th August 1923.

J. A. WOODHEAD,
Secretary to the Government of Bengal.

Imperial Library.

Secretariat Buildings, 6, Esplanade East, Calcutta. Open on—

Week days and Saturdays from 10 a.m. to 7 p.m.
Sundays and Gazetted holidays from 2 p.m. to 5 p.m.

THE Imperial Library is also a Lending Library. It is free to all except children. There is no subscription to pay.

K. M. ASADULLAH, Librarian.

CINCHONA FACTORY PRODUCTS.

By order of the Government of Bengal Cinchona Factory Products as manufactured and packed at the Cinchona Factory, Mungpoo, Darjeeling district, will be sold and distributed by the Superintendent of the Presidency Jail, *in original packages* as received from the Mungpoo Factory, at the rates herein noted from the 1st May 1926 :—

Name of drug.	Price per lb. in powder form. Taken at a time. For 60 lbs. and upwards.	For 6 lbs. and over but less than 60 lbs.	For any quantity less than 6 lbs.	Price in 5 grain tablets. 1,000 tablets.	500 tablets.	250 tablets.	Price by weight per lb.
	Rs.	Rs.	Rs.	Rs.	Rs. a.	Rs. a.	Rs.
Quinine Bisulphate ..	18	19	20	16	8 0	4 4	..
" Hydrobromide ..	23	24	25	20	10 0	5 4	..
" Bihydrobromide ..	26	27	28	23	11 8	6 0	..
" Salicylate ..	24	25	26	..	..	..	..
" Tannate ..30 per cent. 35 per cent.	14	15	16	..	..	..	14

N.B.—Packing free in tins, sizes 1 lb., 8 oz. and 4 oz. only. Packing in bottles or smaller sizes of tins extra.

Quinine Sulphate.

For 60 lbs. and upwards at a time .. Rs. 18 per lb.
For 6 lbs. and over but less than 60 lbs. at a time .. .. .. " 19 "
For any quantity less than 6 lbs. .. " 20 "

Crude Quinine Sulphate Powder .. Rs. 14 per lb.
Crude Quinine Sulphate Tablets .. " 12-8 "
Will be sold to Government departments, local authorities, hospitals, dispensaries and missionaries in the Bengal area of distribution.

Totaquina.

Irrespective of quantity .. Rs. 13-8 per lb.
For sale to hospitals and dispensaries in Bengal, Bihar, Orissa and Assam.

Quinine Hydrochloride.

For 60 lbs. and upwards at a time .. Rs. 23 per lb.
For 6 lbs. and over but less than 60 lbs. at a time .. .. .. " 24 "
For any quantity less than 6 lbs. .. " 25 "

Quinine Di-Hydrochloride.

For 60 lbs. and upwards at a time .. Rs. 25 per lb.
For 6 lbs. and over but less than 60 lbs. at a time .. .. .. " 26 "
For any quantity less than 6 lbs. .. " 27 "

Quinidine Sulphate.

For 60 lbs. and upwards at a time .. Rs. 20 per lb.
For 6 lbs. and over but less than 60 lbs. at a time .. .. .. " 21 "
For any quantity less than 6 lbs. .. " 22 "

Cinchonidine Sulphate.

For 60 lbs. and upwards at a time .. Rs. 25 per lb.
For 6 lbs. and over but less than 60 lbs. at a time .. .. .. " 26 "
For any quantity less than 6 lbs. .. " 27 "

Cinchonine Sulphate.

For 60 lbs. and upwards at a time .. Rs. 12 per lb.
For 6 lbs. and over but less than 60 lbs. at a time .. .. .. " 13 "
For any quantity less than 6 lbs. .. " 14 "

*Cinchona Febrifuge (Powder).

For 60 lbs. and upwards at a time .. Rs. 9 per lb.
For 6 lbs. and over but less than 60 lbs. at a time .. .. .. " 9 "
For any quantity less than 6 lbs. .. " 10 "

*Cinchona Febrifuge (Tablets).

For 60 lbs. and upwards at a time .. Rs. 10 per lb.
For 6 lbs. and over but less than 60 lbs. at a time .. .. .. " 10 "
For any quantity less than 6 lbs. .. " 11 "

Supply of Cinchona Febrifuge to all authorised indentors will be rationed in the proportion of 1½ of Cinchona Febrifuge to 1 of Quinine Sulphate at their existing prescribed prices.

Cinchona Bark (in 50 pound original bags).

Per bag .. .. .. Rs. 25.

4 grains Quinine Tablets.

Rs.	a.	
2	8	per box of 200 tablets (for Bengal and other provinces).
15	8	per lb.

5 grains Quinine Tablets.

Rs.	a.	
15	8	per lb. sold in 1 lb., ½ lb. and ¼ lb. tins.

5 grains Quinine Hydrochloride Tablets.

Rs.	a.	
20	0	per 1,000 tablets.
10	0	" 500 "
5	4	" 250 "

Packing free in tins, sizes 1 lb., 8 oz. and 4 oz. only. Packing in bottles or smaller sizes in tins extra.

5 grains Quinine Bihydrochloride Tablets.

Rs.	a.	
22	0	per 1,000 tablets.
11	0	" 500 "
6	0	" 250 "

Packing free in tins, sizes 1 lb., 8 oz. and 4 oz. only. Packing in bottles or smaller sizes in tins extra.

Transit charges extra in every case.

Quinine and Cinchona products will be sold by the Presidency Jail to (*a*) Local Governments and departments of Local Governments, (*b*) dispensaries and hospitals belonging to or managed by Local Governments and local authorities, (*c*) Municipalities, District Boards, Railways, Union Boards and other local authorities otherwise than for purposes of sale to the public, (*d*) Missions, (*e*) Government Medical Store Depot, Calcutta.

Provinces other than Bengal, Bihar, Orissa and Assam will get their supplies of Sulph. Quinine and Cinchona Febrifuge Powder and Tablets from the Director, Botanical Survey of India, Sibpur, Howrah.

Local sale at the jail gate from 10 a.m. to 3-30 p.m.

The system of payment is by—*Cash in advance*—by "*Treasury Challans*," "*Remittance Transfer Receipts*" or crossed "*Cheques*."

Indents unaccompanied by cash in advance will be sent Value Payable Post. Credit sale is not allowed except under special circumstances.

In the case of *Government officers* payments will be recovered by *Book Transfer, i.e., Countersigned Invoices*, in the event of *Cash* not accompanying the indent by "*Treasury Challans*," *Remittance Transfer Receipt or Cheque*.

2. Price and postage must accompany the price of the drug (when the drug is required by post).

The name of the Railway and Steamer Station or Post Office must be written distinctly when the parcels are required by Rail, Steamer or by Post. Railway parcels are sent by passenger train only.

A scale of postage is given below.

	1 oz.	2 ozs.	4 ozs.	¼ lb.	½ lb.	1 lb.
	As.	As.	As.	As.	As.	Rs. A.
Quinine Sulph. ..	..	..	7	7	11	0 11
Cinchona Feb. ..	..	..	7	7	11	0 11
Cinchona Feb. Tablets	..	..	7	7	11	0 11
Quinine Hydrochlor. ..	5	5	7	7	..	0 11
Quinine Di-hydrochlor.	5	5	7	7	..	0 11
Quinine Tablets ..	..	..	7	7	11	0 11
Totaquina ..	..	..	7	7	11	0 11

	1½ lb.	2 lb.	3 lb.	4 lb.	5 lb.	6 lb.
	Rs. A.	Rs. A.	Rs. A.	Rs. A.	Rs. A.	Rs. A.
Quinine Sulph. ..	0 15	1 3	1 7	1 15	2 7	2 11
Cinchona Feb. ..	0 15	0 15	1 7	1 11	2 3	2 7
Cinchona Feb. Tablets	0 15	1 3	1 11	1 15	2 7	2 15
Quinine Hydrochlor. ..	0 15	1 3	1 7	1 15	2 7	2 11
Quinine Di-hydrochlor.	0 15	0 15	1 7	1 11	2 3	2 7
Quinine Tablets ..	0 15	0 15	1 7	1 11	1 15	2 3
Totaquina ..	0 15	1 3	1 7	1 15	2 7	2 11

Two different drugs are not packed in the same parcel and postage must be paid separately for each kind.

N.B.—Postage stamps are not accepted as revenue.

Government reserve the right to alter the price without notice.

Government Publications for Sale

At the Bengal Government Press (Publication Branch)

Sales Office, Writers' Buildings, Calcutta.

Customers in the United Kingdom and the Continent of Europe may obtain the publications either direct from the High Commissioner's Office or through any book-seller.

NOTICE—Books required for private use can be purchased. Applications should be accompanied by remittance in each case.

All remittances on account of subscriptions to or enquiries regarding prices of Gazettes, Indian Law Reports or other Government publications available for sale should be addressed to the Superintendent, Government Printing, Bengal Government Press, Alipore. Advices of remittances should be sent to the same address.

Remittances on account of advertisements in official publications should be addressed to Accountant, Bengal Secretariat.

All remittances must include postal and packing charges which are shown in parentheses against each item in the list below.

All advertisements intended for publication in the *Calcutta Gazette* should be sent direct to the Superintendent, Government Printing, Bengal Government Press, Alipore, 24-Parganas.

Books required for the public service should be obtained through the Heads of Departments.

New Publications issued during the Current Quarter.

Legislative Council Proceedings.

Proceedings of the Bengal Legislative Council for the meetings held on the 9th to 11th, 25th to 27th and 30th November and 1st to 4th December 1936. Vol. XLIX. Re. 1-9 (9a.).

Acts.

Bengal Village Self-Government Act (Bengal Act V of 1919) as modified up to 1st August 1935 in Bengali. As. 4 (2a.).

Bengal Water Hyacinth Act (Bengal Act XIII of 1936) in Bengali. As. 2 (1a.).

Bengal Local Self-Government (Amendment) (Bengal Act XIV of 1936). As. 2 (1a.).

Bengal Local Self-Government Second Amendment Act (Bengal Act XV of 1936). A. 1 (1a.).

Bengal Local Self-Government Association (Recognition) Act (Bengal Act XVI of 1936). A. 1 (1a.).

Bengal Patni Taluk Regulation Amendment Act (Bengal Act XVII of 1936). As. 1 (1a.)

Bengal Births and Deaths Registration Act (Bengal Act IV of 1873) as modified up to 1st March 1932. A. 1 (1a.).

Calcutta Municipal Act (Bengal Act III of 1923) as modified up to 15th May 1936. Re. 1-3 (7a.).

Miscellaneous Publications.

Anderson. Anderson Weir. Rs. 2-12 (3a.).

Certificate. Bengal—Manual, 1936. As. 6 (5a.).

Civil List. Half-yearly—for Bengal corrected up to 1st January 1937. Rs. 3-8 (13a.).

Classified List and Distribution Return of Establishment of the Irrigation Department corrected up to 1st July 1936. Re. 1-3 (2a.).

District Boards. Resolution reviewing the Reports on the working of —in Bengal, 1934-35. As. 4 (3a.).

Damodar Canal. Schedule of rates for maintenance works in connection with the—Project, 1937. As. 10 (2a.).

Dispensaries. Annual Report on the Working of Hospitals and—in Bengal, 1935. Rs. 2 (6a.).

Forest. Annual Progress Report on —Administration in the Presidency of Bengal for the year 1935-36. Re. 1-1 (4a.).

Health. Bengal Public—Report, 1935. Re. 1 (6a.).

Industries. Annual Report of the Board of—, Bengal, 1935-36. A. 1 (1a.).

Annual Administration Report of the Department of—, Bengal, 1935-36. Re. 1-8 (4a.).

Land Revenue. Administration Report of Bengal, 1935-36. As. 15 (3a.).

List of Members of the Bengal Legislative Assembly dated the 5th February 1937. As. 4 (2a.).

Municipalities. Resolution reviewing the reports on the working of—in Bengal, 1934-35. As. 6 (4a.).

Survey Instruments. Notes on standard for checking —in Bengal, 1937. As. 10 (1a.).

Schools. List of—in the Burdwan Division corrected up to 31st March 1936. As. 6 (3a.).

Tables. Chronological—for 1937. A. 1 (1a.).

Theodolite Traverse. Rules for the guidance of Commissioners in carrying out a—and the subsequent detail survey with plane table, chain, etc., 1936. As. 3 (1a.).

Trade-Unions. Report on the Working of the Indian —Act in Bengal, 1936. As. 8 (1a.).

Wages. The Bengal Payment of—Rules, 1937. A. 1 (1 a.).

Publications issued between 1st July and 31st December 1936.

Legislative Council Proceedings.

For the meetings held on the 13th, 14th, 16th to 20th, 23rd to 27th and 30th March 1936. Vol. XLVIII, No. 2. Rs. 2-3 (11a.).

Acts.

Bengal Police Act (Bengal Act VII of 1869), as modified up to 1st May 1936. A. 1 (9p.).

Bengal Muhammadan Marriages and Divorces Registration Act (Bengal Act I of 1876), as modified up to 20th May 1935. In Urdu. As. 12 (1a.). In Bengali. As. 9 (1a.).

Bengal Municipal Act (Bengal Act XV of 1932), as modified up to 1st May 1936. As. 9 (5a.).

Bengal Water Hyacinth Act (Bengal Act XIII of 1936). A. 1 (1a.).

Calcutta Improvement Act (Bengal Act V of 1911), as modified up to 1st January 1936. As. 10 (3a.).

Court-fees Act (Reprint of I. C. Act VII of 1870), as modified up to 15th April 1936. As. 2 (2a.).

Court of Wards Act (Bengal Act IX of 1879), as modified up to 1st April 1936. As. 2 (2a.).

Howrah Bridge Act (Bengal Act IV of 1926), as modified up to 1st May 1936. As. 2 (1a.).

Miscellaneous Publications.

Accounts. Co-operative Stores—Manual, 1936. As. 4 (2a.).

Administration. Annual—Reports for Establishment, Building, Railways and Communications, 1934-35. As. 6 (1a.).

Agriculture. Annual Report of the Department of—, Bengal, 1935-36. Part I. As. 11 (2a.). Part II. Re. 1-4 (6a.).

Annual Report of the Department of—, Bengal, 1934-35. Part I. As. 4 (2a.).

Agricultural Debtors. Abstract of the sections of Bengal —Act and of the Rules which concern ordinary Debt Settlement Boards, 1936, in Bengali. A. 1(1a.).

Bengal—Rules, 1936, in Bengali. As. 4 (3a.).

Apprenticeship Training Examination Papers, June 1936. A. 1 (1a.).

Audit. Annual Report on the Working of the Local—Department, 1934-35. As. 8 (2a.).

Botanic. Annual Report of Royal—Gardens and the Gardens in Calcutta and Darjeeling, 1935-36. A. 1 (1a.).

Bulletin No. 47. Neem Oil and its Treatment in Soap-making. A. 1 (1a.).

No. 70. Utilisation of Waste-Glass in the manufacture of Sodium Silicate, 1936. A. 1 (1a.).

No. 31. Manufacture of Washing Soap as a Cottage Industry. Third Edition, 1936. A. 1 (1a.).

No. 71. Possibilities of the Coir Industry in Bengal. As. 7 (1a.).

No. 72. Saponification by means of Sodium Carbonate. A. 1 (1a.).

No. 73. Capital Outlay and Working Costs for the Manufacture of Coir Articles. As. 2 (1a.).

Censors. Manual of the Bengal Board of—, 1936. As. 8 (2a.).

Chemical. Annual Report of the—Examiner's Department, Bengal, 1935. As. 8 (1a.).

Cinchona. Annual Report of the Government—Plantations and Factory in Bengal, 1935-36. As. 6 (1a.).

Cinematograph. Annual Report on the Working of—Act in Bengal, 1936. Re. 1-4 (1a.).

Civil List. Half-yearly—for Bengal corrected up to 1st July 1936. Rs. 3 (13a.).

Classified List and Distribution Return of Establishment of Roads and Buildings corrected up to 1st July 1936. As. 10 (2a.).

Crop. Season and—Report of Bengal, 1935-36. As. 4 (2a.).

Debtors. Bengal Agricultural—Rules, 1936. As. 8 (3a.).

Dispensaries. Triennial Report on the Working of Hospitals and—under the Government of Bengal, 1932-34. Rs. 2 (6a.).

List of Hospitals—and other Medical Institutions in Bengal, corrected up to 31st December 1935. Rs. 2-2 (4a.).

District Boards. Resolution reviewing the Reports on the Working of—in Bengal, 1933-34. As. 3 (3a.).

Election(s). Rules under the Local Self-Government Act, corrected up to June 1936. A. 1 (1a.).

Bengal Electoral Conduct of—Rules, 1936. As. 4 (4a.).

Form of Return of—Expenses, 1936. As. 4. (1a.).

Electrical Works. General conditions of contract for—in the Public Works Department, Bengal, with form of tender in duplicate, 1936. As. 3 (2a.).

Electricity. Annual Report on the Administration of —Act in Bengal, 1935. As. 8 (2a.).

Examination. Bengal Secretariat Clerkship—Question papers, 1936. As. 8 (1a.).

Bengal Civil Service—Question papers, 1936. Re. 1. (3a.).

Health. Annual Report of the Chief Engineer, Public—Department, 1935. As. 8 (1a.).

Bengal Public—Report, 1934. Re. 1 (6a.).

Reports of the—Departments of the Ports of Calcutta and Chittagong, 1935. As. 4 (1a.).

Holidays. List of Public—, 1937. A. 1 (1a.).

Hooghly College. History of the—, 1836-1936. As. 11 (5a.).

Register, 1836-1936. Re. 1-1 (7a.).

Jails. Annual Report on the Administration of—of Bengal Presidency, 1935. As. 12 (3a.).

Justice. Report on the Administration of Civil—of Assam, 1935. As. 7 (2a.).

Report on the Administration of Criminal—of Assam, 1935. As. 5 (2a.).

Report on the Administration of Criminal—in Bengal, 1935. As. 3 (2a.).

Report on the Administration of Civil—in Bengal, 1935. As. 14 (3a.).

Legislation. Effect of—List for 1935. A. 1 (1a.).

Loans. Bengal—Manual, 1918. Published 1936. As. 8 (3a.).

Medical. Annual Report of the—Schools in Bengal, 1934-35. Re. 1 (4a.).

Model Rules. Rules,—and Model By-laws framed under the Bengal Municipal Act, 1932. Published 1936. As. 12 (6a.).

Nursery and Plantation Notes for Bengal, 1933. Re. 1 (5a.).

Plantations. Notes on Thinning in—, 1936. As. 5 (2a.).

Police. Bengal—Training College Manual, 1936. As. 9 (3a.).

Annual Report on the—Administration of the Town of Calcutta and Suburbs, 1935. As. 9 (3a.).

Report on the—Administration in the Bengal Presidency, 1935. As. 10 (3a.).

Public Instruction. Report on—in Bengal, 1934-35. As. 6 (3a.).

Registration. Statistical Returns with a Brief Note of the—Department in Bengal, 1935. As. 3 (2a.).

Schedule of Rates of the South-Western Circle, corrected up to 1st April 1935. As. 12 (3a.).

Schools. List of—in the Rajshahi Division corrected up to June 1935. As. 8 (2a.).

Smoke Nuisances. Thirtieth Annual Report of Bengal —Commission, 1935. A. 1 (1a.).

Stamp. Statistical Returns regarding Administration of—Department in Bengal, 1935-36. As. 3 (1a.).

Statistics. Agricultural—of Bengal, 1934-35. As. 6 (2a.).

Survey. Annual Report on the—and Settlement Operations in Bengal, 1934-35. Rs. 3 (5a.).

Veterinary. Annual Reports of the Civil—Department, Bengal, and of Bengal—College, 1934-35. As. 4 (2a.).

Water Hyacinth. Bengal—Act and Rules thereunder. A. 1 (1a.).

Workmen's. Annual Report on the Working of—Compensation Act in Bengal, 1935. As. 3 (1a.).

Registered No. C207

The Calcutta Gazette

THURSDAY, APRIL 1, 1937.

PART VI

Bills introduced in the Council of State and Legislative Assembly, Reports of Select Committees presented to the Council and Assembly, and Bills published under Rule 18 of the Indian Legislative Rules.

GOVERNMENT OF INDIA.

Legislative Assembly Department.

The following Bill was introduced in the Legislative Assembly on the 19th February, 1937:—

L. A. BILL No. 11 OF 1937.

A Bill further to amend the Indian Limitation Act, 1908, for a certain purpose.

WHEREAS it is expedient further to amend the Indian Limitation Act, 1908, for the purpose hereinafter appearing; It is hereby enacted as follows:— IX of 1908.

Short title.

1. This Act may be called the Indian Limitation (Amendment) Act, 1937.

Amendment of Article 149, First Schedule to Act IX of 1908.

2. In Article 149 in the First Division of the First Schedule to the Indian Limitation Act, 1908, to the entry in the first column the following words shall be added, namely:— IX of 1908.

"except a suit before the Federal Court in the exercise of its original jurisdiction".

STATEMENT OF OBJECTS AND REASONS.

Article 149 of the Indian Limitation Act, 1908 (IX of 1908), prescribes a special period of limitation of 60 years for any suit by or on behalf of the Secretary of State for India in Council. This Article will in future govern suits by a Province against a Province or between a Province and the Federation. The reasons which justify a specially long period of limitation for suits by the Crown against a private person hardly seem applicable where both parties represent the Crown. It is, therefore, necessary to amend the Article by excluding from its scope suits brought before the Federal Court in the exercise of its original jurisdiction.

H. D. CRAIK.

NEW DELHI;

The 16th February, 1937.

MD. RAFI,

Secy. to the Govt. of India.

GOVERNMENT OF INDIA.

Legislative Assembly Department.

The following Bill* was introduced in the Legislative Assembly on the 19th February, 1937:—

L. A. BILL No. 13 OF 1937.

A Bill further to amend the Indian Army Act, 1911, for a certain purpose.

WHEREAS it is expedient further to amend the Indian Army Act, 1911, for the purpose hereinafter appearing; It is hereby enacted as follows:— VIII of 1911.

Short title.

1. This Act may be called the Indian Army (Amendment) Act, 1937.

Amendment of section 2, Act VIII of 1911.

2. In section 2 of the Indian Army Act, 1911,— VIII of 1911.

(*a*) to clause (*a*) of sub-section (*1*) the following proviso shall be added, namely:—

"Provided that a person holding a commission in the Army in India Reserve of Officers shall be so subject only when ordered on any duty or service for which he is liable as a member of such reserve force.": and

(*b*) to sub-section (*2*) the following proviso shall be added, namely:—

"Provided that an officer of the Indian Land Forces retired therefrom and appointed to the Indian Regular Reserve of Officers shall again become so subject when ordered on any duty or service for which he is liable as a member of such reserve force."

*The Governor General has been pleased to accord the sanction required by section 67 (*2*) of the Government of India Act.

STATEMENT OF OBJECTS AND REASONS.

Under section 175 (*9*) of the Army Act, officers of the British wing of the Army in India Reserve of Officers are only subject to military law when called out in a military capacity. There is no corresponding provision in the Indian Army Act for officers in the Indian wing of the Army in India Reserve of Officers. It is proposed, therefore, to amend the Indian Army Act, 1911 (VIII of 1911), to put officers of the Indian wing in exactly the same position as officers in the British wing.

2. When Indian Commissioned Officers retire, they are liable under certain conditions to join the new Indian Regular Reserve. There is however no provision in the Indian Army Act for the subjection to military law of a retired officer who is in this Reserve. This defect is being remedied, but at the same time steps are being taken to ensure that such officers will only be subject to military law when ordered on any duty or service for which they are liable as members of the Reserve.

G. R. F. TOTTENHAM.*

NEW DELHI;

The 12th February, 1937.

MD. RAFI,

Secy. to the Govt. of India.

Registered No. C207

No. 13 of 1937

The Calcutta Gazette

THURSDAY, APRIL 1, 1937.

CONTENTS:

	Page.
Resolution on the Report on the administration of the Wards, Attached and Trust Estates in the Presidency of Bengal for the year 1342 B.S. (1935-36)	349—350
Forecast of the *Rabi* Crops of Bengal for 1936-37	351—362
Corporation of Calcutta Notices ..	363—364
Weather and Crop Report for the week ending 24th March 1937	365—368
Prices-current (wholesale and retail) of Food-grains, Salt, etc., in the districts of Bengal for the first half of March 1937	369—372
Errata to Daily Rainfall recorded in Bengal for the month of December 1936 ..	373
Statement under the Cotton Ginning and Pressing Factories Act, 1925 ..	373
Statements of weekly gauge readings on certain rivers in Bengal	374—375

SUPPLEMENT.

Official Papers.

Report on the administration of the Wards, Attached and Trust Estates in the Presidency of Bengal for the year 1342 B.S. (1935-36).

GOVERNMENT OF BENGAL.

Revenue Department.

Land Revenue.

RESOLUTION—No. 7142L.R.

Calcutta, the 22nd March 1937.

Read—

The report of the Board of Revenue, Bengal, on the administration of the Wards, Attached and Trust Estates in the Presidency of Bengal for the year 1342 B.S. (1935-36).

1. At the beginning of the year under report the total number of estates under the management of the Court of Wards was 125. Seven new estates were brought under management of the Court and 3 estates were released during the year. Thus at the close of the year there were 129 estates in charge of the Court.

2. Out of the aggregate of Rs. 89,75,727 due to Government as revenue and cesses, a sum of Rs. 73,05,186 or 81·3 per cent. of the total was paid during the year, as against 80·2 per cent. in the previous year. The defaults accrued in heavily encumbered estates where the collections were insufficient to meet the pressing liabilities.

3 The total current demand due to the estates on account of rent and cesses was Rs 183·92 lakhs and arrear demand Rs 305·43 lakhs The total sum collected was Rs. 171·68 lakhs representing 35·0 per cent. of the total demand or 93·3 per cent of the current demand against 34·8 per cent. and 95 4, respectively, in the preceding year. The fall in the percentage of collection in certain estates in Chittagong is attributed to the continuance of comparatively low prices in that district.

Though the collection in Kasimbazar Estate is still below the standard, there has been an improvement in the last two years with a resulting improvement in the general position of that estate.

4. The total amount of ascertained debts of the Court of Wards Estates in the Presidency at the close of the year under report stood at Rs. 2,89,41,124 against Rs. 3,39,69,781 in the preceding year. The principal repaid or otherwise reduced was Rs. 44,20,325 and the interest paid or otherwise reduced Rs. 17,18,584 as compared with Rs. 22,25,315 and Rs. 16,40,257, respectively, in the previous year

5. The percentage of cost of management of the estates in the whole Presidency on their current rent and cess demand was 11·8 as against 9·7 of the preceding year. Law expenses rose from Rs. 10·60 lakhs in 1934-35 to Rs 11·69 lakhs.

6. The total sum spent during the year under the heads Schools, dispensaries and works of improvement amounted to Rs. 5,52,269 against Rs. 5,83,122 in the preceding year.

7. The thanks of the Governor in Council are due to the Board of Revenue for the efficient administration of the estates under the management of the Court of Wards. He also notices with pleasure the work done by the Managers mentioned in the report.

Order.—Ordered that the resolution be published in the *Calcutta Gazette.*

By order of the Governor in Council,

J. B. KINDERSLEY,

Secy. to the Govt. of Bengal (offg.).

DEPARTMENT OF AGRICULTURE, BENGAL.

Dacca, the 23rd March 1937.

Forecast of the Rabi Crops of Bengal for 1936-37.

(*Note.*—On an average of the five years ending 1934-35, the area under summer rice in Bengal has represented some 0·4 per cent. of the total area under rice in British India.)

Character of the season.—Good rainfall in October facilitated the preparatory tillage for and sowing of the crops which commenced generally in the normal time. Subsequent dry weather since November proved helpful to the germination and growth of the crops. In the middle part of February heavy rainfall caused some damage to the crops especially in some districts of West and North Bengal. On the whole, the season has been a fairly favourable one for the crops this year.

Acreage.—The normal area under the different *rabi* crops dealt with in this forecast is estimated at 3,518,000 acres. The area actually sown this year is reported to be 3,221,800 acres as against 3,036,400 acres last year. Of this, the area under summer rice is reported at 432,300 acres as against 403,700 acres last year and that under tobacco is 307,300 acres as against 307,100 acres last year.

Outturn.—According to District Officers' estimates, the average outturn of the different *rabi* crops for the province, as a whole, works out at 84 per cent. of the normal as against 76 per cent. last year, the outturn for the more important *rabi* districts being as follows:—

Mymensingh 100, Dacca 80, Rangpur 90, Murshidabad 76, Faridpur 82, Pabna 79, Noakhali 75, Rajshahi 78, Bakarganj 100, Tippera 70, Nadia 66, Jalpaiguri 84, Malda 80, Bogra 75, Jessore 58 and Khulna 80.

Summer rice and tobacco crops.—The outturn of summer (*boro*) rice, according to District Officers' estimates, is 92 per cent. of the normal as against 85 per cent. last year. The gross yield of the crop for the province on a basis of the normal yield of 15 maunds of clean rice per acre is estimated at 219,200 tons this year as against 189,100 tons last year.

The outturn of tobacco crop is estimated at 88 per cent. of the normal as against 79 per cent. last year. Taking 14½ maunds as the normal yield of the crop per acre, the gross yield of the crop for the province this year is estimated at 144,000 tons as against 129,200 tons last year.

M. CARBERY,

Director of Agriculture, Bengal.

APPENDIX I.

Forecast of the Rabi Crops of Bengal for 1936-37.

District.	Name of crop.	Estimated normal area under each crop.	Estimated area under each crop.		Estimated outturn as a percentage of the normal yield per unit of area.		Dates by which the sowing of the crops generally commenced this year, and whether those dates were early, normal or late.	Dates by which the harvesting of the crops generally commenced this year, and whether those dates were early, normal or late.	Remarks by District Officers.
			Last year.	This year.	Last year.	This year.			
		Acres.	Acres.	Acres.					
24-Parganas.	*Boro* or summer rice ..	700	..	..	..	..	October and November. Normal.	February and March.	The weather has been fairly favourable
	Gram	600	400	500	67	83			
	Other *rabi* cereals (excluding wheat).	2,600	1,200	1,300	67				
	Other *rabi* pulses ..	17,500	7,900	7,400	67				
	Rabi fruits and vegetables (including root-crops).	8,200	14,600	15,000	75				
	Other *rabi* food-crops (excluding wheat).	1,300	1,500	1,600	75				
	Total food-crops ..	30,900	25,600	25,800	72	83			
	Tobacco	1,000	700	700	50	75			
	Rabi fodder-crops (excluding any crops shown above).	..	100	100	42				
	Sunn hemp	..	100	100	67				
	Condiments and spices ..	3,300	2,800	2,800	58	67			
	Other *rabi* non-food-crops (excluding the crops shown above).	300	200	200	50				
	Total non-food-crops ..	4,600	3,400	3,900	56	69			
	GRAND TOTAL ..	35,500	29,000	29,700	70	83			
Nadia.	Barley	5,500	3,800	4,800	33	58	Middle of October. Normal.	Middle of February. Normal.	The increase is due to good rainfall in time of sowing. Insufficient rain later on retarded the growth and recent rain will spoil some of the crops. Hence the outturn is anticipated to fall below the normal.
	Boro or summer rice ..	700	400	500	42	58			
	Gram	76,800	35,600	60,400	33	67			
	Other *rabi* cereals (excluding wheat).	83,300	9,500	11,100		58			
	Other *rabi* pulses ..	500	15,200	27,200		67			
	Rabi fruits and vegetables (including root-crops).	13,200	3,200	3,400		67			
	Other *rabi* food-crops (excluding wheat).	12,200	200	300		67			
	Total food-crops ..	192,200	67,900	107,700	33	67			
	Tobacco	2,000	2,900	3,400	50	67			
	Other drugs and narcotics	200	..	..	..	..			
	Rabi fodder-crops (excluding any crops shown above).	1,100	6,800	8,200	33	58			
	Condiments and spices ..	500	3,200	4,500		58			
	Other *rabi* non-food-crops (excluding the crops shown above).	5,600	700	800		50			
	Total non-food-crops ..	9,400	13,600	16,900	37	58			
	GRAND TOTAL ..	201,600	81,500	124,600	34	66			
Murshidabad.	Barley	12,700	17,700	20,800	75	83	Middle of October to end of November. Normal.	..	The increase in area is due to favourable weather condition at the sowing time. Some damage has been caused to most of the crops both by drought towards the beginning and by heavy rain towards the latter part of the season. Hence the outturn is expected to fall below the normal
	Boro or summer rice ..	2,800	1,600	2,200	67	83			
	Gram	153,800	79,000	105,500	67	75			
	Other *rabi* cereals (excluding wheat).	15,000	6,900	5,000	58				
	Other *rabi* pulses ..	128,400	69,000	105,300	67				
	Rabi fruits and vegetables (including root-crops).	20,700	19,000	15,000	75				
	Other *rabi* food-crops (excluding wheat).	500	200	300	58				
	Total food-crops ..	333,900	193,400	254,100	67	76			
	Tobacco	1,400	900	1,200	75	83			
	Other drugs and narcotics	300	(25)	(25)	92	83			
	Rabi fodder-crops (excluding any crops shown above).	12,000	7,500	9,100	67	83			
	Sunn hemp	200	100	(200)	92	92			
	Other *rabi* fibres (excluding sunn hemp).	(2)	.	..	..	..			
	Condiments and spices ..	8,500	6,000	6,600	83	75			
	Other *rabi* non-food crops (excluding the crops shown above).	3,300	4,900	2,000	75	92			
	Total non-food-crops ..	25,700	20,000	19,100	75	81			
	GRAND TOTAL ..	359,600	213,400	273,200	68	76			

District.	Name of crop.	Estimated normal area under each crop.	Estimated area under each crop.		Estimated outturn as a percentage of the normal yield per unit of area.		Dates by which the sowing of the crops generally commenced this year, and whether those dates were early, normal or late.	Dates by which the harvesting of the crops generally commenced this year, and whether those dates were early, normal or late.	Remarks by District Officers.
			Last year.	This year.	Last year.	This year.			
		Acres.	Acres.	Acres.					
Jessore.	Barley	700	500	600	40	66	November. Normal.	March. Normal.	The outturn is anticipated to fall below the normal owing to some damage caused by unusual rain.
	Boro or summer rice ..	800	1,000	1,000	50	60			
	Gram	5,400	2,700	3,100	40	59			
	Other *rabi* cereals (excluding wheat).	34,300	29,300	30,000	38	56			
	Other *rabi* pulses ..	6,800	5,500	6,200	40	55			
	Rabi fruits and vegetables (including root-crops).	3,300	3,200	3,300	33	60			
	Other *rabi* food-crops (excluding wheat).	5,700	3,200	4,500	38	60			
	Total food-crops ..	57,000	45,400	48,700	38	59			
	Tobacco	3,800	3,400	2,900	50	60			
	Other *rabi* non-food-crops (excluding the crops shown above).	1,300	1,300	800	50	55			
	Total non-food-crops ..	5,100	4,700	3,700	50	57			
	GRAND TOTAL ..	62,100	50,100	52,400	39	58			
Khulna.	*Boro* or summer rice ..	25,300	12,600	21,900	83	88	January. Normal.	Not yet commenced.	The increase in area is due to propaganda of jute cultivation. The outturn is anticipated to fall below the normal owing to some damage caused by insect-pests.
	Gram	100	..	..	..	..			
	Other *rabi* cereals (excluding wheat).	200	100	100	50	100	October to November. Normal.	End of February. Early.	
	Other *rabi* pulses ..	10,100	9,600	10,400	50	83			
	Rabi fruits and vegetables (including root-crops).	8,200	7,600	8,500	67	75			
	Other *rabi* food-crops (excluding wheat).	500	900	800	50	67			
	Total food-crops ..	44,400	30,800	41,700	55	83			
	Tobacco	4,800	2,000	2,100	50	67	November. Normal.	Not yet commenced.	
	Condiments and spices ..	8,500	7,200	8,000					
	Other *rabi* non-food-crops (excluding the crops shown above).	2,100	200	200					
	Total non-food-crops ..	15,400	9,400	10,300	50	70			
	GRAND TOTAL ..	59,800	40,200	52,000	54	80			
Burdwan.	Barley	2,500	1,000	1,300	58	92	3rd week of November.	Beginning of February.	The increase in area is due to favourable weather condition.
	Boro or summer rice ..	300	200	800	50	92			
	Gram	2,600	1,900	2,400	50	92			
	Other *rabi* cereals (excluding wheat).	800	500	500	42	100			
	Other *rabi* pulses ..	19,000	7,000	12,300	42	92			
	Rabi fruits and vegetables (including root-crops).	17,800	7,000	8,900					
	Other *rabi* food-crops (excluding wheat).	1,800	400	1,100	42	92			
	Total food-crops ..	44,800	18,000	26,700	42	92			
	Tobacco	200	300	300	75	92			
	Rabi fodder-crops (excluding any crops shown above).	200	200	200	50	100			
	Sunn hemp	100	100	100					
	Condiments and spices ..	200	300	200					
	Other *rabi* non-food-crops (excluding the crops shown above).	400	300	400					
	Total non-food-crops ..	1,100	1,200	1,200	56	98			
	GRAND TOTAL ..	45,900	19,200	27,900	43	92			

District.	Name of crop.	Estimated normal area under each crop.	Estimated area under each crop.		Estimated outturn as a percentage of the normal yield per unit of area.		Dates by which the sowing of the crops generally commenced this year, and whether those dates were early, normal or late.	Dates by which the harvesting of the crops generally commenced this year, and whether those dates were early, normal or late.	Remarks by District Officers.
			Last year.	This year.	Last year.	This year.			
		Acres.	Acres.	Acres.					
Birbhum.	Barley	100	200	200	75	100	End of October. Normal.	Beginning of March. Normal.	The increase in area is due to sufficient rain at the sowing time. The weather has been favourable.
	Gram	5,000	5,800	7,000					
	Other *rabi* cereals (excluding wheat).	1,200	1,100	1,500					
	Other *rabi* pulses .	1,200	2,100	3,000					
	Rabi fruits and vegetables (including root-crops).	7,000	8,100	8,400					
	Other *rabi* food-crops (excluding wheat).	800	500	700					
	Total food-crops ..	15,300	17,800	20,800	75	100			
	Other *rabi* non-food-crops (excluding the crops shown above).	500	400	500	83	100			
	Total non-food-crops ..	500	400	500	83	100			
	GRAND TOTAL ..	15,800	18,200	21,300	75	100			
Bankura.	Barley	2,000	2,700	2,300	58	108	November. Normal.	Not yet commenced.	The outturn is greater than the normal owing to favourable weather.
	Boro or summer rice ..	500	200	200					
	Gram	1,900	1,300	1,500					
	Other *rabi* cereals (excluding wheat).	500	2,400	3,300					
	Other *rabi* pulses ..	6,000	4,600	5,400					
	Rabi fruits and vegetables (including root-crops).	4,300	7,600	7,900					
	Other *rabi* food-crops (excluding wheat).	1,200	1,800	2,000					
	Total food-crops ..	16,400	20,000	22,600	58	108			
	Tobacco	600	300	300	58	92			
	Other drugs and narcotics	(50)	(50)	100					
	Rabi fodder-crops (excluding any crops shown above).	(50)	(5)	200					
	Sunn hemp	400	100	200					
	Condiments and spices ..	1,500	600	800					
	Other *rabi* non-food-crops (excluding the crops shown above).	1,200	2,200	2,200					
	Total non-food-crops ..	3,700	3,200	3,800	58	92			
	GRAND TOTAL ..	20,100	23,200	26,400	58	106			
Midnapore.	Barley	500	100	100	67	83	Between November and December. Normal.	Between March and April. Normal.	The decrease in area is due to want of rainfall. Drought is responsible for the low outturn.
	Boro or summer rice ..	17,400	4,500	3,900					
	Gram	800	3,000	2,900					
	Other *rabi* cereals (excluding wheat).	10,000	5,200	4,000					
	Other *rabi* pulses ..	24,300	4,400	4,500					
	Rabi fruits and vegetables (including root-crops).	17,000	5,600	5,800					
	Other *rabi* food-crops (excluding wheat).	14,700	7,400	6,500					
	Total food-crops ..	84,700	30,200	27,700	67	83			
	Tobacco	700	2,800	2,800	67	83			
	Other drugs and narcotics	..	100	100					
	Rabi fodder-crops (excluding any crops shown above).	500	300	300					
	Sunn hemp	500	100	100					
	Other *rabi* fibres ..	600	200	200					
	Condiments and spices ..	3,300	1,000	1,000					
	Other *rabi* non-food-crops (excluding the crops shown above).	1,900	200	200					
	Total non-food-crops ..	7,500	4,700	4,700	67	83			
	GRAND TOTAL ..	92,200	34,900	32,400	67	83			

District.	Name of crop.	Estimated normal area under each crop.	Estimated area under each crop.		Estimated outturn as a percentage of the normal yield per unit of area		Dates by which the sowing of the crops generally commenced this year, and whether those dates were early, normal or late.	Dates by which the harvesting of the crops generally commenced this year, and whether those dates were early, normal or late.	Remarks by District Officers.
			Last year.	This year	Last year.	This year.			
		Acres.	Acres.	Acres.					
Hooghly.	Barley	300	100	100	58	83	End of December. Normal.	Not yet commenced.	The increase in area is due to favourable weather at sowing time. The outturn is anticipated to fall below the normal owing to insufficient rainfall later on.
	Boro or summer rice ..	2,000	1,000	1,000	67				
	Gram	5,000	800	3,100	67		Middle of November. Normal		
	Other *rabi* cereals (excluding wheat).	2,200	1,400	1,500	58				
	Other *rabi* pulses ..	25,100	4,500	9,800	67				
	Rabi fruits and vegetables (including root-crops). ..	15,000	4,000	9,500					
	Other *rabi* food-crops (excluding wheat).	13,800	4,000	7,500					
	Total food-crops ..	63,400	15,800	32,500	67	83			
	Tobacco	1,000	500	500	67	83	Middle of December. Normal.		
	Other *rabi* non-food-crops (excluding the crops shown above).	1,500	700	700			End of November. Normal.		
	Total non-food-crops ..	2,500	1,200	1,200	67	83			
	GRAND TOTAL ..	65,900	17,000	33,700	67	83			
Howrah.	*Boro* or summer rice ..	1,200	300	300	67	75	End of January. Normal	End of February. Normal.	The weather has been fair.
	Gram	100	100	100					
	Other *rabi* cereals (excluding wheat).	6,200	3,000	2,800			End of December. Normal.		
	Other *rabi* pulses ..	400	..	500					
	Rabi fruits and vegetables (including root-crops).	3,600	2,700	2,700					
	Total food-crops ..	11,500	6,100	6,400	67	75			
	Tobacco	200	100	200	67	75	January ..	March.	
	Other drugs and narcotics	100	100	100					
	Condiments and spices ..	1,300	300	300					
	Total non-food-crops ..	1,600	500	600	67	75			
	GRAND TOTAL ..	12,700	6,600	7,000	67	75			
Rajshahi.	Barley	2,700	3,200	3,200	75	80	November. Normal.	March. Normal.	The outturn is anticipated to fall below the normal owing to some damage caused by rain.
	Boro or summer rice ..	13,500	13,300	13,300					
	Gram	8,800	12,600	12,600	78	85			
	Other *rabi* cereals (excluding wheat).	4,000	7,600	7,600	75	78			
	Other *rabi* pulses ..	59,500	82,400	82,600					
	Rabi fruits and vegetables (including root-crops).	23,400	27,000	27,100	78				
	Other *rabi* food-crops (excluding wheat).	2,100	2,400	2,400	75				
	Total food-crops ..	114,000	148,500	148,800	76	79			
	Tobacco	3,400	3,700	3,800	85	80			
	Ganja	600	200	200	100	100			
	Rabi fodder-crops (excluding any crops shown above).	300	400	400	63	63			
	Sunn hemp	800	400	400	75	75			
	Other *rabi* fibres ..	1,000	1,600	1,600	50	50			
	Condiments and spices ..	6,800	8,200	8,300	75	75			
	Other *rabi* non-food-crops (excluding the crops shown above).	200	300	300	67	67			
	Total non-food-crops ..	13,100	14,800	15,000	75	73			
	GRAND TOTAL ..	127,100	163,300	163,800	76	78			

District.	Name of crop.	Estimated normal area under each crop.	Estimated area under each crop.		Estimated outturn as a percentage of the normal yield per unit of area.		Dates by which the sowing of the crops generally commenced this year, and whether those dates were early, normal or late.	Dates by which the harvesting of the crops generally commenced this year, and whether those dates were early, normal or late.	Remarks by District Officers.
			Last year.	This year.	Last year.	This year.			
		Acres.	Acres.	Acres.					
Dinajpur.	Barley	1,100	100	200	92	92	Middle of November. Normal.	Middle of February. Normal.	The weather has been fairly favourable. The yield of tobacco is satisfactory.
	Boro or summer rice ..	500	1,500	1,500	83	100			
	Gram	1,300	800	800	67	83			
	Other *rabi* cereals (excluding wheat).	3,500	3,600	3,600	83	83			
	Other *rabi* pulses ..	3,600	6,000	6,000		83			
	Rabi fruits and vegetables (including root-crops).	25,000	6,500	6,500		83			
	Other *rabi* food-crops (excluding wheat).	1,000	1,900	7,800		92			
	Total food-crops ..	36,000	20,400	26,400	83	87			
	Tobacco	14,000	13,000	13,000	67	100			
	Condiments and spices ..	600	800	700	75	83			
	Other *rabi* non-food-crops (excluding the crops shown above).	400	100	100	67	92			
	Total non-food-crops ..	15,000	13,900	13,800	67	90			
	GRAND TOTAL ..	51,000	34,300	40,200	77	91			
Jalpaiguri.	Barley	700	700	700	83	83	Middle of November. Normal.	Middle of February. Normal.	The weather has been fairly favourable. The general condition of tobacco seems to be good.
	Other *rabi* cereals (excluding wheat).	2,700	2,400	2,400					
	Other *rabi* pulses ..	9,900	8,600	8,400					
	Rabi fruits and vegetables (including root-crops).	14,500	10,900	10,900	92	92			
	Total food-crops ..	27,800	22,600	22,400	87	87			
	Tea	53,900	65,900	65,700	83	83			
	Tobacco	25,000	21,000	21,200					
	Other drugs and narcotics	500	400	300					
	Condiments and spices ..	1,500	1,300	1,200	92	92			
	Total non-food-crops ..	80,900	88,600	88,400	83	83			
	GRAND TOTAL ..	108,700	111,200	110,800	84	84			
Darjeeling.	Barley	900	800	800	100	100	October. Normal.	January. Normal.	The weather has been favourable.
	Boro or summer rice ..	600	600	600					
	Other *rabi* cereals (excluding wheat).	800	1,000	1,000	83	83			
	Other *rabi* pulses ..	1,900	1,600	1,600	100	100			
	Rabi fruits and vegetables (including root-crops).	800	900	900	83	83			
	Other *rabi* food-crops (excluding wheat).	3,000	3,600	3,600	83	83			
	Total food-crops ..	8,000	8,500	8,500	89	89			
	Tea	30,000	30,800	30,800	100	100			
	Tobacco	300	400	400	75	75			
	Condiments and spices ..	500	500	500	100	100			
	Other *rabi* non-food-crops (excluding the crops shown above).	700	700	700					
	Total non-food-crops ..	31,500	32,400	32,400	100	100			
	GRAND TOTAL ..	39,500	40,900	40,900	97	97			

District.	Name of crop.	Estimated normal area under each crop.	Estimated area under each crop.		Estimated outturn as a percentage of the normal yield per unit of area.		Dates by which the sowing of the crops generally commenced this year, and whether those dates were early, normal or late.	Dates by which the harvesting of the crops generally commenced this year, and whether those dates were early, normal or late.	Remarks by District Officers.
			Last year.	This year.	Last year.	This year.			
		Acres.	Acres.	Acres.					
Rangpur.	Barley	500	700	700					
	Boro or summer rice ..	8,300	12,000	11,000					
	Gram	1,100	900	1,000			Latter part of November. Normal.	March. Normal.	The weather has been favourable and the prospects of tobacco crop are satisfactory.
	Other *rabi* cereals (excluding wheat).	3,500	9,000	9,500	90	90			
	Other *rabi* pulses ..	43,900	45,500	45,500					
	Rabi fruits and vegetables (including root-crops).	20,000	28,500	28,000			End of November. Normal.		
	Total food-crops ..	77,300	96,600	95,700	90	90			
	Tobacco	184,600	200,500	200,500	80	90	October. Normal.	End of February. Normal.	
	Condiments and spices ..	1,800	3,000	3,000	90		Early in November. Normal.	February. Normal.	
	Total non-food-crops ..	186,400	203,500	203,500	80	90			
	GRAND TOTAL ..	263,700	300,100	299,200	83	90			
Bogra.	Barley	200	600	600					
	Boro or summer rice ..	300	1,000	12,000					
	Gram	3,000	7,000	7,000					
	Other *rabi* cereals (excluding wheat).	3,100	9,000	9,000	65	75			
	Other *rabi* pulses ..	15,400	25,000	25,500					
	Rabi fruits and vegetables (including root-crops).	3,600	12,000	12,800					
	Other *rabi* food-crops (excluding wheat).	8,900	15,000	15,000			Beginning of November.	February and March.	The outturn is anticipated to fall below the normal owing to some damage done by drought.
	Total food-crops ..	34,500	69,600	81,900	65	75			
	Tobacco	1,000	1,800	1,900	60	70			
	Condiments and spices ..	1,400	2,000	2,500	65	75			
	Other *rabi* non-food-crops (excluding the crops shown above).	300	500	500					
	Total non-food-crops ..	2,700	4,300	4,900	63	73			
	GRAND TOTAL ..	37,200	73,900	86,800	65	75			
Pabna.	Barley	10,800	7,400	8,000		83	Middle of November. Normal.	Not yet commenced.	
	Boro or summer rice ..	5,300	5,000	7,700		92			
	Gram	11,800	10,000	11,700		83	Middle of January. Normal.		
	Other *rabi* cereals (excluding wheat.)	36,000	26,600	20,000	67	92			The outturn is anticipated to fall below the normal owing to unfavourable weather condition.
	Other *rabi* pulses ..	96,500	110,000	110,000		75	November. Normal.		
	Rabi fruits and vegetables (including root-crops).	5,000	3,100	3,000		75			
	Other *rabi* food-crops (excluding wheat).	4,300	5,000	4,000		75			
	Total food-crops ..	1,69,700	167,100	164,400	67	79			
	Tobacco ..	4,500	5,000	3,100		75			
	Other drugs and narcotics	600	(26)	100		75	Middle of December. Normal.	Not yet commenced.	
	Rabi fodder-crops (excluding any crops shown above).	1,000	1,000	300		83			
	Sunn hemp ..	10,000	9,500	7,900	67	67			
	Other *rabi* fibres ..	400	200	100		67	..	Middle of January. Normal.	
	Condiments and spices ..	14,300	8,600	12,900		83			
	Other *rabi* non-food-crops (excluding the crops shown above).	200	100	..		..			
	Total non-food-crops ..	31,000	24,400	24,300	67	77			
	GRAND TOTAL ..	200,700	191,500	188,700	67	79			

District.	Name of crop.	Estimated normal area under each crop.	Estimated area under each crop.		Estimated outturn as a percentage of the normal yield per unit of area.		Dates by which the sowing of the crops generally commenced this year, and whether those dates were early, normal or late.	Dates by which the harvesting of the crops generally commenced this year, and whether those dates were early, normal or late.	Remarks by District Officers.
			Last year.	This year.	Last year.	This year.			
		Acres.	Acres.	Acres.					
Malda.	Barley	39,100	18,000	18,000	83	83	Middle of November. Normal.	Not yet commenced.	The outturn is anticipated to fall below the normal owing to some damage caused by insect-pests and rain.
	Boro or summer rice ..	38,600	12,000	16,000	92	100	Middle of January. Normal.		
	Gram	21,200	10,200	10,000	83	75	Middle of November Normal.		
	Other *rabi* cereals (excluding wheat).	20,600	18,800	18,800	75	75			
	Other *rabi* pulses ..	31,700	25,600	25,000	92	75			
	Rabi fruits and vegetables (including root-crops).	2,200	1,400	1,400	100	80			
	Other *rabi* food-crops (excluding wheat).	12,100	7,200	7,200	92	80			
	Total food-crops ..	165,500	93,200	97,000	84	81			
	Tobacco	7,700	5,600	5,600	67	67	Middle of November. Normal.	End of January. Normal.	
	Condiments and spices ..	1,500	1,500	1,500	83	83			
	Other *rabi* non-food-crops (excluding the crops shown above).	11,300	2,900	2,900					
	Total non-food-crops ..	20,500	10,000	10,000	74	74			
	GRAND TOTAL ..	186,000	103,200	107,000	83	80			
Dacca.	Barley	12,600	14,500	13,600	61	81	November. Normal, except *boro* rice, which is transplanted in December.	End of February, except *boro* rice, which will be harvested end of March.	For want of timely rainfall the growth of the crops has been hampered. The yield of tobacco is expected to be satisfactory owing to recent rain.
	Boro or summer rice ..	44,700	51,300	52,900	69	79			
	Gram	2,700	4,100	5,200	72	84			
	Other *rabi* cereals (excluding wheat).	35,300	38,200	39,900	76	76			
	Other *rabi* pulses ..	64,600	39,500	32,800	65	96			
	Rabi fruits and vegetables (including root-crops).	101,600	108,100	111,200	67	86			
	Other *rabi* food-crops (excluding wheat).	125,500	42,000	42,000	60	60			
	Total food-crops ..	387,000	297,700	297,600	67	81			
	Tobacco	9,000	10,400	11,000	76	79			
	Sunn hemp	200	100	100	50	50			
	Other *rabi* fibres (excluding sunn hemp).	700	300	300					
	Condiments and spices ..	19,200	21,000	21,000	58	71			
	Other *rabi* non-food-crops (excluding the crops shown above).	3,000	2,200	2,200	50	50			
	Total non food-crops ..	32,100	34,000	34,600	63	72			
	GRAND TOTAL ..	419,100	331,700	332,200	67	80			

District.	Name of crop.	Estimated normal area under each crop.	Estimated area under each crop.		Estimated outturn as a percentage of the normal yield per unit of area.		Dates by which the sowing of the crops generally commenced this year, and whether those dates were early, normal or late.	Dates by which the harvesting of the crops generally commenced this year, and whether those dates were early, normal or late.	Remarks by District Officers.
			Last year.	This year.	Last year.	This year.			
		Acres.	Acres.	Acres.					
Mymensingh.	Barley	8,000	8,000	8,000			December. Normal.		
	Boro or summer rice ..	194,000	225,400	225,400					
	Gram	2,500	2,500	2,500					
	Other *rabi* cereals (excluding wheat).	57,000	37,100	37,100	90	100	Latter part of November. Normal.	Will begin in April. Normal.	The weather has been favourable. The prospects of tobacco crop are satisfactory.
	Other *rabi* pulses ..	63,600	52,300	52,300					
	Rabi fruits and vegetables (including root-crops).	59,000	57,700	57,700					
	Other *rabi* food-crops (excluding wheat).	34,900	34,700	34,700					
	Total food-crops ..	419,000	417,700	417,700	90	100			
	Tobacco	11,800	15,500	15,500			November. Normal.	March. Normal.	
	Rabi fodder-crops (excluding any crops shown above).	1,600	1,300	1,800					
	Sunn hemp	28,000	20,000	20,000	90	100			
	Other *rabi* fibres ..	400	400	400					
	Condiments and spices ..	16,300	8,700	8,700					
	Other *rabi* non-food-crops (excluding the crops shown above).	1,100	600	600					
	Total non-food-crops ..	59,200	46,500	46,500	90	100			
	GRAND TOTAL ..	478,200	464,200	464,200	90	100			
Faridpur.	Barley	11,700	10,500	10,700	75	75	Beginning of November. Normal.	..	The increase in area is due to propaganda for the extensive cultivation of *rabi* crops instead of jute. Prolonged drought has adversely affected the crops and hence the outturn is expected below the normal.
	Boro or summer rice ..	14,400	21,300	21,500		83			
	Gram	3,600	3,800	4,000		75			
	Other *rabi* cereals (excluding wheat).	67,900	54,300	54,600	83	83			
	Other *rabi* pulses ..	61,700	42,100	42,200					
	Rabi fruits and vegetables (including root-crops).	39,100	34,000	34,100					
	Other *rabi* food-crops (excluding wheat).	4,100	5,300	5,400					
	Total food-crops ..	202,500	171,300	172,500	83	82			
	Tobacco	4,400	5,000	5,200					
	Rabi fodder-crops ..	500	700	800	83	83			
	Sunn hemp	700	400	500					
	Other *rabi* fibres ..	200	500	500	75	75			
	Condiments and spices ..	28,300	34,000	34,500	83	83			
	Other *rabi* non-food-crops (excluding the crops shown above).	100	100	100	75	75			
	Total non-food-crops ..	34,200	40,700	41,600	83	83			
	GRAND TOTAL ..	236,700	212,000	214,100	83	82			

District.	Name of crop.	Estimated normal area under each crop.	Estimated area under each crop.		Estimated outturn as a percentage of the normal yield per unit of area.		Dates by which the sowing of the crops generally commenced this year, and whether those dates were early, normal or late.	Dates by which the harvesting of the crops generally commenced this year, and whether those dates were early, normal or late.	Remarks by District Officers.
			Last year.	This year.	Last year.	This year.			
		Acres.	Acres.	Acres.					
Pabnagunj.	*Boro* or summer rice ..	4,400	4,400	4,000					
	Gram	..	..	200					
	Other *rabi* cereals (excluding wheat).	15,100	30,000	32,000					
	Other *rabi* pulses ..	45,900	50,000	55,000	100	100			
	Rabi fruits and vegetables (including root-crops).	21,600	30,000	35,000			November and December Normal.	February. Little early.	The increase in area is due to jute restriction and subsequent propaganda for cultivation of *rabi* crops. The weather was not favourable at the beginning of the season but subsequent rain has improved the growth of the crops and a normal outturn is expected.
	Other *rabi* food-crops (excluding wheat).	1,000	2,000	2,000					
	Total food-crops ..	88,000	116,400	128,200	100	100			
	Tobacco ..	500	1,200	1,500					
	Sunn hemp	..	200	300	100	100			
	Condiments and spices ..	19,200	5,000	6,000					
	Total non-food-crops ..	19,700	6,400	7,800	100	100			
	GRAND TOTAL ..	107,700	122,800	136,000	100	100			
Chittagong.	*Boro* or summer rice ..	6,400	6,400	6,400			February. Normal.	Not yet commenced.	The weather has not been favourable on the hole. The outturn is anticipated to fall below the normal owing to absence of sufficient rainfall.
	Other *rabi* cereals (excluding wheat).	600	600	600			End of December. Normal.	February. Normal.	
	Other *rabi* pulses ..	2,800	2,800	2,800	100	80	November and December. Normal.	January and February. Normal.	
	Rabi fruits and vegetables (including root-crops).	3,400	3,400	3,400					
	Other *rabi* food-crops (excluding wheat).	3,000	3,000	3,000			....	December and January. Normal.	
	Total food-crops ..	16,200	16,200	16,200	100	80			
	Tea	2,500	3,100	6,300			November and December. Normal.	February. Normal.	
	Tobacco	2,600	2,600	2,600					
	Rabi fodder-crops (excluding any crops shown above).	100	100	100	100	80	November. Normal.	February. Normal.	
	Sunn hemp	1,700	1,700	1,700			October and November. Normal.	January and February. Normal.	
	Condiments and spices ..	7,000	7,000	7,000					
	Other *rabi* non-food-crops (excluding the crops shown above).	8,000	8,000	8,000					
	Total non-food-crops	21,900	22,500	25,700	100	80			
	GRAND TOTAL .	38,100	38,700	41,900	100	80			

District.	Name of crop.	Estimated normal area under each crop.	Estimated area under each crop.		Estimated outturn as a percentage of the normal yield per unit of area.		Dates by which the sowing of the crops generally commenced this year, and whether those dates were early, normal or late.	Dates by which the harvesting of the crops generally commenced this year, and whether those dates were early, normal or late.	Remarks by District Officers.
			Last year.	This year.	Last year.	This year.			
		Acres.	Acres.	Acres.					
Tippera.	*Boro* or summer rice ..	30,400	27,200	27,700	75	83	December. Normal.	Will begin in April. Normal.	The outturn fell below the normal owing to dearth of rain.
	Gram	300	300	300	50	50			
	Other *rabi* cereals (excluding wheat).	..	100	100	83	67			
	Other *rabi* pulses ..	7,500	59,800	60,100	75	67			
	Rabi fruits and vegetables (including root-crops).	8,200	7,100	8,000	75	67			
	Other *rabi* food-crops (excluding wheat).	14,800	11,900	9,900	67	67			
	Total food-crops ..	61,200	106,400	106,100	75	71			
	Tobacco	3,000	3,700	3,800	75	67			
	Rabi fodder-crops (excluding any crops shown above).	3,000	2,700	2,700					
	Sunn hemp	100	1,200	1,200	67				
	Condiments and spices ..	19,800	15,300	15,300	75				
	Other *rabi* non-food-crops (excluding the crops shown above).	500	1,000	1,000					
	Total non-food-crops ..	26,400	23,900	24,000	75	67			
	GRAND TOTAL ..	87,600	130,300	130,100	75	70			
Noakhali.	*Boro* or summer rice ..	500	500	500	70	75	December. Normal.	February. Normal. April. Normal.	The weather has been fair.
	Gram	100	100	100					
	Other *rabi* cereals (excluding wheat).	400	700	700					
	Other *rabi* pulses ..	44,000	60,000	60,100					
	Rabi fruits and vegetables (including root-crops).	74,000	77,000	77,100					
	Other *rabi* food-crops (excluding wheat).	9,900	9,900	9,900					
	Total food-crops ..	128,900	148,200	148,400	70	75			
	Condiments and spices ..	24,400	25,000	25,100	70	75			
	Other *rabi* non-food-crops (excluding the crops shown above).	100	100	100					
	Total non-food-crops ..	24,500	25,100	25,200	70	75			
	GRAND TOTAL ..	153,400	173,300	173,600	70	75			
Chittagong Hill Tracts.	Other *rabi* cereals ..	100	100	100	83	83	December. Normal.	February. Normal.	The weather has been fairly favourable.
	Other *rabi* pulses ..	100	100	100					
	Rabi fruits and vegetables (including root-crops).	4,800	4,800	4,800					
	Total food-crops ..	5,000	5,000	5,000	83	83			
	Tea	100	100	100	58	58			
	Tobacco	3,800	3,800	3,800	83	83			
	Other *rabi* fibres ..	1,800	1,800	1,800	92	92			
	Condiments and spices ..	1,000	1,000	1,000	92	92			
	Total non-food-crops ..	6,700	6,700	6,700	86	86			
	GRAND TOTAL ..	11,700	11,700	11,700	85	85			

Districts.	Name of crop.	Estimated normal area under each crop.	Estimated area under each crop.		Estimated outturn as a percentage of the normal yield per unit of area.		Dates by which the sowing of the crops generally commenced this year, and whether those dates were early, normal or late	Dates by which the harvesting of the crops generally commenced this year, and whether those dates were early, normal or late	Remarks by District Officers.
			Last year	This year	Last year	This year			
		Acres	Acres.	Acres					
Total Bengal	Barley	112,600	90,000	95,300	73	83			
	Boro or summer rice ..	413,600	403,700	432,300	85	92			
	Gram	308,500	182,900	241,900	62	76			
	Other *rabi* cereals (excluding wheat).	406,900	299,700	298,100	75	82			
	Other *rabi* pulses ..	791,900	741,100	802,000	75	81			
	Rabi fruits and vegetables (including root-crops)	524,500	495,000	509,700	76	85			
	Other *rabi* food-crops (excluding wheat)	277,100	164,000	172,200	73	79			
	Total food-crops ..	2,835,100	2,376,400	2,551,500	76	83			
	Tea	86,500	99,900	102,900	89	88			
	Tobacco	291,300	307,100	307,300	79	88			
	Ganja	600	200	200	100	100			
	Other drugs and narcotics.	1,700	600	700	78	82			
	Rabi fodder-crops (excluding any crops shown above).	20,300	21,100	23,700	50	73			
	Sunn hemp	42,700	34,000	32,800	83	89			
	Other *rabi* fibres ..	5,100	5,000	4,900	72	74			
	Condiments and spices ..	190,700	164,400	173,300	74	78			
	Other *rabi* non-food-crops (excluding the crops shown above).	44,000	27,700	24,500	77	79			
	Total non-food-crops ..	682,900	660,000	670,300	79	85			
	GRAND TOTAL ..	3,518,000	3,036,400	3,221,800	76	84			

APPENDIX II.

Abstract statement of the estimated acreage and outturn of the summer rice crop, 1936-37.

Province	Area (in acres).							Yield (in tons).						
	Of current year's crop	Of previous year's crop	Average of preceding—		Percentage by which column 2 exceeds (+), or is less than (−), area in—			Estimated yield of current year, *i.e.*, of area in column 2	Yield of previous year, *i.e.*, of area in column 3	Average of preceding—		Percentage by which column 7 exceeds (+), or is less than (−), yield in—		
					Column 3	Column 4						Column 8.	Column 9.	
1	2	3	4		5	6		7	8	9		10	11	
			Five years.	*Ten years.*		*Five years.*	*Ten years.*			*Five years.*	*Ten years.*		*Five years.*	*Ten years.*
Bengal ..	432,300	403,700	394,900	395,400	+7	+9 47	+9 33	219,200	189,100	182,900	168,700	+15 92	+19 85	29·93

CORPORATION OF CALCUTTA.

NOTICES.

Central Municipal Office, the 23rd March 1937.

It is hereby notified for general information that the Corporation of Calcutta under powers vested in them in this behalf have by a resolution, dated the 10th March 1937, prescribed the alignment of a 20 feet projected public street connecting Olai Chandi Road with a new Calcutta Improvement Trust Road in the open space in Cossipore in Ward No. 30.

A copy of the plan prepared in this behalf may be seen in the office of the Chief Valuer and Surveyor of the Corporation any day except Saturday between the hours of 11 a.m. and 3 p.m. on payment of usual fees.

Central Municipal Office, the 1st April 1937.

In accordance with the provisions of section 486 of the Calcutta Municipal Act, 1923, it is hereby notified for general information that the Government of Bengal in the Ministry of Local Self-Government have, in their letter No. 598M., dated the 4th February 1937, sanctioned, under section 483 of the Act, the following rules framed by the Corporation in supersession of the existing rules, under sections 71(*9*) and 75(*4*) of the Act, for regulating the conduct of business at the meetings of Standing Committees and their Sub-Committees and of Special Committees of the Corporation :—

Rules framed by the Corporation under sections 71 (9) and 75 (4) of the Calcutta Municipal Act, 1923.

[*For the conduct of business at the meetings of the Standing Committees of the Corporation and their Sub-Committees and of Special Committees.*]

1. *Dates and times of meetings.*—Meetings of Committees shall be called by the Secretary at such times and on such days as may be convenient, subject to any directions which may be given by the Corporation, or the Committee concerned or by the Chairman, or in his absence by the Deputy Chairman of the Committee concerned.

2. *Appointment of President.*—Every Committee shall appoint two of their members to be their Chairman and Deputy Chairman. At the first meeting of every Committee the first business shall be to choose a Chairman and a Deputy Chairman.

In the absence of the Chairman or the Deputy Chairman, the members of the Committee present shall choose one of their members to preside over the meeting for that particular occasion.

3. *Quorum.*—The quorum of any Committee shall be such a number as exceeds by one one-sixth of the number of members on the Committee.

4. *Vacancies in Committees.*—Every vacancy in any Standing or Special Committee or Sub-Committee shall be notified to the Corporation or to the parent Committee, as the case may be, at their next meeting after such vacancy shall have occurred, whereon such vacancy may be filled up.

5. *Information for Committee.*—The Executive Officers or other heads of departments may be present at meetings of Committees when matters relating to their respective departments are being discussed and may put before the Committee the point of view of the department. The abovementioned officers shall, if required by the Committee to do so, attend the meeting of the Committee and place before it all information in their possession.

6. *Reports to be signed by the Chairman.*—The reports of all Committees presented to the Corporation shall be signed by the Chairman, or in his absence by the Deputy Chairman or in his absence by the member presiding.

7. *Submission of resolution by Councillor or Alderman.*—Any Councillor or Alderman may submit to a meeting of any Committee any motion pertaining to any matter within the purview of that Committee provided that he shall give not less than three days' previous notice thereof in writing to the Secretary.

8. *Circulation of the list of business and notice of resolution.*—The Secretary shall send to every member of a Committee not less than forty-eight hours before the time of meeting a list of the business to be transacted at each meeting of the said Committee including any motion of which he may have received notice under rule 7.

9. No Alderman or Councillor, who is not a member of a Committee shall be present at a meeting of the Committee unless invited or unless permitted by the Chairman of the meeting. A Councillor or Alderman, who has given notice of a motion under rule 7 shall be invited to attend the meeting of a Committee only when such motion is taken up for discussion. He may take part in discussion of the motion but he shall not vote.

10. *Mode of deciding a question.*—Every question brought before a Committee shall be decided by a majority of votes of the members voting on that question, the Chairman or the Member presiding having a second or a casting vote in case of equality of votes.

11. *Adjournments of meetings if no quorum.*—If at the expiration of 15 minutes after the hour at which any meeting is appointed to be held on a particular day the number necessary to form a quorum be not present, no business shall be transacted on that day. If at any time during the meeting there is no quorum the meeting shall terminate. Any member may at any time during the meeting move for the adjournment of the meeting and if the motion is carried, such meeting shall be adjourned to such other day as may be found convenient.

12. *Action in case of no quorum.*—If there is no quorum present on three successive occasions when the meeting has been called, the matter shall be placed before the Corporation, or in the case of Sub-Committees, before the parent Committee for necessary directions.

13. *Appointments.*—In determining the question of the appointment of a candidate for employment in the Corporation, the members of the Committee shall proceed by the system of elimination until one candidate obtains an absolute majority of the votes of the members present and voting. The Committee shall decide in each case of appointment the method of voting.

14. *President to regulate business.*—The Chairman or the member presiding shall regulate the course of all business brought forward at the meetings of the Committee. He shall preserve order and all points of order shall be decided by him. No discussion on any point of order shall be allowed. Any member may, at any time, submit a point of order to the decision of the President.

No matter shall be brought forward at any meeting, or if such meeting be adjourned at the adjourned meeting, which at the same meeting or at the adjourned meeting has been disposed of by the Committee.

Amendments having the mere effect of a negative vote shall not be moved.

15. A motion from a Councillor or Alderman to rescind or alter a resolution of a Committee must reach the Secretary within a fortnight of the passing of such resolution. Such a motion shall be considered by the Committee at its next meeting.

No motion for reconsideration or rescission of a resolution passed by a Committee shall be entertained if the Committee has once reconsidered the matter and arrived at a decision thereon:

Provided that it shall be open to the Chief Executive Officer to bring up any matter for reconsideration at any time on sufficient grounds.

16. The Chairman of any Committee shall be entitled to bring up before the Committee any item of business within the purview of the Committee and get it included in the agenda for the meeting.

17. If in any case the Chief Executive Officer is satisfied that the proceedings of any Committee in any respect are in contravention of the Act, he shall forthwith place the matter before the Committee for further consideration.

J. C. MUKERJEA,
Chief Executive Officer.

DISTRICT REPORTS ON WEATHER AND CROPS.

For the week ending on the 24th March 1937.

Summary.—During the week the rainfall was generally light and scattered. More rain is badly needed for sowings of jute and paddy. Harvesting of *rabi* crops is continuing. Prospects of standing crops are generally fair. The average price of common rice for the Province has fallen by about 0·09 per cent. as compared with that of the previous week.

Serial No.	District and sub-division.	Rainfall.	Price of common rice, in seers, per rupee.		Character of the weather, condition of crops, etc.
			This week.	Previous week.	
1	2	3	4	5	6
		Inches.			
1	24-Parganas ..	0·16	11 $\frac{4}{16}$	11	Weather seasonable. Fodder and water are sufficient. Condition of crop is favourable. No large export or import of paddy is reported. Cattle-disease is reported from Hasnabad police-station.
	Diamond Harbour..	Nil	11¾	11¾	
	Barrackpore .	Nil	12	12	
	Baraset ..	0·50	12	12	
	Basirhat ..	Nil	13	13	
2	Nadia ..	0·02	11 $\frac{13}{16}$	11¾	Weather seasonable. Prospects of standing crops are, on the whole, fair, but in Meherpur it is bad. *Rabi* crops are being harvested in the Kushtia subdivision. Fodder and water are sufficient. No large import or export.
	Kushtia ..	0·00	11	11	
	Meherpur ..	0·00	10	10	
	Chuadanga ..	0·20	11½	11½	
	Ranaghat ..	0·00	9½	9½	
3	Murshidabad ..	Nil	13	13	Weather seasonable. Prospects of crops are favourable. Fodder and water are sufficient. No large import or export. Stock of rice is sufficient. Cattle-disease is reported from Kandi subdivision.
	Lalbagh ..	Nil	13	13	
	Jangipur ..	Nil	13	13	
	Kandi ..	Nil	14	14	
4	Jessore ..	Nil	11½	11½	Weather seasonable. Prospects of standing crops are fair. No large export or import. Fodder and water are sufficient. Cattle-disease is reported from Magura and Sripur police-stations.
	Jhenidah ..	Nil	12	12	
	Magura ..	Nil	11	11	
	Narail ..	Nil	11	11	
	Bongaon ..	Nil	12	12	
5	Khulna ..	Nil	13	13	Weather seasonable. Fodder and water are sufficient.
	Satkhira ..	0·12	13	13	
	Bagerhat ..	Nil	11	11	

Serial No.	District and sub-division.	Rainfall.	Price of common rice, in seers, per rupee.		Character of the weather, condition of crops, etc.
			This week.	Previous week.	
1	2	3	4	5	6
		Inches.			
6	Burdwan ..	Nil	9½*	9½	Weather seasonable. Condition of crop is favourable. Fodder and water are sufficient.
	Asansol ..	Nil	10*	10	
	Katwa ..	Nil	13	13	
	Kalna ..	Nil	8¼*	8¼	
7	Birbhum ..	Nil	13	13	Weather seasonable. Prospects of standing crops are good. Fodder and water are sufficient.
	Rampurhat ..	Nil	13	13	
8	Bankura ..	0·00	13	13½	Weather seasonable. Ploughing of land continues. Prospects of standing crops are good. No large export or import. Fodder and water are sufficient. Cattle-disease is reported from Bankura and Taldangra thanas.
	Vishnupur ..	0·03	13¾	13¾	
9	Midnapore ..	Nil	13	13	Fodder and water are sufficient. Sowing of sugarcane continues.
	Contai ..	Nil	14	14	
	Tamluk ..	0·10	15	13	
	Ghatal ..	0·50	15¾	14½	
	Jhargram ..	0.41	13	13	
10	Hooghly ..	Nil	10½	10½	Weather seasonable. Fodder and water are sufficient.
	Serampore ..	Nil	11	11	
	Arambagh ..	Nil	11	11	
11	Howrah ..	0·07	10	10½	Weather seasonable. Its effects are good. Fodder and water are sufficient.
	Uluberia ..	1·16	10	10	
12	Rajshahi (Rampur-Boalia).	Nil	10	10	Weather seasonable. Fodder and water are sufficient.
	Naogaon ..	Nil	11½	11½	
	Nator ..	Nil	10½	10½	
13	Dinajpur ..	Nil	10	10	Weather seasonable. Fodder and water are sufficient. Cattle-disease is reported from Birganj and Phulbaria police-stations.
	Thakurgaon ..	Nil	13	13	
	Balurghat ..	Nil	13 1/16	13 1/16	
14	Jalpaiguri ..	(n)	(n)	13	Not reported.
	Alipur ..	(n)	(n)	12	

(n) Not reported. * Old.

Serial No.	District and sub-division.	Rainfall.	Price of common rice, in seers, per rupee.		Character of the weather, condition of crops, etc.
			This week.	Previous week.	
1	2	3	4	5	6
		Inches.			
15	Darjeeling ..	Nil	8	8	Sowing of *bhutta* progressing. Fodder and water are sufficient.
	Kurseong ..	Nil	9	9	
	Siliguri ..	Nil	12	12	
	Kalimpong ..	Nil	7½	7	
16	Rangpur ..	Nil	11½	11½	Weather seasonable. Prospects of standing crops are fair. No large export or import. Fodder and water are sufficient. Sowing of *aus* paddy and jute in low lands continues.
	Nilphamari ..	Nil	11	11½	
	Kurigram ..	(*n*)	(*n*)	10	
	Gaibandha ..	(*n*)	(*n*)	10	
17	Bogra ..	Nil	12¾	12½	Agricultural operation not affected by weather condition. Ploughing going on as usual. Condition of standing crops is fair. Fodder and water are sufficient. No damage is reported.
18	Pabna ..	0·09	12	12	Weather seasonable. Condition of standing crops is good. Harvesting of *rabi* crops still continues. Fodder and water are sufficient.
	Serajganj ..	Nil	10¾	10¾	
19	Malda ..	Nil	13	13	Weather seasonable. Prospects of standing crops are fair. Harvesting of *rabi* crops continues. Fodder and water are available.
20	Cooch Behar ..	(*n*)	(*n*)	(*n*)	Report not received.
21	Dacca ..	Nil	10¾	11	Rainfall at North Sadar (Kapasia) 0·10 inches. Weather seasonable. Prospects of standing crops are reported to be good. No large export or import. Fodder and water are sufficient. Cattle-disease exists in Keraniganj police-station.
	Manikganj ..	Nil	10½	10½	
	Narayanganj ..	0·06	12	12	
	Munshiganj ..	Nil	10¾	10¾	

(*n*) Not reported.

Serial No.	District and sub-division.	Rainfall.	Price of common rice, in seers, per rupee.		Character of the weather, condition of crops, etc.
			This week.	Previous week.	
1	2	3	4	5	6
		Inches.			
22	Mymensingh ..	Nil	10½	10½	Fodder and water are available
	Jamalpur ..	(n)	(n)	11½	
	Tangail ..	Nil	11	11	
	Netrakona ..	(n)	(n)	11¾	
	Kishorganj ..	0·18	10½	10½	
23	Faridpur ..	0.00	12	12	Weather seasonable. Condition of standing crops is fair. Fodder and water are sufficient.
	Goalundo (Rajbari)	0·10	10½	12½	
	Madaripur ..	0·00	11½	11½	
	Gopalganj (a) ..	0·00	12	12½	
24	Bakarganj (Barisal)	Nil	11	11	Weather seasonable. Prospects of standing crops are good in all subdivisions except in Bhola where it is fair. Fodder and water are sufficient. Cattle-disease is reported from Bhola subdivision.
	Pirojpur ..	0·40	11¼	11¼	
	Patuakhali ..	0·66	10½	11½	
	Dakshin Shabazpur (Bhola).	0·72	11¾	11	
25	Chittagong ..	0·04	11 12*	10 9½*	Weather seasonable. Condition of *rabi* crops is unsatisfactory for want of rainfall. Fodder and water are available. Cattle-disease exists in places. Panga salt sells at 14½ seers at Sadar.
	Cox's Bazar ..	(n)	(n)	12	
26	Tippera (Comilla) ..	0·06	13	13	Prospects of standing crops are fair.
	Brahmanbaria ..	0·30	13	13	
	Chandpur ..	Nil	12	12	
27	Noakhali ..	Nil	12	12	Fodder and water are sufficient. Cattle-disease still exists in Feni and Chhagalnaya thanas.
	Feni ..	Nil	13	13	
28	Chittagong Hill Tracts.	1·08	14	14	Weather seasonable. Its effects on agricultural operation are favourable. Fodder and water are sufficient.
29	Tripura State ..	(n)	(n)	(n)	Reports not received.

(a) The rainfall at Haridaspur, which is very near to Gopalganj, is shown here.

(n) Not reported. * Burma rice.

S. ABDULLAH, for *Director of Agriculture, Bengal.*

Dacca, the 29th March 1937.

Wholesale prices current of food grains, gur, etc., in the undermentioned marts of Bengal for the first half of March 1937.

Marts.	Paddy local (best quality).			Paddy local (common quality).			Rice local (best quality).		
	Present return.	Next preceding return.	Corresponding return of last year.	Present return.	Next preceding return.	Corresponding return of last year.	Present return.	Next preceding return.	Corresponding return of last year.
1	2	3	4	5	6	7	8	9	10
	Rs. a. p.	Rs. a. p.	Rs. a. p.	Rs. a. p.	Rs. a. p.	Rs. a. p.	Rs. a. p.	Rs. a. p.	Rs. a. p.
Calcutta	2 4 0	2 5 0	2 14 0	1 14 0	2 1 0	2 8 0	4 12 0	4 12 0	5 0 0
Burdwan	1 12 0	1 14 0	2 4 0	1 0 0	1 10 0	2 2 0	4 4 0	4 4 0	4 11 0
Midnapore	1 8 0	1 8 0	2 5 0	1 6 6	1 6 6	1 13 0	3 6 0	3 6 0	4 4 0
Chittagong	1 12 0	1 12 0	1 12 0	1 11 0	1 11 0	1 11 0	4 4 0	4 4 0	4 6 0
Dacca	2 4 0	2 4 0	2 2 0	2 0 0	2 0 0	1 15 0	4 0 0	4 4 0	(a)3 14 0
Pabna	2 4 0	2 4 0	2 4 0	2 2 0	2 2 0	1 12 0	3 14 0	3 14 0	4 4 0
Rangpur	1 12 0	1 12 0	1 14 0	1 10 0	1 10 0	1 10 0	4 8 0	4 8 0	4 8 0
Serajganj (Pabna)	..	..	..	..	..	..	..	..	..
Sarisabari (Mymensingh) ..	..	..	..	..	..	..	..	..	..
Narayanganj (Dacca)	..	..	..	..	..	..	..	..	..

Marts.	Rice local (common quality).			Wheat.			Raw cotton		
	Present return.	Next preceding return.	Corresponding return of last year.	Present return.	Next preceding return.	Corresponding return of last year.	Present return.	Next preceding return.	Corresponding return of last year.
	11	12	13	14	15	16	17	18	19
	Rs. a. p.	Rs. a. p.	Rs. a. p.	Rs. a. p.	Rs. a. p.	Rs. a. p.	Rs. a. p.	Rs. a. p.	Rs. a. p.
Calcutta	4 4 0	4 8 0	4 12 0	4 4 0	4 4 0	3 6 0 to 3 7 0	21 6 0	20 10 0	17 [illegible] 0
Burdwan	4 0 0	4 0 0	3 12 0	..	..	..	..	..	..
Midnapore	2 11 0	2 11 0	3 5 6	..	..	..	..	..	..
Chittagong	3 4 0	3 4 0	3 8 0	..	..	..	..	..	..
Dacca	3 10 0	3 10 0	(a)3 6 0	..	..	..	..	..	..
Pabna	3 6 0	3 6 0	3 6 0	..	..	..	..	..	..
Rangpur	3 8 0	3 8 0	3 12 0	..	..	..	..	..	..
Serajganj (Pabna)	..	..	..	..	..	..	..	..	..
Sarisabari (Mymensingh) ..	..	..	..	..	..	..	..	..	..
Narayanganj (Dacca)	..	..	..	..	..	..	..	..	..

Marts	Coal.			Raw jute (weighted average).			*Gur* (sugarcane).		
	Present return.	Next preceding return	Corresponding return of last year.	Present return.	Next preceding return.	Corresponding return of last year.	Present return.	Next preceding return.	Corresponding return of last year.
	20	21	22	23	24	25	26	27	28
	Rs. a. p.	Rs. a. p.	Rs. a. p.	Rs. a. p.	Rs. a. p.	Rs. a. p.	Rs. a. p.	Rs. a. p.	Rs. a. p.
Calcutta	0 8 6	0 9 6	0 6 6	5 14 0	5 12 0	6 8 0	3 0 0	2 12 0	3 4 0
Burdwan	..	..	..	..	..	..	4 0 0	4 2 0	4 2 0
Midnapore	..	..	..	..	..	..	3 12 0	3 12 0	4 8 0
Chittagong	..	..	..	..	..	..	4 8 0	4 8 0	4 0 0
Dacca	..	..	..	..	..	..	3 8 0	3 12 0	4 0 0
Pabna	..	..	..	..	..	..	2 0 0	2 0 0	3 0 0
Rangpur	..	..	..	..	..	..	3 8 0 to 4 0 0	3 8 0 to 4 0 0	3 14 0 to 4 0 0
Serajganj (Pabna)	..	..	..	5 0 0	5 0 0	5 4 0	..	..	..
Sarisabari (Mymensingh) ..	..	..	..	4 14 0 to 6 4 0	4 14 0 to 6 4 0	4 12 0 to 6 14 0	..	..	..
Narayanganj (Dacca)	..	..	..	5 4 0 to 5 14 0	5 0 0 to 6 0 0	4 12 0 to 6 0 0	..	..	..

(a) New.

Dacca, the 29th March 1937.

S. ABDULLAH for *Director of Agriculture, Bengal.*

Prices-current (retail) of common rice and salt in the districts of Bengal for the first half of March 1937.

Districts and Marts.	Quantity per rupee in seers of eighty tolas.								
	Common rice.						Salt.		
	Average.			Cheapest.					
	Present return.	Next preceding return.	Corresponding return of last year.	Present return.	Next preceding return.	Corresponding return of last year.	Present return.	Next preceding return.	Corresponding return of last year.
	S. CH.	S. CH.	S. CH.	S. CH.	S. CH.	S. CH.	S. CH.	S. CH.	S. CH.
PRESIDENCY DIVISION.									
24-Parganas—									
1 Chotla Hat ..	10 8	10 10	9 11	11 8	11 8	11 6	16 0C	16 0C	18 0
2 Mogra Hat ..	(a) 11 12	(a) 10 0	10 5	(a) 14 4	(a) 12 0	11 6	16 0C 15 0K	17 0C 16 0K	16 0
3 Calcutta-Boliaghata	9 12	8 12	8 8	10 0	10 0	8 12	19 2C 17 0K 15 14P	19 2C 17 0K 16 0P	16 0
Nadia—									
4 Goari	11 13	11 12	10 12	(a) 13 0	(a) 13 0	13 0	14 0P 14 0K	14 0P 14 0K	14 0P 14 0K
5 Ranaghat ..	9 8	9 8	10 5	11 12	11 12	12 10	14 0P 14 0K	14 0P 14 0K	14 0P 14 0K
Murshidabad—									
6 Berhampore ..	12 0	12 0	11 0	12 8	12 8	11 3	14 0K	14 0K	14 0K
7 Kandi .. .	(a) 14 0	(a) 13 8	11 8	(a) 14 8	(a) 14 8	12 0	13 0K 13 0B	13 0K 13 0B	14 8
8 Jangipur ..	12 8	12 8	11 0	(a) 13 0	(a) 13 8	11 8	16 0K	16 0K	16 0
Jessore—									
9 Sadar	11 8	11 8	12 0	12 8	12 8	13 0	15 0P 15 0K	15 0P 15 0K	15 0L 15 0K
10 Bongaon ..	9 8	9 8	10 0	11 8	11 8	12 8	14 8P 15 0K	14 8P 15 0K	14 8P 15 0K
Khulna—									
11 Sadar	(a) 11 0	(a) 11 8	12 0	(a) 14 0	(a) 13 0	14 8	16 0C 16 0K	13 0C 13 0K	16 0F 16 0K
12 Bagerhat ..	11 0	11 0	10 8	12 0	12 0	11 8	15 0K	15 0K	14 0
BURDWAN DIVISION.									
Burdwan—									
13 Sadar ..	9 6	9 6	11 0	9 10	9 12	10 4	13 0C 13 0K	13 0C 13 0K	14 8†
14 Kalna ..	(a) 11 4	11 4	9 4	(a) 12 8	12 8	10 0	18 0K	18 0K	16 0
Birbhum—									
15 Suri	13 0	12 8	11 0	13 8	13 8	11 4	14 0M	14 0M	14 0
16 Rampurhat ..	13 0	13 0	10 8	14 0	14 0	11 0	16 0C	16 0C	16 0
Bankura—									
17 Sadar	(a) 13 0	(a) 13 0	11 0	(a) 14 0	(a) 14 0	12 0	14 0P	14 0P	14 0P
18 Vishnupur ..	13 10	12 0	10 8	(a) 14 10	(a) 12 8	11 0	13 0P	13 0P	13 0

P—Panga. K—Karkach. B—Bombay. C—Crushed. F—Foreign.

N.B.—The prices of Karkach and Liverpool salt tally with each other in marts marked†.

(a) New. M—Madras.

Prices-current (retail) of common rice and salt in the districts of Bengal for the first half of March 1937.

Districts and Marts.	Quantity per rupee in seers of eighty tolas.								
	Common rice.						Salt.		
	Average.			Cheapest.					
	Present return.	Next preceding return.	Corresponding return of last year.	Present return.	Next preceding return.	Corresponding return of last year.	Present return.	Next preceding return.	Corresponding return of last year.
	S. CH.	S. CH.	S. CH.	S. CH.	S. CH.	S. CH.	S. CH.	S. CH.	S. CH.
BURDWAN DIVISION—*concld.*									
Midnapore—									
19 Sadar	13 0	13 0	12 6	14 0	14 0	13 1	14 0L	14 0L	14 0
20 Contai	(a) 14 0	(a) 14 0	11 0	(a) 16 0	(a) 15 0	12 0	(b) 21 0C	(b) 21 0C	32 0
Hooghly—									
21 Sadar	10 0	10 0	10 0	11 0	11 0	11 4	16 0P	16 0P	16 0
22 Arambagh ..	11 0	11 0	10 8	11 8	11 8	11 0	16 0P 15 0K	16 0P 15 0K	15 0P 14 4K
Howrah—									
23 Sadar ..	10 0	8 0	9 0	11 4	10 0	11 0	16 0C 13 0K	16 0C 12 8K	16 0
24 Uluberia ..	10 0	10 0	10 0	11 8	11 8	11 0	16 0C 13 4K	16 0C 13 4K	16 0
RAJSHAHI DIVISION.									
Rajshahi—									
25 Rampur-Boalia ..	12 0	(a) 11 0	(a) 10 8	13 0	(a) 12 8	(a) 12 0	14 0P 14 0K	13 0P 13 0K	12 0L 12 0K
26 Nator .. .	10 8	9 12	10 8	12 12	12 12	12 12	12 0C 12 0K	12 0C 12 0K	12 0L 12 12K
27 Dinajpur—Railbazar Hat.	9 0	9 0	(a) 12 8	10 12	10 12	(a) 13 0	10 0K	10 0K	10 0L 12 0K
28 Jalpaiguri—Sadar ..	(a) 12 0	(a) 12 0	12 0	(a) 13 0	(a) 13 0	14 8	13 0C	13 0C	13 0
Darjeeling—									
29 Sadar	7 8	7 8	9 8	8 8	8 8	10 4	10 8P 10 0K	10 8P 10 0K	10 0P 9 0K
30 Siliguri ..	12 0	12 0	11 8	13 0	13 0	12 0	12 0P 12 0K 12 0C	12 0P 12 0K 12 0C	12 0‡
Rangpur—									
31 Sadar	(a) 12 15	(a) 12 15	11 13	12 15	(a) 12 15	11 13	13 8P	13 8P	13 8
32 Nilphamari ..	(a) 12 8	(a) 12 8	12 0	12 10	(a) 12 10	13 0	12 8K	12 8K	12 8
33 Bogra—Sadar ..	(a) 12 12	(a) 12 12	11 12	(a) 13 2	(a) 13 2	12 4	12 0C	12 0C	12 0
Pabna—									
34 Sadar	(a) 12 0	(a) 12 0	11 8	(a) 12 8	(a) 12 8	12 0	14 8L 14 8K	14 8L 14 8K	14 0L 14 0K
35 Serajganj ..	10 8	10 8	12 8	11 0	11 0	12 12	16 0L 15 0K	16 0L 15 0K	16 0 15 0K
Malda—									
36 Sadar	(a) 12 0	(a) 12 8	12 0	(a) 13 0	(a) 13 0	13 0	15 0OK 14 8K	15 0OK 13 0K	14 0P 13 0K
37 Balia—Nawabganj	(a) 13 2	(a) 13 0	12 12	(a) 14 0	(a) 14 0	13 8	15 0OK 14 0K	15 0OK 14 0K	15 0P 14 0K

P—Panga. K—Karkach. C—Crushed. L—Liverpool.

‡ Prices of Karkach, Crushed and Panga salt tally with each other.

OK—Okha and other Indian varieties.

(a) New. (b) Profuse supply.

Prices-current (retail) of common rice and salt in the districts of Bengal for the first half of March 1937.

Districts and Marts.	Quantity per rupee in seers of eighty tolas.								
	Common rice.						Salt.		
	Average.			Cheapest.					
	Present return.	Next preceding return.	Corresponding return of last year.	Present return.	Next preceding return.	Corresponding return of last year.	Present return.	Next preceding return.	Corresponding return of last year.
	S. CH.	S. CH.	S. CH.	S. CH.	S. CH.	S. CH.	S. CH.	S. CH.	S. CH.
DACCA DIVISION.									
Dacca—									
38 Sadar ..	10 0	10 0	12 0	11 0	11 0	12 12	13 0C 13 0K	15 0C 15 0K	13 0L 13 0K
39 Mirkadim ..	10 12	11 0	11 8	11 8	12 0	12 8	15 0K	15 0K	14 0K
Mymensingh—									
40 Nasirabad ..	9 12	9 8	10 4	10 6	10 9	10 8	13 10L 13 10K	13 0L 12 0K	13 0K
41 Netrakona ..	(a) 12 0	(a) 11 8	12 8	(a) 13 0	(a) 12 8	13 5	13 4L 13 0K	13 4L 12 8K	13 4L 12 12K
Faridpur—									
42 Sadar ..	12 0	12 0	11 12	12 8	12 8	12 4	12 0K	12 0K	12 0
43 Rajbari ..	10 8	10 8	10 8	12 8	12 8	12 8	12 0C	12 0C	12 0
Bakarganj—									
44 Barisal ..	(a) 10 12	11 0	(a) 11 8	(a) 11 8	11 8	(a) 12 12	17 0C 16 15K	14 8C 14 8K	14 4L 14 0K
45 Perojpur ..	(a) 11 4	(a) 11 4	11 12	(a) 11 10	11 10	11 14	13 0C 13 0K	13 0C 13 0K	13 0†
CHITTAGONG DIVISION.									
Tippera—									
46 Comilla ..	(a) 12 5	(a) 12 5	10 11	(a) 13 6	(a) 13 6	11 7	14 8C	14 8C	12 13L 10 10K
47 Chandpur ..	11 8	11 8	12 8	12 8	12 8	13 5	16 0C	16 0C	15 0
Noakhali—									
48 Kalitara Hat ..	10 0	10 12	10 8	12 0	11 8	11 8	13 0C 10 8K	13 0C 10 8K	13 0 10 8K
49 Feni Hat ..	(a) 13 0	(a) 13 0	11 4	(a) 13 8	(a) 13 8	12 12	12 8C 10 8K	12 8C 10 8K	12 12 10 0K
Chittagong—									
50 Sadar ..	10 0	10 0	10 8	11 8	11 8	11 8	13 0P	13 0P	13 0
51 Cox's Bazar ..	10 8	11 0	10 0	11 8	12 0	13 0	13 0P	13 0P	13 0
52 Chittagong Hill Tracts—Rangamati.	13 0	13 0	12 0	15 0	15 0	14 0	13 0L 8 0K	13 0L 8 0K	10 8 7 0K

P—Panga. C—Crushed. K—Karkach. L—Liverpool.

N.B.—The prices of Karkach and Liverpool salt tally with each other in marts marked †.

(a) New.

Dacca, the 29th March 1937.

S. ABDULLAH, for *Director of Agriculture, Bengal.*

DEPARTMENT OF AGRICULTURE, BENGAL.

Daily Rainfall recorded in Bengal for the month of December 1936 published in the "Calcutta Gazette" of 28th January 1937.

ERRATA.

Dacca, the 22nd March 1937.

Page 105 of the gazette.—On 20th against Asansol (Observatory) *substitute* "Nil" *for* "0·01".

Page 107 of the gazette.—In columns "Total rainfall for the month" and "Total rainfall from 1st to 31st December 1936" against Asansol (Observatory) *substitute* "0·57" *for* "0·58" in each column.

S. ABDULLAH,

for *Director of Agriculture, Bengal.*

FORM C—BENGAL.

STATEMENT OF COTTON PRESSED IN THE BENGAL PRESIDENCY FOR THE WEEK ENDING THE 19th MARCH 1937.

[Section 5 (2) of the Cotton Ginning and Pressing Factories Act, 1925.]

Name of Division or block	Number of bales pressed.				District included in the block.
	During the week.	During the corresponding week last year.	Since 1st September 1936 (the date prescribed by the Local Government as the commencement of the season).	During the corresponding period last year.	
The Bengal Presidency	2,533 or 2,510·35 bales of 400 lbs. each.	2,526	20,474	24 574	All districts in the Presidency.

C. S. STEEL,

Chief Inspector of Factories, Bengal (offg.).

Statement showing the gauge readings at Dacca Waterworks Station on the river Buriganga for the week ending 20th March 1937.

Date.	At highest water.		At lowest water.		Commencement of—		Remarks.	
	Time.	Reading.	Time.	Reading.	Ebb tide.	Flow tide.	7 a.m.	5 p.m.
1937.								
14th March ..	11-0	5·1	7-0	4·4	11-14	7-12	4·4	4·7
15th " ..	11-30	5·2	7-0	4·45	11-44	7-14	4·45	4·8
16th " ..	12-0	5·25	7-0	4 5	12-16	7-14	4·5	4·75
17th " ..	13-0	5·3	7-0	4·45	13-16	7-16	4·45	4·8
18th " ..	14-0	5 0	7-0	4·35	14-18	7-16	4·35	4·6
19th " ..	16-0	4·75	8-30	4·1	16-16	8-44	4·3	4·65
20th " ..	17-0	4·6	11-0	3·9	17-18	11-16	4·4	4·6

Notable high and low water-levels of previous years.

		Taken at high tide.			Taken at low tide.
27th August	1906 ..	70·5	23rd February	1907 ..	51·06
5th September	1909 ..	66·86	13th "	1908 ..	51·06
10th August	1910 ..	69·86	12th March	1912 ..	51·06
1st "	1911 ..	68·46	6th "	1914 ..	50·60
13th "	1912 ..	67·16	22nd February	1915 ..	50·30
31st "	1915 ..	69·7	15th "	1916 ..	50·60
8th "	1916 ..	68·1	3rd March	1917 ..	51·0
12th "	1917 ..	67·1	21st February	1918 ..	51·40
13th "	1918 ..	69·12	26th "	1919 ..	50·4
2nd "	1919 ..	66·8	18th "	1920 ..	50·9
8th September	1920 ..	66·9	19th "	1921 ..	50·9
28th July	1921 ..	68·4	8th March	1922 ..	51·05
10th August	1922 ..	68·00	14th "	1923 ..	50·8
31st July	1923 ..	66·15	16th February	1924 ..	50·50
29th August	1924 ..	68·82	5th March	1925 ..	50·9
8th September	1925 ..	68·52	9th February	1926 ..	2·2
15th August	1926 ..	19·6	27th "	1927 ..	2·10
17th September	1927 ..	18·70	16th "	1928 ..	2·2
22nd August	1928 ..	20·0	21st "	1929 ..	2·0
13th July	1929 ..	17·8	24th "	1930 ..	2·3
12th September	1930 ..	18·65	28th "	1931 ..	2·2
16th August	1931 ..	21·7	18th "	1932 ..	1·8
6th September	1932 ..	18·5	6th "	1933 ..	2·10
7th "	1933 ..	17·80	26th March	1934 ..	2·40
23rd August	1934 ..	19·35	15th February	1935 ..	1·70
1st September	1935 ..	19·80	3rd March	1936 ..	1·90
21st August	1936 ..	19·35			

N.B.—Zero of the gauge at Dacca Waterworks prior to 11 a.m. on the 8th January 1926= —48·51 with reference to P. W. D. datum.

Zero of the gauge at Dacca Waterworks since 11 a.m. of the 8th January 1926=0·00 with reference to P. W. D. datum.

M. K. BHATTACHARJEE, *Executive Engineer,*
Khulna Division.

Khulna, the 25th March 1937.

Statement of weekly gauge readings on the river Ganges at Rampur Boalia for the week ending the 20th March 1937.

Date.	Hour.	Height of surface above P. W. D. datum.	Height of surface above P. W. D. datum on the same date last year.	Remarks.
1937.				
14th March	7 a.m.	37·66	35·20	Value of B. M. on Rajshahi College step = 64·73 P. W. D. Zero of gauge = 29·26 P. W. D.
15th "	7 "	37·66	35·15	
16th "	7 "	37·51	35·10	
17th "	7 "	37·46	35·05	
18th "	7 "	37·36	34·95	
19th "	7 "	37·31	34·90	
20th "	7 "	37·21	34·85	

Highest recorded level on 26-8-1879 64·24.
Lowest recorded level on 24-4-1931 32·05.

S. GUPTA, *Subdivisional Officer,*
Irrigation Department, Rajshahi.

Rampur Boalia, the 20th March 1937.

Printed and published by the Superintendent, Government Printing, Bengal Government Press, Alipore, Bengal, on the 1st April 1937.

Registered No. C207

The Calcutta Gazette

Extraordinary

Published by Authority

THURSDAY, APRIL 1, 1937.

Government of Bengal.

HOME DEPARTMENT.

Appointment.

NOTIFICATION.

No. 3410A.—1st April 1937.—Mr. G. P. Hogg, C.S.I., C.I.E., I.C.S., is appointed to be Chief Secretary to the Government of Bengal, and Secretary, Home Department.

S. BASU,
Dy. Secy. to the Govt. of Bengal.

HOME DEPARTMENT.

Constitution and Elections.

NOTIFICATION.

No. 8373A R.—1st April 1937.—The following is published for general information.

G. P. HOGG,
Secy. to the Govt. of Bengal.

INDIA.

LETTERS PATENT passed under the Great Seal of the Realm constituting the office of Governor of Bengal.

Dated 5th March 1937.

GEORGE THE SIXTH by the Grace of God of Great Britain, Ireland and of the British Dominions beyond the Seas King Defender of the Faith Emperor of India:

To all to whom these Presents shall come

GREETING:

WHEREAS by sections 46 and 48 of the Government of India Act, 1935, it is enacted that the Governor of Bengal is appointed by Us by a Commission under Our Sign Manual:

AND WHEREAS provision is made in section 304 of the said Act for the appointment by Us of persons to act as the Governor of a Province during the absence of the Governor from India:

AND WHEREAS We are minded to make provision for the office of Our Governor of Bengal:

NOW, THEREFORE, We do declare Our Will and Pleasure to be as follows:—

1. We do hereby constitute, order and declare that there shall be a Governor of Bengal.

2. One of Our Principal Secretaries of State may grant to Our Governor of Bengal once during his term of office leave of absence from India for urgent reasons of health or of private affairs. Such leave of absence shall not exceed four months in duration unless Our Secretary of State shall see fit to extend the period so granted, in which case he shall set forth the reasons for the extension in a minute to be signed by himself and laid before both Houses of Parliament.

3. And We do hereby require and command all Our officers, civil and military, and all other the inhabitants of Bengal to be aiding and assisting unto Our said Governor.

4. And We do hereby reserve to Ourselves, Our heirs and successors, full power and authority from time to time to revoke, alter or amend these Our Letters Patent as to Us or them shall seem meet.

IN WITNESS whereof We have caused these Our Letters to be made Patent. Witness Ourself at Westminster the Fifth day of March in the First year of Our Reign.

BY WARRANT UNDER THE KING'S SIGN MANUAL.

SCHUSTER.

HOME DEPARTMENT.

Constitution and Elections.

NOTIFICATION.

No. 8374A.R.—1st April 1937.—The following is published for general information.

G. P. HOGG,

Secy. to the Govt. of Bengal.

INDIA.

INSTRUCTIONS passed under the Royal Sign Manual and Signet to the Governor of Bengal.

Dated 8th March 1937.

GEORGE R. I.

INSTRUCTIONS to Our Governor for the time being of Bengal.

GIVEN at Our Court at Buckingham Palace the Eighth day of March 1937 in the First year of Our Reign.

WHEREAS by Letters Patent bearing date the Fifth day of March Nineteen hundred and thirty-seven We have made permanent provision for the Office of Governor of Bengal:

AND WHEREAS by those Letters Patent and by the Act of Parliament passed on the second day of August, Nineteen hundred and thirty-five and entitled the Government of India Act, 1935 (hereinafter called "the Act"), certain powers, functions and authority for the government of the Province of Bengal are declared to be vested in the Governor as Our Representative:

AND WHEREAS, without prejudice to the provision in the Act that in certain regards therein specified the Governor shall act according to instructions received from to time from Our Governor-General, and to the duty of Our Governor to give effect to instructions so received, We are minded to make general provision regarding the due manner in which Our said Governor shall execute all things which, according to the Act and the said Letters Patent, belong to his Office, and to the trust which We have reposed in him:

AND WHEREAS a draft of these Instructions has been laid before Parliament in accordance with the provisions of sub-section (1) of section fifty-three of the Act and an Address has been presented to Us by both Houses of Parliament praying that instructions may be issued in the terms of these Instructions:

NOW, THEREFORE, We do by these Our Instructions under Our Sign Manual and Signet declare Our pleasure to be as follows:—

A.—INTRODUCTORY.

I. Under these Our Instructions, unless the context otherwise require, the term "Governor" shall include every person for the time being acting as Governor according to the provisions of the Act.

II. Our Governor for the time being shall, with all due solemnity, cause Our Commission under Our Sign Manual appointing him to be read and published in the presence of the Chief Justice for the time being, or, in his absence, other Judge, of the High Court of the Province.

III. Our said Governor shall take the oath of allegiance and the oath for the due execution of the Office of Our Governor of Bengal, and for the due and impartial administration of justice, in the form hereto appended, which oaths the Chief Justice for the time being, or in his absence any Judge, of the High Court, shall, and he is hereby required to, tender and administer unto him.

IV. And We do authorise and require Our Governor, by himself or by any other person to be authorised by him in that behalf, to administer to every person appointed by him to hold office as a member of the Council of Ministers the oaths of office and of secrecy hereto appended.

V. And We do further direct that every person who under these Instructions shall be required to take an oath may make an affirmation in place of an oath if he has any objection to making an oath.

VI. And whereas great prejudice may happen to Our service by the absence of Our Governor, he shall not quit India during his term of office without having first obtained leave from Us under Our Sign Manual or through one of Our Principal Secretaries of State.

B.—IN REGARD TO THE EXECUTIVE AUTHORITY OF THE PROVINCE.

VII. In making appointments to his Council of Ministers Our Governor shall use his best endeavours to select his Ministers in the following manner, that is to say, to appoint in consultation with the person who in his judgment is most likely to command a stable majority in the Legislature those persons (including so far as practicable members of important minority communities) who will best be in a position collectively to command the confidence of the Legislature. In so acting, he shall bear constantly in mind the need for fostering a sense of joint responsibility among his Ministers.

VIII. In all matters within the scope of the executive authority of the Province, save in relation to functions which he is required by or under the Act to exercise in his discretion, Our Governor shall in the exercise of the powers conferred upon him be guided by the advice of his Ministers, unless in his opinion so to be guided would be inconsistent with the fulfilment of any of the special responsibilities which

are by the Act committed to him, or with the proper discharge of any of the functions which he is otherwise by or under the Act required to exercise in his individual judgment; in any of which cases Our Governor shall, notwithstanding his Ministers' advice, act in exercise of the powers by or under the Act conferred upon him in such manner as to his individual judgment seems requisite for the due discharge of the responsibilities and functions aforesaid. But he shall be studious so to exercise his powers as not to enable his Ministers to rely upon his special responsibilities in order to relieve themselves of responsibilities which are properly their own.

IX. Our Governor shall interpret his special responsibility for the safeguarding of the legitimate interests of minorities as requiring him to secure, in general, that those racial or religious communities for the members of which special representation is accorded in the Legislature, and those classes of the people committed to his charge who, whether on account of the smallness of their number or their primitive condition or their lack of educational or material advantages or from any other cause, cannot as yet fully rely for their welfare upon joint political action in the Legislature, shall not suffer, or have reasonable cause to fear, neglect or oppression. But he shall not regard as entitled to his protection any body of persons by reason only that they share a view on a particular question which has not found favour with the majority.

Further, Our Governor shall interpret the said special responsibility as requiring him to secure a due proportion of appointments in Our Services to the several communities, and, so far as there may be in his Province at the date of the issue of these Our Instructions an accepted policy in this regard, he shall be guided thereby, unless he is fully satisfied that modification of that policy is essential in the interests of the communities affected or of the welfare of the public.

X. In the discharge of his special responsibility for the securing to members of the public services of any rights provided for them by or under the Act and the safeguarding of their legitimate interests Our Governor shall be careful to safeguard the members of Our Services not only in any rights provided for them by or under the Act or any other law for the time being in force, but also against any action which, in his judgment, would be inequitable.

XI. The special responsibility of Our Governor for securing in the sphere of executive action any of the purposes which the provisions of Chapter III of Part V of the Act are designed to secure in relation to legislation shall be construed by him as requiring him to differ from his Ministers if in his individual judgment their advice would have effects of the kind which it is the purpose of the said Chapter to prevent, even though the advice so tendered to him is not in conflict with any specific provision of the Act.

XII. Our Governor shall construe his special responsibility for the protection of the rights of any Indian State as requiring him to see that no action shall be taken by his Ministers which would imperil the economic life of any State, or affect prejudicially any right of any State heretofore or hereafter recognised, whether derived from treaty, grant, usage, sufferance or otherwise: and he shall refer to Our Governor-General any questions which may arise as to the existence of any such right.

XIII. In the framing of rules for the regulation of the business of the Provincial Government Our Governor shall ensure that, amongst other provisions for the effective discharge of that business, due provision is made that the Finance Minister shall be consulted upon any proposal by any other Minister which affects the finances of the Province: and further that no reappropriation within a Grant shall be made by any Department other than the Finance Department, except in accordance with such rules as the Finance Minister may approve; and that in any case in which the Finance Minister does not concur in any such proposal the matter shall be brought for decision before the Council of Ministers. He shall further in those rules make due provision to secure that prompt attention is paid to any representation received by his Government from any minority.

XIV. Having regard to the powers conferred by the Act upon Our Secretary of State to appoint persons to Our service if, in his opinion, circumstances arise which render it necessary for him so to do in order to secure efficiency in irrigation, Our Governor shall make it his care to see that he is kept constantly supplied with information as to the conduct of irrigation in his Province in order that he may, if need be, place this information at the disposal of Our Governor-General.

XV. In the exercise of the powers by law conferred upon him in relation to the administration of areas declared under the Act to be Excluded or Partially Excluded Areas, or to the discharge of his special responsibility for the safeguarding of the legitimate interests of minorities, Our Governor shall, if he thinks this course would enable him the better to discharge his duties to the inhabitants of those areas or to primitive sections of the population elsewhere, appoint an officer with the duty of bringing their needs to his notice and advising him regarding measures for their welfare.

C.—Matters affecting the Legislature.

XVI. In determining whether he shall in Our name give his assent to, or withhold his assent from, any Bill Our Governor shall, without prejudice to the generality of his power to withhold his assent on any ground which appears to him in his discretion to render such action necessary or expedient, have particular regard to the bearing of the provisions of the Bill upon any of the special responsibilities imposed upon him by the Act.

XVII. Without prejudice to the generality of his powers as to reservation of Bills, Our Governor shall not assent in Our name to, but shall reserve for the consideration of Our Governor-General, any Bill of any of the classes herein specified, that is to say:—

(*a*) any Bill the provisions of which would repeal or be repugnant to the provisions of any Act of Parliament extending to British India;

(*b*) any Bill which in his opinion would, if it became law, so derogate from the powers of the High Court as to endanger the position which that Court is by the Act designed to fill;

(*c*) any Bill regarding which he feels doubt whether it does, or does not, offend against the purposes of Chapter III of Part V or section 299 of the Act;

(*d*) any Bill which would alter the character of the Permanent Settlement.

And in view of the provisions in this clause of these Our Instructions, it is Our will and pleasure that if his previous sanction is required under the Act to the introduction of any Bill of the last-mentioned description Our Governor shall not withhold that sanction to the introduction of the Bill.

XVIII. It is Our will that the power vested by the Act in Our Governor to stay proceedings upon a Bill, clause or amendment in the Provincial Legislature in the discharge of his special responsibility for the prevention of grave menace to peace and tranquillity shall not be exercised unless, in his judgment, the public discussion of the Bill, clause or amendment would itself endanger peace and tranquillity.

XIX. It is Our will and pleasure that the seats in the Legislative Council to be filled by the nomination of Our Governor shall be so apportioned as in general to redress, so far as may be, inequalities of representation which may have resulted from election, and in particular to secure representation for women and the Scheduled Castes in that Chamber.

D.—General.

XX. And generally Our Governor shall do all that in him lies to maintain standards of good administration; to promote all measures making for moral, social and economic welfare and tending to fit all classes of the population to take their due share in the public life and government of the Province; and to secure amongst all classes and creeds co-operation, goodwill and mutual respect for religious beliefs and sentiments; and he shall further have regard to this Instruction in the exercise of the powers by law conferred upon him in relation to matters whether of legislation or of executive government.

XXI. And We do hereby charge Our Governor to communicate these Our Instructions to his Ministers and to publish the same in his Province in such manner as he may think fit.

APPENDIX.

FORM OF OATH OF ALLEGIANCE.

I, , do swear that I will be faithful and bear true allegiance to His Majesty, King George the Sixth, Emperor of India, His Heirs and Successors, according to law.

So help me God.

FORM OF OATH OF OFFICE.

I, , do swear that I will well and truly serve Our Sovereign, King George the Sixth, Emperor of India, in the Office of , and that I will do right to all manner of people after the laws and usages of India, without fear or favour, affection or ill-will.

So help me God.

FORM OF OATH OF SECRECY FOR MINISTERS.

I, , do swear that I will not directly or indirectly communicate or reveal to any person or persons any matter which shall be brought under my consideration, or shall become known to me as a Minister in Bengal, except as may be required for the due discharge of my duties as such Minister or as may be specially permitted by the Governor in the case of any matter pertaining to the functions to be exercised by him in his discretion.

So help me God.

HOME DEPARTMENT.

NOTIFICATION.

No. 3449A.—1st April 1937.—In exercise of the power conferred by sub-section (*1*) of section 305 of the Government of India Act, 1935, the Governor is pleased to appoint Mr. L. G. Pinnell, I.C.S., to be Secretary to the Governor of Bengal.

G. P. HOGG,
Secy. to the Govt. of Bengal.

HOME DEPARTMENT.

NOTIFICATION.

No. 3447A.—1st April 1937.—In exercise of the power conferred by sub-section (*1*) of section 305 of the Government of India Act, 1935, the Governor is pleased to appoint Mr. R. J. Pringle, I.C.S., to be Assistant Secretary to the Governor of Bengal.

G. P. HOGG,
Secy. to the Govt. of Bengal.

HOME DEPARTMENT.

Constitution and Elections.

No. 8372A.R.—1st April 1937.—The following notification is published for general information:—

NOTIFICATION.

GOVERNMENT HOUSE,
CALCUTTA,
The 1st April 1937.

His Excellency the Governor has been pleased to appoint:—

(1) Mr. Abul Kasem Fazlul Huq,
(2) Mr. Nalini Ranjan Sarker,
(3) Khwaja Sir Nazimuddin, K.C.I.E.,
(4) Sir Bijoy Prasad Singh Roy, Kt.,
(5) Nawab Khwaja Habibullah Bahadur, of Dacca,
(6) Maharaja Srischandra Nandy, of Kasimbazar,
(7) Mr. Huseyn Shaheed Suhrawardy,
(8) Nawab Musharruff Hossain, Khan Bahadur,
(9) Mr. Syed Nausher Ali,
(10) Mr. Prasanna Deb Raikut,
(11) Mr. Mukunda Behary Mullick,

to be members of his Council of Ministers.

These gentlemen have this day in the forenoon taken the oaths of office accordingly.

By Command,

L. G. PINNELL,
Secy. to the Governor of Bengal.

G. P. HOGG,
Secy. to the Govt. of Bengal.

HOME DEPARTMENT.

Constitution and Elections.

No. 8371A.R.—1st April 1937.—The following notification is published for general information:—

NOTIFICATION.

GOVERNMENT HOUSE,
CALCUTTA,
The 1st April 1937.

His Excellency the Governor has been pleased to appoint—

(1) The Hon'ble Mr. Abul Kasem Fazlul Huq to be Minister in charge of the Education Department.
(2) The Hon'ble Mr. Nalini Ranjan Sarker to be Minister in charge of the Finance Department.
(3) The Hon'ble Khwaja Sir Nazimuddin, K.C.I.E., to be Minister in charge of the Home Department.
(4) The Hon'ble Sir Bijoy Prasad Singh Roy, Kt., to be Minister in charge of the Revenue Department.
(5) The Hon'ble Nawab Khwaja Habibullah Bahadur, of Dacca, to be Minister in charge of the Department of Agriculture and Industries.
(6) The Hon'ble Maharaja Srischandra Nandy, of Kasimbazar, to be Minister in charge of the Department of Communications and Works.
(7) The Hon'ble Mr. Huseyn Shaheed Suhrawardy to be Minister in charge of the Department of Commerce and Labour.
(8) The Hon'ble Nawab Musharruff Hossain, Khan Bahadur, to be Minister in charge of the Judicial and Legislative Departments.

(9) The Hon'ble Mr. Syed Nausher Ali to be Minister in charge of the Department of Public Health and Local Self-Government.
(10) The Hon'ble Mr. Prasanna Deb Raikut to be Minister in charge of the Forest and Excise Department.
(11) The Hon'ble Mr. Mukunda Behary Mullick to be Minister in charge of the Co-operative Credit and Rural Indebtedness Department.

By Command,

L. G. PINNELL,
Secy. to the Governor of Bengal.

G. P. HOGG,
Secy. to the Govt. of Bengal.

HOME DEPARTMENT.

Constitution and Elections.

NOTIFICATION.

No. 8386A.R.—1st April 1937.—In exercise of the power conferred by sub-section (3) of section 51 of the Government of India Act, 1935, the Governor is pleased to determine that, until the Provincial Legislature by Act determine the salaries of the Ministers, their salaries shall be as follows:—

(1) The Hon'ble Mr. Abul Kasem Fazlul Huq—Rs. 3,000 per mensem.
(2) The Hon'ble Mr. Nalini Ranjan Sarker—Rs. 2,500 per mensem.
(3) The Hon'ble Khwaja Sir Nazimuddin, K.C.I.E.—Rs. 2,500 per mensem.
(4) The Hon'ble Sir Bijoy Prasad Singh Roy, Kt.—Rs. 2,500 per mensem.
(5) The Hon'ble Nawab Khwaja Habibullah Bahadur, of Dacca—Rs. 2,500 per mensem.
(6) The Hon'ble Maharaja Srischandra Nandy, of Kasimbazar—Rs. 2,500 per mensem.
(7) The Hon'ble Mr. Huseyn Shaheed Suhrawardy—Rs. 2,500 per mensem.
(8) The Hon'ble Nawab Musharruff Hossain, Khan Bahadur—Rs. 2,000 per mensem.
(9) The Hon'ble Mr. Syed Nausher Ali—Rs. 2,000 per mensem.
(10) The Hon'ble Mr. Prasanna Deb Raikut—Rs. 2,000 per mensem.
(11) The Hon'ble Mr. Mukunda Behary Mullick—Rs. 2,000 per mensem.

G. P. HOGG,
Secy. to the Govt. of Bengal.

HOME DEPARTMENT.

Constitution and Elections.

NOTIFICATION.

No. 8375A.R.—1st April 1937.—In exercise of the power conferred by clause (*d*) of paragraph 14 of the Fifth Schedule to the Government of India Act, 1935, the Governor is pleased to choose the persons whose names and addresses are given below to fill seats in the Bengal Legislative Council to be filled by persons chosen by him:—

	Name.	Address.
1.	Begum Hamida, B.A. ...	Hamida Hall, Russa Road, Tollygunj post office, Calcutta.
2.	Mrs. D'Rozario ...	46-B, Wellesley Street, Calcutta.
3.	Mr. Krishna Chandra Roy Chowdhury.	44, Hindusthan Park, Ballygunge, Calcutta.
4.	Maulvi Latafat Hossain ...	Kankinarah, 24-Parganas.
5.	Dr. Arabinda Barua, M.A., Ph.D. (London).	1, Buddhist Temple Street, Calcutta.
6.	Mr. D. J. Cohen ...	11, Camac Street, Calcutta.

G. P. HOGG,
Secy. to the Govt. of Bengal.

HOME DEPARTMENT.

Appointment.

NOTIFICATION.

No. 3412A.—1st April 1937.—Mr. D. Gladding, C.I.E., I.C.S., is appointed to be Secretary to the Government of Bengal, Finance Department.

G. P. HOGG,

Secy. to the Govt. of Bengal.

HOME DEPARTMENT.

Appointment.

NOTIFICATION.

No. 3415A.—1st April 1937.—Mr. G. S. Dutt, I.C.S., is appointed to be Secretary to the Government of Bengal in the Department of Public Health and Local Self-Government.

G. P. HOGG,

Secy. to the Govt. of Bengal.

HOME DEPARTMENT.

Appointment.

NOTIFICATION.

No. 3418A.—1st April 1937.—Mr. H. S. E. Stevens, I.C.S., is appointed to be Secretary to the Government of Bengal in the Department of Agriculture and Industries.

G. P. HOGG,

Secy. to the Govt. of Bengal.

HOME DEPARTMENT.

Appointment.

NOTIFICATION.

No. 3421A.—1st April 1937.—Mr. Sudhindra Kumar Haldar, I.C.S., is appointed to be Secretary to the Government of Bengal in the Department of Communications and Works.

G. P. HOGG,

Secy. to the Govt. of Bengal.

HOME DEPARTMENT.

Appointment.

NOTIFICATION.

No. 3424A.—1st April 1937.—Mr. J. R. Blair, I.C.S., is appointed to act as Additional Secretary to the Government of Bengal, Home Department.

G. P. HOGG,

Secy. to the Govt. of Bengal.

HOME DEPARTMENT.

Appointment.

NOTIFICATION.

No. 3426A.—1st April 1937.—Mr. S. Basu, I.C.S., is appointed to be Deputy Secretary to the Government of Bengal, Home Department.

G. P. HOGG,
Secy. to the Govt. of Bengal.

HOME DEPARTMENT.

Appointment.

NOTIFICATION.

No. 3428A.—1st April 1937.—Rai Giris Chandra Sen Bahadur, Deputy Magistrate and Deputy Collector, is appointed, until further orders, as Deputy Secretary to the Government of Bengal in the Department of Public Health and Local Self-Government.

G. P. HOGG,
Secy. to the Govt. of Bengal.

HOME DEPARTMENT.

Appointment.

NOTIFICATION.

No. 3431A.—1st April 1937.—Rai Debendra Nath Bhattacharjea Bahadur, M.B.E., is appointed to be Deputy Secretary to the Government of Bengal, Finance Department.

G. P. HOGG,
Secy. to the Govt. of Bengal.

HOME DEPARTMENT.

Appointment.

NOTIFICATION.

No. 3434A.—1st April 1937.—Mr. A. Hughes, I.C.S., is appointed to act, until further orders, as Deputy Secretary to the Government of Bengal in the Department of Commerce and Labour.

G. P. HOGG,
Secy. to the Govt. of Bengal.

HOME DEPARTMENT.

Appointment.

NOTIFICATION.

No. 3437A.—1st April 1937.—Mr. A. Hughes, I.C.S., Deputy Secretary to the Government of Bengal in the Department of Commerce and Labour, is also appointed to act, until further orders, as Additional Deputy Secretary, Finance Department.

G. P. HOGG,
Secy. to the Govt. of Bengal.

HOME DEPARTMENT.

Appointment.

NOTIFICATION.

No. 3440A.—1st April 1937.—Mr. Jatindra Nath Talukdar, I.C.S., is appointed to act, until further orders, as Additional Deputy Secretary to the Government of Bengal, Home Department.

G. P. HOGG,
Secy. to the Govt. of Bengal.

HOME DEPARTMENT.

Appointment.

NOTIFICATION.

No. 3442A.—1st April 1937.—Mr. M. J. Carritt, I.C.S., is appointed to be Under Secretary to the Government of Bengal, Home Department.

G. P. HOGG,
Secy. to the Govt. of Bengal.

HOME DEPARTMENT.

Appointment.

NOTIFICATION.

No. 3444A.—1st April 1937.—Mr. N. M. Khan, I.C.S., is appointed to act, until further orders, as Under Secretary to the Government of Bengal, Finance Department.

G. P. HOGG,
Secy. to the Govt. of Bengal.

HOME DEPARTMENT.

Constitution and Elections.

NOTIFICATION.

No. 8354A.R.—1st April 1937.—In exercise of the powers conferred by section 241 of the Government of India Act, 1935, and of all other powers enabling him in this behalf, the Governor is pleased to make the following rules:—

1. (*1*) These rules may be called the Bengal Legislative Assembly Department Rules, 1937

(*2*) They shall come into force on the 1st April 1937.

2. In these rules—

(*a*) "Assembly" means the Bengal Legislative Assembly;
(*b*) "Speaker" means the Speaker of the Bengal Legislative Assembly.

3. The Assembly Department shall consist of—

(*1*) the Secretary and Assistant Secretary to the Assembly; and
(*2*) so many Superintendents, Reporters, Assistants, clerks, stenographers, and menials as shall from time to time be considered necessary by the Governor.

4. Subject to the ultimate authority of the Governor, the Speaker shall administer the Assembly Department.

5. The Secretary shall, subject to the approval of the Speaker, exercise full control over the clerical and menial staff of the Assembly Department and shall be responsible for the smooth working of the department.

6. The Speaker may delegate to the Secretary such of his powers and for such time as may be necessary. The Secretary similarly may delegate such of his powers for such time as he thinks proper to the Assistant Secretary.

7. The Secretary and Assistant Secretary to the Assembly shall be appointed by the Governor in consultation with the Bengal Public Service Commission:

Provided that it shall not be necessary to consult the Public Service Commission in the case of a temporary or officiating appointment to either of these posts.

8. The pay of the Secretary and Assistant Secretary to the Assembly shall be such as the Governor may direct.

9. It shall be competent for the Speaker after consultation with the Secretary to appoint members of the clerical establishment of the Assembly Department, the methods of recruitment being such as may from time to time be laid down for corresponding grades in the Secretariat.

10. The Speaker may select from the assistants' cadre of the Assembly Department one assistant to act as his Personal Assistant, who, together with the reporter or stenographer attached to the Speaker, shall be under the Speaker's direct control so long as they continue to be his Personal Assistant and reporter or stenographer respectively.

11. Members of the menial establishment shall be appointed by the Secretary.

12. No order involving any of the following punishments, namely:—

(*i*) formal censure,

(*ii*) withholding an increment or promotion including stoppage at an efficiency bar,

(*iii*) suspension,

(*iv*) removal, or

(*v*) dismissal,

shall be passed, in respect of the Secretary or Assistant Secretary, except by the Governor after consulting the Speaker and no such order shall be passed except after consulting the Bengal Public Service Commission.

13. The Secretary may, for good and sufficient reason,

(*1*) censure,

(*2*) withhold increments or promotion (including stoppage at an efficiency bar) or,

(*3*) reduce to a lower post or time-scale or to a lower stage in a time-scale,

(*4*) suspend, where such suspension is imposed not as a punishment but to facilitate the proper investigation of a case against the officer suspended,

any member of the clerical establishment:

Provided that an appeal shall lie to the Speaker against every such order.

14. The Speaker may, for good and sufficient reason,

(*1*) remove or

(*2*) dismiss

any member of the clerical establishment:

Provided that an appeal shall lie to the Governor against any such order and no such appeal shall be decided without consulting the Bengal Public Service Commission.

15. The Secretary may impose any of the punishments specified in rules 13 and 14 on any member of the menial establishment:

Provided that an appeal shall lie to the Speaker against any such order.

16. The grant of leave to the Secretary or Assistant Secretary shall require the sanction of the Speaker and the Governor. Subject to any direction the Speaker may give, it shall be competent for the Secretary to grant casual leave to members of the clerical and menial establishments. The sanction of the Speaker shall be required for the grant of leave other than casual leave. The grant of special disability leave shall require the sanction of the Governor.

17. In respect of all matters affecting the clerical and menial establishment of the Assembly Department, not otherwise provided for in these rules, the rules and orders applicable to persons of corresponding rank in the Secretariat shall apply.

18. In the case of a vacancy in the office of Speaker the Secretary shall, subject to any directions of the Governor, assume full responsibility for the affairs of the department, provided that any matters which would ordinarily require the approval of the Speaker and which can without detriment to the public interest be deferred until a Speaker has been chosen shall be so deferred.

19. Any person holding a post in the Bengal Legislative Council Department immediately prior to the 1st April 1937 shall be deemed to have been duly appointed in accordance with these rules to the corresponding post in the Assembly Department.

G. P. HOGG,

Secy. to the Govt. of Bengal.

HOME DEPARTMENT.

Constitution and Elections.

NOTIFICATION.

No. 8350 A.R.—1st April 1937.—The Bengal Legislative Council Rules in force immediately before the commencement of Part III of the Government of India Act, 1935, as modified and adapted for the purposes of the Bengal Legislative Assembly by the Governor in exercise of his powers under sub-section (3) of section 84 of the said Act are hereby published for general information :—

1. These rules may be called the Bengal Legislative Assembly Rules. Short title.

2. In these rules— Definitions.

"the Act" means the Government of India Act, 1935 ;

"Assembly" means the Bengal Legislative Assembly ;

"Chamber" means a Chamber of the Bengal Legislature ;

"Council" means the Bengal Legislative Council ;

"Finance Minister" means the Minister appointed by the Governor to perform the functions of the Finance Minister under the rules and standing orders ;

"Gazette" means the *Calcutta Gazette* ;

"member" means a member of the Assembly ;

"Minister" means a Member of the Council of Ministers, and includes any member to whom such Minister may delegate any function assigned to him under the rules or standing orders ;

"Secretary" means the Secretary to the Assembly, and includes any person for the time being performing the duties of the Secretary ;

"session" means the whole period, from the time when the Assembly meets to the time when it is prorogued ;

"standing order" means a standing order of the Assembly ;

Words and expressions used in the Act and not defined in these rules shall have the meanings assigned to them in the Act.

Temporary Chairman.

3. At the commencement of every session the Speaker shall nominate from amongst the members of the Assembly a panel of not more than four Chairmen any one of whom may preside over the Assembly in the absence of the Speaker and Deputy Speaker, when so requested by the Speaker, or in his absence, by the Deputy Speaker.

Members absent from meetings of the Assembly for sixty days.

4. (*1*) If a member finds at any time that he is unable to attend meetings of the Assembly for a period of sixty days, computed in the manner provided in the proviso to sub-section (*4*) of section 68 of the Act, he shall apply for permission to be so absent.

(*2*) Such application shall, as soon as possible after receipt, be considered by the Assembly in such manner as the Speaker may determine.

(*3*) The Secretary shall inform the member, as soon as possible, of the decision of the Assembly on his application.

(*4*) If a member is absent without permission, from all meetings of the Assembly for a period of sixty days or more, computed in the manner provided in the proviso to sub-section (*4*) of section 68 of the Act, any member may move that such member's seat be declared vacant.

(*5*) A member shall give three days' notice of such a motion and shall, with his notice, forward a complete statement of the dates on which the member whose seat is to be declared vacant was absent.

(*6*) No such motion shall be admitted for discussion if the Speaker is satisfied that the statement is inaccurate.

(*7*) If such motion is carried, the Secretary shall intimate the fact to the Governor.

(*8*) The Secretary shall keep a list showing the names of all members who are absent for sixty days or more, computed in the manner provided in the proviso to sub-section (*4*) of section 68 of the Act, from all meetings of the Assembly and such list shall be made available for inspection by members.

Election of Speaker by the Assembly.

5. (*1*) When owing to a vacancy in the office of the Speaker it is necessary to choose a member as Speaker the Governor shall fix a date for the holding of the election, and the Secretary shall send to every member notice of the date so fixed.

(*2*) At any time before 1 p.m. on the day preceding the date so fixed any member may nominate another member for election by delivering to the Secretary a nomination paper signed by himself as proposer and by a third member as seconder and stating—

(*a*) the name of the member nominated, and

(*b*) that the proposer has ascertained that such member is willing to serve as Speaker if elected.

(*3*) The person presiding shall read out to the Assembly the names of the members who have been duly nominated together with those of their proposers and seconders, and, if only one member has been so nominated, shall declare that member to be elected. If more than one member has been so nominated, the Assembly shall proceed to elect a Speaker by ballot.

(*4*) For the purposes of sub-rule (*3*), a member shall not be deemed to have been duly nominated or be entitled to vote if he and his proposer and seconder have not, before the reading out of the names by the person presiding, made the oath or affirmation as members of the Assembly.

(*5*) Where more than two candidates have been nominated and at the first ballot no candidate obtains more votes than the aggregate votes obtained by the other candidates, the candidate who has obtained the smallest number of votes shall be excluded from the election and balloting shall proceed, the candidate obtaining the smallest number of votes at each ballot being excluded from the election, until one candidate obtains more votes than the remaining candidate or than the aggregate votes of the remaining candidates, as the case may be.

(*6*) Where at any ballot any of three or more candidates obtain an equal number of votes and one of them has to be excluded from the election under sub-rule (*5*), the determination as between the candidates whose votes are equal of the candidate who is to be excluded shall be by drawing of lots.

Language of the Assembly.

6. If any member is unacquainted or not sufficiently acquainted with the English language he may address the Assembly in Bengali or Hindustani provided that the Speaker may call on any member to speak in any language in which he is known to be proficient.

Decision on points of order.

7. (*1*) The Speaker shall decide all points of order which may arise, and his decision shall be final.

(*2*) Any member may at any time submit a point of order for the decision of the Speaker, but in doing so shall confine himself to stating the point.

Irrelevance or repetition.

8. The Speaker, after having called the attention of the Assembly to the conduct of a member who persists in irrelevance or in tedious repetition either of his own arguments or of the arguments used by other members in debate, may direct him to discontinue his speech.

Power to order withdrawal of member.

9. (*1*) The Speaker shall preserve order and have all powers necessary for the purpose of enforcing his decisions on all points of order.

(2) He may direct any member whose conduct is in his opinion grossly disorderly to withdraw immediately from the Assembly, and any member so ordered to withdraw shall do so forthwith and shall absent himself during the remainder of the day's meeting. If any member is ordered to withdraw a second time in the same session, the Speaker may direct the member to absent himself from the meetings of the Assembly for any period not longer than the remainder of the session, and the member so directed shall absent himself accordingly. The member so directed to be absent shall not be deemed to be absent for the purposes of sub-section (4) of section 68 of the Act.

(3) The Speaker may in the case of grave disorder arising in the Assembly suspend any sitting for a time to be named by him.

Allotment of time for private members' business and precedence of business.

10. (1) The Governor, after considering the state of business of the Assembly shall allot so many days as may in his opinion be possible, compatibly with the public interests for private members' business and may allot different days for the disposal of different classes of such business; and on days so allotted for any particular class of business, business of that class shall have precedence. On other days no business other than Government business shall be transacted except with the consent of the Governor.

(2) Nothing in sub-rule (1) shall affect the provisions of rules 23 and 24.

Governor's power to give precedence to special business.

11. The Governor acting in his discretion may—

(a) at the commencement of a session of the Assembly, allot a day or days for business relating to any matter which, in the opinion of the Governor, affects the discharge of his functions in so far as he is required by or under the Act to act in his discretion or to exercise his individual judgment, and on such day or days such business shall have precedence ;

(b) at any time during a session, require that any business of the nature referred to in clause (a) shall be taken up on any day or days specified in such requisition, and on such day or days such business shall have precedence.

Disallowance of questions by the Speaker.

12. The Speaker may disallow any question or any part of a question, on the ground that it relates to a matter which is not primarily the concern of the Provincial Government and, if he does so, the question, or part of the question, shall not be placed on the list of business.

Certain questions not to be asked without the consent of the Governor.

13. (*1*) No question shall be asked, save with the consent of the Governor acting in his discretion, in regard to any of the following subjects, namely :—

(*i*) any matter connected with the relations between His Majesty or the Governor General and any foreign State or Prince ;

(*ii*) the personal conduct of the Ruler of any Indian State or of a member of the ruling family thereof ;

(*iii*) any matter arising out of or affecting the administration of an excluded area.

(*2*) No question shall be asked on any matter connected with any Indian State unless the Governor acting in his discretion—

(*i*) is satisfied that the matter affects the interests of the Provincial Government or of a British subject ordinarily resident in the Province, and

(*ii*) has given his consent to the question being asked.

(*3*) If the Speaker is of opinion that a question is or may be one which cannot be asked save with the consent of the Governor, he shall, as soon as may be after the receipt of the notice of the question, forward to the Governor a copy thereof and, unless the Governor (whose decision in the matter shall be final), decides in his discretion that the question may be put, it shall not be entered in the list of business.

(*4*) Notwithstanding the fact that the Speaker has made no reference under sub-rule (*3*), if the Governor acting in his discretion considers that any question or part of a question is one which cannot be asked without his consent, he may withhold his consent to the asking of the question and, on communication to the Speaker of his decision which shall be final, the question shall not be entered in the list of business or, if it has been so entered, the Speaker shall decline to allow the question to be put.

(*5*) The Speaker shall disallow any supplementary question if, in his opinion, it infringes the provisions of this rule.

Subject-matter of questions.

14. A question may be asked for the purpose of obtaining information on a matter of public concern within the special cognisance of the member to whom it is addressed.

Disallowance of questions by the Governor.

15. The Governor acting in his discretion may at any time before a question is asked inform the Speaker that he disallows the question or any part of the question on the ground that it affects the discharge by him of his functions in so far as he is required by or under the Act to act in his discretion or to exercise his individual judgment and if he does so the question or part of the question shall not be entered in the list of business or, if it has been so entered, the Speaker shall decline to allow the question to be put.

Questions regarding controversy with higher authorities.

16. In matters which are or have been the subject of controversy between the Governor General in Council or the Secretary of State and the Provincial Government, no question shall be asked, except as to matters of fact, and the answer shall be confined to a statement of facts.

Supplementary questions.

17. Any member may put a supplementary question for the purpose of further elucidating any matter of fact regarding which an answer has been given:

Provided that the Speaker shall disallow any supplementary question if, in his opinion, it infringes the rules as to the subject-matter of questions.

Restrictions on the making of certain motions.

18. The provisions of rules 40 and 42 shall, so far as may be, apply to all motions.

Publication of Bills.

19. The Governor may order the publication of any Bill (together with the Statement of Objects and Reasons accompanying it) in the Gazette, although no motion has been made for leave to introduce the Bill. In that case it shall not be necessary to move for leave to introduce the Bill, and, if the Bill is afterwards introduced, it shall not be necessary to publish it again.

Notice of motion for leave to introduce Bills.

20. (*1*) Any member other than a Minister, desiring to move for leave to introduce a Bill shall give notice of his intention, and shall, together with the notice, submit six copies of the Bill and of the full statement of Objects and Reasons.

(*2*) If notice is given of a motion to introduce a Bill which, in the opinion of the Speaker, cannot be introduced save with previous sanction, the Speaker shall as soon as may be after the receipt of the notice refer the Bill to the Governor and the motion shall not be placed on the list of business unless the Governor has indicated to the Speaker that the previous sanction required has been granted.

(*3*) If any question arises whether a Bill is or is not a Bill which cannot be introduced save with previous sanction, the question shall be referred to the authority which would have power to grant the previous sanction if it were necessary, and the decision of that authority on the question shall be final.

(*4*) The period of notice of a motion for leave to introduce a Bill under this rule shall be fifteen days.

Publication.

21. As soon as may be after a Bill has been introduced, the Bill, unless it has already been published, shall be published in the Gazette.

Persons by whom motions in respect of Bills may be made.

22. (*1*) Subject to the provisions of rule 34 no motion that a Bill be taken into consideration or be passed shall be made by any member other than the member in charge of the Bill and no motion that a Bill be referred to a select committee or be circulated or re-circulated for the purpose of eliciting opinion thereon shall be made by any member other than the member in charge except by way of amendment to a motion, made by the member in charge.

(*2*) For the purposes of this rule "member in charge of the Bill" means, in the case of a Government Bill, any member acting on behalf of the Government and, in any other case, the member who has introduced the Bill.

Discussion of Governor's Bills.

23. (*1*) Within one month after the receipt from the Governor of a message under clause (*b*) of sub-section (*1*) of section 90 of the Act, with a copy of the Bill considered by him to be necessary, any member may, after giving three days' notice to the Secretary, make a motion for an address to the Governor approving or disapproving the Bill and may attach to any such address a list of amendments to be made therein and such amendments shall be dealt with by the Assembly in the same manner as amendments to Bills.

(*2*) The Speaker shall forthwith communicate to the Governor the proceedings of the Assembly in relation to the Bill.

Discussion of Governor's ordinances.

24. As soon as possible after the Governor has promulgated an ordinance under sub-section (*1*) of section 88 of the Act, printed copies of such ordinance shall be made available to the members of the Assembly Within six weeks from the reassembly of the Assembly, any member may, after giving three clear days' notice to the Secretary, move a resolution disapproving the ordinance and if such a resolution is passed, it shall be forwarded to the Council with a message asking for its concurrence

Effect of certification by Governor.

25. A certificate by the Governor under sub-section (*2*) of section 86 of the Act in respect of any Bill or any clause of a Bill or any amendment to a Bill directing that no further proceedings shall be taken thereon may be made by message and shall be communicated to the Assembly by the Speaker On receipt of such a certificate, all notices of motions in connection with the subject-matter of the certificate shall lapse and if any such motion has not already been set down on the list of business, it shall not be so set down. If any such motion has been set down on the list of business, the Speaker shall, when the motion is reached, inform the Assembly of the Governor's certificate and the Assembly shall forthwith without debate proceed to the next item of business. If any such motion has been reached and is under discussion when the certificate is received, the Speaker shall fothwith inform the Assembly

of the Governor's certificate and the Assembly shall forthwith without further debate proceed to the next item of business.

Provisions regarding previous sanction for introduction of Bills to apply to amendments.

26. The provisions of sub-rules (*2*) and (*3*) of rule 20 shall apply *mutatis mutandis* to all amendments.

Bills originating in and passed by the Assembly.

27. Every Bill originating in the Assembly which has been passed by the Assembly shall be sent to the Council.

Bill returned to the Assembly after amendment by the Council.

28. If the Bill is returned to the Assembly after amendment by the Council, copies of the Bill shall be laid on the table at the next following meeting of the Assembly or as soon as possible thereafter.

Appointment of time for consideration of amendments.

29. After the amended Bill has been laid on the table any member acting on behalf of the Government in the case of a Government Bill or, in any other case, any member, after giving seven days' notice or, with the consent of the Speaker without notice, may move that the amendments be taken into consideration.

Procedure on consideration of amendments.

30. (*1*) If a motion that the amendments be taken into consideration is carried, the Speaker shall put the amendments to the Assembly in such manner as he thinks most convenient for their consideration.

(*2*) Further amendments relevant to the subject-matter of the amendments made by the Council may be moved, but no further amendment shall be moved to the Bill, unless it is consequential upon, or an alternative to, an amendment made by the Council.

Procedure consequent on consideration of amendments.

31. (*1*) If the Assembly agrees to the amendments made by the Council, a message intimating its agreement shall be sent to the Council.

(*2*) If the Assembly disagrees with the amendments made by the Council or any of them, the Bill with a message intimating its disagreement shall be sent to the Council.

(*3*) If the Assembly agrees to the amendments or any of them with further amendments or proposes further amendments in place of amendments made by the Council the Bill as further amended with a message to that effect shall be sent to the Council.

(*4*) If the Bill is thereafter returned with a message intimating that the Council insists on amendments to which the Assembly is unable to agree the Assembly may report the fact of the disagreement to the Governor.

32. When a Bill originating in the Council has been passed by the Council and is sent to the Assembly copies of the Bill shall be laid on the table at the next following meeting of the Assembly or as soon as possible thereafter.

Bills originating in and passed by the Council and sent to the Assembly.

33. At any time after copies have been laid on the table, any member acting on behalf of the Government in the case of a Government Bill or, in any other case, any member may give notice of his intention to move that the Bill be taken into consideration.

Notice.

34. On the day on which the motion is set down in the list of business which shall, unless the Speaker otherwise directs, be not less than seven days from the receipt of the notice the member giving notice may move that the Bill be taken into consideration.

Motion for consideration.

35. On the day on which such motion is made or any subsequent day to which the discussion is postponed the principle of the Bill and its general provisions may be discussed, but the details of the Bill must not be discussed further than is necessary to explain its principle.

Discussion.

36. Any member may (if the Bill has not already been referred to a select committee of the Council or to a joint committee of both Chambers, but not otherwise) move as an amendment that the Bill be referred to a select committee and, if such motion is carried, the Bill shall be referred to a select committee and the standing orders regarding select committees on Bills originating in the Assembly shall then apply.

Reference to select committee.

37. If the motion that the Bill be taken into consideration is carried, the Bill shall be taken into consideration and the provisions of the rules and standing orders of the Assembly regarding consideration of amendments to Bills and the subsequent procedure in regard to the passing of Bills shall apply.

Consideration and passing.

38. If the Bill is passed without amendment, the Bill with a message to the effect that the Assembly have agreed to the Bill without any amendments shall be sent to the Council.

Bills passed without amendments.

39. (*1*) If the Bill is passed with amendments, the Bill shall be returned with a message asking the concurrence of the Council to the amendments.

Bills passed with amendments.

(*2*) If the Bill is thereafter returned by the Council with a message that the Council agrees to the amendments or any of them with further amendments or proposes further amendments in place of amendments made by the Assembly, the provisions of rules 28 and 29 and sub-rule (*1*) of rule 30

shall apply and the Assembly may either agree to the Bill as originally passed in the Council or as further amended by the Council, as the case may be, or may return the Bill with a message that it insists on an amendment or amendments to which the Council has disagreed.

Power to disallow certain resolutions.

40. The Governor acting in his discretion may at any time before the resolution is moved inform the Speaker that he disallows any resolution or any part of a resolution on the ground that it relates to or affects the discharge of any of the functions of the Governor in so far as he is by or under the Act required to act in his discretion or exercise his individual judgment, and if he does so, the resolution or part of the resolution shall not be placed on the list of business or if it has been placed on the list of business, it shall not be moved.

Power to disallow other resolutions

41. The Governor may at any time before the resolution is moved disallow any resolution or any part of a resolution on the ground that it cannot be moved without detriment to the public interest or that it relates to a matter which is not primarily the concern of the Provincial Government and if he does so, the resolution or part of the resolution shall not be placed on the list of business or if it has been placed on the list of business, it shall not be moved.

Certain resolutions not to be moved without the consent of Governor.

42. (*1*) No resolution shall be moved, save with the consent of the Governor acting in his discretion, in regard to any of the following subjects, namely :—

(*i*) any matter connected with the relations between His Majesty or the Governor General and any foreign State or Prince ;

(*ii*) the personal conduct of the Ruler of any Indian State or of a member of the ruling family thereof ;

(*iii*) any matter arising out of or affecting the administration of an excluded area.

(*2*) No resolution shall be moved on any matter connected with any Indian State unless the Governor acting in his discretion—

(*i*) is satisfied that the matter affects the interests of the Provincial Government or of a British subject ordinarily resident in the Province, and

(*ii*) has given his consent to the resolution being moved.

(*3*) If the Speaker is of opinion that a resolution is or may be one which cannot be moved save with the consent of the Governor, he shall, as soon as may be after the receipt of the notice of the resolution, forward to the Governor a copy thereof and, unless the Governor (whose decision in the matter shall be final) decides in his discretion that the resolution may be moved, it shall not be entered in the list of business.

(4) Notwithstanding the fact that the Speaker has made no reference under sub-rule (3), if the Governor acting in his discretion considers that any resolution or part of a resolution is one which cannot be moved without his consent he may withhold his consent to the moving of the resolution and, on communication to the Speaker of his decision which shall be final, the resolution shall not be entered in the list of business or, if it has been so entered, the Speaker shall decline to allow the resolution to be moved.

Form of resolutions.

43. Every resolution shall be in the form of a declaration of opinion by the Assembly.

Copy to Government.

44. A copy of every resolution which has been passed by the Assembly shall be forwarded to the Provincial Government.

Special motion.

45. (1) Save in so far as is otherwise provided by the Act or by these rules no discussion of a matter of general public interest shall take place otherwise than on a resolution moved in accordance with the rules and standing orders except with the consent of the Speaker and of the Minister to whose department the motion relates.

(2) It shall not be permissible to the Speaker or to the minister concerned to give his consent to the moving of any motion which requires the consent of the Governor under rule 42 unless such consent has been obtained.

(3) The Governor may disallow any motion or part of a motion on the ground that it cannot be moved without detriment to the public interest or on the ground that it relates to a matter which is not primarily the concern of the Provincial Government, and if he does so the motion shall not be placed on the list of business.

Motions for adjournments.

46. (1) A motion for an adjournment of the business of the Assembly for the purpose of discussing a definite matter of urgent public importance may be made with the consent of the Speaker.

(2) The provisions of rules 41 and 42 shall, so far as may be, apply to all such motions.

Power to disallow on certain grounds.

47. The Governor may disallow any motion for an adjournment of the business of the Assembly on the ground that it cannot be moved without detriment to the public interest or that it relates to a matter which is not primarily the concern of the Provincial Government and, if he does so, the adjournment shall not be permitted by the Speaker and no further discussion of the motion shall take place.

Restrictions on power to make motion.

48. The right to move the adjournment of the Assembly for the purpose of discussing a definite matter of urgent public importance shall be subject to the following restrictions, namely :—

(*i*) not more than one such motion shall be made at the same sitting ;

(*ii*) not more than one matter can be discussed on the same motion, and the motion must be restricted to a specific matter of recent occurrence ;

(*iii*) the motion must not revive discussion on a matter which has been discussed in the same session ;

(*iv*) the motion must not anticipate a matter which has been previously appointed for consideration, or with reference to which a notice of motion has been previously given ; and

(*v*) the motion must not deal with a matter on which a resolution could not be moved.

Motion of non-confidence in Ministers.

49. (*1*) A motion expressing want of confidence in a Minister or a motion disapproving the policy of the Minister in a particular respect may be made with the consent of the Speaker and subject to the following restrictions, namely :

(*a*) leave to make the motion must be asked for after questions and before the list of business for the day is entered upon ,

(*b*) the member asking for leave must before the commencement of the sitting of the day leave with the Secretary a written notice of the motion which he proposes to make

(*2*) If the Speaker is of opinion that the motion is in order he shall read the motion to the Assembly and shall request those members who are in favour of leave being granted to rise in their places and if not less than eighty-two members rise accordingly, the Speaker shall intimate that leave is granted and that the motion will be taken on such day, not being more than ten days from the day on which leave is asked, as he may appoint. If less than eighty-two members rise the Speaker shall inform the member that he has not the leave of the Assembly

Resignation of Ministers.

50. (*1*) A member who has resigned the office of Minister may with consent of the Speaker make a personal statement in explanation of his resignation.

(2) Such statement shall be made after questions and before the list of business for the day is entered upon.

(3) On such statement no debate shall be allowed :

Provided that a Minister shall be entitled after the member has made his statement to make a statement pertinent thereto.

Resolution to remove Speaker from office.

51. Any resolution to remove the Speaker from office, of which the required notice of fourteen days has been received, shall be read to the Assembly by the Speaker. He shall then request those members who are in favour of leave being granted to move the resolution to rise in their places and if not less than eighty-two members rise accordingly the Speaker shall intimate that leave is granted. If less than eighty-two members rise, the Speaker shall inform the intending mover thereof that he has not the leave of the Assembly to move it.

Presentation of Budget.

52. The annual financial statement or the statement of the estimated receipts and expenditure of the Province in respect of every financial year (hereinafter referred to as "the Budget") shall be presented to the Assembly on such day in the preceding financial year as the Governor exercising his individual judgment may appoint :

Provided that the provisions of paragraph 5 of the Government of India (Commencement and Transitory Provisions) Order, 1936, shall apply as regards the Budget for the financial year 1937-38.

Demands for grants.

53. (1) A separate demand shall ordinarily be made in respect of the grant proposed for each department of the Government, provided that the Finance Minister may in his discretion include in one demand grants proposed for two or more departments, or make a demand in respect of expenditure, such as Famine Relief and Interest, which cannot readily be classified under particular departments.

(2) Each demand shall contain, first a statement of the total grant proposed, and then a statement of the detailed estimates under each grant, divided into items.

(3) Subject to these rules, the Budget shall be presented in such a form as the Finance Minister may consider best fitted for its consideration by the Assembly.

Stages of the Budget debate.

54. The Budget shall be dealt with by the Assembly in two stages, namely :—

(i) a general discussion ; and

(ii) the voting of demands for grants.

General discussion.

55. (*1*) On a day or days to be appointed by the Governor, exercising his individual judgment, subsequent to the day on which the Budget is presented and for such time as the Governor exercising his individual judgment may allot for this purpose, the Assembly shall be at liberty to discuss the Budget as a whole or any question of principle involved therein, but no motion shall be moved at this stage, nor shall the Budget be submitted to the vote of the Assembly.

(*2*) The Finance Minister shall have a general right of reply at the end of the discussion.

(*3*) The Speaker may, if he thinks fit, prescribe a time-limit for speeches.

Voting of demands.

56. (*1*) The voting of demands for grants shall take place on such days not exceeding fifteen as the Governor exercising his individual judgment may allot for the purpose.

(*2*) Of the days so allotted, not more than two days shall be taken up by the Assembly for the discussion of any one demand. As soon as the maximum limit of time for discussion is reached, the Speaker shall forthwith put every question necessary to dispose of the demand under discussion.

(*3*) On a day allotted under sub-rule (*1*) for the voting of demands for grants, no other business shall be taken up before 6-30 p.m. except with the consent of the Speaker :

Provided that nothing in this rule shall be deemed to prohibit the asking and answering of questions during the time allowed under the standing orders.

(*4*) On the last day of the days so allotted, at 6-30 p.m. the Speaker shall forthwith put every question necessary to dispose of all the outstanding matters in connection with the demands for grants, and the consideration thereof shall not be anticipated by any motion for adjournment or be interrupted in any manner whatsoever nor shall any dilatory motion be moved in regard thereto.

Further demands for grants.

57. On a day fixed by the Governor before the last of the days allotted by him for the moving of demands for grants further demands for grants may be moved :

Provided that—

(*i*) they are required for purposes which in the opinion of the Governor are of an emergent nature ;

(*ii*) they are for new matters which have not been included, in the original estimates of the year.

Such demands shall be classified according to the original demands for grants, the details being shown by sub-heads of appropriation and detailed account heads under each grant.

58. (*1*) No motion for appropriation can be made, except on the recommendation of the Governor communicated to the Assembly. Motions at this stage.

(*2*) Motions may be moved at this stage to omit or reduce any grant but not to increase or alter the destination of a grant.

59. (*1*) The Governor, exercising his individual judgment, may from time to time, allot a day for the presentation of a supplementary statement of expenditure. Supplementary demands.

(*2*) The Governor exercising his individual judgment shall allot one or more days not earlier than three days after the day allotted for such presentation, (*a*) for voting on the demands for supplementary grants, or (*b*) for discussion of the estimates of the expenditure charged on the revenues of the Province, other than estimates relating to expenditure referred to in paragraph (*a*) of sub-section (*3*) of section 78 of the Act, or (*c*) for both such voting and discussion as the case may be.

(*3*) At 6-30 p.m. on the day or the last of such days as the case may be allotted under sub-rule (*2*) all discussion shall terminate and the Speaker shall forthwith put every question necessary to dispose of all the outstanding matters in connection with the demands for supplementary grants.

(*4*) The consideration of the business referred to in sub-rule (*2*) shall not, on the day or days allotted therefore, be anticipated by any motion for adjournment or be interrupted in any manner whatsoever, nor shall any dilatory motion be moved in regard thereto.

60. If in respect of any financial year money has been spent on any service for which the vote of the Assembly is necessary in excess of the amount granted for that service and for that year, a demand for the excess amount shall be presented to the Assembly and shall be dealt with in the same way by the Assembly as if it were a demand for a grant. Excess grants.

61. The schedule of the authorised expenditure of the Province shall be laid before the Assembly in pursuance of sub-section (*2*) of section 80 of the Act on such day as the Governor exercising his individual judgment may appoint for the purpose. Schedule of authorised expenditure.

62. (*1*) A Committee on public accounts shall be constituted for the purpose of dealing with reports of the Auditor-General of India relating to the appropriation accounts of the Province and such other matters as the Finance Department may refer to the Committee. Constitution of committee on public accounts.

(2) The Committee on public accounts shall consist of nine members, including the Finance Minister who shall be a member *ex-officio*. They shall be elected by the Assembly from among its members according to the principle of proportional representation by means of the single transferable vote. The term of office of members of the Committee shall be one year but any member shall be eligible for re-election.

(3) Casual vacancies shall be filled as soon as possible after they occur in the manner prescribed in sub-rule (2) and any person elected to fill such a vacancy shall hold office for so long only as the person in whose place he is elected would have held office.

(4) The Chairman shall be elected by the Committee from among their members. In the case of an equality of votes on any matter the Chairman shall have a second or casting vote.

Functions of Committee on public accounts.

63. (1) In scrutinising the appropriation accounts of the Province and the report of the Auditor-General thereon, it shall be the duty of the Committee on Public Accounts to satisfy itself—

(a) that the moneys shown in the accounts as having been disbursed were legally available for and applicable to the service or purpose to which they have been applied or charged,

(b) that the expenditure conforms to the authority which governs it, and

(c) that every re-appropriation has been made in accordance with such rules as may be prescribed by the Governor acting in his discretion or by the Finance Department as the case may be.

(2) It shall also be a duty of the Committee on Public Accounts—

(a) to examine such trading, manufacturing and profit and loss accounts and balance sheets, as the Governor may have required to be prepared, and the Auditor-General's report thereon ;

(b) to consider the report of the Auditor-General in cases where the Governor may have required him to conduct an audit of any receipts or to examine the accounts of stores and stock.

Procedure to be followed in making rules.

64. The procedure to be followed by the Assembly in making rules under sub-section (1) of section 84 of the Act to regulate its procedure and the conduct of its business shall be such as may be adopted by motion made and carried in the Assembly.

65. An address from the Assembly to the Governor shall be presented through the Speaker after motion made and carried in the Assembly.

Address to the Governor.

66. The Home Department shall be the channel of communication between the Assembly and the Governor.

Channel of communication between Assembly and Governor.

67. A copy of every Bill introduced in the Assembly shall, immediately after its introduction, be forwarded by the Secretary to the Governor General for his information.

Copy of Bill to the Governor General.

68. (*1*) Whenever a private member of the Assembly gives notice of his intention to move for leave to introduce a Bill, the Secretary shall forthwith send two copies of the Bill and Statement of Objects and Reasons to the department to which the case belongs and to the Legislative Department.

Supply of copies of private members' Bills.

(*2*) The provisions of sub-rule (*1*) shall, as far as may be, apply to all amendments notice of which is given by private members of the Assembly in the case of a Bill.

By order of the Governor,

G. P. Hogg,

Secretary to the Government of Bengal.

HOME DEPARTMENT.

Constitution and Elections.

NOTIFICATION.

No. 8351A.R.—1st April 1937.—The Bengal Legislative Council Standing Orders in force immediately before the commencement of Part III of the Government of India Act, 1935, as modified and adapted for the purposes of the Bengal Legislative Assembly by the Governor in exercise of his powers under sub-section (3) of section 84 of the said Act are hereby published for general information :—

Short title.

1. These standing orders may be called the Bengal Legislative Assembly Standing Orders.

Definition.

2. In these standing orders—

"the Act" means the Government of India Act, 1935 ;

"Assembly" means the Bengal Legislative Assembly ;

"Chamber" means a Chamber of the Bengal Legislature ;

"Council" means the Bengal Legislative Council ;

"Finance Minister" means the Minister appointed by the Governor to perform the functions of the Finance Minister under the rules and standing orders ;

"member" means a member of the Assembly ;

"minister" means a Member of the Council of Ministers, and includes any member to whom such Minister may delegate any function assigned to him under the rules or standing orders ;

"motion" means a proposal made by a member for the consideration of the Assembly relating to any matter which may be discussed by the Assembly and includes an amendment ;

"rule" means a rule of the Assembly ;

"Secretary" means the Secretary to the Assembly, and includes any person for the time being performing the duties of the Secretary ;

"Select Committee" means a committee appointed by the Assembly to consider or take evidence upon any Bill, and to report their opinion for the information and assistance of the Assembly ;

"session" means the whole period, from the time when the Assembly meets to the time when it is prorogued ;

Words and expressions used in the Act and not defined in these standing orders shall have the meanings assigned to them in the Act.

Notification and summons for meeting.

3. Whenever it appears to the Governor acting in his discretion that the Assembly should meet—

(*a*) he shall cause a notification to be published in the local official Gazette, appointing the day, hour and place for a meeting of the Assembly, and

(*b*) the Secretary shall send to each member a summons to attend the meeting.

Sitting of the Assembly.

4. (*1*) Whilst in session, the Assembly shall meet at such hour as the Governor may appoint.

(*2*) Any meeting of the Assembly may be adjourned by the person presiding.

Election of Deputy Speaker.

5. (*1*) As soon as may be after the election of the Speaker, the Assembly shall elect one of its members to be a Deputy Speaker.

(*2*) Any member may nominate another member for election by delivering to the Secretary, before such time as the Governor may appoint, a nomination paper signed by himself as proposer and by a third member as seconder and stating—

(*a*) the name of the member nominated, and

(*b*) that the proposer has ascertained that such member is willing to serve as Deputy Speaker, if elected.

(*3*) The speaker shall read out to the Assembly the names of the members who have been duly nominated together with those of their proposers and seconders, and if only one member has been so nominated shall declare that member to be elected. If more than one member has been so nominated, the Assembly shall proceed to elect a Deputy Speaker by ballot.

(*4*) The provisions of sub-rules (*4*), (*5*) and (*6*) of rule 5 shall apply to such election.

(*5*) If a vacancy in the office of Deputy Speaker occurs during the life of an Assembly a fresh election shall be held in accordance with the procedure hereinbefore mentioned.

Members' places.

6. The members shall sit in such order as the Speaker may appoint.

Members to rise when speaking.

7. A member desiring to make any observations on any matter before the Assembly shall speak from his place, shall rise when he speaks, and shall address the Speaker. At any time if the Speaker rises, any member speaking shall immediately resume his seat.

Explanations.

8. When, for the purpose of explanation during discussion or for any other sufficient reason, any member has occasion to ask a question of another member on any matter then under the consideration of the Assembly, he shall ask the question through the Speaker.

Limitations on debate.

9. (*1*) The matter of every speech must be strictly relevant to the matter before the Assembly.

(*2*) A member while speaking must not—

(*i*) refer to any matter of fact on which a judicial decision is pending ;

(*ii*) make a personal charge against a member ;

(*iii*) use offensive expressions regarding the conduct of the Indian or any Provincial legislature ;

(*iv*) reflect upon the conduct of His Majesty the King or the Governor General or His Majesty's Representative for the exercise of the functions of the Crown in its relations with Indian States or any Governor or any court of justice ;

(*v*) utter treasonable, seditious or defamatory words ; and

(*vi*) use his right of speech for the purpose of wilfully obstructing the business of the Assembly.

Business left over from session.

10. (*1*) On the termination of a session all pending notices shall lapse and fresh notice must be given for the next session except in the case of a question which has not been answered. Such question shall, if the member intimates in writing not less than fifteen days before the commencement of the next session his desire to proceed with the question, be carried over for reply to the list of questions for the next session.

(*2*) On the termination of a session Bills which have been introduced shall be carried over to the pending list of business of the next session :

Provided that if the member in charge of a Bill makes no motion in regard to the same during two complete sessions, the Bill shall lapse, unless the Assembly on a motion by that member make a special order for the continuance of the Bill.

Arrangement of business.

11. (*1*) At times when Government business has precedence, the Governor may arrange that business in such order as he thinks fit.

(*2*) The relative precedence of notices of Bills and resolutions given by private members shall from time to time, be determined by ballot in such manner as the Speaker may direct. The order of priority as determined by the ballot shall, subject to the provisions of standing order 60 be final.

(3) On a day allotted for the disposal of private members' Bills, such Bills shall, provided that any notice required by the rules or standing orders has been given, have relative precedence in the following order :—

(a) Bills returned by the Governor with a message under section 75 or section 76 of the Act ;

(b) Bills originating in the Assembly which have been returned by the Council after amendment ;

(c) Bills originating in the Council which have been sent to the Assembly ;

(d) other Bills.

Bills of each of the above classes shall be arranged so as to give priority to those which are most advanced. The relative precedence of Bills which have reached the same stage shall be determined by ballot in such manner as the Speaker may direct.

List of business.

12. (1) A list of business for the day shall be prepared by the Secretary and shall be circulated to all members.

(2) No business not included in the list of business for the day shall be transacted at any meeting without the leave of the Speaker.

Business outstanding at end of day.

13. All business appointed for any day and not disposed of on that day shall stand over until the next day of the session available for business of the class to which it belongs.

Time for questions.

14. The first hour of every meeting shall be available for the asking and answering of questions.

Notice of questions.

15. A member who wishes to ask a question shall give fifteen days' notice of his intention and shall, together with the notice, submit a copy of the question he wishes to ask :

Provided that the Speaker may, with the consent of the Minister in charge of the Department to which the question pertains, allow a question to be put at shorter notice than fifteen days :

Provided also that no member shall, unless he has obtained the special permission of the Speaker, be permitted to send in notice of more than twelve questions during one session of the Assembly, exclusive of any question that may have been carried over for reply from a previous session.

Form and contents of questions.

16. In order that a question may be admissible, it must satisfy the following conditions, namely :—

(*i*) it must not bring in any name or statement not strictly necessary to make the question intelligible ;

(*ii*) if it contains a statement, the member asking it must make himself responsible for the accuracy of the statement ;

(*iii*) it must not contain arguments, inferences, ironical expressions or defamatory statements ;

(*iv*) it must not ask for expression of opinion or the solution of a hypothetical proposition ;

(*v*) it must not be asked as to the character or conduct of any person except in his official or public capacity ;

(*vi*) it must not be of excessive length ; and

(*vii*) it must not refer to any matter which is under adjudication by a court of law.

Speaker to decide admissibility of question.

17. The Speaker shall decide on the admissibility of a question with reference to the provisions of standing order 16 and shall disallow any question when, in his opinion, it is an abuse of the right of questioning, or is in contravention of those provisions.

List of questions and answers.

18. Subject to the provisions of rules 13 and 15 as soon as answers to questions which have not been disallowed are received by the Secretary they shall be entered in a list of questions and answers to be prepared for the next day of meeting, and the questions shall be put, if the time available for questions permits, in the order in which they stand in the list before any other business is entered upon at the meeting. Any questions left over owing to time not being available shall be postponed to the next day of meeting when they shall take precedence over other questions.

Matters to which they must relate.

19. A question addressed to a Minister must relate to the public affairs with which he is officially connected, or to a matter of administration for which he is responsible.

Questions how put.

20. Questions shall be put and answers given in such manner as the Speaker may, in his discretion, determine.

Answers to withdrawn questions.

21. The Speaker at the request of a Minister may direct that any answer to a question may be given on the ground of public interest even though the question is not put or the member in whose name it stands is absent.

22. The Minister to whom a supplementary question is put may, if he is not prepared to give an answer immediately, ask for notice of the question, in which case the supplementary question shall be treated as a fresh question to be answered at a subsequent meeting of the Assembly.

Minister may ask for notice of supplementary question.

23. No discussion shall be permitted in respect of any question or of any answer given to a question.

Prohibition of discussion.

24. (*1*) A matter requiring the decision of the Assembly is brought forward by means of a question put by the Speaker on a motion proposed by a member.

Motions.

(*2*) A member who wishes to move a motion (other than a motion for which a specified period is otherwise prescribed) shall give notice of his intention to the Secretary ten days before the meeting at which he intends to move the motion :

Provided that the Speaker may, in his discretion, admit at any time any motion at shorter notice than that prescribed by any order, or may admit a motion without notice.

(*3*) Votes may be taken by voices, by show of hands or by division, and shall be taken by division if any member so desires. The Speaker shall determine the method of taking votes by division.

(*4*) The result of a division shall be announced by the Speaker and shall not be challenged.

25. (*1*) Except as otherwise provided in the rules the Speaker shall decide on the admissibility of a motion.

Admissibility of motions.

(*2*) The Speaker may disallow any motion when in his opinion, it does not comply with the rules or standing orders.

26. A motion must not raise a question substantially identical with one on which the Assembly has given a decision in the same session.

Repetition of motions.

27. Where substantially identical motions stand in the names of two or more members, the Speaker shall decide whose motion shall be moved and the other motions shall thereupon be deemed to be withdrawn.

Identical motions.

28. (*1*) When any member has made a motion, other members may speak to it in such order as the Speaker may direct.

Order of speeches, right of reply and explanations ; time-limit of speeches.

(*2*) Except in the exercise of a right of reply or as otherwise provided, no member shall speak more than once to any motion, except with the permission of the Speaker for the purpose of making a personal explanation, but in that case no debatable matter may be brought forward.

(*3*) A member who has moved a substantive motion may speak again by way of reply, and if the motion is moved by a private member, the Minister to whose Department the matter relates shall have the right of speaking after the mover, whether he has previously spoken in the debate or not.

(*4*) Except with the permission of the Speaker no speech upon any motion shall exceed fifteen minutes in duration :

Provided that the mover of a motion, when moving the same, and the Minister in charge of the Department to which the motion relates, when speaking for the first time, may speak for thirty minutes.

Rules as to amendments.

29. (*1*) An amendment must be relevant to and within the scope of the question to which it is proposed.

(*2*) An amendment may not be moved which has merely the effect of a negative vote.

(*3*) After a decision has been given on an amendment to any part of a question, an earlier part shall not be amended.

(*4*) An amendment on a question must not be inconsistent with the previous decision on the same question given at the same stage of any Bill or motion.

(*5*) The Speaker may refuse to put an amendment which is in his opinion frivolous.

Order of amendments.

30. (*1*) When an amendment to any motion is moved, or when two or more such amendments are moved, the Speaker shall, before taking the sense of the Assembly thereon, state or read to the Assembly the terms of the original motion and of the amendment or amendments proposed.

(*2*) It shall be in the discretion of the Speaker to put first to the vote either the original motion or any of the amendments which may have been brought forward.

Division of motion.

31. When any motion involving several points has been discussed, it shall be in the discretion of the Speaker to divide the motion, and put each or any point separately to the vote as he may think fit.

Withdrawal of motions.

32. (*1*) A member who has moved a motion shall not withdraw the same, except by leave of the Assembly.

(*2*) No discussion shall be permitted on a request for leave to withdraw, except with the permission of the Speaker.

If the leave of the Assembly has been given to withdraw a motion to which an amendment has been proposed the mover of the amendment may forthwith move the motion in its amended form.

33. When any motion is under discussion, any member may move "that the question be now put," and unless it appears to the Speaker that the request is an abuse of the rules of the Assembly or an infringement of the rights of reasonable debate, the question "that the question be now put" shall be put forthwith. There shall be no debate on such motion. If such motion be carried the question shall be put accordingly. Closure.

34. (*1*) If a motion for leave to introduce a Bill is opposed, the Speaker after permitting, if he thinks fit, a brief explanatory statement from the member who moves and from the member who opposes the motion, may, without further debate, put the question thereon. Motion for leave to introduce a Bill.

(*2*) If such motion be carried, the Secretary shall read the title of the Bill, and the Bill shall thereupon be deemed to be introduced in the Assembly.

35. When a Bill is introduced, or on some subsequent occasion, the member in charge of the Bill may make one of the following motions in regard to the Bill, namely :— Motion after introduction.

(*a*) that it be taken into consideration by the Assembly either at once or at some future day to be then mentioned, or

(*b*) that it be referred to a select committee, or

(*c*) that it be circulated for the purpose of eliciting opinion thereon :

Provided that no such motion shall be made until after copies of the Bill have been made available for the use of members, and that any member may object to any such motion being made, unless copies of the Bill have been so available for seven days before the motion is made, and such objection shall prevail, unless the Speaker in exercise of his power to suspend this order allows the motion to be made.

36. (*1*) On the day on which any such motion is made, or on any subsequent day to which the discussion is postponed, the principle of the Bill and its general provisions may be discussed, but the details of the Bill must not be discussed further than is necessary to explain its principle. Discussion of Bills.

(*2*) At this stage no amendments to the Bill may be moved, but—

(*a*) if the member in charge moves that the Bill be taken into consideration, any member may move as an amendment that the Bill be referred to a select committee or be circulated for the purpose of eliciting opinion thereon before a date to be mentioned in the motion, or

(*b*) if the member in charge moves that the Bill be referred to a select committee, any member may move as an amendment that the Bill be circulated for the purpose of eliciting opinion.

(*3*) Where a motion that the Bill be circulated for the purpose of eliciting opinion is carried in the Assembly and the Bill is circulated in accordance with that direction, and opinions have been received thereon before the date mentioned in the motion, the member in charge, if he wishes to proceed with the Bill thereafter, must move that the Bill be referred to a select committee, unless the Speaker in the exercise of his power to suspend this order allows a motion to be made that the Bill be taken into consideration.

Select committee.

37. (*1*) The Minister in charge of the Department to which a Bill relates, the member who introduced the Bill and the other members of the select committee shall be named as members in the motion proposing the appointment of the committee.

(*2*) The Minister in charge of the Department to which a Bill relates shall, if he is a member of the Assembly, ordinarily be Chairman of the committee.

(*3*) If such Minister is not a member of the Assembly, the committee shall choose a member of the Committee to be their Chairman.

(*4*) In the case of an equality of votes, the Chairman shall have a second or casting vote.

(*5*) A select committee may hear expert evidence and representatives of special interests affected by the measure before them.

Proceedings of select committee to be treated as confidential.

38. All proceedings of a select committee shall be treated as confidential, and their recommendations shall not be disclosed until the report has been made available for the use of each member or has been published in the tocal official gazette.

Reports by select committee.

39. (*1*) When a Bill has been referred to a select committee, the Committee shall make a report thereon.

(*2*) Reports may be either preliminary or final.

(*3*) The select committee shall, in their report, state whether or not, in their judgment, the Bill has been so altered as to require re-publication, whether the publication directed by the rules or by the Assembly has taken place and the date on which the publication has taken place or, where publication in more than one language is ordered, the date on which the publication in each such language has taken place.

(4) If any member of a select committee desires to record a minute of dissent on any point, he must sign the majority report, stating that he does so subject to his dissent, and must at the same time hand in his minute.

(5) Every such minute of dissent must be confined to a discussion of matter contained in the report, and must be free from personal remarks.

Printing and publication of reports.

40. (1) The Secretary shall cause every report of a select committee to be printed, and a copy of the report shall be made available for the use of each member. The report, with the amended Bill, shall be published in the local official gazette.

(2) If any member is unacquainted with English, the Secretary shall also, if requested, cause the report to be translated for his use into such vernacular language as the Speaker may direct.

Presentation of report and procedure after presentation.

41. (1) Every report by a select committee on a Bill, shall be presented to the Assembly by the Chairman of the committee.

(2) In presenting a report the Chairman shall if he makes any remarks, confine himself to a brief statement of fact.

(3) After the presentation of the final report, the member in charge may move—

(i) that the Bill as reported by the select committee be taken into consideration, but any member may object to its being so taken into consideration if a copy of the report has not been available for the use of members for seven days, and such objection shall prevail, unless the Speaker in exercise of his power to suspend this order allows the report to be taken into consideration ; or

(ii) that the Bill be re-committed either—

(a) without limitation, or

(b) with respect to particular clauses or amendments only, or

(c) with instructions to the select committee to make some particular or additional provision in the Bill.

(4) If the member in charge moves that the Bill be taken into consideration, any member may move as an amendment that the Bill be re-committed.

Proposal of amendments.

42. When a motion has been agreed to by the Assembly that a Bill be taken into consideration, any member may propose an amendment of such Bill.

Notice of amendments.

43. (*1*) Any member who wishes to move an amendment to any Bill under the consideration of the Assembly shall send written notice thereof to the Secretary so as to reach him at least ten days before the first day on which the Bill is to be taken into consideration by the Assembly and shall, together with the notice send a copy of the amendment which he desires to move.

(*2*) The Secretary shall, if time permits, cause every notice of a proposed amendment to be printed, and a copy shall be made available for the use of each member.

(*3*) If any member present is unacquainted with English the Secretary, shall also, if requested, and if time permits cause every such notice to be translated into such vernacular language as the Speaker may direct.

Order of amendments.

44. Amendments shall ordinarily be considered in the order of the clauses of the Bill to which they respectively relate.

Submission of Bill clause by clause.

45. Notwithstanding anything in the foregoing orders, it shall be in the discretion of the Speaker when a motion that a Bill be taken into consideration has been carried, to submit the Bill, or any part of the Bill, to the Assembly clause by clause. When this procedure is adopted, the Speaker shall call each clause separately, and, when the amendments relating to it have been dealt with, shall put the question "that this clause, or (as the case may be) this clause as amended, stand part of the Bill."

Passing of Bills.

46. (*1*) If no amendment be made when a motion that a Bill be taken into consideration has been agreed to by the Assembly, the Bill may at once be passed.

(*2*) If any amendment be made, any member may object to the passing of the Bill at the same meeting ; and such objection shall prevail, unless the Speaker in exercise of his powers to suspend this standing order allows the motion that the Bill be passed to be made.

(*3*) Where the objection prevails, the Bill shall be brought forward again at a future meeting ; and may then be passed with or without further amendment.

Formal revision of Bill and submission of it to Speaker for authentication.

47. When a Bill is passed by the Assembly the Secretary shall, if necessary, renumber the clauses, revise and complete the marginal notes thereof and make such purely formal consequential amendments therein as may be required, and a copy of the Bill shall be submitted to the Speaker and shall be signed by him.

Assent to Bill and publication of Bill as Act.

48. When a Bill, which has originated in the Assembly, has been passed by both Chambers of the Provincial Legislature, it shall be signed by the Speaker and shall be submitted to the Governor for his assent, and, if assented to by him or by the Governor General or by His Majesty, it shall be published in the local official gazette as an Act of

the Bengal Legislature assented to by the Governor or the Governor General in the name of His Majesty or by His Majesty, as the case may be.

Reconsideration of Bills returned by the Governor.

49. (*1*) When a Bill which has been passed is returned by the Governor to the Assembly for reconsideration, the point or points referred for reconsideration or the amendments recommended shall be put before the Assembly by the Speaker and shall be discussed and voted upon in the same manner as amendments to a Bill or in such other way as the Speaker may consider most convenient for their consideration by the Assembly.

(*2*) An amendment may be moved at this stage notwithstanding that it raises a question substantially identical with one on which the Assembly has already given a decision in the same session.

(*3*) No amendments other than the amendments referred to the Assembly by the Governor shall be admissible at this stage.

Withdrawal of Bill.

50. The member in charge of a Bill may at any stage of the Bill move that the Bill be withdrawn, and, if such motion be carried, the Bill shall be withdrawn accordingly.

Communications as to Bills.

51. Communications on matters connected with any Bill before the Assembly must be addressed to the Secretary.

Circulation of communications.

52. The Secretary shall, if time permits, cause such communications to be printed, and send a copy to each member, and shall also refer them to the select committee sitting on any Bill to which they may relate.

Notice of resolutions.

53. A member who wishes to move a resolution shall give twenty-one days' notice of his intention, and shall, together with the notice, submit a copy of the resolution which he wishes to move :

Provided that the Speaker, with the consent of the Minister in charge of the Department concerned may allow a resolution to be entered on the list of business at shorter notice than twenty-one days :

Provided also that no member shall, unless he has obtained the special permission of the Speaker, be permitted to send in notice of more than three resolutions during one session of the Assembly.

Restrictions on the form and contents of resolution.

54. Subject to the restrictions contained in the rules and the provisions of the standing orders, any member may move a resolution relating to a matter of general public interest :

Provided that no resolution shall be admissible which does not comply with the following conditions, namely :—

(*a*) it shall be clearly and precisely expressed and shall raise a definite issue ;

(*b*) it shall not contain arguments, inferences, ironical expressions or defamatory statements, nor shall it refer to the conduct or character of persons except in their official or public capacity ; and

(*c*) it shall not refer to any matter which is under adjudication by a court of law.

Procedure on motion to withdraw.

55. (*1*) A member in whose name a resolution appears on the list of business shall, when called on, either—

(*a*) withdraw the resolution, in which case he shall confine himself to a mere statement to that effect, but may make such brief statement of his reasons for withdrawal as he may consider necessary ; or

(*b*) move the resolution, in which case he shall commence his speech by a formal motion in the terms appearing in the list of business.

(*2*) If the member when called on is absent, the resolution standing in his name shall be considered to have been withdrawn :

Provided that the Speaker in his discretion, may allow another member to move such resolution, or may postpone it.

Limits of discussion.

56. The discussion of a resolution shall be strictly limited to the subject of the resolution.

Amendments.

57. When a resolution is under discussion, any member may, subject to all the rules and orders relating to resolutions, move an amendment to such resolution.

Notice of amendment.

58. (*1*) If a copy of such amendment has not been sent to the Secretary seven days before the day fixed for the discussion of the resolution, any member may object to the moving of the amendment, and such objection shall prevail, unless the Speaker in exercise of his power to suspend this order allows the amendment to be moved.

(*2*) The Secretary shall, if time permits, cause every amendment to be printed, and send a copy for the information of each member.

Limitation of time of discussion of resolution.

59. (*1*) The Speaker may, if he thinks fit, allot the maximum limit of time which shall be available for the discussion of any resolution of a private member on any day allotted for the discussion of such resolutions.

(*2*) As soon as the maximum limit of time for discussion is reached, the Speaker shall forthwith put every question necessary to dispose of the resolution under discussion.

(*3*) Notwithstanding anything contained in sub-section (*4*) of standing order 28, the Speaker may, in the case of any resolution for the discussion of which he has allotted the maximum time under sub-section (*1*), proscribe a time-limit for speeches shorter than that referred to in that standing order.

Procedure for taking a resolution out of turn.

60. (*1*) Notwithstanding anything contained in sub-section (*2*) of standing order 11, on the written requisition of not less than ninety members that a resolution be taken out of its turn on a day allotted for the discussion of resolutions of private members the resolution shall, with the consent of the Speaker and the Minister in charge of the Department concerned, be given precedence on that day over all other resolutions for which a ballot has been held :

Provided that not more than one resolution shall be given such precedence in any one session of the Assembly.

(*2*) If more than one such requisition is received in respect of any one day, and the consent required by sub-section (*1*) is obtained thereto, a special ballot shall be held in such manner as the Speaker may direct to determine which of the resolutions specified in such requisitions shall be given precedence on that day.

(*3*) A resolution shall not have precedence under this standing order on any day unless the Minister concerned has received at least six days' notice, and the members at least twenty-four hours' notice, from the Secretary, that the resolution will be given precedence on that day :

Provided that, with the consent of the Speaker, six days' notice shall not be necessary if the Minister agrees to accept shorter notice.

Time of asking leave.

61. Leave to move a motion for the adjournment of the business of the Assembly for the purpose of discussing a definite matter of urgent public importance must be asked for after questions and before the list of business for the day is entered upon.

Method of asking leave.

62. The member asking leave must hand to the Speaker a written statement of the matter proposed to be discussed, and must annex thereto the consent of the Speaker in writing, to his motion.

Procedure to be followed.

63. If the Speaker is of opinion that the matter proposed to be discussed is in order, and if it has not been disallowed under the rules, the Speaker shall read the statement to the Assembly and ask whether the member has the leave of the Assembly. If no objection is taken, the Speaker shall intimate the hour at which the motion will be taken. If objection is taken, he shall request those members who support the motion to rise in their places, and, if not less than fifty members rise accordingly, he shall similarly intimate the hour If less than fifty members rise, the Speaker shall inform the member that he has not the leave of the Assembly.

Limitation of time of discussion.

64. (*1*) The debate on a motion to discuss a matter of urgent public importance if not earlier concluded shall automatically terminate at the end of two hours, and thereafter no question can be put.

(*2*) No speech during the debate shall exceed fifteen minutes in duration.

Discussion of Budget.

65. No discussion of the Budget shall take place on the day on which it is presented.

Giving of notice.

66. (*1*) Every notice required by the rules or standing orders shall be given in writing, addressed to the Secretary, and may be left at the Assembly office, which shall be open for this purpose between the hours of 11 and 3 o'clock on every day, except Sunday or a public holiday, or may be posted.

(*2*) Notices left, or delivered by post, when the office is closed shall be treated as given on the next open day.

Journal.

67. (*1*) The Secretary shall keep a journal, in which a short record of the proceedings of the Assembly for each day shall be fairly entered.

(*2*) The journal shall be submitted after each meeting to the Speaker for his confirmation and signature; and, when so signed, shall be the record of the proceedings of the Assembly.

Full report of proceedings.

68. (*1*) The Secretary shall also cause to be prepared a full report of the proceedings of the Assembly at each of its meetings, and publish it as soon as practicable.

(*2*) He shall send a copy of such report to each member of the Assembly and to the Governor and the Governor General.

69. The admission to the Assembly Chamber of— Admission of strangers.

(*1*) visitors to the visitors' gallery,

(*2*) representatives of the Press to the Press gallery, and

(*3*) officials

during the sittings of the Assembly shall be regulated in accordance with orders made by the Speaker with the previous sanction of the Governor:

Provided that until orders are made by the Speaker the orders regulating admission to the Chamber of the Bengal Legislative Council prior to the 1st April, 1937, shall, *mutatis mutandis*, be applicable and the functions of the Speaker thereunder shall, until the appointment of a member to act as Speaker, be exercised by the Minister in charge of the Home Department.

70. The Speaker whenever he thinks fit, may order the galleries to be cleared. Power to order withdrawal of strangers.

By order of the Governor,

G. P. HOGG,

Secretary to the Government of Bengal.

HOME DEPARTMENT.

Constitution and Elections.

NOTIFICATION.

No. 8352 A. R.—1st April, 1937.—The Bengal Legislative Council Rules in force immediately before the commencement of Part III of the Government of India Act, 1935, as modified and adapted for the purposes of the Bengal Legislative Council by the Governor in exercise of his powers under sub-section (*3*) of section 84 of the said Act are hereby published for general information :—

Short title.

1. These rules may be called the Bengal Legislative Council Rules.

Definitions.

2. In these rules—

" the Act " means the Government of India Act, 1935 ;

" Assembly " means the Bengal Legislative Assembly ;

" Chamber " means a Chamber of the Bengal Legislature ;

" Council " means the Bengal Legislative Council ;

" Finance Minister " means the Minister appointed by the Governor to perform the functions of the Finance Minister under the rules and standing orders ;

" Gazette " means the *Calcutta Gazette* ;

" member " means a member of the Council ;

" Minister " means a Member of the Council of Ministers, and includes any member to whom such Minister may delegate any function assigned to him under the rules or standing orders ;

"Secretary" means the Secretary to the Council, and includes any person for the time being performing the duties of the Secretary;

"session" means the whole period, from the time when the Council meets to the time when it is prorogued;

"standing order" means a standing order of the Council.

Words and expressions used in the Act and not defined in these Rules shall have the meanings assigned to them in the Act.

Temporary Chairman.

3. At the commencement of every session the President shall nominate from amongst the members of the Council a panel of not more than four Chairmen any one of whom may preside over the Council in the absence of the President and Deputy President, when so requested by the President, or in his absence, by the Deputy President.

Members absent from meetings of the Council for sixty days.

4. (*1*) If a member finds at any time that he is unable to attend meetings of the Council for a period of sixty days, computed in the manner provided in the proviso to sub-section (*4*) of section 68 of the Act, he shall apply for permission to be so absent.

(*2*) Such application shall, as soon as possible after receipt, be considered by the Council in such manner as the President may determine.

(*3*) The Secretary shall inform the member, as soon as possible, of the decision of the Council on his application.

(*4*) If a member is absent without permission, from all meetings of the Council for a period of sixty days or more, computed in the manner provided in the proviso to sub-section (*4*) of section 68 of the Act, any member may move that such member's seat be declared vacant.

(*5*) A member shall give three days' notice of such a motion and shall, with his notice, forward a complete statement of the dates on which the member whose seat is to be declared vacant was absent.

(*6*) No such motion shall be admitted for discussion if the President is satisfied that the statement is inaccurate.

(*7*) If such motion is carried, the Secretary shall intimate the fact to the Governor.

(*8*) The Secretary shall keep a list showing the names of all members who are absent for sixty days or more, computed in the manner provided in the proviso to sub-section (*4*) of section 68 of the Act, from all meetings of the Council and such list shall be made available for inspection by members.

Election of President by the Council.

5. (*1*) When owing to a vacancy in the office of the President it is necessary to choose a member as President the Governor shall fix a date for the holding of the election, and the Secretary shall send to every member notice of the date so fixed.

(*2*) At any time before 1 p.m. on the day preceding the date so fixed any member may nominate another member for election by delivering to the Secretary a nomination paper signed by himself as proposer and by a third member as seconder and stating—

(*a*) the name of the member nominated, and

(*b*) that the proposer has ascertained that such member is willing to serve as President if elected.

(*3*) The person presiding shall read out to the Council the names of the members who have been duly nominated together with those of their proposers and seconders, and, if only one member has been so nominated, shall declare that member to be elected. If more than one member has been so nominated, the Council shall proceed to elect a President by ballot.

(*4*) For the purposes of sub-rule (*3*), a member shall not be deemed to have been duly nominated or be entitled to vote if he and his proposer and seconder have not, before the reading out of the names by the person presiding, made the oath or affirmation as members of the Council.

(*5*) Where more than two candidates have been nominated and at the first ballot no candidate obtains more votes than the aggregate votes obtained by the other candidates, the candidate who has obtained the smallest number of votes shall be excluded from the election and balloting shall proceed, the candidate obtaining the smallest number of votes at each ballot being excluded from the election, until one candidate obtains more votes than the remaining candidate or than the aggregate votes of the remaining candidates, as the case may be.

(*6*) Where at any ballot any of three or more candidates obtain an equal number of votes and one of them has to be excluded from the election under sub-rule (*5*), the determination as between the candidates whose votes are equal of the candidate who is to be excluded shall be by drawing of lots.

Language of the Council.

6. If any member is unacquainted or not sufficiently acquainted with the English language he may address the Council in Bengali or Hindustani provided that the President may call on any member to speak in any language in which he is known to be proficient.

Decision on points of order.

7. (*1*) The President shall decide all points of order which may arise, and his decision shall be final.

(*2*) Any member may at any time submit a point of order for the decision of the President, but in doing so shall confine himself to stating the point.

Irrelevance or repetition.

8. The President, after having called the attention of the Council to the conduct of a member who persists in irrelevance or in tedious repetition either of his own arguments or of the arguments used by other members in debate, may direct him to discontinue his speech.

Power to order withdrawal of member.

9. (*1*) The President shall preserve order and have all powers necessary for the purpose of enforcing his decisions on all points of order.

(*2*) He may direct any member whose conduct is in his opinion grossly disorderly to withdraw immediately from the Council, and any member so ordered to withdraw shall do so forthwith and shall absent himself during the remainder of the day's meeting. If any member is ordered to withdraw a second time in the same session, the President may direct the member to absent himself from the meetings of the Council for any period not longer than the remainder of the session, and the member so directed shall absent himself accordingly. The member so directed to be absent shall not be deemed to be absent for the purposes of sub-section (*4*) of section 68 of the Act.

(*3*) The President may in the case of grave disorder arising in the Council suspend any sitting for a time to be named by him.

Allotment of times for private members business and precedence of business.

10. (*1*) The Governor, after considering the state of business of the Council, shall allot so many days as may in his opinion be possible, compatibly with the public interests for private members' business and may allot different days for the disposal of different classes of such business ; and on days so allotted for any particular class of business, business of that class shall have precedence. On other days no business other than Government business shall be transacted except with the consent of the Governor.

(*2*) Nothing in sub-rule (*1*) shall affect the provisions of rules 23 and 24.

Governor's power to give precedence to special business.

11. The Governor acting in his discretion may—

(*a*) at the commencement of a session of the Council, allot a day or days for business relating to any matter which, in the opinion of the Governor, affects the discharge of his functions in so far as he is required by or under the Act to act in his discretion or to exercise his individual judgment, and on such day or days such business shall have precedence ;

(*b*) at any time during a session, require that any business of the nature referred to in clause (*a*) shall be taken up on any day or days specified in such requisition, and on such day or days such business shall have precedence.

Disallowance of questions by the President.

12. The President may disallow any question or any part of a question, on the ground that it relates to a matter which is not primarily the concern of the Provincial Government and, if he does so, the question, or part of the question, shall not be placed on the list of business.

Certain questions not to be asked without the consent of the Governor.

13. (*1*) No question shall be asked, save with the consent of the Governor acting in his discretion, in regard to any of the following subjects, namely:—

(*i*) any matter connected with the relations between His Majesty or the Governor General and any foreign State or Prince ;

(*ii*) the personal conduct of the Ruler of any Indian State or of a member of the ruling family thereof ;

(*iii*) any matter arising out of or affecting the administration of an excluded area.

(*2*) No question shall be asked on any matter connected with any Indian State unless the Governor acting in his discretion—

(*i*) is satisfied that the matter affects the interest of the Provincial Government or of a British subject ordinarily resident in the Province, and

(*ii*) has given his consent to the question being asked.

(*3*) If the President is of opinion that a question is or may be one which cannot be asked save with the consent of the Governor, he shall, as soon as may be after the receipt of the notice of the question, forward to the Governor a copy thereof and, unless the Governor (whose decision in the matter shall be final) decides in his discretion that the question may be put, it shall not be entered in the list of business.

(*4*) Notwithstanding the fact that the President has made no reference under sub-rule (*3*), if the Governor acting in his discretion considers that any question or part of a question is one which cannot be asked without his consent, he may withhold his consent to the asking of the question and, on communication to the President of his decision which shall be final, the question shall not be entered in the list of business or, if it has been so entered, the President shall decline to allow the question to be put.

(*5*) The President shall disallow any supplementary question if, in his opinion, it infringes the provisions of this rule.

14. A question may be asked for the purpose of obtaining information on a matter of public concern within the special cognisance of the member to whom it is addressed.

Subject matter of questions.

15. The Governor acting in his discretion may at any time before a question is asked inform the President that he disallows the question or any part of the question on the ground that it affects the discharge by him of his functions in so far as he is required by or under the Act to act in his discretion or to exercise his individual judgment and if he does so, the question or part of the question shall not be entered in the list of business or, if it has been so entered, the President shall decline to allow the question to be put.

Disallowance of questions by the Governor.

16. In matters which are or have been the subject of controversy between the Governor General in Council or the Secretary of State and the Provincial Government, no question shall be asked, except as to matters of fact, and the answer shall be confined to a statement of facts.

Questions regarding controversy with higher authorities.

17. Any member may put a supplementary question for the purpose of further elucidating any matter of fact regarding which an answer has been given :

Supplementary questions.

Provided that the President shall disallow any supplementary question if, in his opinion, it infringes the rules as to the subject-matter of questions.

18. The provisions of rules 40 and 42 shall, so far as may be, apply to all motions.

Restrictions on the making of certain motions.

19. The Governor may order the publication of any Bill (together with the Statement of Objects and Reasons accompanying it) in the Gazette, although no motion has been made for leave to introduce the Bill. In that case it shall not be necessary to move for leave to introduce the Bill, and, if the Bill is afterwards introduced, it shall not be necessary to publish it again.

Publication of Bills.

20. (*1*) Any member other than a Minister, desiring to move for leave to introduce a Bill shall give notice of his intention, and shall, together with the notice, submit six copies of the Bill and of the full statement of Objects and Reasons.

Notice of motion for leave to introduce Bills.

(*2*) If notice is given of a motion to introduce a Bill which, in the opinion of the President, cannot be introduced save with previous sanction, the President shall as soon as may be after the receipt of the notice refer the Bill to the Governor and the motion shall not be placed on the list of business unless the Governor has indicated to the President that the previous sanction required has been granted.

(3) If any question arises whether a Bill is or is not a Bill which cannot be introduced save with previous sanction, the question shall be referred to the authority which would have power to grant the previous sanction if it were necessary, and the decision of that authority on the question shall be final.

(4) The period of notice of a motion for leave to introduce a Bill under this rule shall be fifteen days.

Publication.

21. As soon as may be after a Bill has been introduced, the Bill, unless it has already been published, shall be published in the Gazette.

Persons by whom motions in respect of Bills may be made.

22. (1) Subject to the provisions of rule 34 no motion that a Bill be taken into consideration or be passed shall be made by any member other than the member in charge of the Bill and no motion that a Bill be referred to a select committee or be circulated or recirculated for the purpose of eliciting opinion thereon shall be made by any member other than the member in charge except by way of amendment to a motion, made by the member in charge

(2) For the purposes of this rule "member in charge of the Bill" means, in the case of a Government Bill, any member acting on behalf of the Government and, in any other case, the member who has introduced the Bill.

Discussion of Governor's Bills.

23. (1) Within one month after the receipt from the Governor of a message under clause (b) of sub-section (1) of section 90 of the Act, with a copy of the Bill considered by him to be necessary, any member may, after giving three days' notice to the Secretary, make a motion for an address to the Governor approving or disapproving the Bill and may attach to any such address a list of amendments to be made therein, and such amendments shall be dealt with by the Council in the same manner as amendments to Bills.

(2) The President shall forthwith communicate to the Governor the proceedings of the Council in relation to the Bill.

Discussion of Governor's ordinances.

24. As soon as possible after the Governor has promulgated an ordinance under sub-section (1) of section 88 of the Act, printed copies of such ordinance shall be made available to the members of the Council Within six weeks from the reassembly of the Council, any member may, after giving three clear days' notice to the Secretary, move a resolution disapproving the ordinance and if such a resolution is passed, it shall be forwarded to the Assembly with a message asking for its concurrence.

Effect of certification by Governor.

25. A certificate by the Governor under sub-section (2) of section 86 of the Act in respect of any Bill or any clause of a Bill or any amendment to a Bill directing that no

further proceedings shall be taken thereon may be made by message and shall be communicated to the Council by the President. On receipt of such a certificate, all notices of motions in connection with the subject-matter of the certificate shall lapse and if any such motion has not already been set down on the list of business, it shall not be so set down. If any such motion has been set down on the list of business, the President shall, when the motion is reached, inform the Council of the Governor's certificate and the Council shall forthwith without debate proceed to the next item of business. If any such motion has been reached and is under discussion when the certificate is received, the President shall forthwith inform the Council of the Governor's certificate and the Council shall forthwith without further debate proceed to the next item of business.

Provisions regarding previous sanction for introduction of Bills to apply to amendments.

26. The provisions of sub-rules (*2*) and (*3*) of rule 20 shall apply *mutatis mutandis* to all amendments.

Bills originating in and passed by the Council.

27. Every Bill originating in the Council which has been passed by the Council shall be sent to the Assembly.

Bills returned to the Council after amendment by the Assembly.

28. If the Bill is returned to the Council after amendment by the Assembly, copies of the Bill shall be laid on the table at the next following meeting of the Council or as soon as possible thereafter.

Appointment of time for consideration of amendments.

29. After the amended Bill has been laid on the table any member acting on behalf of the Government in the case of a Government Bill or, in any other case, any member, after giving seven days' notice or, with the consent of the President without notice, may move that the amendments be taken into consideration.

Procedure on consideration of amendments.

30. (*1*) If a motion that the amendments be taken into consideration is carried, the President shall put the amendments to the Council in such manner as he thinks most convenient for their consideration.

(*2*) Further amendments relevant to the subject-matter of the amendments made by the Assembly may be moved, but no further amendment shall be moved to the Bill, unless it is consequential upon, or an alternative to, an amendment made by the Assembly.

Procedure consequent on consideration of amendments.

31. (*1*) If the Council agrees to the amendments made by the Assembly, a message intimating its agreement shall be sent to the Assembly.

(*2*) If the Council disagrees with the amendments made by the Assembly or any of them, the Bill with a message intimating its disagreement shall be sent to the Assembly.

(*3*) If the Council agrees to the amendments or any of them with further amendments or proposes further amendments in place of amendments made by the Assembly the Bill as further amended with a message to that effect shall be sent to the Assembly.

(*4*) If the Bill is thereafter returned with a message intimating that the Assembly insists on amendments to which the Council is unable to agree the Council may report the fact of the disagreement to the Governor.

Bills originating in and passed by the Assembly and sent to the Council.

32. When a Bill originating in the Assembly has been passed by the Assembly and is sent to the Council copies of the Bill shall be laid on the table at the next following meeting of the Council or as soon as possible thereafter.

Notice.

33. At any time after copies have been laid on the table, any member acting on behalf of the Government in the case of a Government Bill or, in any other case, any member may give notice of his intention to move that the Bill be taken into consideration.

Motion for consideration.

34. On the day on which the motion is set down in the list of business which shall, unless the President otherwise directs, be not less than seven days from the receipt of the notice the member giving notice may move that the Bill be taken into consideration.

Discussion.

35. On the day on which such motion is made or any subsequent day to which the discussion is postponed the principle of the Bill and its general provisions may be discussed, but the details of the Bill must not be discussed further than is necessary to explain its principle.

Reference to select committee.

36. Any member may (if the Bill has not already been referred to a select committee of the Assembly or to a joint committee of both Chambers, but not otherwise) move as an amendment that the Bill be referred to a select committee and, if such motion is carried, the Bill shall be referred to a select committee and the standing orders regarding select committees on Bills originating in the Council shall then apply.

Consideration and passing.

37. If the motion that the Bill be taken into consideration is carried, the Bill shall be taken into consideration and the provisions of the rules and standing orders of the Council regarding consideration of amendments to Bills and the subsequent procedure in regard to the passing of Bills shall apply.

38. If the Bill is passed without amendment, the Bill with a message to the effect that the Council have agreed to the Bill without any amendments shall be sent to the Assembly.

Bills passed without amendments.

39. (*1*) If the Bill is passed with amendments, the Bill shall be returned with a message asking the concurrence of the Assembly to the amendments.

Bills passed with amendments.

(*2*) If the Bill is thereafter returned by the Assembly with a message that the Assembly agrees to the amendments or any of them with further amendments or proposes further amendments in place of amendments made by the Council, the provisions of rules 28 and 29 and sub-rule (*1*) of rule 30 shall apply and the Council may either agree to the Bill as originally passed in the Assembly or as further amended by the Assembly, as the case may be, or may return the Bill with a message that it insists on an amendment or amendments to which the Assembly has disagreed.

40. The Governor acting in his discretion may at any time before the resolution is moved inform the President that he disallows any resolution or any part of a resolution on the ground that it relates to or affects the discharge of any of the functions of the Governor in so far as he is by or under the Act required to act in his discretion or exercise his individual judgment, and if he does so, the resolution or part of the resolution shall not be placed on the list of business or if it has been placed on the list of business, it shall not be moved.

Power to disallow other resolutions.

41. The Governor may at any time before the resolution is moved disallow any resolution or any part of a resolution on the ground that it cannot be moved without detriment to the public interest or that it relates to a matter which is not primarily the concern of the Provincial Government and if he does so, the resolution or part of the resolution shall not be placed on the list of business or if it has been placed on the list of business, it shall not be moved.

Power to disallow certain resolutions.

42. (*1*) No resolution shall be moved, save with the consent of the Governor acting in his discretion, in regard to any of the following subjects, namely :—

Certain resolutions not to be moved without the consent of Governor.

(*i*) any matter connected with the relations between His Majesty or the Governor General and any foreign State or Prince ;

(*ii*) the personal conduct of the Ruler of any Indian State or of a member of the ruling family thereof ;

(*iii*) any matter arising out of or affecting the administration of an excluded area.

(2) No resolution shall be moved on any matter connected with any Indian State unless the Governor acting in his discretion—

(i) is satisfied that the matter affects the interests of the Provincial Government or of a British subject ordinarily resident in the Province, and

(ii) has given his consent to the resolution being moved.

(3) If the President is of opinion that a resolution is or may be one which cannot be moved save with the consent of the Governor, he shall, as soon as may be after the receipt of the notice of the resolution, forward to the Governor a copy thereof and, unless the Governor (whose decision in the matter shall be final) decides in his discretion that the resolution may be moved, it shall not be entered in the list of business.

(4) Notwithstanding the fact that the President has made no reference under sub-rule (3), if the Governor acting in his discretion considers that any resolution or part of a resolution is one which cannot be moved without his consent he may withhold his consent to the moving of the resolution and, on communication to the President of his decision which shall be final, the resolution shall not be entered in the list of business or, if it has been so entered, the President shall decline to allow the resolution to be moved.

Form of resolutions.

43. Every resolution shall be in the form of a declaration of opinion by the Council.

Copy to Government.

44. A copy of every resolution which has been passed by the Council shall be forwarded to the Provincial Government.

Special motion.

45. (1) Save in so far as is otherwise provided by the Act or by these rules no discussion of a matter of general public interest shall take place otherwise than on a resolution moved in accordance with the rules and standing orders except with the consent of the President and of the Minister to whose department the motion relates.

(2) It shall not be permissible to the President or to the Minister concerned to give his consent to the moving of any motion which requires the consent of the Governor under rule 42 unless such consent has been obtained.

(3) The Governor may disallow any motion or part of a motion on the ground that it cannot be moved without detriment to the public interest or on the ground that it relates to a matter which is not primarily the concern of the Provincial Government, and if he does so the motion shall not be placed on the list of business.

46. (*1*) A motion for an adjournment of the business of the Council for the purpose of discussing a definite matter of urgent public importance may be made with the consent of the President. Motions for adjournments.

(*2*) The provisions of rules 41 and 42 shall, so far as may be, apply to all such motions.

47. The Governor may disallow any motion for an adjournment of the business of the Council on the ground that it cannot be moved without detriment to the public interest or that it relates to a matter which is not primarily the concern of the Provincial Government and, if he does so, the adjournment shall not be permitted by the President and no further discussion of the motion shall take place. Power to disallow on certain grounds.

48. The right to move the adjournment of the Council for the purpose of discussing a definite matter of urgent public importance shall be subject to the following restrictions, namely :— Restrictions on powers to make motion.

(*i*) not more than one such motion shall be made at the same sitting ;

(*ii*) not more than one matter can be discussed on the same motion, and the motion must be restricted to a specific matter of recent occurrence ;

(*iii*) the motion must not revive discussion on a matter which has been discussed in the same session ;

(*iv*) the motion must not anticipate a matter which has been previously appointed for consideration, or with reference to which a notice of motion has been previously given ; and

(*v*) the motion must not deal with a matter on which a resolution could not be moved.

49. (*1*) A motion expressing want of confidence in a Minister or a motion disapproving the policy of the Minister in a particular respect may be made with the consent of the President and subject to the following restrictions, namely :— Motion of non-confidence in Ministers.

(*a*) leave to make the motion must be asked for after questions and before the list of business for the day is entered upon ;

(*b*) the member asking for leave must before the commencement of the sitting of the day leave with the Secretary a written notice of the motion which he proposes to make.

(*2*) If the President is of opinion that the motion is in order he shall read the motion to the Council and shall request those members who are in favour of leave being granted to rise in their places and if not less than twenty-one members rise accordingly, the President shall intimate

that leave is granted and that the motion will be taken on such day, not being more than ten days from the day on which leave is asked, as he may appoint. If less than twenty-one members rise the President shall inform the member that he has not the leave of the Council.

Resignation of Ministers.

50. (*1*) A member who has resigned the office of Minister may with consent of the President make a personal statement in explanation of his resignation.

(*2*) Such statement shall be made after questions and before the list of business for the day is entered upon.

(*3*) On such statement no debate shall be allowed.

Provided that a Minister shall be entitled after the member has made his statement to make a statement pertinent thereto.

Resolution to remove President from office.

51. Any resolution to remove the President from office, of which the required notice of fourteen days has been received, shall be read to the Council by the President. He shall then request those members who are in favour of leave being granted to move the resolution to rise in their places and if not less than twenty-one members rise accordingly the President shall intimate that leave is granted. If less than twenty-one members rise, the President shall inform the intending mover thereof that he has not the leave of the Council to move it.

Presentation of Budget.

52. The annual financial statement or the statement of the estimated receipts and expenditure of the Province in respect of every financial year (hereinafter referred to as "the Budget") shall be presented to the Council on such day in the preceding financial year as the Governor exercising his individual judgment may appoint :

Provided that the provisions of paragraph 5 of the Government of India (Commencement and Transitory Provisions) Order, 1936, shall apply as regards the Budget for the financial year 1937-38.

General discussion.

53. (*1*) On a day or days to be appointed by the Governor, exercising his individual judgment, subsequent to the day on which the Budget is presented and for such time as the Governor exercising his individual judgment may allot for this purpose, the Council shall be at liberty to discuss the Budget as a whole or any question of principle involved therein.

(*2*) The Finance Minister shall have a general right of reply at the end of the discussion.

(*3*) The President may, if he thinks fit, prescribe a time-limit for speeches.

54. (*1*) The Governor, exercising his individual judgment, may from time to time, allot a day for the presentation of a supplementary statement of expenditure.

Supplementary statement of expenditure.

(*2*) The Governor, exercising his individual judgment, shall allot one or more days, subsequent to the day of presentation, for discussion of the estimates of expenditure other than estimates relating to expenditure referred to in paragraph (*a*) of sub-section (*3*) of section 78 of the Act.

55. The procedure to be followed by the Council in making rules under sub-section (*1*) of section 84 of the Act to regulate its procedure and the conduct of its business shall be such as may be adopted by motion made and carried in the Council.

Procedure to be followed in making rules.

56. An Address from the Council to the Governor shall be presented through the Speaker after motion made and carried in the Council.

Address to the Governor.

57. The Home Department shall be the channel of communication between the Council and the Governor.

Channel of communication between Council and Governor.

58. A copy of every Bill introduced in the Council shall, immediately after its introduction, be forwarded by the Secretary to the Governor General for his information.

Copy of Bill to the Governor General.

59. (*1*) Whenever a private member of the Council gives notice of his intention to move for leave to introduce a Bill, the Secretary shall forthwith send two copies of the Bill and Statement of Objects and Reasons to the department to which the case belongs and to the Legislative Department.

Supply of copies of private members' Bills.

(*2*) The provisions of sub-rule (*1*) shall, as far as may be, apply to all amendments notice of which is given by private members of the Council in the case of a Bill.

By order of the Governor,

G. P. HOGG,

Secretary to the Government of Bengal.

HOME DEPARTMENT.

Constitution and Elections.

NOTIFICATION.

No. 8353 A.R.—1st April, 1937.—The Bengal Legislative Council Standing Orders in force immediately before the commencement of Part III of the Government of India Act, 1935, as modified and adapted for the purposes of the Bengal Legislative Council by the Governor in exercise of his powers under sub-section (*3*) of section 84 of the said Act are hereby published for general information :—

Short title.

1. These standing orders may be called the Bengal Legislative Council Standing Orders.

Definitions.

2. In these standing orders—

" the Act " means the Government of India Act, 1935 ;

" Assembly " means the Bengal Legislative Assembly ;

" Chamber " means a Chamber of the Bengal Legislature ;

" Council " means the Bengal Legislative Council ;

" Finance Minister" means the Minister appointed by the Governor to perform the functions of the Finance Minister under the rules and standing orders ;

" member " means a member of the Council ;

" Minister " means a Member of the Council of Ministers and includes any member to whom such Minister may delegate any function assigned to him under the rules or standing orders ;

"motion " means a proposal made by a member for the consideration of the Council relating to any matter which may be discussed by the Council and includes an amendment ;

" rule " means a rule of the Council ;

" Secretary " means the Secretary to the Council and includes any person for the time being performing the duties of the Secretary ;

" Select Committee " means a Committee appoi ted by the Council, to consider or take evidence upon any Bill, and to report their opinion for the information and assistance of the Council ;

"session" means the whole period, from the time when the Council meets to the time when it is prorogued.

Words and expressions used in the Act and not defined in these standing orders shall have the meanings assigned to them in the Act.

Notification and summons for meeting.

3. Whenever it appears to the Governor acting in his discretion that the Council should meet—

(*a*) he shall cause a notification to be published in the local official Gazette, appointing the day, hour and place for a meeting of the Council, and

(*b*) the Secretary shall send to each member a summons to attend the meeting.

Sitting of the Council.

4. (*1*) Whilst in session, the Council shall meet at such hour as the Governor may appoint.

(*2*) Any meeting of the Council may be adjourned by the person presiding.

Election of Deputy President.

5. (*1*) As soon as may be after the election of the President, the Council shall elect one of its members to be a Deputy President.

(*2*) Any member may nominate another member for election by delivering to the Secretary, before such time as the Governor may appoint, a nomination paper signed by himself as proposer and by a third member as seconder and stating—

(*a*) the name of the member nominated, and

(*b*) that the proposer has ascertained that such member is willing to serve as Deputy President, if elected.

(*3*) The President shall read out to the Council the names of the members who have been duly nominated together with those of their proposers and seconders, and if only one member has been so nominated shall declare that member to be elected. If more than one member has been so nominated, the Council shall proceed to elect a Deputy President by ballot.

(*4*) The provisions of sub-rules (*4*), (*5*) and (*6*) of rule 5 shall apply to such election.

(*5*) If a vacancy in the office of Deputy President occurs a fresh election shall be held in accordance with the procedure hereinbefore mentioned.

Members' places.

6. The members shall sit in such order as the President may appoint.

Members to rise when speaking.

7. A member desiring to make any observations on any matter before the Council shall speak from his place, shall rise when he speaks, and shall address the President. At any time if the President rises, any member speaking shall immediately resume his seat.

Explanations.

8. When, for the purpose of explanation during discussion or for any other sufficient reason, any member has occasion to ask a question of another member on any matter then under the consideration of the Council he shall ask the question through the President.

Limitations on debate.

9. (*1*) The matter of every speech must be strictly relevant to the matter before the Council.

(*2*) A member while speaking must not—

(*i*) refer to any matter of fact on which a judicial decision is pending ;

(*ii*) make a personal charge against a member ;

(*iii*) use offensive expressions regarding the conduct of the Indian or any Provincial legislature ;

(*iv*) reflect upon the conduct of His Majesty the King or the Governor General or His Majesty's Representative for the exercise of the functions of the Crown in its relations with Indian States or any Governor or any Court of Justice ;

(*v*) utter treasonable, seditious or defamatory words ; and

(*vi*) use his right of speech for the purpose of wilfully obstructing the business of the Council.

Business left over from session

10. (*1*) On the termination of a session all pending notices shall lapse and fresh notice must be given for the next session except in the case of a question which has not been answered. Such question shall, if the member intimates in writing not less than fifteen days before the commencement of the next session his desire to proceed with the question, be carried over for reply to the list of questions for the next session.

(*2*) On the termination of a session Bills which have been introduced shall be carried over to the pending list of business of the next session :

Provided that if the member in charge of a Bill makes no motion in regard to the same during two complete sessions, the Bill shall lapse, unless the Council on a motion by that member make a special order for the continuance of the Bill.

WEST BENGAL STATE LIBRARY

11. (*1*) At times when Government business has precedence, the Governor may arrange that business in such order as he thinks fit. **Arrangement of business.**

(*2*) The relative precedence of notices of Bills and resolutions given by private members shall, from time to time, be determined by ballot in such manner as the President may direct. The order of priority as determined by the ballot shall, subject to the provisions of standing order 60 be final.

(*3*) On a day allotted for the disposal of private members' Bills, such Bills shall, provided that any notice required by the rules or standing orders has been given, have relative precedence in the following order :—

(*a*) Bills returned by the Governor with a message under section 75 or 76 of the Act ;

(*b*) Bills originating in the Council which have been returned by the Assembly after amendment ;

(*c*) Bills originating in the Assembly which have been sent to the Council ;

(*d*) other Bills.

Bills of each of the above classes shall be arranged so as to give priority to those which are most advanced. The relative precedence of Bills which have reached the same stage shall be determined by ballot in such manner as the President may direct.

12. (*1*) A list of business for the day shall be prepared by the Secretary and shall be circulated to all members. **List of business.**

(*2*) No business not included in the list of business for the day shall be transacted at any meeting without the leave of the President

13. All business appointed for any day and not disposed of on that day shall stand over until the next day of the session available for business of the class to which it belongs. **Business outstanding at end of day.**

14. The first hour of every meeting shall be available for the asking and answering of questions. **Time for questions.**

15. A member who wishes to ask a question shall give fifteen days' notice of his intention and shall, together with the notice, submit a copy of the question he wishes to ask : **Notice of questions.**

Provided that the President may, with the consent of the Minister in charge of the Department to which the question pertains, allow a question to be put at shorter notice than fifteen days :

Provided also that no member shall, unless he has obtained the special permission of the President, be permitted to send in notice of more than twelve questions during one session of the Council, exclusive of any question that may have been carried over for reply from a previous session.

Form and contents of questions.

16. In order that a question may be admissible, it must satisfy the following conditions, namely :—

(*i*) it must not bring in any name or statement not strictly necessary to make the question intelligible ;

(*ii*) if it contains a statement, the member asking it must make himself responsible for the accuracy of the statement ;

(*iii*) it must not contain arguments, inferences, ironical expressions or defamatory statements ;

(*iv*) it must not ask for expression of opinion or the solution of a hypothetical proposition ;

(*v*) it must not be asked as to the character or conduct of any person except in his official or public capacity ;

(*vi*) it must not be of excessive length ; and

(*vii*) it must not refer to any matter which is under adjudication by a court of law.

President to decide admissibility of question.

17. The President shall decide on the admissibility of a question with reference to the provisions of standing order 16 and shall disallow any question when, in his opinion, it is an abuse of the right of questioning, or is in contravention of those provisions.

List of questions and answers.

18. Subject to the provisions of rules 13 and 15 as soon as answers to questions which have not been disallowed are received by the Secretary they shall be entered in a list of questions and answers to be prepared for the next day of meeting, and the questions shall be put, if the time available for questions permits, in the order in which they stand in the list before any other business is entered upon at the meeting. Any questions left over owing to time not being available shall be postponed to the next day of meeting when they shall take precedence over other questions.

Matters to which they must relate.

19. A question addressed to a Minister must relate to the public affairs with which he is officially connected, or to a matter of administration for which he is responsible.

Questions how put.

20. Questions shall be put and answers given in such manner as the President may, in his discretion, determine.

Answers to withdrawn questions.

21. The President at the request of a Minister may direct that any answer to a question may be given on the ground of public interest even though the question is not put or the member in whose name it stands is absent.

Minister may ask for notice of supplementary question.

22. The Minister to whom a supplementary question is put may, if he is not prepared to give an answer immediately, ask for notice of the question, in which case the supplementary question shall be treated as a fresh question to be answered at a subsequent meeting of the Council.

Prohibition of discussion.

23. No discussion shall be permitted in respect of any question or of any answer given to a question.

Motions.

24. (*1*) A matter requiring the decision of the Council is brought forward by means of a question put by the President on a motion proposed by a member.

(*2*) A member who wishes to move a motion (other than a motion for which a specified period is otherwise prescribed) shall give notice of his intention to the Secretary ten days before the meeting at which he intends to move the motion :

Provided that the President may, in his discretion, admit at any time any motion at shorter notice than that prescribed by any order, or may admit a motion without notice.

(*3*) Votes may be taken by voices, by show of hands or by division, and shall be taken by division if any member so desires. The President shall determine the method of taking votes by division.

(*4*) The result of a division shall be announced by the Speaker and shall not be challenged.

Admissibility of motions.

25. (*1*) Except as otherwise provided in the rules the President shall decide on the admissibility of a motion.

(*2*) The President may disallow any motion when in his opinion, it does not comply with the rules or standing orders.

Repetition of motions.

26. A motion must not raise a question substantially identical with one on which the Council has given a decision in the same session.

Identical motions.

27. Where substantially identical motions stand in the names of two or more members, the President shall decide whose motion shall be moved and the other motions shall thereupon be deemed to be withdrawn.

Order of speeches, right of reply and explanations; time-limit of speeches.

28. (*1*) When any member has made a motion, other members may speak to it in such order as the President may direct.

(*2*) Except in the exercise of a right of reply or as otherwise provided, no member shall speak more than once to any motion, except with the permission of the President for the purpose of making a personal explanation, but in that case no debateable matter may be brought forward.

(*3*) A member who has moved a substantive motion may speak again by way of reply, and if the motion is moved by a private member, the Minister to whose Department the matter relates shall have the right of speaking after the mover, whether he has previously spoken in the debate or not.

(*4*) Except with the permission of the President no speech upon any motion shall exceed fifteen minutes in duration :

Provided that the mover of a motion, when moving the same, and the Minister in charge of the Department to which the motion relates, when speaking for the first time, may speak for thirty minutes.

Rules as to amendments.

29. (*1*) An amendment must be relevant to and within the scope of the question to which it is proposed.

(*2*) An amendment may not be moved which has merely the effect of a negative vote.

(*3*) After a decision has been given on an amendment to any part of a question, an earlier part shall not be amended.

(*4*) An amendment on a question must not be inconsistent with the previous decision on the same question given at the same stage of any Bill or motion.

(*5*) The President may refuse to put an amendment which is in his opinion frivolous.

Order of amendments.

30. (*1*) When an amendment to any motion is moved, or when two or more such amendments are moved, the President shall, before taking the sense of the Council thereon, state or read to the Council the terms of the original motion and of the amendment or amendments proposed.

(*2*) It shall be in the discretion of the President to put first to the vote either the original motion or any of the amendments which may have been brought forward.

Division of motion.

31. When any motion involving several points has been discussed, it shall be in the discretion of the President to divide the motion, and put each or any point separately to the vote as he may think fit.

Withdrawal of motions.

32. (*1*) A member who has moved a motion shall not withdraw the same, except by leave of the Council.

(*2*) No discussion shall be permitted on a request for leave to withdraw, except with the permission of the President.

If the leave of the Council has been given to withdraw a motion to which an amendment has been proposed the mover of the amendment may forthwith move the motion in its amended form.

Closure.

33. When any motion is under discussion any member may move "that the question be now put," and unless it appears to the President that the request is an abuse of the rules of the Council or an infringement of the rights of reasonable debate, the question "that the question be now put" shall be put forthwith. There shall be no debate on such motion. If such motion be carried the question shall be put accordingly.

Motion for leave to introduce a Bill.

34. (*1*) If a motion for leave to introduce a Bill is opposed, the President after permitting, if he thinks fit, a brief explanatory statement from the member who moves and from the member who opposes the motion, may, without further debate, put the question thereon.

(*2*) If such motion be carried, the Secretary shall read the title of the Bill, and the Bill shall thereupon be deemed to be introduced in the Council.

Motion after introduction.

35. When a Bill is introduced, or on some subsequent occasion, the member in charge of the Bill may make one of the following motions in regard to the Bill, namely :—

(*a*) that it be taken into consideration by the Council either at once or at some future day to be then mentioned, or

(*b*) that it be referred to a select committee, or

(*c*) that it be circulated for the purpose of eliciting opinion thereon :

Provided that no such motion shall be made until after copies of the Bill have been made available for the use of members, and that any member may object to any such motion being made, unless copies of the Bill have been so available for seven days before the motion is made, and such objection shall prevail, unless the President in exercise of his power to suspend this order allows the motion to be made.

Discussion of Bills.

36. (*1*) On the day on which any such motion is made or on any subsequent day to which the discussion is postponed, the principle of the Bill and its general provisions may be discussed, but the details of the Bill must not be discussed further than is necessary to explain its principle.

(2) At this stage no amendments to the Bill may be moved, but—

(a) if the member in charge moves that the Bill be taken into consideration, any member may move as an amendment that the Bill be referred to a select committee or be circulated for the purpose of eliciting opinion thereon before a date to be mentioned in the motion, or

(b) if the member in charge moves that the Bill be referred to a select committee, any member may move as an amendment that the Bill be circulated for the purpose of eliciting opinion.

(3) Where a motion that the Bill be circulated for the purpose of eliciting opinion is carried in the Council and the Bill is circulated in accordance with that direction, and opinions have been received thereon before the date mentioned in the motion, the member in charge, if he wishes to proceed with the Bill thereafter, must move that the Bill be referred to a select committee, unless the President in the exercise of his power to suspend this order allows a motion to be made that the Bill be taken into consideration.

Select committee.

37. (1) The Minister in charge of the Department to which a Bill relates, the member who introduced the Bill and the other members of the select committee shall be named as members in the motion proposing the appointment of the committee.

(2) The Minister in charge of the Department to which a Bill relates shall, if he is a member of the Council, ordinarily be Chairman of the committee.

(3) If such Minister is not a member of the Council, the committee shall choose a member of the Committee to be their Chairman.

(4) In the case of an equality of votes, the Chairman shall have a second or casting vote.

(5) A select committee may hear expert evidence and representatives of special interests affected by the measure before them.

Proceedings of select committee to be treated as confidential.

38. All proceedings of a select committee shall be treated as confidential, and their recommendations shall not be disclosed until the report has been made available for the use of each member or has been published in the local official gazette.

Reports by slect committee.

39. (1) When a Bill has been referred to a select committee, the Committee shall make a report thereon.

(2) Reports may be either preliminary or final.

(3) The select committee shall, in their report, state whether or not, in their judgment, the Bill has been so altered as to require republication, whether the publication directed by the rules or by the Council has taken place and the date on which the publication has taken place or, where publication in more than one language is ordered, the date on which the publication in each such language has taken place.

(4) If any member of a select committee desires to record a minute of dissent on any point, he must sign the majority report, stating that he does so subject to his dissent, and must at the same time hand in his minute.

(5) Every such minute of dissent must be confined to a discussion of matter contained in the report, and must be free from personal remarks.

Printing and publication of reports.

40. (1) The Secretary shall cause every report of a select committee to be printed, and a copy of the report shall be made available for the use of each member. The report, with the amended Bill, shall be published in the local official gazette.

(2) If any member is unacquainted with English, the Secretary shall also, if requested, cause the report to be translated for his use into such vernacular language as the President may direct.

Presentation of report and procedure after presentation.

41. (1) Every report by a select committee on a Bill, shall be presented to the Council by the Chairman of the committee.

(2) In presenting a report the Chairman shall, if he makes any remarks, confine himself to a brief statement of fact.

(3) After the presentation of the final report, the member in charge may move—

(i) that the Bill as reported by the select committee be taken into consideration, but any member may object to its being so taken into consideration if a copy of the report has not been available for the use of members for seven days, and such objection shall prevail, unless the President in exercise of his power to suspend this order allows the report to be taken into consideration ; or

(ii) that the Bill be recommitted either—

(a) without limitation, or

(b) with respect to particular clauses or amendments only, or

(c) with instructions to the select committee to make some particular or additional provision in the Bill.

(4) If the member in charge moves that the Bill be taken into consideration, any member may move as an amendment that the Bill be recommitted.

Proposal of amendments.

42. When a motion has been agreed to by the Council that a Bill be taken into consideration, any member may propose an amendment of such Bill.

Notice of amendments.

43. (1) Any member who wishes to move an amendment to any Bill under the consideration of the Council shall send written notice thereof to the Secretary so as to reach him at least ten days before the first day on which the Bill is to be taken into consideration by the Council and shall, together with the notice send a copy of the amendment which he desires to move.

(2) The Secretary shall, if time permits, cause every notice of a proposed amendment to be printed, and a copy shall be made available for the use of each member.

(3) If any member present is unacquainted with English the Secretary, shall also, if requested, and if time permits cause every such notice to be translated into such vernacular language as the President may direct.

Order of amendments.

44. Amendments shall ordinarily be considered in the order of the clauses of the Bill to which they respectively relate.

Submission of Bill clause by clause.

45. Notwithstanding anything in the foregoing orders, it shall be in the discretion of the President when a motion that a Bill be taken into consideration has been carried, to submit the Bill, or any part of the Bill, to the Council clause by clause. When this procedure is adopted, the President shall call each clause separately, and, when the amendments relating to it have been dealt with, shall put the question "that this clause, or (as the case may be) this clause as amended, stand part of the Bill."

Passing of Bills.

46. (1) If no amendment be made when a motion that a Bill be taken into consideration has been agreed to by the Council, the Bill may at once be passed.

(2) If any amendment be made, any member may object to the passing of the Bill at the same meeting ; and such objection shall prevail, unless the President in exercise of his powers to suspend this standing order allows the motion that the Bill be passed to be made.

(3) Where the objection prevails, the Bill shall be brought forward again at a future meeting ; and may then be passed with or without further amendment.

47. When a Bill is passed by the Council the Secretary shall, if necessary, renumber the clauses, revise and complete the marginal notes thereof and make such purely formal consequential amendments therein as may be required and a copy of the Bill shall be submitted to the President and shall be signed by him.

Formal revision of Bill and submission of it to President for authentication.

48. When a Bill, which has originated in the Council, has been passed by both Chambers of the Provincial Legislature, it shall be signed by the President and shall be submitted to the Governor for his assent, and, if assented to by him or by the Governor General or by His Majesty, it shall be published in the local official Gazette as an Act of the Bengal Legislature assented to by the Governor or the Governor General in the name of His Majesty or by His Majesty, as the case may be.

Assent to Bill and publication of Bill as Act.

49. (*1*) When a Bill which has been passed is returned by the Governor to the Council for reconsideration, the point or points referred for reconsideration or the amendments recommended shall be put before the Council by the President and shall be discussed and voted upon in the same manner as amendments to a Bill or in such other way as the President may consider most convenient for their consideration by the Council.

Reconsideration of Bills returned by the Governor.

(*2*) An amendment may be moved at this stage notwithstanding that it raises a question substantially identical with one on which the Council has already given a decision in the same session.

(*3*) No amendments other than the amendments referred to the Council by the Governor shall be admissible at this stage.

50. The member in charge of a Bill may at any stage of the Bill move that the Bill be withdrawn, and, if such motion be carried, the Bill shall be withdrawn accordingly.

Withdrawal of Bills.

51. Communications on matters connected with any Bill before the Council must be addressed to the Secretary.

Communications as to Bills.

52. The Secretary shall, if time permits, cause such communications to be printed, and send a copy to each member, and shall also refer them to the select committee sitting on any Bill to which they may relate.

Circulation of communications.

53. A member who wishes to move a resolution shall give twenty-one days' notice of his intention, and shall, together with the notice, submit a copy of the resolution which he wishes to move:

Notice of resolutions.

Provided that the President, with the consent of the Minister in charge of the Department concerned may allow a resolution to be entered on the list of business at shorter notice than twenty-one days;

Provided also that no member shall, unless he has obtained the special permission of the President, be permitted to send in notice of more than three resolutions during one session of the Council.

Restrictions on the form and contents of resolutions.

54. Subject to the restrictions contained in the rules and the provisions of the standing orders, any member may move a resolution relating to a matter of general public interest :

Provided that no resolution shall be admissible which does not comply with the following conditions, namely :

(*a*) it shall be clearly and precisely expressed and shall raise a definite issue ;

(*b*) it shall not contain arguments, inferences, ironical expressions or defamatory statements, nor shall it refer to the conduct or character of persons except in their official or public capacity ; and

(*c*) it shall not refer to any matter which is under adjudication by a court of law.

Procedure on motion to withdraw.

55. (*1*) A member in whose name a resolution appears on the list of business shall, when called on, either—

(*a*) withdraw the resolution, in which case he shall confine himself to a mere statement to that effect, but may make such brief statement of his reasons for withdrawal as he may consider necessary ; or

(*b*) move the resolution, in which case he shall commence his speech by a formal motion in the terms appearing in the list of business.

(*2*) If the member when called on is absent, the resolution standing in his name shall be considered to have been withdrawn :

Provided that the President in his discretion, may allow another member to move such resolution, or may postpone it.

Limits of discussions.

56. The discussion of a resolution shall be strictly limited to the subject of the resolution.

Amendments.

57. When a resolution is under discussion, any member may, subject to all the rules and orders relating to resolutions, move an amendment to such resolution.

Notice of amendment.

58. (*1*) If a copy of such amendment has not been sent to the Secretary seven days before the day fixed for the discussion of the resolution, any member may object to the moving of the amendment, and such objection shall prevail, unless the President in exercise of his power to suspend this order allows the amendment to be moved.

(2) The Secretary shall, if time permits, cause every amendment to be printed, and send a copy for the information of each member.

Limitation of time of discussion of resolution

59. (1) The President may, if he thinks fit, allot the maximum limit of time which shall be available for the discussion of any resolution of a private member on any day allotted for the discussion of such resolutions.

(2) As soon as the maximum limit of time for discussion is reached, the President shall forthwith put every question necessary to dispose of the resolution under discussion.

(3) Notwithstanding anything contained in sub-section (4) of standing order 28, the President may, in the case of any resolution for the discussion of which he has allotted the maximum time under sub-section (1), prescribe a time-limit for speeches shorter than that referred to in that standing order.

Procedure for taking a resolution out of turn.

60. (1) Notwithstanding anything contained in sub-section (2) of standing order 11, on the written requisition of not less than twenty-three members that a resolution be taken out of its turn on a day allotted for the discussion of resolutions of private members the resolution shall, with the consent of the President and the Minister in charge of the Department concerned, be given precedence on that day over all other resolutions for which a ballot has been held :

Provided that not more than one resolution shall be given such precedence in any one session of the Council.

(2) If more than one such requisition is received in respect of any one day, and the consent required by sub-section (1) is obtained thereto, a special ballot shall be held in such manner as the President may direct to determine which of the resolutions specified in such requisitions shall be given precedence on that day.

(3) A resolution shall not have precedence under this Standing Order or any day unless the Minister concerned has received at least six days' notice, and the members at least twenty-four hours' notice, from the Secretary, that the resolution will be given precedence on that day :

Provided that, with the consent of the President, six days' notice shall not be necessary if the Minister agrees to accept shorter notice.

Time of asking leave.

61. Leave to move a motion for the adjournment of the business of the Council for the purpose of discussing a definite matter of urgent public importance must be asked for after questions and before the list of business for the day is entered upon.

Method of asking leave.

62. The member asking leave must hand to the President a written statement of the matter proposed to be discussed, and must annex thereto the consent of the President in writing, to his motion.

Procedure to be followed.

63. If the President is of opinion that the matter proposed to be discussed is in order, and if it has not been disallowed under the rules, the President shall read the statement to the Council and ask whether the member has the leave of the Council. If no objection is taken, the President shall intimate the hour at which the motion will be taken. If objection is taken, he shall request those members who support the motion to rise in their places, and, if not less than thirteen members rise accordingly, he shall similarly intimate the hour. If less than thirteen members rise, the President shall inform the member that he has not the leave of the Council.

Limitation of time of discussion.

64. (*1*) The debate on a motion to discuss a matter of urgent public importance if not earlier concluded shall automatically terminate at the end of two hours, and thereafter no question can be put.

(*2*) No speech during the debate shall exceed fifteen minutes in duration.

Discussion of Budget.

65. No discussion of the Budget shall take place on the day on which it is presented.

Giving of notice.

66. (*1*) Every notice required by the rules or standing orders shall be given in writing, addressed to the Secretary and may be left at the Council office, which shall be open for this purpose between the hours of 11 and 3 o'clock on every day, except Sunday or a public holiday, or may be posted.

(*2*) Notices left, or delivered by post, when the office is closed shall be treated as given on the next open day.

Journal.

67. (*1*) The Secretary shall keep a journal, in which a short record of the proceedings of the Council for each day shall be fairly entered.

(*2*) The journal shall be submitted after each meeting to the President for his confirmation and signature; and, when so signed, shall be the record of the proceedings of the Council.

Full report of proceedings.

68. (*1*) The Secretary shall also cause to be prepared a full report of the proceedings of the Council at each of its meetings, and publish it as soon as practicable.

(2) He shall send a copy of such report to each member of the Council and to the Governor and the Governor General.

69. The admission to the Council Chamber of— **Admission of strangers.**

(1) visitors to the visitors' gallery,

(2) representatives of the Press to the Press gallery, and

(3) officials

during the sittings of the Council shall be regulated in accordance with orders made by the President with the previous sanction of the Governor:

Provided that until orders are made by the President the orders regulating admission to the Chamber of the Bengal Legislative Council prior to the 1st April, 1937, shall, *mutatis mutandis*, be applicable and the functions of the President thereunder shall, until the appointment of a member to act as President, be exercised by the Minister in charge of the Home Department.

70. The President, whenever he thinks fit, may order the galleries to be cleared. **Power to order withdrawal of strangers.**

By order of the Governor,

G. P. HOGG,

Secretary to the Government of Bengal.

HOME DEPARTMENT.

Constitution and Elections.

NOTIFICATION.

No. 8376A.R.—1st April 1937.—The following notification by His Excellency the Governor, dated the 1st April 1937, is published for general information:—

"In exercise of the power conferred by clause (*a*) of sub-section (2) of section 62 of the Government of India Act, 1935, I hereby summon the Bengal Legislative Assembly to meet at 2-30 p.m. on the 7th April 1937, in the Council House, Calcutta.

CALCUTTA,
The 1st April 1937.

JOHN ANDERSON,
Governor."

G. P. HOGG,
Secy. to the Govt. of Bengal.

HOME DEPARTMENT.

Constitution and Elections.

NOTIFICATION.

No. 8377A.R.—1st April 1937.—The following notification by His Excellency the Governor, dated the 1st April 1937, is published for general information:—

"In exercise of the power conferred by clause (*a*) of sub-section (2) of section 62 of the Government of India Act, 1935, I hereby summon the Bengal Legislative Council to meet at 3 p.m. on the 9th April 1937, in the Council House, Calcutta.

CALCUTTA,
The 1st April 1937.

JOHN ANDERSON,
Governor."

G. P. HOGG,
Secy. to the Govt. of Bengal.

HOME DEPARTMENT.

Constitution and Elections.

NOTIFICATION.

No. 8355A.R.—1st April 1937.—Mr. K. Ali Afzal is appointed to perform the duties of the Secretary to the Bengal Legislative Assembly until further orders.

G P. HOGG,
Secy. to the Govt. of Bengal.

HOME DEPARTMENT.

Constitution and Elections.

NOTIFICATION.

No. 8359A.R.—1st April 1937.—Mr. Kanti Chandra Ghosh is appointed to perform the duties of an Assistant Secretary to the Bengal Legislative Assembly until further orders.

G. P. HOGG,
Secy. to the Govt. of Bengal.

HOME DEPARTMENT.

Constitution and Elections.

NOTIFICATION.

No. 8378A.R.—1st April 1937.—In exercise of the power conferred by section 67 of the Government of India Act, 1935, the Governor is pleased to appoint—

(*a*) Mr. K. Ali Afzal, acting Secretary to the Bengal Legislative Assembly, to be the person before whom members of the said Assembly other than members, if any, who may have already made and subscribed the oath before the Governor in person, shall make and subscribe the oath referred to in that section, until the election of a Speaker, and

(*b*) the Speaker to be the person before whom members of the said Assembly, who have not made and subscribed such oath, shall, after such election, make and subscribe the same.

G. P. HOGG,
Secy. to the Govt. of Bengal.

HOME DEPARTMENT.

Constitution and Elections.

NOTIFICATION.

No. 8379A.R.—1st April 1937.—In exercise of the power conferred by sub-rule (*1*) of rule 5 of the Bengal Legislative Assembly Rules, the Governor is pleased to fix the 7th April 1937 as the date for the holding of the election of the Speaker of the Bengal Legislative Assembly.

G. P. HOGG,
Secy. to the Govt. of Bengal.

HOME DEPARTMENT.

Constitution and Elections.

NOTIFICATION.

No. 8380A.R.—1st April 1937.—In exercise of the power conferred by sub-section (*2*) of Standing Order 5 of the Bengal Legislative Assembly Standing Orders, the Governor is pleased to appoint 1 p.m. on the 6th April 1937 as the time before which a nomination paper for a candidate for election as the Deputy Speaker of the Bengal Legislative Assembly shall be delivered to the Secretary of the said Assembly.

G. P. HOGG,
Secy. to the Govt. of Bengal.

HOME DEPARTMENT.

Constitution and Elections.

NOTIFICATION.

No. 8363A.R.—1st April 1937.—Rai Sahib Monmohan Mukherjee, Second Assistant Secretary to the Government of Bengal in the Legislative Department, is appointed to perform the duties of the Secretary to the Bengal Legislative Council in addition to his own duties until further orders.

G. P. HOGG,
Secy. to the Govt. of Bengal.

HOME DEPARTMENT.

Constitution and Elections.

NOTIFICATION.

No. 8367A.R.—1st April 1937.—Mr. S. A. Enayet Hussain, B.L., is appointed to perform the duties of an Assistant Secretary to the Bengal Legislative Council until further orders.

G. P. HOGG,
Secy. to the Govt. of Bengal.

HOME DEPARTMENT.

Constitution and Elections.

NOTIFICATION.

No. 8381A.R.—1st April 1937.—In exercise of the power conferred by section 67 of the Government of India Act, 1935, the Governor is pleased to appoint—

(*a*) Rai Sahib Monmohan Mukharji, acting Secretary to the Bengal Legislative Council, to be the person before whom members of the said Council other than members, if any, who may have already made and subscribed the oath before the Governor in person, shall make and subscribe the oath referred to in that section, until the election of a President, and

(*b*) the President to be the person before whom members of the said Council, who have not made and subscribed such oath, shall, after such election, make and subscribe the same.

G. P. HOGG,

Secy. to the Govt. of Bengal.

HOME DEPARTMENT.

Constitution and Elections.

NOTIFICATION.

No. 8382A.R.—1st April 1937.—In exercise of the power conferred by sub-rule (*1*) of rule 5 of the Bengal Legislative Council Rules, the Governor is pleased to fix the 9th April 1937 as the date for the holding of the election of the President of the Bengal Legislative Council.

G. P. HOGG,

Secy. to the Govt. of Bengal.

HOME DEPARTMENT.

Constitution and Elections.

NOTIFICATION.

No. 8383A.R.—1st April 1937.—In exercise of the power conferred by sub-section (*2*) of Standing Order 5 of the Bengal Legislative Council Standing Orders, the Governor is pleased to appoint 1 p.m. on the 8th April 1937 as the time before which a nomination paper for a candidate for election as the Deputy President of the Bengal Legislative Council shall be delivered to the Secretary of the said Council.

G. P. HOGG,

Secy. to the Govt. of Bengal.

FINANCE DEPARTMENT.

NOTIFICATION.

No. 3551F.—1st April 1937.—In exercise of the power conferred by sub-section (*1*) of section 265 of the Government of India Act, 1935, the Governor is pleased to appoint Mr. F. W. Robertson, C.I.E., to be the Chairman of the Public Service Commission for the Province of Bengal with effect from the 1st April 1937.

D. GLADDING,

Secy. to the Govt. of Bengal.

FINANCE DEPARTMENT.

NOTIFICATION.

No. 3552F.—1st April 1937.—In exercise of the powers conferred by sub-section (2) of section 265 and sub-section (3) of section 266 of the Government of India Act, 1935, the Governor of Bengal is pleased to make the following regulations, namely:—

THE BENGAL PUBLIC SERVICE COMMISSION REGULATIONS, 1937.

Part I.—Preliminary.

1. These Regulations may be called the Bengal Public Service Commission Regulations, 1937.

2. In these Regulations, unless there is anything repugnant in the subject or context,—

(a) "Commission" means the Bengal Public Service Commission; and

(b) "Governor" means the Governor acting in his discretion;

(c) "Member" means a Member of the Commission and includes the Chairman thereof;

(d) "the Act" means the Government of India Act, 1935.

Part II.—Composition of Commission, pay and tenure of office.

3. The Commission shall consist of a Chairman and two other Members.

4. The Chairman shall receive a pay of Rs. 3,000 a month, and each of the other Members a pay of Rs. 2,000 a month.

5. (a) A Member who, prior to his appointment as such, has retired from the service of the Crown in India, may draw, in addition to his pay as Member, such annuity, pension, allowance or gratuity as has been sanctioned in respect of his previous service.

(b) A Member who, at the time of his appointment as such, is in the service of the Crown in India, shall, during his term of office on the Commission, and subject to the provisions of regulation 10, continue to be governed, as regards retirement and pension, by the rules applicable to the service to which he belongs. If, under those rules, he is required or permitted to retire or resign from the said service during his term of office on the Commission, he may, in addition to his pay as Member, draw from the date of such resignation or retirement, such annuity, pension, allowance or gratuity as is admissible to him under the rules applicable to the service to which he belongs and is sanctioned.

6. A Member shall hold office for five years:

Provided that—

(a) a Member's tenure of office may be extended by the Governor by any period not exceeding five years;

(b) no Member may continue to serve after he has reached the age of 65 years;

(c) the appointment of any Member may be terminated by the Governor at any time, if the Member is for any reason unable or unfit to continue to perform the duties of his office.

7. An officiating appointment may be made in the place of any Member absent on leave or on the occurrence of a vacancy in the office of a Member until the permanent incumbent has returned from leave or some person has been permanently appointed to the office and has entered upon the discharge of the duties thereof.

Part III.—Leave.

8. A Member who at the date of his appointment was in the service of the Crown in India may be granted leave under the rules applicable to him and his service as Member shall count for such leave.

9. A Member who at the date of his appointment was not in the service of the Crown in India may be granted leave as follows:—

(*a*) Leave on leave salary equivalent to full pay up to one-eleventh of the period spent on duty as a Member subject to a maximum of four months at any one time.

(*b*) Leave on medical certificate on leave salary equivalent to half pay subject to a maximum of three months at any one time;

(*c*) Extraordinary leave without allowances subject to a maximum of three months at any one time.

Explanation.—All or any two, of these kinds of leave may be granted in combination at any one time.

Part IV.—Pension.

10. No pension shall attach to the office of Member as such, but in the case of a Member who at the date of his appointment was in the service of the Crown in India in a pensionable capacity, service as Member up to the age of 55 shall count for pension under the rules applicable to the service to which such Member belongs and shall, unless the Member be a member of the Indian Civil Service, also count for the higher additional pension under rule 475-A, Civil Service Regulations.

Part V.—Passages.

11. (*a*) A Member who, at the time of his first appointment, is—

(*i*) domiciled and permanently resident elsewhere than in Asia; and

(*ii*) is on leave preparatory to retirement from the service of the Crown in India or is not in the service of the Crown in India,

shall be entitled to one first-class single passage from a port outside Asia to a port in India not exceeding the cost of a single passage by sea between Bombay and London by P. & O. First-class "B":

Provided that, should the cost of the passage engaged be less than the cost of a passage by sea between Bombay and London by P. & O. First-class "B" and should any part of the journey between port and port be performed by land, the Member concerned shall be entitled to the actual cost of the railway fare but not exceeding the difference between the cost of the passage engaged and the cost of passage by sea between Bombay and London by P. & O. First-class "B."

Note (*1*).—A journey by land may be deemed to include the passage across the English Channel and railway fare may be deemed to include the cost of such a passage.

Note (*2*).—Colombo shall be deemed to be a port in India.

(*b*) A Member who, at the date of his appointment, was in the service of the Crown in India and was eligible for passage benefits, shall be entitled as Member to passage benefits equivalent to the balance remaining to his credit in his passage account immediately prior to his appointment as Member.

(*c*) A Member who, prior to the date of his appointment, has retired from the service of the Crown in India but who, while in service, was eligible for passage benefits, shall be entitled as Member to such passage benefits as may have lapsed to Government in accordance with the passage rules applicable to him prior to retirement.

(*d*) The passage benefits to which he may be entitled under sub-regulations (*b*) and (*c*) may be enjoyed by a Member in addition to the passage to which he may be entitled under sub-regulation (*a*).

Part VI.—Travelling Allowance.

12. (*a*) For journeys on duty, a Member may draw such travelling allowance as would be admissible to a Government servant of the first grade in respect of similar journeys.

(*b*) No travelling allowance will be granted to a Member on first appointment for a journey to join the Commission, save that a Member who, on the date of his first appointment as such, is in the service of the Crown in India, may draw for the journey to join the Commission the travelling allowance which would be admissible to him for a journey on transfer under Section XI of the Subsidiary Rules for Travelling Allowance under Fundamental Rule 44.

Part VII.—Provident Fund.

13. A Member who, at the date of his appointment, was in the service of the Crown in India and prior to that date had been admitted to the benefits of a special or a contributory provident fund maintained by Government, shall be eligible after appointment to continue to subscribe to the said fund on the same terms and conditions and subject to the same rules as previously:

Provided that on attaining the age of 55 the amount standing to his credit in the fund or the balance thereof after such deductions have been made as are authorised under the rules applicable to him, shall, notwithstanding anything contained in the said rules, become payable to him and shall be paid in the manner provided in section 4 of the Provident Funds Act, 1925 (XIX of 1925), and Government will make no contribution to nor pay any interest on his account in the fund for any period after he has attained the age of 55.

Part VIII.—Staff of the Commission.

14. The staff of the Commission shall consist of—

(*i*) a Secretary;

(*ii*) such number of clerks and menials as may from time to time be sanctioned by the Governor.

Part IX.—The Secretary.

15. The Secretary shall be appointed by the Commission with the approval of the Governor.

16. The Secretary shall hold office for a period of five years inclusive of any period spent on leave:

Provided that the Governor may extend the tenure of office of the Secretary by a period not exceeding five years at a time.

17. If, on the date of his appointment as Secretary, the person so appointed is in the service of the Crown in India, he shall receive pay according to the time-scale of the service to which he belongs and, in addition, shall receive a special pay of Rs. 150 per mensem; otherwise he shall be paid a salary on the scale of Rs. 750—50—1,000 per mensem.

18. If, on the date of his appointment as Secretary, the person so appointed is in the service of the Crown in India in a pensionable capacity his service as Secretary shall count for pension under the rules applicable to the branch of the service to which he belonged immediately prior to such appointment; otherwise he shall be required to subscribe to a contributory provident fund under the terms of the Contributory Provident Fund Rules (Bengal).

19. If, on the date of his apointment as Secretary, the person so appointed is in the service of the Crown in India, he shall be allowed leave under the rules applicable to him immediately prior to such appointment and his service as Secretary shall count for such leave; otherwise his leave shall be governed by special orders which shall ordinarily be modelled on the Provincial Government's "Leave terms for officers engaged on contract."

20. Subject to the provisions of regulations 17, 18 and 19, the Secretary shall in the matter of his pay, allowances (including travelling allowance), leave, leave salary, pension and other conditions of service be governed by the rules for the time being in force and generally applicable to persons holding appointments under the Provincial Governments.

Part X.—Clerical and menial establishment.

21. The clerical and menial establishment of the Commission shall be appointed by the Secretary.

22. The clerical and menial establishment shall be paid salaries on the following scales:—

(*i*) Clerks—Rs. 110—12/2—170—5/2—175.

(*ii*) Clerks—Rs. 45—45—50—6/2—80—5/2—105.
(Efficiency bar after 14th stage.)

(*iii*) Typists—Rs. 45—5/2—70.

(*iv*) Stenographer—80—5/2—105—10/2—155.
(Efficiency bar after 10th stage.)

(*v*) Jamadar—20—1/2—24.

(*vi*) Peons—Rs. 15—1/5—19.

23. A person appointed to the clerical or menial establishment shall be governed in respect of leave by the rules which were applicable to him immediately prior to his appointment to the said establishment, or if at the time of his appointment he was not in the service of the Crown in India, by the Bengal Services (Revision of Leave) Rules, 1934.

24. Subject to the provisions of regulations 22 and 23, the members of the clerical and menial establishments shall, in the matter of their pay, allowances (including travelling allowance), leave salary, pension and other conditions of service, be governed by the rules for the time being in force and generally applicable to persons holding appointments under the Provincial Government.

Part XI.—Control, discipline and appeal.

25. The Commission may, for good and sufficient reason, remove or dismiss the Secretary, provided the Secretary was not, on the date of his appointment to the post, in the service of the Crown in India.

26. The Chairman may, for good and sufficient reason, impose upon the Secretary any of the penalties prescribed in rule 49 of the Civil Services (Classification, Control and Appeal) Rules other than those of removal and dismissal.

27. The Secretary may, for good and sufficient reasons, impose upon the members of the clerical and menial establishments any of the penalties prescribed in rule 49 of the Civil Services (Classification, Control and Appeal) Rules.

28. An appeal from any order passed by the Commission under regulation 25 or by the Chairman under regulation 26 shall lie to the Governor.

29. An appeal from an order of removal or dismissal passed by the Secretary under regulation 27 shall lie to the Commission, and an appeal from any order other than one of removal or dismissal passed by the Secretary under the said regulation shall lie to the Chairman.

Part XII.—General Provision.

30. In respect of any matter for which special provision is not made by these regulations, the conditions of service of a person serving as a Member of the Commission or on its staff shall be governed by the rules and orders for the time being applicable to such classes of Government servants as shall be specified by the Governor.

Part XIII.—Matters on which it shall not be necessary to consult the Commission.

31. It shall not be necessary to consult the Commission with respect to the matters specified in clauses (*a*) and (*b*) of sub-section (*3*) of section 266 of the Act for those services and posts the appointing authority for which is an authority subordinate to the Provincial Government.

32. With respect to recruitment by promotion to the Bengal Police Service and to the posts of Assistant Commissioner of Police, Calcutta, it shall not be necessary to consult the Commission, except with regard to—

(*a*) the claims of such candidates as may be nominated by the Governor or the Inspector-General of Police or the Commissioner of Police, Calcutta, as the case may be; and

(*b*) in the case of each candidate so nominated, whether his qualifications are sufficient and whether his record proves him to have the requisite character and ability for the service to which it is proposed to appoint him.

33. Subject to the provisions of regulation 35, when a post in the Bengal General Service is filled by promotion from a post in that service subordinate to such post, it shall not be necessary to consult the Commission.

Illustrations.

(*a*) The Second Assistant Secretary, Legislative Department, is subordinate to the First Assistant Secretary, Legislative Department.

(*b*) An Electric Inspector is subordinate to the Electrical Adviser and Chief Inspector.

(*c*) The Registrar, Court of Small Causes, Calcutta, is not subordinate to the Administrator-General and Official Trustee.

34. It shall not be necessary to consult the Commission with respect to the filling of the posts in the Bengal General Service specified in Schedule A annexed hereto when such posts are filled by promotion or transfer from another Provincial Service.

35. It shall not be necessary to consult the Commission with respect to the filling of the posts in the Bengal General Service specified in Schedule B annexed hereto, except on the claims of such candidates as may be nominated by the Governor.

36. Where Assistant Secretaryships to Government in the Bengal General Service, other than those in the Legislative Department, are filled by promotion from the Secretariat clerical staff, it shall not be necessary to consult the Commission, except on the claims of such candidates as may be nominated by the Governor.

37. With respect to the filling of the posts of Registrar in the Secretariat in the Bengal General Service, it shall not be necessary to consult the Commission, except on the claims of such candidates as may be nominated by the Governor.

38. With respect to the posts of Personal Assistant in the Bengal General Service, where appointment is made by promotion from a subordinate or clerical service, it shall not be necessary to consult the Commission, except on the claims of such persons as may be nominated by the Governor.

39. It shall not be necessary to consult the Commission with respect to the filling of any officiating appointment.

40. It shall not be necessary to consult the Commission with respect to any appointment to a temporary post, the necessity for which is declared at the time of its creation to be unlikely to continue for more than a year, and which is filled by a person not already confirmed in a civil service or employed in a civil post on a contract.

41. It shall not be necessary to consult the Commission with respect to any appointment to a temporary post which is filled by a person who has already been confirmed in a civil service or is already employed in a civil post on a contract.

42. It shall not be necessary to consult the Commission with respect to any appointment to a part-time post, where such post is filled by an officer who is already confirmed in a civil service or is already employed in a civil post on a contract.

43. It shall not be necessary to consult the Commission with regard to the termination of the probation of any person.

44. It shall not be necessary to consult the Commission with regard to the discharge or reversion of an officer otherwise than as a penalty.

45. It shall not be necessary to consult the Commission regarding the termination of the employment of any person in accordance with the terms of his contract of employment.

46. It shall not be necessary to consult the Commission with respect to the imposition of any penalty laid down in any rule or order for failure to pass any test or examination within a specified time.

47. It shall not be necessary to consult the Commission with respect to any case in which the Commission at any previous stage has given advice in regard to the orders to be passed and in which no fresh question has thereafter arisen for their determination.

48. In regard to petitions and memorials in disciplinary cases it shall not be necessary for the Commission to be consulted before an order rejecting such a petition is passed by the Governor.

49. It shall not be necessary to consult the Commission with respect to the matters specified in clauses (*a*) and (*b*) of sub-section (*3*) of section 266 of the Act in the case of posts in the Eastern Frontier Rifles (Bengal Battalion).

50. It shall not be necessary to consult the Commission with respect to the matters specified in clauses (*a*), (*b*) and (*c*) of sub-section (*3*) of section 266 of the Act in the case of officers of His Majesty's forces to be appointed to or holding civil posts under the Provincial Government.

51. It shall not be necessary to consult the Commission with respect to the matters specified in clauses (*a*), (*b*) and (*c*) of sub-section (*3*) of section 266 of the Act in the case of persons whose appointment the Governor is empowered by or under the Act to make either in his discretion or exercising his individual judgment.

52. With respect to the matters specified in clause (*c*) of sub-section (*3*) of section 266 of the Act,

(*a*) it shall not be necessary to consult the Commission prior to the passing of orders by any authority subordinate to the Provincial Government which is competent to pass such orders; and

(*b*) it shall not be necessary to consult the Commission in the case of disciplinary orders of the Provincial Government imposing on members of a subordinate service any of the following punishments:—

(*i*) formal censure;

(*ii*) withholding an increment or promotion, including stoppage at an efficiency bar; and

(*iii*) suspension, where such suspension is imposed not as a punishment, but to facilitate the proper investigation of a case against a suspended officer.

Schedule A.

(Regulation 34.)

1. Assistant Secretaries to Government, other than those in the Legislative Department and other than those covered by regulation 36.

2. Additional Chief Presidency Magistrate, Calcutta.

3. Stipendiary Presidency Magistrates, Calcutta.

4. Municipal Magistrate, Calcutta.

5. Assistant Registrars of Co-operative Societies, Bengal.

6. Engineer Superintendent, Government Dockyard, Narayanganj.

7. Registrar, Presidency Small Cause Court.

8. Registrar, Presidency Magistrate's Court.

9. Personal Assistant to the Surgeon-General with the Government of Bengal.

Schedule B.

(Regulation 35.)

1. Commissioner of Excise and Salt, Bengal.

2. Officer-in-charge of the Bengal Traverse Party and Drawing Office.

3. Assistant to the Officer-in-charge of the Bengal Traverse Party and Drawing Office.

4. Registrar of Co-operative Societies, Bengal, when the appointment is filled by an officer other than a member of the Indian Civil Service.

5. Inspector-General of Registration, Bengal.

D. GLADDING,
Secy. to the Govt. of Bengal.

JUDICIAL AND LEGISLATIVE DEPARTMENTS.

Judicial.

NOTIFICATION.

No. 2547J.—1st April 1937.—In exercise of the power conferred by sub-section (*1*) of section 55 of the Government of India Act, 1935, the Governor is pleased to appoint Sir Asoka Kumar Roy, Kt., to be Advocate-General for the Province of Bengal, with effect from the 1st April 1937.

N. G. A. EDGLEY,
Secy. to the Govt. of Bengal.

JUDICIAL AND LEGISLATIVE DEPARTMENTS.

Judicial.

NOTIFICATION.

No. 2549J.—1st April 1937.—The Governor is pleased to issue the following directions regarding the appointment and remuneration of the Advocate-General of the Province of Bengal and the duties to be referred or assigned to him, namely:—

Advocate-General.

1. *Terms and conditions of appointment.*—(*a*) The Advocate-General is the Chief Legal Adviser of the Government of Bengal. Subject to the provisions of section 55 of the Government of India Act, 1935, his appointment shall ordinarily be for a term of five years, but terminable earlier on six months' notice by either the Governor or the Advocate-General and renewable at the option of the Governor at the end of the period. Such renewals shall not be restricted in number but shall never exceed five years at a time. He will receive a monthly retainer of Rs. 2,000 which will cover all his work of an advisory nature as well as the duties enumerated in Rule 3 *post*.

(*b*) During any absence or deputation of the Advocate-General, the Governor may appoint a person to act as Advocate-General and the person so appointed will receive the full amount of the retainer of the post and exercise all the powers of an Advocate-General until his predecessor in office has returned to his duties.

2. *Statutory powers and functions.*—The Statutory powers and functions vested in the Advocate-General, Bengal, are as follows:—

(*i*) East Indian Company Act, 1813, 53 Geo. 3, c. 155, s. III; power to file information for debts due to the Crown.

Note.—This power was kept alive by section 2 of the Government of India Act, 1833, and again by section 1 of the Government of India Act, 1853, merged in the Government of India Act, 1858.

This has not been limited or affected by the Code of Civil Procedure (section 79 of Code).

(*ii*) Civil Procedure Code, Act V of 1908, s. 91; power to institute and sanction suits in respect of public nuisances.

(*iii*) Civil Procedure Code, section 92; power to institute and sanction suits in cases of public trusts of a charitable or religious nature.

All Collectors and Deputy Commissioners are empowered under section 93 of the Civil Procedure Code to exercise within the limits of their respective districts (excluding the town of Calcutta) the power conferred by sections 91 and 92 of the Code.

(Eastern Bengal and Assam Government notification No. 704J., dated the 22nd February 1909, and Bengal Government notification No. 3592L.R., dated the 15th April 1918.)

These notifications do not, however, divest the Advocate-General, Bengal, of his powers under sections 91 and 92 though these enable them also to be exercised by the above officers of the Local Government.

(*iv*) Indian High Courts Act, 1861, Letters Patent for the High Court, 1865, clause 26; power to certify for review of criminal cases tried on the Original Side of the High Court on ground of error of law.

(*v*) Criminal Procedure Code, Act V of 1898, section 333; power to stay proceedings in the High Court at any stage of a criminal trial.

(*vi*) Criminal Procedure Code, section 194 (*2*); power (with the previous consent of the Government of India or of the Local Government) to exhibit information for all purposes for which the Attorney-General may exhibit information on behalf of the Crown in the High Courts of Justice in England.

Note.—The Attorney-General has power to exhibit ex-officio criminal information (as a mode of instituting criminal proceedings without indictment by a Grand Jury) in any case of misdemeanour as distinguished from felony.

(*vii*) Criminal Procedure Code, section 495 (1); the right to conduct a prosecution before any Magistrate without permission of the Magistrate.

(*viii*) Lunacy Act, IV of 1912, section 39; power to make application for inquisition in Lunacy.

3. *Duties without fees.*—In addition to the duties the Advocate-General has to perform under English and Indian Statutes, he shall perform without fees the following duties:—

(*i*) He will advise upon any matter upon which he is consulted by the Governor through the Government Solicitor, the Legal Remembrancer or the Standing Counsel.

(*ii*) He will appear in the following civil cases:—

(*a*) Cases in the ordinary or extraordinary Original Jurisdiction of the High Court to which the Province is a party.

(*b*) Cases in the ordinary or extraordinary Original Jurisdiction of the High Court to which Government officers are parties and which the Governor has decided to conduct on behalf of such officers.

(*c*) Cases in the ordinary or extraordinary Original Jurisdiction of the High Court in which neither the Governor nor Government officers are directly interested, but in which the Governor considers himself to be sufficiently interested to render it advisable to conduct the cases on behalf of some third person.

This does not include cases of the Court of Wards, Calcutta Corporation, Calcutta Improvement Trust, Calcutta Port Trust or any other public corporate body. Cases of such quasi-public departments as the Board of Examiners are however included.

(*d*) Original cases of the same nature as those referred to in items (*a*), (*b*) and (*c*) originally filed in some other Court and transferred to the High Court.

(*iii*) Appeals from the cases referred to in clause (*ii*).

(*iv*) He will appear in the High Court (Original Side) in the references under the Stamp Act, Probate Act and the like.

(*v*) He will similarly appear when so required before the High Court on its Original Side in references from the Presidency Small Causes Court Judges to which the Province is a party or can otherwise be heard.

Note.—In all the above cases the Advocate-General will be at liberty should he be so disposed, to claim his fees if recovered from the other party.

(*vi*) He will represent the Crown at all stages in all criminal cases arising within the ordinary Original Jurisdiction of the High Court, whether the Tribunal be a Judge and Jury or a Special Tribunal and in all quasi-criminal matters such as cases under the Press Act, Habeas Corpus and Extradition cases arising within the same limits provided always that the Governor considers that owing to the special importance of the case the attendance of the Advocate-General is desirable.

Note.—Ordinary criminal prosecutions in the High Court are left to the Standing Counsel.

4. *Scale of fees.*—The Advocate-General will appear in any case other than those mentioned in rule 3 when so required by the Legal Remembrancer, and will be paid fees according to the following scale:—

(*i*) Appearance in the High Court—

(*a*) Regular civil appeals, criminal appeals, miscellaneous proceedings in which evidence is taken or the hearing of which extends for the whole day—30 gold mohurs.

Note.—Analogous criminal appeals and references arising from the same judgment shall be deemed to be one appeal or reference for the purpose of this rule.

(*b*) Second appeals, miscellaneous appeals motions and other miscellaneous proceedings except those mentioned above—15 gold mohurs.

Note—Analogous second appeals and application arising from the same judgment shall be deemed to be one appeal or application for the purpose of this rule.

(*c*) Appearance before special benches of the Calcutta High Court if the case is one arising outside the limits of Ordinary Original Jurisdiction of the High Court—30 gold mohurs.

(*ii*) Appearance in Calcutta outside the High Court such as appearances in the Police Court, Small Causes Court or Board of Revenue—30 gold mohurs.

(*iii*) Appearances in Howrah, Alipore, Sealdah or elsewhere in the suburbs of Calcutta—45 gold mohurs.

(*iv*) Appearance in the mufassal outside the above limits—60 gold mohurs.

(*v*) Consultation fee in cases for appearance in which fees are payable each—5 gold mohurs.

Note.—Ordinarily one consultation fee only will be allowed. The Legal Remembrancer, however, before delivering the brief will, after consulting the lawyer-in-charge of the case, form an estimate of the number of consultations which may be necessary and will inform the Advocate-General accordingly. This number may be increased in a proper case at the instance of the Advocate-General and on a reference to the Legal Remembrancer. If in the course of a trial or appeal an immediate consultation becomes necessary, the Advocate-General will be entitled to hold the same and will inform the Legal Remembrancer without delay.

(*vi*) *Perusal fee.*—No fee is ordinarily admissible.

Note.—The Legal Remembrancer, however, after consulting the lawyer-in-charge of the case may recommend a special perusal fee, if claimed, in cases of complexity involving prolonged labour, which will be fixed by the Governor exercising his individual judgment.

(*vii*) When two or more regular civil appeals are heard together on the Appellate Side of the High Court 30 gold mohurs for the first appeal and 7½ gold mohurs for each analogous appeal subject to a maximum of sixty gold mohurs for the whole day.

5. *Governor's power*—The Governor may grant fees to the Advocate-General in any cases falling within the classes for which ordinarily he would receive no fees provided they are of exceptional difficulty or that the hearings have been or likely to be unduly prolonged.

6. *Approval of Finance Department.*—When the Legal Remembrancer proposes to engage the Advocate-General or the Standing Counsel at a fee higher than their prescribed rates or any counsel at a fee higher than twenty gold mohurs, he will obtain the previous approval of the Finance Department to the fee proposed. When, however, there is no time to make a reference to the Finance Department, the Legal Remembrancer may act on his own responsibility and refer to the Finance Department as soon as possible after the engagement is made.

7. *His limitations.*—The Advocate-General as conditions of his service is debarred from—

(*i*) Advising or holding briefs against the Province;

(*ii*) Defending accused persons in criminal prosecutions; unless specially authorized by the Governor.

[*e. g.*, in a private prosecution in which Government is not interested.]

(*iii*) Advising private parties in cases in which he is likely to be called on to advise the Governor; and

(*iv*) Accepting appointment as a Director in any Company without the sanction of the Governor.

The officer himself must, however, be the judge as to whether he can, or cannot under rule (*iii*) advise on a question of law any private party who applies to him.

8. *Control of expenditure.*—The Legal Remembrancer is the controlling officer in respect of expenditure incurred by the Advocate-General.

N. G. A. EDGLEY,

Secy. to the Govt. of Bengal.

JUDICIAL AND LEGISLATIVE DEPARTMENTS.

Judicial.

NOTIFICATION.

No. 2550J.—1st April 1937.—In exercise of the power conferred by sub-section (*4*) of section 220 of the Government of India Act, 1935, (26 Geo. 5, Ch. 2), the Governor is pleased to appoint the Chief Justice of the High Court of Judicature at Fort William in Bengal, or in his absence the senior Judge of the Court, as the person before whom every person appointed to be a Puisne Judge of that Court shall, before he enters upon his office, make and subscribe an oath according to the form set out in that behalf in the Fourth Schedule to the said Act.

N. G. A. EDGLEY,

Secy. to the Govt. of Bengal.

REVENUE DEPARTMENT.

Land Revenue.

NOTIFICATION.

No. 7521L.R.—1st April 1937.—In exercise of the power conferred by sub-section (*2*) of section 296 of the Government of India Act, 1935, the Governor is pleased to direct that the Board of Revenue, Bengal, shall be constituted the tribunal referred to in the said sub-section to exercise such jurisdiction to entertain appeals or revise decisions in revenue cases as was vested in the Local Government immediately before the commencement of Part III of the said Act, except appeals from or the revision of orders passed by the Board of Revenue.

J. B. KINDERSLEY,

Secy. to the Govt. of Bengal (offg.).

Printed and published by the Superintendent, Government Printing, Bengal Government Press, Alipore, Bengal, on the 1st April 1937.

Registered No. C207

The Calcutta Gazette

Extraordinary

Published by Authority

THURSDAY, APRIL 1, 1937.

GOVERNMENT HOUSE,
Calcutta.

1st April 1937.—The following Royal Message has been received by His Excellency the Governor General and is published for general information.

JOHN ANDERSON,
Governor of Bengal

"To-day the first part of those constitutional reforms upon which Indians and British alike have bestowed so much thought and work comes into operation. I cannot let the day pass without assuring my Indian subjects that my thoughts and good wishes are with them on this occasion.

A new chapter is thus opening and it is my fervent hope and prayer that the opportunities now available to them will be used wisely and generously for the lasting benefit of all my Indian people.

GEORGE R.I."

Printed and published by the Superintendent, Government Printing, Bengal Government Press, Alipore, Bengal, on the 1st April 1937.

Registered No. C207

The Calcutta Gazette

Extraordinary

Published by Authority

THURSDAY, APRIL 1, 1937.

GOVERNMENT OF BENGAL.

HOME DEPARTMENT.

CORRIGENDUM.

For rule 19, on page 92 of the *Calcutta Gazette* Extraordinary of to-day's date substitute the following:—

"19. Any person holding immediately prior to the 1st April 1937 a post to which he was duly appointed in the Bengal Legislative Council Department shall be deemed to have been duly appointed in accordance with these rules to a corresponding post in the Assembly Department."

G. P. HOGG,
Secy. to the Govt. of Bengal.

Printed and published by the Superintendent, Government Printing, Bengal Government Press, Alipore, Bengal, on the 1st April 1937.

Registered No. C207

The Calcutta Gazette

Extraordinary

Published by Authority

MONDAY, APRIL 5, 1937.

GOVERNMENT OF BENGAL.

HOME DEPARTMENT.

Constitution and Elections.

NOTIFICATION.

No. 8689 A. R.—5th April 1937.—In pursuance of the provisions of rule 86 of the Bengal Legislative Council Electoral (Conduct of Elections) Rules, 1936, the names of the members of the said Council elected for the constituencies mentioned opposite their names and specified in Parts I to III of the Schedule below and of the members of the said Council elected by the members of the Bengal Legislative Assembly and specified in Part IV of that Schedule and of the members of the said Council chosen by the Governor under clause (*d*) of paragraph 14 of the Fifth Schedule to the Government of India Act, 1935, and specified in Part V of the Schedule below are hereby notified :—

The Schedule.

Constituency.		Name.
	IA.—General Constituencies (Urban).	
Calcutta	..	Srish Chandra Chakraverti.
Calcutta Suburbs	..	Kanai Lal Goswami.
	IB.—General Constituencies (Rural).	
Burdwan Division South-West	..	Rai Manmothanath Bose Bahadur.
Burdwan Division North-East	..	Rai Satish Chandra Mukherji Bahadur.
Presidency Division	..	Ranajit Pal Choudhury.
Rajshahi Division North-West	..	Jatindra Mohan Sen (Rai Sahib).
Rajshahi Division South-East	..	Brojendra Mohan Moitra (Rai Bahadur).
Dacca Division North	..	Rai Keshab Chandra Banerjee Bahadur.
Dacca Division South	..	Indu Bhusan Sarkar.
Chittagong Division	..	Lalit Chandra Das.
	IIA.—Muhammadan Constituencies (Urban).	
Calcutta and Suburbs	..	Shaikh Muhammad Jan.

Constituency.		Name.

II B.—Muhammadan Constituencies (Rural).

Burdwan Division	..	Naziruddin Ahmed.
Presidency Division South	..	S Fazal Elahi.
Presidency Division North	..	Ataur Rahman, Khan Bahadur.
Rajshahi-*cum*-Malda	..	Ashraf Ali Khan Chowdhury.
Rajshahi Division North	..	Mukleswar Rahman.
Rangpur	..	Mohammad Asaf Khan (Khan Bahadur).
Bogra-*cum*-Pabna	..	Mohammed Ibrahim (Khan Bahadur).
Dacca North-West	..	Khwaja Muhammad Esmail.
Dacca South-East	..	Kazi Abdur Rashid.
Mymensingh West	..	Abdul Hamid Choudhury, Khan Sahib.
Mymensingh East	..	Khan Bahadur Abdul Karim.
Faridpur	..	Choudhury Moazzemali *alias* Lal Mia.
Bakarganj	..	Khorsedalam Choudhury.
Tippera	..	Syed Muhammad Ghaziul Huq.
Noakhali	..	Rezzaqul Haider Chaudhury.
Chittagong	..	Nur Ahamed.

III.—European Constituency.

European	..	W. B. G. Laidlaw. C. K. Nicholl. J. A. McKerrow.

IV.—Elected by the members of the Bengal Legislative Assembly.

Dr. Radha Kumud Mookerjee.
Khan Sahib Subidali Molla.
Kamini Kumar Datta.
Muhammad Hossain (Calcutta).
The Hon'ble Sir Manmatha Nath Roy Choudhury, Kt., Maharaja of Santosh.
Rai Radhika Bhusan Roy Bahadur.
T. Lamb.
The Hon'ble Sir George Campbell.
Seth Hanuman Prosad Poddar.
Bankim Chandra Datta.
Naresh Nath Mookerjee.
Muhammad Akram Khan.
Sachindra Narayan Sanyal.
Hamidul Huque Chowdhury.
Mesbahuddin Ahmed.
Kader Baksh.
Saileswar Singh Roy.
Nagendra Narain Roy.
Satyendra Chandra Mitra.
Khan Bahadur Syed Muazzamuddin Hosain.
Narendra Chandra Datta.
Humayun Z. A. Kabir.
Raja Bhupendra Narayan Sinha Bahadur of Nashipur.
Nawabzada Kamruddin Haidar.
E. C. Ormond.
M. Shamsuzzoha.
Rai Surendra Narayan Sinha Bahadur.

V.—Chosen by the Governor.

Begum Hamida.
Mrs. D'Rozario.
Krishna Chandra Roy Chowdhury.
Latafat Hossain.
Dr. Arabinda Barua.
D. J. Cohen.

G. P. Hogg,

Secy. to the Govt. of Bengal.

Printed and published by the Superintendent, Government Printing, Bengal Government Press, Alipore, Bengal, on the 5th April 1937.

Registered No. C207

The Calcutta Gazette

Extraordinary

Published by Authority

TUESDAY, APRIL 6, 1937.

GOVERNMENT OF BENGAL.

HOME DEPARTMENT.

Constitution and Elections.

NOTIFICATION.

No. 8669A.R.—5th April 1937.—The following notification by His Excellency the Governor is published for general information:—

"In exercise of the power conferred by sub-section (3) of section 65 of the Government of India Act, 1935, I hereby appoint Mr. Eric Studd, a member of the Bengal Legislative Assembly, to perform the duties of the office of the Speaker of the said Assembly until a Speaker is elected.

JOHN ANDERSON,
Governor."

CALCUTTA,
The 5th April 1937.

G. P. HOGG,
Secy. to the Govt. of Bengal.

Printed and published by the Superintendent, Government Printing, Bengal Government Press, Alipore, Bengal, on the 6th April 1937.

Registered No. C207

No. 14 of 1937

The Calcutta Gazette

Published by Authority

THURSDAY, APRIL 8, 1937.

CONTENTS:

	Page.
PART I.—Orders and Notifications by the Governor of Bengal, the Government of Bengal, the High Court, Government Treasury, etc.	789—858
PART IA.—Orders and Notifications by the Government of India republished for general information ..	219—405
PART IB.—Educational Notices .	409—414
PART II.—Advertisements .	355—360
PART III.—Acts of the Bengal Legislative Council	Nil
PART IV.—Bills introduced in the Bengal Legislative Council, Reports of Select Committees presented or to be presented to that Council and Bills published before introduction in that Council ..	Nil
PART V.—Acts of the Indian Legislature assented to by the Governor-General and Ordinances promulgated under section 72 of the Government of India Act -	
The Indian Naval Armament (Amendment) Act, 1937 ..	1—2
PART VI. Bills introduced in the Council of State and Legislative Assembly, Reports of Select Committees presented to the Council and Assembly and Bills published under rule 18 of the Indian Legislative Rules -	
The Indian Finance Bill, 1937, with Statement of Objects and Reasons ..	85—88
APPENDIX General Jury List—List of persons liable to serve on Common and Special Juries in the High Court of Judicature at Fort William in Bengal for the year ensuing from 1st May 1937 pursuant to Act V of 1898	1—498
SUPPLEMENT No. 14 : -	
Corporation of Calcutta Notice Calcutta Improvement Trust Notification—Daily Rainfall Monthly and Annual Rainfall—Monthly Return of Vital Statistics—Weekly Gauge Readings—Weekly Weather and Crop Report—Price-list (retail) of Staple Food-Crops of Bengal Cotton Ginning and Pressing	377—430

PART I

Orders and Notifications by the Governor of Bengal, the Government of Bengal, the High Court, Government Treasury, etc.

Orders by the Government of Bengal.

No 4017A

Appointments and Transfers.

GENERAL.

Tippera.—No 3310A.—25th March 1937.—In modification of the orders of the 11th March 1937, Mr. S S. R. Hattiangadi, I.C.S., on leave, is appointed to act, until further orders, as District and Sessions Judge, Tippera.

Dacca.—No 3366A.—30th March 1937.—Babu Basanta Kumar Das, Deputy Magistrate and Deputy Collector, on leave, is posted to the headquarters station of the Dacca district

Murshidabad - Jessore.—No. 3374A.—30th March 1937.—Maulvi Wali-ul Islam, Deputy Magistrate and Deputy Collector, is appointed to have charge of the Sadar subdivision of the Jessore district, on being relieved of his present appointment as Manager of the estate of the Nawab Bahadur of Murshidabad

Bankura - Tippera. — No. 3379A.—30th March 1937.—Babu Sachindra Nath Chatarji, Deputy Magistrate and Deputy Collector, Vishnupur, Bankura, is appointed to have charge of the Brahmanbaria subdivision of the Tippera district.

Nadia-Rajshahi.—No. 3383A.—30th March 1937.—Rai Sahib Brindaban Chandra De, Deputy Magistrate and Deputy Collector, Nadia, is transferred to the headquarters station of the Rajshahi district

Rajshahi-Nadia.—No. 3387A.—30th March 1937.—Babu Subodh Chandra Basu, Deputy Magistrate and Deputy Collector, Nator, Rajshahi, is transferred to the headquarters station of the Nadia district.

Dinajpur - Rajshahi. — No. 3391A.—30th March 1937.—Babu Narendra Mohan Mazumdar, Deputy Magistrate and Deputy Collector, Dinajpur, is appointed to have charge of the Nator subdivision of the Rajshahi district.

Nadia - 24-Parganas. — No. 3400A.—31st March 1937.—Mr. Nirmal Shankar Sen, M.B.E., Deputy Magistrate and Deputy Collector, Nadia, is transferred to the headquarters station of the 24-Parganas district.

24-Parganas - Nadia. — No. 3403A.—31st March 1937.—Babu Prafulla Chandra Das Gupta, Deputy Magistrate and Deputy Collector, 24-Parganas, is transferred to the headquarters station of the Nadia district.

POLICE.

Dacca.—No. 3325A.—27th March 1937.—Mr. F. W. Kidd, I.P., Superintendent of Police, Dacca, is appointed to act temporarily, in addition to his own duties, as Deputy Inspector-General of Police, Dacca Range

Bakarganj.—No. 3474A.—31st March 1937.—Mr. W. G. Thrupp, I.P., Superintendent of Police, on leave, is appointed to be Superintendent of Police, Bakarganj.

Calcutta.—No. 3477A.—31st March 1937.—Mr. D. A. Brayden, I.P., Special Superintendent of Police, Intelligence Branch, is appointed to be Assistant Inspector-General of Police, Bengal.

Dinajpur - Calcutta. — No. 3479A.—31st March 1937.—Mr. E Springfield, I.P., Superintendent of Police, Dinajpur, is appointed to be Special Superintendent of Police, Intelligence Branch.

Birbhum - Dinajpur. — No. 3482A.—31st March 1937.—Khan Bahadur Abdur Rashid Khan, officiating Superintendent of Police, Birbhum, is appointed to act, until further orders, as Superintendent of Police, Dinajpur.

Mymensingh - Birbhum. — No. 3485A,—31st March 1937.—Khan Bahadur Habibur Rahman, I.P., Additional Superintendent of Police, Mymensingh, is appointed to be Superintendent of Police, Birbhum.

Dacca - Mymensingh. — No. 3488A.—31st March 1937.—Mr. A Z. Obaidullah, I.P., Assistant Superintendent of Police, Munshiganj, Dacca, is appointed to act, until further orders, as Additional Superintendent of Police, Mymensingh.

Calcutta-Tippera.—No. 3491A.—31st March 1937.—Mr. M. A. Abdullah, I.P., Special Assistant, Intelligence Branch, is appointed to act, until further orders, as Additional Superintendent of Police, Tippera.

Dacca - Calcutta.—No. 3494A.—31st March 1937.—Mr. J. W. Purdy, I.P., Assistant Superintendent of Police, Narayanganj, Dacca, is appointed to be Special Assistant, Intelligence Branch.

Leave.

GENERAL.

Faridpur.—No. 3307A.—25th March 1937.—Mr. Kunja Behari Roy, District and Sessions Judge, Faridpur, is allowed leave on average pay for one day, viz., the 25th March 1937, under rule 81 (*b*) (*ii*) of the Fundamental Rules.

Bankura.—No. 3321A.—27th March 1937.—Babu Bijay Kumar Datta Gupta, Sub-Deputy Collector, Bankura, is allowed leave on average pay up to the 9th August 1937, under rule 81 (*b*) (*ii*) of the Fundamental Rules, with effect from the 10th April 1937.

Jessore.—No. 3397A.—30th March 1937.—Babu Jyotish Chandra Chatarji, Deputy Magistrate and Deputy Collector, Jessore, is allowed leave on average pay for four months, under rule 81 (*b*) (*ii*) of the Fundamental Rules, with effect from the 2nd April 1937 or any subsequent date on which he may be relieved.

No. 3456A. — 31st March 1937. — Babu Bimala Kanta Sarkar, Sub-Deputy Collector, is allowed leave on average pay for one month and ten days, under the proviso to rule 81 (*b*) (*ii*) of the Fundamental Rules, in extension of the leave granted to him under the orders of the 25th June 1936.

Dacca.—No. 3458A.—31st March 1937.—Babu Sachindra Nath Das Gupta, Deputy Magistrate and Deputy Collector, on probation, Dacca, is allowed earned leave for one day, viz., the 25th March 1937, under rule 10 of the Bengal Services (Revision of Leave) Rules, 1934.

No. 3472A. — 31st March 1937. — Babu Basanta Kumar Das, Deputy Magistrate and Deputy Collector, is allowed leave on average pay for twenty-three days, under rule 81 (*b*) (*ii*) of the Fundamental Rules, in extension of the leave granted to him under the orders of the 14th December 1936.

No. 3505A.—31st March 1937.—Mr. K. C. Chunder, I.C.S., District and Sessions Judge, Assam Valley Districts, is allowed leave on average pay for eight months, under rule 81 (*b*) (*i*) of the Fundamental Rules, with effect from the 21st March 1937.

POLICE.

Dacca.—No. 3360A.—30th March 1937.—Mr. W. J. Cottam, I.P., officiating Additional Superintendent of Police, Dacca, is allowed leave for nine months, viz., leave on average pay for five months, under rule 81 (*b*) (*i*) of the Fundamental Rules, with effect from the 26th April 1937, or any subsequent date on which he may be relieved, and leave on half average pay for the remaining period, under rule 81 (*d*) of those Rules.

Calcutta.—No. 3461A —31st March 1937.—Mr. C. Weale, I.P., Assistant Inspector-General of Police, Bengal, is allowed leave on average pay up to the 8th October 1937, under rule 81 (*b*) (*i*) of the Fundamental Rules, with effect from the 1st May 1937 or any subsequent date on which he may be relieved.

Tippera.—No. 3464A.—31st March 1937.—Mr. R. C. Pollard, I.P., officiating Additional Superintendent of Police, Tippera, is allowed leave on average pay for eight months, under rule 81 (*b*) (*i*) of the Fundamental Rules, with effect from the 1st May 1937 or any subsequent date on which he may be relieved.

H. J. TWYNAM,

Chief Secy. to the Govt. of Bengal (offg.).

NOTIFICATION.

No. 3518A.—31st March 1937.—In exercise of the powers conferred by rule 18 of the Civil Services (Classification, Control and Appeal) Rules, the Governor in Council is pleased to declare that the following posts are included in the Bengal General Service:—

(1) One post of Professor of English, Presidency College, Calcutta,

(2) Post of Inspector of Registration Offices, Bengal.

H. J. TWYNAM,

Chief Secy. to the Govt. of Bengal (offg.).

HOME DEPARTMENT.

Appointment.

APPOINTMENTS AND TRANSFERS.

Pabna.—No. 3542A.—1st April 1937.—Maulvi Saadat Husain Chaudhuri, Deputy Magistrate and Deputy Collector, Serajganj, Pabna, held charge of that subdivision from the 26th January 1937 to the 31st January 1937, inclusive.

Pabna.—No. 3544A.—1st April 1937.—Maulvi Altafur Rahman Khan, Deputy Magistrate and Deputy Collector, Serajganj, Pabna, held charge of that subdivision from the 1st February 1937 to the 7th February 1937, inclusive.

Tippera-Chittagong. — No. 3931A. — 2nd April 1937.—Mr. S. K. Dey, I.C.S., Joint Magistrate and Deputy Collector, is posted to the headquarters station of the Chittagong district on relinquishing his present appointment as Additional District and Sessions Judge, Tippera and Chittagong.

Howrah.—No. 3957A.—3rd April 1937.—Mr. S. N. Guha Roy, I.C.S., is appointed temporarily to act as Additional District and Sessions Judge, Hooghly, at Howrah.

Howrah-Midnapore.—No. 3965A.—3rd April 1937.—Mr. S. N. Guha Roy, I.C.S., officiating Additional District and Sessions Judge, Hooghly, at Howrah, is appointed to act, until further orders, as District and Sessions Judge, Midnapore.

LEAVE.

Mymensingh.—No. 3515A.—1st April 1937. Babu Chandra Sekhar Mitra, Deputy Magistrate and Deputy Collector, Netrakona, Mymensingh, is allowed leave on average pay for sixteen days, under rule 81(*b*) (*ii*) of the Fundamental Rules, with effect from the 19th April 1937.

No. 3538A.—1st April 1937.—Mr. L. B. Burrows, C.B.E., is allowed leave, on relinquishing his present appointment as Chairman, Coal Mining Committee, from the 20th April 1937 or any subsequent date up to the 16th June 1937, inclusive, viz., leave on average pay for one month and twenty-one days (or the amount due on the date of relief), under rule 81(*b*) (*ii*) of the Fundamental Rules, and leave on half average pay for the remaining period, under rule 81(*d*) of those Rules.

Pabna.—No. 3540A.—1st April 1937.—Mr. H. S. M. Ishaque, I.C.S., Joint Magistrate and Deputy Collector, Serajganj, Pabna, was allowed leave on average pay, under rule 81(*b*) (*ii*) of the Fundamental Rules, from the 26th January 1937 to the 7th February 1937, inclusive.

Bankura.—No. 3563A.—1st April 1937.—Mr. H. C. Gupta, I.C.S., Joint Magistrate and Deputy Collector, Bankura, is allowed leave on average pay for five days, under rule 81(*b*) (*ii*) of the Fundamental Rules, with effect from the 30th March 1937.

Calcutta.—No. 3982A.—5th April 1937.—In modification of the orders of the 5th March 1937, Babu Shyamananda Banarji, Deputy Magistrate and Deputy Collector, on probation, employed as Additional Presidency Magistrate, Calcutta, is allowed leave on average pay for two months, under rule 81 (*b*) (*ii*) of the Fundamental Rules, with effect from the 1st March 1937.

Chittagong.—No. 3992A.—5th April 1937.—In modification of the orders of the 12th March 1937, Mr. T. A. Menon, I.C.S., Assistant Magistrate and Collector, Chittagong, was allowed leave not due on half average pay, under rule 81 (*c*) (*ii*) of the Fundamental Rules, from the 11th January 1937 to the 24th January 1937, inclusive.

RESIGNATION.

No. 3970A.—3rd April 1937.—Mr. F. W. Robertson, C.I.E., has been permitted to resign His Majesty's Indian Civil Service with effect from the 31st March 1937.

CONFIRMATION.

No. 3559A.—1st April 1937.—Mr. A. J. Dash, I.C.S., is appointed substantively to be a Commissioner of a Division, with effect from the 31st March 1937, *vice* Mr. F. W. Robertson, C.I.E., I.C.S., retired.

NOTIFICATIONS.

Calcutta.—No. 3923A.—1st April 1937.—Mr. D. Bhattacharji, I.P., officiating Deputy Commissioner of Police, Calcutta, is appointed, under the provisions of section 22 of Act V of 1898, to act as a Justice of the Peace within the limits of the town of Calcutta.

No. 3985A.—5th April 1937.—The candidates named below are appointed on probation to the Bengal Junior Civil Service:—

(1) Maulvi Saiyid Muhammad Hammad Ali, M.A., son of Maulvi Saiyid Meher Ali.

(2) Maulvi Saiyid Ahmad Chaudhuri, M.A., son of Maulvi Nazimuddin Chaudhuri.

2. They will be on probation for a period of two years during which they will be required to undergo the prescribed training and to pass completely the Departmental Examinations. Their confirmation will depend on their passing the Departmental Examination by the higher standard and on their general fitness.

No. 3989A.—5th April 1937.—So much of the orders contained in notification No. 17911-A., dated the 18th December 1936, as relates to the appointment of Maulvi Muhammad Shamsul Hoque in the Bengal Junior Civil Service, is cancelled.

G. P. HOGG,

Secy. to the Govt. of Bengal.

Constitution and Elections.

NOTIFICATIONS.

No. 8790A.R.—5th April 1937.—In exercise of the power conferred by sub-section (*4*) of section 65 of the Government of India Act, 1935, the Governor is pleased to determine that until provision in that behalf is made by Act of the Provincial Legislature there shall be paid to the Speaker and the Deputy Speaker of the Bengal Legislative Assembly the following salaries (inclusive of any daily allowance admissible under section 72 of the said Government of India Act), namely:—

Speaker—Rs. 2,000 per month.

Deputy Speaker—Rs. 3,000 per annum.

No. 8792A.R.—5th April 1937.—In exercise of the power conferred by sub-section (*4*) of section 65 of the Government of India Act, 1935, read with sub-section (*5*) of that section, the Governor is pleased to determine that until provision in that behalf is made by Act of the Provincial Legislature there shall be paid to the President and the Deputy President of the Bengal Legislative Council the following salaries (inclusive of any daily allowance admissible under section 72 of the said Government of India Act), namely:—

President—Rs. 1,500 per month.

Deputy President—Rs. 2,000 per annum.

No. 8658A.R.—5th April 1937.—In exercise of the power conferred by paragraph 1 of notification No 10145A.R., dated the 2nd December 1936, issued under paragraph 18 of the Fifth Schedule to the Government of India Act, 1935, the Governor is pleased to appoint Mr. K. Ali Afzal, Returning Officer for the election by the members of the Bengal Legislative Assembly to fill seats in the Bengal Legislative Council, to determine by lot the division of the members elected by the European constituency of the Bengal Legislative Council into three groups referred to in the said paragraph, at 11 a.m. on the 8th April 1937, at the Council House, in the presence of any of the members concerned or their agents who may attend.

No 8660A.R.—5th April 1937.—Whereas of the seats in the Bengal Legislative Council which have been filled by persons elected by members of the Bengal Legislative Assembly those held by persons belonging to the General Community as well as those held by persons belonging to the Muhammadan Community cannot be divided into groups which are an exact multiple of three;

Now, therefore, in exercise of the power conferred by paragraph 2 of notification No. 10145A.R., dated the 2nd December 1936, issued under paragraph 18 of the Fifth Schedule to the Government of India Act, 1935, the Governor is pleased to divide the total number of seats specified in column 2 of the table below held respectively by the communities mentioned opposite each such number in column 1 of the said table into three groups, viz., seats to be held for nine years, seats to be held for six years, and seats to be held for three years respectively specified in columns 3, 4 and 5 of the said table opposite each such total number:—

Table.

Communities.	Total. number of seats filled.	Number of seats to be for—		
		9 years.	6 years.	3 years.
1	2	3	4	5
General ..	14	4	5	5
Muhammadan ..	10	4	3	3

No. 8663A.R.—5th April 1937.—In exercise of the power conferred by paragraph 4 of notification No. 10145A.R., dated the 2nd December 1936, issued under paragraph 18 of the Fifth Schedule to the Government of India Act, 1935, the Governor is pleased to appoint Mr K. Ali Afzal, Returning Officer for the election by the members of the Bengal Legislative Assembly, to fill seats in the Bengal Legislative Council, to determine by lot the division of the members of the Bengal Legislative Council elected by the members of the Bengal Legislative Assembly into three groups referred to in paragraph 2 of the said notification, at 11 a m. on the 8th April 1937, at the Council House, in the presence of any of the members concerned or their agents who may attend.

No. 8665A.R.—5th April 1937.—In exercise of the power conferred by paragraph 4 of notification No. 10145A.R., dated the 2nd December 1936, issued under paragraph 18 of the Fifth Schedule to the Government of India Act, 1935, the Governor is pleased to appoint Mr. K. Ali Afzal, Returning Officer for the election by the members of the Bengal Legislative Assembly, to fill seats in the Bengal Legislative Council, to determine by lot, in the case of seats in the Bengal Legislative Council which have been filled by persons who have been chosen by the Governor under clause (*d*) of paragraph 14 of the said Schedule and whose names have been published under notification No. 8375A.R., dated the 1st April 1937, the order of retirement in those seats referred to in paragraph 3 of the said notification, at 11 a.m. on the 8th April 1937, at the Council House, in the presence of any of the members concerned or their agents who may attend.

No. 8771A.R.—5th April 1937.—In exercise of the powers conferred by the proviso to sub-section (4) of section 71 of the Government of India Act, 1935, the Governor of Bengal is pleased to make the following rules for regulating the attendance before committees of either chamber of the Legislature of Bengal of persons who are or have been in the service of the Crown in India, and for safeguarding confidential matter from disclosure:—

1. These rules may be called the Bengal Legislature Committees (Evidence of Officials) Rules.

2. In these rules, unless there is anything repugnant in the subject or context,—

(a) "Legislature" means the Legislature of Bengal,

(b) "committee" means a committee of either chamber of the Legislature,

(c) "official" means a person who is or has been in the service of the Crown in India.

3. The Governor may, by general or special order, empower any official to attend a meeting of a committee for the purpose of giving evidence relating to his official duties and/or producing any official document or class of official documents which may be necessary for the proper elucidation of the matter on which the official is required to give evidence; and no official shall attend a meeting of a committee for the purpose of giving evidence or of producing official documents unless he has been so empowered.

4. A requisition issued by the Chairman of a committee to any official to attend a meeting of the committee for the purpose of giving evidence relating to his official duties or producing official documents shall be addressed to the Secretary to Government in the Home Department and shall state with as much precision as may be possible the matter or matters on which the evidence of the official is required and what, if any, documents he is required to produce.

5. The official, if generally empowered in this behalf or after being specially empowered under rule 3, shall appear before the committee, and shall take with him all documents which are relevant to the matter or matters on which his evidence is required, and which he has been authorised to produce by general or special order under rule 3. If, notwithstanding such authorisation, he considers that any evidence which he is asked to give, or any document which he is required to produce, should, in the public interest, not be given or produced, he shall make at the appropriate moment a statement to that effect before the committee, and, if he has not already received orders on the matter, he shall refer it, through proper official channels, to the Minister in charge of the department to which the case belongs, who shall refer it for the orders of the Governor.

6. Nothing contained in any Act passed by the Legislature which provides for the punishment on conviction before a court of persons who refuse to give evidence or produce documents before a committee shall be deemed to subject an official to punishment on the ground that he has failed to give evidence relating to his official duties, or to produce an official document before a committee or that he has failed to appear before a committee to give such evidence or produce such documents.

7. In the discharge of his functions under these rules the Governor shall exercise his individual judgment.

8. These rules shall be subject to the provisions of any rule made under section 58 of the Government of India Act, 1935.

Appointment.

NOTIFICATIONS.

No. 4019A.—6th April 1937.—It is hereby notified for general information that the first half-yearly departmental examination in 1937 of Assistant Magistrates, probationary Munsifs, Deputy and Sub-Deputy Collectors in the regulation and non-regulation districts, of Cantonment Magistrates and of officers of the Police, Medical, Forest, Commerce, Public Works, Irrigation, Excise, Education, Imperial Customs, Agriculture, Industries and Civil Veterinary Departments and Inspectors of Mines, will be held on Monday, the 3rd May 1937, and the three following days, viz., 4th, 5th and 6th May 1937.

No. 4020A.—6th April 1937.—In continuation of notification No. 4019A., dated the 6th April 1937, the following programme for the examination of Civil, Judicial, Police, Public Works, Irrigation, Forest, Education, Imperial Customs and Agricultural officers is published for their information, no officers of the remaining categories specified in notification No. 4019A., dated the 6th April 1937, having offered themselves for examination.

The examination will be held at the Town Hall (first floor), Calcutta.

The time fixed for the *viva voce* examinations will be communicated to the candidates individually:—

Programme of examination.

Monday, the 3rd May 1937—

Viva voce (Bengali and Hindustani), 9-30 a.m. to 1-15 p.m. and 2-30 p.m. to 5 p.m.

Lower Standard—Bengali—

Translation from English (two hours), 11 a.m. to 1 p.m.

Dictation (half an hour), 1 p.m. to 1-30 p.m.

Translation from vernacular (two hours), 2-30 p.m. to 4-30 p.m.

Tuesday, the 4th May 1937—

Vice voce (Bengali and Hindustani), 9-30 a.m. to 1-15 p.m. and 2-30 p.m. to 5 p.m.

Higher Standard—Bengali—

Translation from English (two hours), 11 a.m. to 1 p.m.

Dictation (half an hour), 1 p.m. to 1-30 p.m.

Translation from vernacular (two hours), 2-30 p.m. to 4-30 p.m.

Wednesday, the 5th May 1937—

10-15 a.m.—

Law, Part I (Criminal Law and Law of Evidence), without books (three hours).

Criminal Law for police officers, without books (three hours).

Law, Paper I (Revenue Law), for judicial officers, without books (three hours).

Canal Law, Part A, without books (three hours).

2-15 p.m.—

Law, Part II (Revenue Law), without books (three hours).

Law, Paper II (General Law), for judicial officers, with books (three hours).

Criminal Law for police officers, with books (three hours).

Canal Law, Part B, without books (three hours).

Accounts for agricultural officers, with books (three hours).

Thursday, the 6th May 1937—

10-15 a.m.—

Law, Part III (General Law), with books (three hours).

Law, Paper III, for judicial officers with books (three hours).

Accounts for police officers, with books (three hours).

Departmental Rules and Orders for agricultural officers, without books (three hours).

Procedure and Accounts for Forest officers with books (three hours).

2-15 p.m.—

Accounts for civil officers, with and without books (three hours).

G. P. HOGG,

Secy. to the Govt. of Bengal.

Political.

NOTIFICATIONS.

No. 4697P.—5th April 1937.—In exercise of the powers conferred by sub-section (*2*) of section 28 of the Auxiliary Force Act, 1920, the Governor is pleased to appoint the following persons to be members of the Advisory Committee for the Calcutta Military area. The members will hold office for the year ending the 31st March 1938:—

(1) Mr. H. J. Twynam, C.I.E., I.C.S.

(2) The Adjutant, Calcutta Light Horse.

(3) Mr. H. G. Cooper, M.C., D.C.M.

(4) Mr. E. B. Pratt.

(5) Mr. I. P. F. Campbell.

(6) Mr. O. K. Martin.

(7) Major S. E. Tee, I.A. (Retired).

No. 4698P.—5th April 1937.—In exercise of the powers conferred by sub-section (*1*) of section 28 of the Auxiliary Force Act, 1920, the Governor is pleased to appoint the following persons to be members of the Advisory Committee for the Jalpaiguri Military area. The members will hold office for the year ending the 31st March 1938:—

(1) Mr. L. R. Fawcus, I.C.S., Commissioner, Rajshahi Division.

(2) The Adjutant, Northern Bengal Mounted Rifles.

(3) Mr. F. M. Graham.

(4) Major M. Irving.

(5) Lieutenant-Colonel G. A. Webb, V.D.

No. 4699P.—5th April 1937.—In exercise of the powers conferred by sub-section (*1*) of section 28 of the Auxiliary Force Act, 1920, the Governor is pleased to appoint the following persons to be members of the Advisory Committee for the Dacca Military area. The members will hold office for the year ending the 31st March 1938:—

(1) Mr. H. R. Wilkinson, C.I.E., I.C.S., Commissioner, Dacca Division.

(2) The Adjutant, Eastern Bengal Company.

(3) Mr. G. E. Cuffe.

(4) Lieutenant-Colonel K. F. G. Stronach.

G. P. HOGG,

Secy. to the Govt. of Bengal.

Political (Special).

NOTIFICATION.

No. 13213X.—2nd April 1937.—Rai Baidyanath Chatarji Bahadur, Assistant Commandant, Hijli Detention Camp, is appointed to act as Commandant in addition to his duties, with effect from the 1st April 1937, until further orders.

J. R. BLAIR,

Addl. Secy. to the Govt. of Bengal.

Jails.

NOTIFICATION.

No. 982P.J.—5th April 1937.—Rai Baidyanath Chatarji Bahadur, Commandant, Hijli Detention Camp, is appointed to act, in addition to his own duties, as Superintendent of the Additional Special Jail, Hijli, with effect from the 1st April 1937, until further orders.

J. R. BLAIR,

Addl. Secy. to the Govt. of Bengal.

Police.

NOTIFICATION.

Mymensingh. — No. 1445Pl. — 1st April 1937.—In exercise of the power conferred by section 4 (*1*) (*s*) of the Code of Criminal Procedure (Act V of 1898), and in continuation of notification No. 10434L.R., dated 5th August 1935, published at page 1525, Part I of the *Calcutta Gazette* of 8th August 1935, in which the mauza "Uttar Joanerchar" has been declared a village under section 3 (*19*) (*b*) of the Bengal Tenancy Act, which formerly formed a part of mauza Joanerchar, jurisdiction list No. 1, and administered by the Dewanganj police-station in the Mymensingh district, and to the boundaries of that area, the Governor is pleased to declare that the village specified in the following schedule shall be included as a village in the aforesaid police-station in the same district:—

Name of village.	General jurisdiction No. of thana Dewanganj.	Remarks
"Uttar Joanerchar."	149 — 1	This area was not surveyed during the Mymensingh Settlement Operation in 1908-09 as the northern boundary with Rangpur district was not then demarcated by pillars.

G. P. HOGG,

Secy. to the Govt. of Bengal.

JUDICIAL DEPARTMENT.

Appointments and Transfers.

24-Parganas - Rangpur.—No. 2570J.—30th March 1937.—Maulvi Shahabuddin Ahmed, munsif of Diamond Harbour, in the district of the 24-Parganas, is appointed to be a munsif in the district of Rangpur, to be ordinarily stationed at Gaibandha.

Noakhali - 24-Parganas. — No. 2573J.—30th March 1937.—Maulvi Sikandar Ali, probationary munsif at Sudharam, in the district of Noakhali, is appointed to be a munsif in the district of the 24-Parganas, to be ordinarily stationed at Diamond Harbour.

Calcutta.—No. 2666J.—30th March 1937.—Mr. Rama Prasad Mukharji, Advocate, High Court, Calcutta, is appointed to act as Assistant Government Pleader of that Court from the 15th to the 30th March 1937, *vice* Sir Syed Mahomed Saadullah, granted leave.

Calcutta.—No. 2672J.—30th March 1937.—Mr. Rama Prasad Mukharji, Advocate, High Court, Calcutta, is appointed to act as Assistant Government Pleader of that Court from the 31st March 1937, *vice* Sir Mahomed Saadullah, resigned, or until further orders.

Leave.

Burdwan. — No. 2480J. — 18th February 1937.—Maulvi Abdul Majid, munsif of Burdwan (Sadar), is allowed earned leave for the period from the 5th to the 25th March 1937, under rule 14 (*a*) of the Bengal Services (Revision of Leave) Rules, 1934.

Tippera.—No. 2481J.—3rd March 1937.—Mr. Saurendra Mohan Banarji, munsif of Chandpur, in the district of Tippera, is allowed earned leave for one day on the 25th March 1937, under rule 14 (*a*) of the Bengal Services (Revision of Leave) Rules, 1934.

Bankura.—No. 2482J.—3rd March 1937.—Maulvi Md. Taleb Ali, munsif of Bankura (Sadar), is allowed leave on average pay, on medical certificate, for three months, under the proviso to rule 81 (*b*) (*ii*) of the Fundamental Rules, with effect from the 2nd February 1937.

Khulna.—No. 2483J.—8th March 1937. Babu Baidya Nath Mukharji, munsif of Satkhira, in the district of Khulna, is allowed leave on average pay for eleven days, under rules 81 (*b*) (*ii*) and 82 (*b*) of the Fundamental Rules, with effect from the 15th March 1937.

Tippera. -No. 2484J.—8th March 1937.—Babu Pankaj Nath Gupta, munsif of Comilla, in the district of Tippera, is allowed leave on average pay for four days, under rules 81 (*b*) (*ii*) and 82 (*b*) of the Fundamental Rules, with effect from the 24th February 1937.

24-Parganas. — No. 2485J. — 8th March 1937.—Maulvi Enayetur Rahman, munsif of Baruipur, in the district of 24-Parganas, is allowed leave on average pay for twenty-one days, under rules 81 (*b*) (*ii*) and 82 (*b*) of the Fundamental Rules, with effect from the 9th February 1937.

Tippera.—No. 2486J.—10th March 1937.—Maulvi Saiyid Tassaduq Hossain, munsif of Comilla, in the district of Tippera, is allowed leave on average pay, on medical certificate, for four months, under the proviso to rule 81 (*b*) (*ii*) of the Fundamental Rules, with effect from the 29th January 1937.

Burdwan.—No. 2487J.—11th March 1937.—Babu Dhirendra Nath Bagchi, munsif of Katwa, in the district of Burdwan, is allowed leave for the period from the 3rd March to the 17th March 1937, viz., leave on average pay for twelve days, under rules 81 (*b*) (*ii*) and 82 (*b*) of the Fundamental Rules and leave on half average pay for the remaining period, under rule 81 (*d*) of those Rules.

Rangpur.—No. 2488J.—11th March 1937—Babu Shib Chandra Datta, munsif of Kurigaon, in the district of Rangpur, is allowed leave on average pay for the period from the 30th March to the 3rd April 1937, under rules 81 (*b*) (*ii*) and 82 (*b*) of the Fundamental Rules.

Nadia. — No. 2489J.—12th March 1937.—Maulvi Md. Akkas Ali Khan, munsif of Krishnagar, in the district of Nadia, is allowed leave on average pay for one day on the 25th March 1937, under rules 81 (*b*) (*ii*) and 82 (*b*) of the Fundamental Rules.

Bakarganj.—No. 2490J.—13th March 1937.—Mr. Bikash Chandra Ghosh, munsif of Patuakhali, in the district of Bakarganj, is allowed leave on average pay for the period from the 22nd March to the 25th March 1937, under rules 81 (*b*) (*ii*) and 82 (*b*) of the Fundamental Rules.

Midnapore.—No. 2491J.—13th March 1937.—Babu Khagesh Chandra Mitra, munsif of Ghatal, in the district of Midnapore, is allowed leave on average pay for one day on the 25th March 1937, under rules 81 (*b*) (*ii*) and 82 (*b*) of the Fundamental Rules.

Murshidabad. — No. 2492J.—13th March 1937.—Babu Nripendra Kumar Ghosh, munsif of Jangipur, in the district of Murshidabad, is allowed leave on average pay for one day on the 25th March 1937, under rules 81 (*b*) (*ii*) and 82 (*b*) of the Fundamental Rules.

Calcutta.—No. 2497J.—25th March 1937.—Mr. Nagendra Nath Gupta, Barrister-at-Law, Municipal Magistrate, Calcutta, is allowed leave on half average pay for one month and ten days from the 3rd May 1937, under Fundamental Rule 81 (*d*).

Calcutta.—No. 2542J.—29th March 1937.—Rai Prabodh Gopal Mukharji Bahadur, Public Prosecutor in the courts of Presidency Magistrates, Calcutta, is allowed leave on average pay for twenty-five days from the 1st March 1937, under rule 10 of the Bengal Services (Revision of Leave) Rules, 1934.

Calcutta.—No. 2663J.—30th March 1937.—Sir Syed Mahomed Saadullah, officiating Assistant Government Pleader, High Court, Calcutta, is granted leave without pay from the 15th March 1937 to the 30th March 1937.

Resignation.

Calcutta.—No. 2669J.—30th March 1937.—The Governor in Council is pleased to accept, with effect from the 31st March 1937, the resignation tendered by Sir Syed Mahomed Saadullah of his appointment as officiating Assistant Government Pleader, High Court, Calcutta.

NOTIFICATIONS.

Murshidabad. — No. 2577J. — 30th March 1937.—In exercise of the power conferred by section 65 of the Bengal Village Self-Government Act, 1919 (Bengal Act V of 1919), the Governor in Council is pleased to appoint the following members of the union boards mentioned below, to be, during their term of office as such members, union benches within the jurisdiction of the union boards of which they are, respectively, members for the purposes of that section:—

Murshidabad district.

Kandi subdivision.

Bharatpur police-station.

Jajan union board.

Babu Kumar Krishna Ghosh.

Babu Aghore Nath Mukharji.

Babu Dhirendra Nath Ghosh.

Salar union board.

Hafej Choudhury Abdul Azim.

Kazi Muhammad Hossain.

Babu Dwijapada Sarkar.

Barwan police-station.

Punchthupi union board.

Babu Subodh Krishna Ghosh Maulick.

Babu Bimalapada Ghosh Hazara.

Munshi Jonab Ali Shaikh.

Kandi police-station.

Gokarna union board.

Babu Tripura Charan Ray

Babu Hemchandra Banarji.

Munshi Haji Shaikh Jaher.

Josohari-Anukha union board.

Babu Satish Chandra Trivedi.

Munshi Sheikh Samsuddin.

Babu Abhoypada Ray.

Murshidabad. — No. 2578J. — 30th March 1937.—In exercise of the power conferred by section 73 of the Bengal Village Self-Government Act, 1919 (Bengal Act V of 1919) the Governor in Council is pleased to appoint the following members of the union boards mentioned below, to be, during their term of office as such members, union courts within the jurisdiction of the union boards of which they are, respectively, members for the purposes of that section:—

Murshidabad district.

Kandi subdivision.

Bharatpur police-station.

Jajan union board.

Babu Kumar Krishna Ghosh.

Babu Aghore Nath Mukharji.

Babu Dhirendra Nath Ghosh.

Salar union board.

Hafej Choudhury Abdul Azim.

Kazi Muhammad Hossain.

Babu Dwija Pada Sarkar.

Barwan police-station.

Punchthupi union board.

Babu Subodh Krishna Ghosh Maulick.

Babu Bimalapada Ghosh Hazara.

Munshi Jonab Ali Shaikh.

Kandi police-station.

Gokarna union board.

Babu Tripura Charan Ray.

Babu Hemchandra Banarji.

Munshi Haji Shaikh Jaher.

Josohari-Anukha union board.

Babu Satish Chandra Trivedi.

Munshi Sheikh Samsuddin.

Babu Abhoypada Ray.

Calcutta.—No. 2595J.—30th March 1937.—Under rule 4 (3) of the rules regarding the management and discipline of the House of Detention in Calcutta published with notification No. 8033J., dated the 12th December 1923, the Governor in Council is pleased to appoint Mrs. M. Barwell to be a member of the Visiting Board for the control and management of the House of Detention at 85, Lower Circular Road, Calcutta, for a period of two years from the 10th April 1937.

24-Parganas. — No. 2598J. — 30th March 1937.—In exercise of the power conferred by section 65 of the Bengal Village Self-Government Act, 1919 (Bengal Act V of 1919), the Governor in Council is pleased to appoint Babu Pramatha Nath Chakrabatti, a member of the Jetia-Majhipara union board within the Bijpore police-station in the Barrackpore subdivision of the district of the 24-Parganas, to be, during his term of office as such member, a member of the union bench within the jurisdiction of the said union board for the purposes of that section, *vice* Babu Kalidas Mukharji, deceased.

24-Parganas. — No. 2599J. — 30th March 1937.—In exercise of the power conferred by section 73 of the Bengal Village Self-Government Act, 1919 (Bengal Act V of 1919), the Governor in Council is pleased to appoint Babu Pramatha Nath Chakrabatti, a member of the Jetia-Majhipara union board within the Bijpore police-station in the Barrackpore subdivision of the district of the 24-Parganas, to be, during his term of office as such member, a member of the union court within the jurisdiction of the said union board for the purposes of that section, *vice* Babu Kalidas Mukharji, deceased.

Faridpur.—No. 2687J.—31st March 1937.—In exercise of the power conferred by section 65 of the Bengal Village Self-Government Act, 1919 (Bengal Act V of 1919), the Governor in Council is pleased to appoint Babu Digendra Mohan Ghosh, a member of the Gatti union board within the Nagarkanda police-station in the Sadar subdivision of the Faridpur district, to be, during his term of office as such member, a member of the union bench within the jurisdiction of the said union board for the purposes of that section, *vice* Babu Ramani Mohan Ghosh, deceased.

Faridpur.—No. 2688J.—31st March 1937.—In exercise of the power conferred by section 73 of the Bengal Village Self-Government Act, 1919 (Bengal Act V of 1919), the Governor in Council is pleased to appoint Babu Digendra Mohan Ghosh, a member of the Gatti union board within the Nagarkanda police-station in the Sadar subdivision of the Faridpur district, to be, during his term of office as such member, a member of the union court within the jurisdiction of the said union board for the purposes of that section, *vice* Babu Ramani Mohan Ghosh, deceased.

No. 2784J. -31st March 1937.—In exercise of the power conferred by sub-section (*1*) of section 35 of the Court-fees Act, 1870 (VII of 1870) as amended by the Court-fees (Bengal Amendment) Act, 1935 (Bengal Act VII of 1935), the Governor in Council is pleased to reduce in the whole of Bengal the fee of twelve annas, chargeable under paragraph 2 of article 1(*b*) of Schedule II to the said Act in respect of applications for information when presented to a civil, criminal or revenue Court, to four annas.

Mymensingh. — No. 2832J. — 31st March 1937.—In exercise of the power conferred by section 65 of the Bengal Village Self-Government Act, 1919 (Bengal Act V of 1919), the Governor in Council is pleased to appoint the following members of the Ganda union board within the Kendua police-station in the Netrakona subdivision of the Mymensingh district, to be, during their term of office as such members, a union bench within the jurisdiction of the said union board for the purposes of that section:—

Maulvi Abdus Sobhan Talukdar.

Maulvi Abbas Ali Bhuyan.

Maulvi Syed Ali Bhuyan.

Babu Jatindra Nath Biswas.

N. G. A. EDGLEY,
Secy. to the Govt. of Bengal.

JUDICIAL AND LEGISLATIVE DEPARTMENTS.

Judicial.

NOTIFICATIONS.

24-Parganas.—No. 2859J.—1st April 1937.—The services of Babu Jyotirindra Mohan Bir, munsif of Barasat, in the district of the 24-Parganas, are placed at the disposal of the Government of Assam.

Dacca.—No. 2860J.—1st April 1937.—Babu Jogesh Chandra Chatarji, munsif of Sunamganj, in the district of Sylhet, is appointed to act, until further orders, as Subordinate Judge of Dacca, *vice* Maulvi Saiyidur Rahman.

Mymensingh.—No. 2864J.—1st April 1937.—In exercise of the power conferred by sub-section (*1*) of section 13 of the Bengal, Agra and Assam Civil Courts Act, 1887 (XII of 1887), the Governor is pleased to declare that the village in the following schedule shall be included within the local limits of the Sherpur munsifi in the district of Mymensingh:—

Schedule.

Name of village.	General jurisdiction number of thana Dewanganj.
Uttar Joanorchar ..	$\frac{149}{1}$

Jessore.—No. 2902J.—1st April 1937.—In exercise of the powers conferred by sections 14 and 15 and the proviso to section 357 of the Code of Criminal Procedure, 1898 (Act V of 1898), the Governor is pleased—

(*a*) to confer upon Babu Satyendra Nath Ghosh the powers of a Magistrate of the second class, in the district of Jessore, for a period of three years from the 7th April 1937, in respect to such cases as may be made over to him within the limits of the Sadar subdivision of the said district,

(*b*) to direct that he shall, in addition to sitting singly, sit as a member of the Sadar bench in the said district, and

(*c*) to direct him to take down evidence in the English language.

Dinajpur.—No. 2979J.—3rd April 1937. — In exercise of the powers conferred by sections 14 and 15 and the proviso to section 357 of the Code of Criminal Procedure, 1898 (Act V of 1898), the Governor is pleased—

(*a*) to confer upon Babu Mohit Nath Chaudhuri the powers of a Magistrate of the second class, in the district of Dinajpur, for a period of three years from the 30th April 1937, in respect to such cases as may be made over to him within the limits of the Balurghat subdivision of the said district.

(*b*) to direct that he shall, in addition to sitting signly, sit as a member of the Balurghat bench in the said district, and

(*c*) to direct him to take down evidence in the English language.

Howrah.—No. 2981J. — 3rd April 1937. — In exercise of the powers conferred by sections 14 and 15 and the proviso to section 357 of the Code of Criminal Procedure, 1898 (Act V of 1898), the Governor is pleased—

(*a*) to confer upon Babu Phanindra Nath Mukharji the powers of a Magistrate of the third class, in the district of Howrah, for a period of three years from the 28th March 1937,

(*b*) to direct him to sit as a member of the Bally bench in the said district, and

(*c*) to direct him to take down evidence in the English language.

Howrah.—No. 2983J. — 3rd April 1937. — In exercise of the powers conferred by sections 14 and 15 and the proviso to section 357 of the Code of Criminal Procedure, 1898 (Act V of 1898) the Governor is pleased—

(*a*) to confer upon Babu Rajendra Nath Set the powers of a Magistrate of the third class, in the district of Howrah, for a period of three years from the 22nd April 1937,

(*b*) to direct him to sit as a member of the Bally bench in the said district, and

(*c*) to direct him to take down evidence in the English language.

Jessore-Khulna.—No. 2985J. — 3rd April 1937. — Babu Sudhir Ranjan Ghosh, probationary munsif at Jessore (Sadar), is appointed to be a munsif in the district of Khulna, to be ordinarily stationed at Satkhira, during the absence, on leave, of Babu Baidya Nath Mukharji, or until further orders.

Tippera.—No. 2995J. — 3rd April 1937. — The services of Maulvi Md. Enayet Pir, probationary munsif at Comilla, in the district of Tippera, are placed at the disposal of the Government of Assam.

Nadia.—No. 3030J.—3rd April 1937. — In exercise of the powers conferred by sections 14 and 15 and the proviso to section 357 of the Code of Criminal Procedure, 1898 (Act V of 1898), the Governor is pleased—

(*a*) to confer upon Maulvi Shamsul Huq the powers of a Magistrate of the second class, in the district of Nadia, for a period of three years from the 26th March 1937, in respect to such cases as may be made over to him within the limits of the Kushtia subdivision of the said district,

(*b*) to direct that he shall, in addition to sitting singly, sit as a member of the Kushtia bench in the said district, and

(*c*) to direct him to take down evidence in the English language.

Dinajpur.—No. 3032J.—3rd April 1937. — In exercise of the powers conferred by section 14 of the Code of Criminal Procedure, 1898 (Act V of 1898), the Governor is pleased to confer upon Maulvi Mohammad Amirulla, an Honorary Magistrate of the Thakurgaon bench, the powers of a Magistrate of the second class, in the district of Dinajpur, for the period during which he has been directed to sit as a member of the said bench in respect to cases brought before the said bench, within the limits of the jurisdiction of the said bench.

Calcutta. No. 2892J. —1st April 1937.— The Official Assignee, Calcutta, is hereby authorised to operate on the unclaimed Dividend Account and unclaimed Dividend Revenue Account in the Imperial Bank from the 15th March 1937 to the 4th April 1937.

Calcutta.—No. 2894J. — 1st April 1937.— In exercise of the powers conferred by sections 81B to 84A inclusive and section 112A of the Presidency Towns Insolvency Act, as amended by the Presidency Towns Insolvency (Bengal Amendment) Act, 1936, the Local Government directs that, *until further notice*, the following registers, etc., should be maintained by the Official Assignee:—

(*1*) All existing registers, etc., including those relating to the establishment, but excluding the Cheque Certificate Book and the Cheque Register Book, which will cease to be maintained;

(*2*) An "Investment Register No. 1", showing—

(*a*) details of all investments of the excess cash balance in the "Account of the Official Assignee of Calcutta" with the Reserve Bank of India;

(*b*) details of the interests, dividends and proceeds of such investments;

(*c*) the half-yearly crediting of such interests, dividends and proceeds to Provincial Revenues (rules 7 and 8);

(*3*) An "Investment Register No. 2", showing details of the investments (and interests, dividends and proceeds of such investments) on account of insolvent estates, the assests of which have been directed by a Committee of Inspection to be invested, pending further realization and pending declaration of dividends by the Official Assignee (rule 8);

(*4*) An "Investment Sales Register" showing details of realized profit or actual loss resulting from the sale of the investments and securities shown in "Investment Register No. 1" (rules 9 and 10);

(*5*) An "Advance Register" and "Advance Ledger" as at present maintained, but showing in addition the extent of recoupment from the Local Government as contemplated by sections 82A and 82B of the amended Act, and also details of refunds to the Local Government as contemplated by section 82C of the Act (rules 11 and 12);

(6) A "Commission Ledger" as at present maintained, but showing in addition the pay and pension charges of the Official Assignee and the amount of net bonus to which he may be entitled after deduction of these charges (rule 13);

(7) A "Lapsed Dividend Register" as required by rule 14.

Birbhum.—No. 2976J.—3rd April 1937.—In exercise of the power conferred by section 65 of the Bengal Village Self-Government Act, 1919 (Bengal Act V of 1919), the Governor is pleased to appoint Babu Jagabandhu Banarji, a member of the Kurumgram union board within the Nalhati police-station in the Rampurhat subdivision of the Birbhum district, to be, during his term of office as such member, a member of the union bench within the jurisdiction of the said union board for the purposes of that section, *vice* Babu Jatindra Nath Ghoshal, deceased.

Birbhum.—No. 2977J.—3rd April 1937.—In exercise of the power conferred by section 73 of the Bengal Village Self-Government Act, 1919 (Bengal Act V of 1919), the Governor is pleased to appoint Babu Jagabandhu Banarji, a member of the Kurumgram union board within the Nalhati police-station in the Rampurhat subdivision of the Birbhum district, to be, during his term of office as such member, a member of the union court within the jurisdiction of the said union board for the purposes of that section, *vice* Babu Jatindra Nath Ghoshal, deceased.

Jalpaiguri.—No. 2997J.—3rd April 1937.—In exercise of the power conferred by section 65 of the Bengal Village Self-Government Act, 1919 (Bengal Act V of 1919), the Governor is pleased to appoint the following members of the union boards mentioned below, to be, during their term of office as such members, union benches within the jurisdiction of the union boards of which they are respectively, members, for the purposes of that section:—

Sadar subdivision, Jalpaiguri district.

Mainaguri police-station.

Mainaguri union board.

Babu Rakhal Raj Banarji.

Babu Priya Nath Roy Chaudhuri.

Babu Bhusan Chandra Das.

Maulvi Quamaruddin Ahmed.

Maulvi Wajuddin.

Saptibari union board.

Babu Surendra Nath Ray.

Babu Bhabendra Nath Chaudhuri.

Babu Khagendra Nath Saha.

Maulvi Basiruddin Sardar.

Maulvi Amey Mohammad.

Padamati union board.

Maulvi Rahimuddin Ahmed.

Maulvi Mafizuddin Ahmed.

Babu Parbati Charan Ray.

Babu Naba Chandra Ray.

Babu Lakshmi Narayan Ray.

Dharmapur union board.

Babu Guru Charan Deb.

Babu Mahendra Nath Das.

Maulvi Anwarulla Prodhan.

Maulvi Tajammal Hossain

Maulvi Esahaque Ali Sha Prodhan.

Patgram police-station.

Patgram union board.

Babu Priya Nath Goswami.

Dr. Gopal Chandra Pal.

Babu Krishna Kanta Adhikari.

Maulvi Hujuruddin Mia.

Maulvi Aharatullah Prodhan.

Kuchlibari union board.

Maulvi Momtazuddin Prodhan.

Maulvi Shakalu Md. Sarkar.

Babu Mon Mohan Roy Prodhan.

Babu Bharat Chandra Basunia.

Babu Uma Charan Barman.

Baura union board.

Maulvi Ameer Ali Basunia.

Maulvi Nabiuddin Mia.

Babu Prafulla Kumar Bhattacharji.

Babu Bhim Barman.

Dhupguri police-station.

Dhupguri union board.

Maulvi Abdul Karim.

Maulvi Nezaruddin.

Babu Bibhuti Bhusan Mitra.

Babu Hiralal Boyed.

Jalpaiguri.—No. 2998J.—3rd April 1937.—In exercise of the power conferred by section 73 of the Bengal Village Self-Government Act, 1919 (Bengal Act V of 1919), the Governor is pleased to appoint the following members of the union boards mentioned below, to be, during their term of office as such members, union courts within the jurisdiction of the union boards of which they are respectively, members, for the purposes of that section:—

Sadar subdivision, Jalpaiguri district.

Mainaguri police-station.

Mainaguri union board.

Babu Rakhal Raj Banarji.

Babu Priya Nath Roy Chaudhuri.

Babu Bhusan Chandra Das.

Maulvi Quamaruddin Ahmed.

Maulvi Wajuddin.

Saptibari union board.

Babu Surendra Nath Ray.

Babu Bhabendra Nath Chaudhuri.

Babu Khagendra Nath Saha.

Maulvi Basiruddin Sardar.

Maulvi Amey Mohammad.

Padamati union board.

Maulvi Rahimuddin Ahmed.

Maulvi Mafizuddin Ahmed.

Babu Parbati Charan Ray.

Babu Naba Chandra Ray.

Babu Lakshmi Narayan Ray.

Dharmapur union board.

Babu Guru Charan Deb.

Babu Mahendra Nath Das.

Maulvi Anwarulla Prodhan.

Maulvi Tajammal Hossain.

Maulvi Esahaque Ali Sha Prodhan.

Patgram police-station.

Patgram union board.

Babu Priya Nath Goswami.

Dr. Gopal Chandra Pal.

Babu Krishna Kanta Adhikari.

Maulvi Hujuruddin Mia.

Maulvi Aharatullah Prodhan.

Kuchlibari union board.

Maulvi Momtazuddin Prodhan.

Maulvi Shakalu Md. Sarkar.

Babu Mon Mohan Roy Prodhan.

Babu Bharat Chandra Basunia.

Babu Uma Charan Barman.

Baura union board.

Maulvi Ameer Ali Basunia.

Maulvi Nabiuddin Mia.

Babu Prafulla Kumar Bhattacharji.

Babu Bhim Barman.

Dhupguri police-station.

Dhupguri union board.

Maulvi Abdul Karim.

Maulvi Nezaruddin.

Babu Bibhuti Bhusan Mitra.

Babu Hiralal Boyed.

Burdwan.—No. 3001J.—3rd April 1937.—In exercise of the power conferred by section 65 of the Bengal Village Self-Government Act, 1919 (Bengal Act V of 1919), the Governor is pleased to appoint Babu Haripada Mukharji, a member of the Badla union board within the Kalna police-station in the Kalna subdivision of the Burdwan district, to be, during his term of office as such member, a member of the union bench within the jurisdiction of the said union board for the purposes of that section.

Burdwan.—No. 3002J.—3rd April 1937.—In exercise of the power conferred by section 73 of the Bengal Village Self-Government Act, 1919 (Bengal Act V of 1919), the Governor is pleased to appoint Babu Haripada Mukharji, a member of the Badla union board within the Kalna police-station in the Kalna subdivision of the Burdwan district, to be, during his term of office as such member, a member of the union court within the jurisdiction of the said union board for the purposes of that section.

N. G. A. EDGLEY,
Secy. to the Govt. of Bengal.

LOCAL SELF-GOVERNMENT DEPARTMENT.

NOTIFICATIONS.

Minister-in-charge: The Hon'ble Sir Bijoy Prasad Singh Roy, Kt.

24-Parganas. — No. 1704M.—31st March 1937.—In exercise of the power conferred by section 506 of the Bengal Municipal Act, 1932 (Bengal Act XV of 1932), the Government of Bengal (Ministry of Local Self-Government) are pleased to confirm the by-laws framed by the Commissioners of the South Dum Dum Municipality, in the district of 24-Parganas, under section 434 of the said Act and published for information under notification No. 7760M., dated the 9th October 1936.

24-Parganas. — No. 1768M.—31st March 1937.—In exercise of the power conferred by section 58 (2) of the Bengal Municipal Act, 1932 (Bengal Act XV of 1932), the Government of Bengal (Ministry of Local Self-Government) are pleased to appoint Munshi Abdur Rahman to be a Commissioner of the Naihati Municipality, in the district of the 24-Parganas, *vice* Rai Sahib Jogendra Nath Banarji, deceased.

G. S. DUTT,
Secy. to the Govt. of Bengal.

Medical.

Minister-in-charge: The Hon'ble Sir Bijoy Prasad Singh Roy, Kt.

Calcutta. — No. 1257Medl.—30th March 1937.—Lt.-Col. S. A. McSwiney, I.M.S., officiating Professor of Obstetrics, Medical College, Calcutta, is granted leave on half average pay for the period from the 13th to the 20th October 1937, under rule 81 (*d*) of the Fundamental Rules, in extension of the leave already granted to him in notification No. 3649Medl., dated the 12th September 1936.

Calcutta. — No. 1361Medl. — 31st March 1937.—Lt.-Col. T. C. Boyd, I.M.S., Principal, Medical College and Superintendent, Medical College Hospitals, Calcutta, is granted leave, ex-India, for the period from the 8th April 1937 to the 9th June 1937, viz., leave on average pay for one month and eighteen days, and on half average pay for the remaining period, under Fundamental Rules 81(*b*)(*i*) and 81(*d*), respectively.

Calcutta. — No. 1362Medl. — 31st March 1937.—Lt.-Col. F. J. Anderson, I.M.S., Professor of Surgery, Medical College, Calcutta, is appointed to act as the Principal of the Medical College, Calcutta, in addition to his own duties for the period from the 8th April 1937 to the 20th May 1937, *vice* Lt.-Col. T. C. Boyd, I.M.S., granted leave.

Calcutta. — No. 1363Medl. — 31st March 1937.—Lt.-Col. H. E. Murray, I.M.S., when appointed as Professor of Midwifery, Medical College, Calcutta, in place of Lt.-Col. P. F. Gow, I.M.S., will act as the Principal, Medical College, Calcutta, in addition to his own duties for the period from the 21st May to the 9th June 1937, *vice* Lt.-Col. T. C. Boyd, I.M.S. granted leave.

Calcutta. — No. 1364Medl. — 31st March 1937.—Major T. H. Thomas, I.M.S., when appointed to officiate as Professor of Medicine, Medical College, Calcutta, in place of Lt.-Col. E. H. V. Hodge, I.M.S., will act as the Superintendent of the Medical College Hospitals in addition to his own duties during the absence on leave of Lt.-Col. T. C. Boyd, I.M.S., for the period from the 8th April to the 9th June 1937.

NOTIFICATIONS.

Minister-in-charge: The Hon'ble Sir Bijoy Prasad Singh Roy, Kt.

Dinajpur.—No. 1121Medl.—22nd March 1937.—The undermentioned gentlemen have been appointed to be members of the Managing Committee of the Setabganj Homeopathic Charitable Dispensary in the district of Dinajpur:—

Circle Officer, Setabganj, President (*ex-officio*).

President, Mushidhat union board, Vice-President (*ex-officio*).

Maulvi Khorshed Ali Chowdhury, Secretary.

Babu Gangaram Agarwala, Assistant Secretary.

Manager, Setabganj Sugar Mill, Ltd. (*ex-officio*).

Thana Officer, Bochaganj police-station (*ex-officio*).

Babu Jyotish Chandra Ray.

Sanitary Inspector, Bochaganj Public Health Circle (*ex-officio*).

Babu Abinash Chandra Nath, Medical Practitioner.

Kaviraj Abani Mohan Sen.

No. 1260Medl. — 30th March 1937. — In exercise of the powers conferred by section 459A of the Bengal Municipal Act, 1932 (Bengal Act XV of 1932), and clause (*k*) of section 138 of Bengal Local Self-Government Act of 1885 (Bengal Act III of 1885), the Government of Bengal (Ministry of Local Self-Government) are pleased to make the following amendment in the rules for the establishment and management of hospitals and dispensaries under the supervision of the Government of Bengal published under notification No. 138T.Medl., dated the 7th June 1915, as subsequently amended:—

Amendment.

In rule 6 of the said rules, *for* the words "by the civil authorities of the district" *substitute* the words "by the District Magistrate, by the District Judge, by the Subdivisional Magistrate."

Public Health.

NOTIFICATIONS.

Minister-in-charge: The Hon'ble Sir Bijoy Prasad Singh Roy, Kt.

No. 1201P.H. — 30th March 1937. — Mr. B. N. Mazumdar, Executive Engineer, Western Division, Public Health Department, Bengal, is allowed leave on average pay for four months, with effect from the 15th March 1937 or any subsequent date on which he availed himself of the leave, under rule 81(*b*) (*ii*) of the Fundamental Rules.

Dacca.—No. 1202P.H.—30th March 1937.—Rai Sahib S. N. Roy, B.E., A.M. I.E. (Ind.), Assistant Engineer, Dacca City Subdivision, is appointed to act as Executive Engineer, Western Division, *vice* Mr. B. N. Mazumdar, on leave.

24-Parganas-Dacca.—No. 1203P.H. — 30th March 1937.—Babu A. K. Banerji, Assistant Engineer, Bhatpara Sanitary Works Subdivision, is appointed to act as Assistant Engineer, Dacca City Subdivision, *vice* Rai Sahib S. N. Roy.

Tippera. — No. 1265P.H. — 31st March 1937.—In exercise of the power conferred by section 311(*k*) of the Bengal Municipal Act, 1932 (Bengal Act XV of 1932), the Governor of Bengal is pleased to make the following amendment in the rules for the regulation of the supply of filtered water to private houses in the Comilla Municipality, published with notification No. 1250P H., dated the 4th July 1925, as subsequently amended:—

Amendment.

For sub-rule (*2*) of rule 15 *substitute* the following:—

(*2*) For all water in excess of the amount allowed under sub-rule (*1*) such owner or occupier shall be charged quarterly as follows:—

	Per 1,000 gallons.
(*a*) For any excess quantity of water not exceeding one-half of the amount of the allowance prescribed in sub-rule (*1*) ..	Annas eight.
(*b*) For any further excess quantity of water exceeding one-half of the amount of the allowance prescribed in sub-rule (*1*), but not exceeding that amount ..	Annas ten.
(*c*) For any further excess quantity of water exceeding the amount of the allowance prescribed in sub-rule (*1*), but not exceeding twice that amount ..	Annas fourteen.
(*d*) For any further excess quantity of water exceeding twice the amount of the allowance prescribed in sub-rule (*1*) ..	Rupee one and annas four only.

G. S. DUTT,

Secy. to the Govt. of Bengal.

DEPARTMENT OF PUBLIC HEALTH AND LOCAL SELF-GOVERNMENT.

NOTIFICATIONS.

Jessore. — No. 1835L.S.-G. — 2nd April 1937.—Whereas the term of office of the members of the Jessore district board expired on the 14th February 1937 under sub-section (*3*) of section 19A of the Bengal Local Self-Government Act of 1885 (Bengal Act III of 1885):

And whereas the Sadar, Bongaon and Narail local boards in the district of Jessore failed to elect the prescribed proportion of elected members of the said district board within the time prescribed by the proviso to rule 54(*1*) of the election rules framed under section 138 of the said Act:

Now, therefore, in exercise of the power conferred by sub-section (*1*) of section 10 of the said Act, the Governor is pleased to appoint the 17th April 1937 as the date on which another election shall be held by the said local boards to fill the said vacancies.

Notification No. 1674L.S.-G., dated the 27th March 1937, is hereby cancelled.

Calcutta.—No. 1409Medl.—5th April 1937. —Bt.-Col R. N. Chopra, C.I.E., K.H.P., I.M.S., officiating Director and Professor of Pharmacology, School of Tropical Medicine, Calcutta, is granted leave on average pay *ex*-India for one month, with effect from the 15th July 1937, under rules 81(*b*) (*i*) and 82(*b*) of the Fundamental Rules, and is permitted to prefix the summer vacation of the school from the 16th April 1937 to the 14th July 1937 to the leave, under rule 82 (*d*) of the Fundamental Rules.

Calcutta.—No. 1410Medl.—5th April 1937. —Dr. C. Strickland, M.A., M.D., Professor of Entomology, School of Tropical Medicine, Calcutta, is appointed to act as Director of the same institution, *vice* Bt.-Col. R. N. Chopra, I.M.S., granted leave.

Calcutta.—No. 1411Medl.—5th April 1937. —Dr. J. C. Gupta, Assistant Professor of Pharmacology, School of Tropical Medicine, Calcutta, is appointed to act as Professor of Pharmacology of the same institution in addition to his own duties, *vice* Bt.-Col. R. N. Chopra, I.M.S., granted leave.

Mymensingh. -No. 1414Medl.—5th April 1937.—Dr. Prabhas Chandra Banerjee, on the expiry of his post-graduate training, is re-posted to the Tangail Subdivision and Dispensary, *vice* temporary Assistant Surgeon Dr. Bhupesh Chandra Roy.

Calcutta.—No. 1415Medl.—5th April 1937. —Temporary Assistant Surgeon Dr. Bhupesh Chandra Roy, on relief, is placed on supernumerary duty at the Medical College Hospitals, Calcutta, until further orders.

Midnapore.—No. 1416Medl.—5th April 1937.—Dr. Sukumar Bose, on the expiry of his post-graduate training, is re-posted to the Tamluk Subdivision and Dispensary, *vice* temporary Assistant Surgeon Dr. Sachindra Nath Roy.

Calcutta. - No. 1417Medl.—5th April 1937. —Temporary Assistant Surgeon Dr. Sachindra Nath Roy, on relief, is placed on supernumerary duty at the Medical College Hospitals, Calcutta, until further orders.

Jalpaiguri.—No. 1418Medl.—5th April 1937.—Dr. Sachindra Nath Chowdhury, on the expiry of his post-graduate training, is temporarily appointed to act as Teacher of Surgery and Midwifery, Jackson Medical School, Jalpaiguri, *vice* Dr. Gostha Behari Bhaduri.

Hooghly.—No. 1421Medl.—5th April 1937. —Dr. Khagendra Mohan Basu of the Imambara Hospital, Hooghly, is granted leave on average pay for six weeks, under rule 81 (*b*) (*ii*) of the Funadmental Rules, with effect from the 1st April 1937 or any subsequent date on which he is relieved.

Hooghly.—No. 1422Medl.—5th April 1937. —Dr. Mahbubul Ameen, on the completion of his post-graduate training, is posted to the Imambara Hospital, Hooghly, *vice* Dr. K. M. Basu.

Calcutta.—No. 1427Medl.—5th April 1937. —Temporary Assistant Surgeon Dr. K. M. Lutfar Rahman, on relief from the Physiology Department, Medical College, Calcutta, did supernumerary duties at the Carmichael Hospital for Tropical diseases, Calcutta, for the period from the 18th October 1936, to the 30th October, 1936.

2. He was appointed to act as House Physician in the Carmichael Hospital with effect from the 31st October 1936, *vice* Dr. Manindra Priya Talukdar.

3. This department notification No. 4617-Medl., dated the 19th December 1936, is hereby cancelled.

G. S. DUTT,
Secy. to the Govt. of Bengal.

EDUCATION DEPARTMENT.

NOTIFICATIONS.

Minister-in-charge: The Hon'ble Khan Bahadur M. Azizul Haque, C.I.E.

Calcutta. — No. 1564Edn. — 31st March 1937.—In exercise of the powers conferred by rule 40 of the Civil Services (Classification, Control and Appeal) Rules, the Government of Bengal (Ministry of Education) are pleased to abolish the undermentioned post from the cadre of the Bengal General Service, as constituted under notification No. 1665A., dated the 14th February 1936, viz., the post of Vice-Principal, Government School of Art, Calcutta.

Dacca.—No. 1568Edn.—31st March 1937. —Babu Susil Chandra Chakravarty, Professor of Physics, Dacca Intermediate College, acted in the Bengal Senior Educational Service as Principal of the College for the period from the 16th January to the 1st March 1937 (both days inclusive), pending the arrival of Rai Kshitish Chandra Ray Bahadur.

2. This cancels the orders in notification No. 402Edn., dated the 30th January 1937.

Rajshahi. — No. 1571Edn. — 31st March 1937.—Mr. Jiban Mohan Basu, officiating Principal, Rajshahi College, is allowed leave to be spent elsewhere than in India, Ceylon or Nepal on average pay for the period from the 15th August to the 2nd October 1937 (both days inclusive), under the proviso to rule 81 (*b*) (*ii*) of the Fundamental Rules, in combination with the Puja vacation of the College extending from the 3rd October to the 13th November 1937, under rule 82 (*d*) of those Rules.

Miscellaneous.

NOTIFICATIONS.

Minister-in-charge: The Hon'ble Khan Bahadur M. Azizul Haque, C.I.E.

No. 694Mis.—31st March 1937.—In exercise of the power conferred by sub-section (*1*) of section 84 of the Bengal Wakf Act, 1934 (Bengal Act XIII of 1934), the Government of Bengal (Ministry of Education) are pleased to make the following rule regarding the procedure to be followed by the Commissioner in giving opinion, advice or direction to a mutwalli applying for the same under sub-section (*1*) of section 37 of the said Act:—

1. Every application received under sub-section (*1*) of section 37 shall be entered in the register of cases to be maintained by the Commissioner in the form appended hereto, and on the final order being passed on such application, the substance of the same shall be recorded in that register. In a case in which no final order is passed, but the applicant is referred to the Court of the District Judge having local jurisdiction over the place where the wakf property or any part thereof is situated, or to any other Court empowered in this behalf by the Local Government, the fact shall also be recorded in the register.

Register of Cases regarding applications received from the Mutwallis under section 37.

Serial number of the case.	Date of receipt of the application or other communications.	From whom received.	Contents in brief with reference to enrolment No. of the Wakf.	Order in brief.	Remarks.

No. 696Mis.—31st March 1937.—In exercise of the power conferred by sub-section (*1*) of section 84 of the Bengal Wakf Act, 1934 (Bengal Act XIII of 1934), the Government of Bengal (Ministry of Education) are pleased to make the following rules regarding the appointment by the Board of Wakfs in certain cases under section 40 of the said Act of persons to act as mutwallis:—

1. If it appears to the Commissioner that there is no mutwalli, in the case of any wakf, or that a vacancy in the office of the mutwalli has been caused by death, resignation, retirement or removal of the former mutwalli, and a dispute has arisen between two or more rival claimants to the vacancy, and such dispute is likely to affect the interest of the wakf, he may institute an inquiry and report the result thereof to the Board with his recommendation.

2. On receipt of the report and the recommendation from the Commissioner, or on its own motion, the Board may appoint a mutwalli under section 40 of the said Act.

3. If a dispute about the office of mutwalli is subjudice before a Civil Court, and that Court is of opinion that it is necessary to make temporary arrangement for the administration of the wakf during the pendency of the suit, the Court may ask the Board to take action under section 40 of the said Act or to make such other provision under that Act for the administration of the wakf as the Board deems suitable.

24-Parganas-Calcutta.—No. 699Mis.—31st March 1937.—In exercise of the power conferred by the proviso to sub-section (*1*) of section 37 of the Bengal Wakf Act, 1934, the Government of Bengal (Ministry of Education) are pleased to empower the Court of the District Judge, 24-Parganas, to receive petitions from mutwallis in respect of wakf properties situated within the Ordinary Original Civil Jurisdiction of the High Court, Calcutta, for giving opinion, advice or direction in the manner provided in sub-sections (*2*) and (*3*) of that section when such mutwallis are referred by the Commissioner to such Court.

Registration.

NOTIFICATIONS.

Minister-in-charge: The Hon'ble Khan Bahadur M. Azizul Haque, C.I.E.

Mymensingh.—No. 291Regn.—31st March 1937.—Maulvi Saiyid Abu Sayid Muhammad Taifoor, District Sub-Registrar of Mymensingh, is allowed leave on average pay for one day on the 25th March 1937, under rule 81(*b*) (*ii*) of the Fundamental Rules.

Bakarganj.—No. 294Regn.—31st March 1937.—In exercise of the power conferred by section 3 of the Bengal Muhammadan Marriages and Divorces Registration Act, 1876 (Bengal Act I of 1876), the Government of Bengal (Ministry of Education) are pleased to appoint Maulvi Muhammad Saber to be a Muhammadan Registrar within the police-station of Banaripara, in the district of Bakarganj.

Bakarganj.—No. 295Regn.—31st March 1937.—In exercise of the power conferred by section 2 of the Kazis' Act, 1880 (Act XII of 1880), the Government of Bengal (Ministry of Education) are pleased to appoint Maulvi Muhammad Saber to be the Kazi for the celebration of marriages and the performance of other rites and ceremonies within the police-station of Banaripara, in the district of Bakarganj.

T. M. Dow,

Secy. to the Govt. of Bengal (offg.).

Orders by the Inspector-General of Registration, Bengal.

Chittagong.—No. 159.—27th March 1937.—Maulvi Mahbubal Alam, Sub-Registrar of Fatikchari, in the district of Chittagong, is allowed leave on average pay for one month and twenty-nine days, under rule 81 (*b*) (*ii*) of the Fundamental Rules, in extension of the leave granted to him in this department notification No. 7, dated the 5th January 1937.

Faridpur.—No. 160.—27th March 1937.—This department notification No. 82, dated the 18th February 1937, granting leave on average pay for one day on the 17th February 1937, to Babu Mohini Ranjan Bhattacharji, Sub-Registrar of Goalundo at Rajbari, in the district of Faridpur, is cancelled.

Rajshahi-Bakarganj. — No. 161. — 27th March 1937.—Babu Manindra Kumar Maitra, Sub-Registrar attached to the Sadar Registration office at Rajshahi, on relinquishing charge of his officiating appointment as Sub-Registrar of Kaukhali, in the district of Bakarganj, is allowed leave on average pay for one month, under rule 81(*b*) (*ii*) of the Fundamental Rules, with effect from the 18th February 1937.

Rangpur. — No. 162.—30th March 1937.—Maulvi Md. Azfar, Sub-Registrar of Domar, in the district of Rangpur, was on leave on average pay for eighteen days, under rule 81 (*b*) (*ii*) of the Fundamental Rules, in extension of the leave granted to him in this department notification No. 79, dated the 18th February 1937.

This cancels this department notification No. 98, dated the 1st March 1937.

Khulna. — No. 163.—31st March 1937.—Babu Nakuleswar Chakrabatti, Sub-Registrar of Satkhira, in the district of Khulna, is allowed leave on average pay on the 25th March 1937, under rule 81 (*b*) (*ii*) of the Fundamental Rules.

Rangpur.—No. 164.—31st March 1937.—Maulvi Md. Abdur Rezaque, Sub-Registrar of Sundarganj, in the district of Rangpur, is allowed leave on average pay for five days, under rule 81 (*b*) (*ii*) of the Fundamental Rules, with effect from the 9th March 1937.

Noakhali.—No. 165.—31st March 1937.—Maulvi Maniruddin Ahmad, Sub-Registrar of Feni, in the district of Noakhali, is allowed leave on average pay for nine days, under rule 81 (*b*) (*ii*) of the Fundamental Rules, with effect from the 25th March 1937.

Khulna. — No. 166.—31st March 1937.—Babu Probodh Chandra Mitra, Sub-Registrar of Dumuria, in the district of Khulna, is allowed leave on average pay for four months, under rule 81 (*b*) (*ii*) of the Fundamental Rules, with effect from the 1st April 1937, or any subsequent date on which he may be relieved.

24-Parganas - Khulna. — No. 167.—31st March 1937.—Babu Lakshmi Narayan Das, probationary Sub-Registrar, attached to the Sadar Registration office at Alipore, in the district of the 24-Parganas, on leave, is appointed to act as Sub-Registrar of Dumuria, in the district of Khulna, during the absence, on leave, of Babu Probodh Chandra Mitra, Sub-Registrar, or until further orders.

Malda.—No. 168.—31st March 1937.—Babu Nikhil Ranjan Sanyal, probationary Sub-Registrar attached to the Sadar Registration office at Malda, is allowed leave for twenty days, viz., earned leave on average pay for one day, under rule 9 of the Bengal Services (Revision of Leave) Rules, 1934, and leave on private affairs on half average pay, under rule 15 of the same Rules, for the remaining period, with effect from the 31st March 1937.

S. CHATTERJEA,

Inspector-General of Regn., Bengal.

FINANCE DEPARTMENT.

Audit.

NOTIFICATIONS.

No. 3319F.—30th March 1937.—In exercise of the powers conferred by rule 41 of the Civil Services (Classification, Control and Appeal) Rules, the Governor in Council and acting with his Ministers is pleased to make the following amendment to the Bengal Passage Rules, 1927, to regulate the grant of passages by air to officers who are entitled to the benefits of the Passage Rules, namely:—

Rule.

3A. The officer, his wife and any of his children shall, within the amounts under sub-rule (*1*) of rule 3 read with rule 4, be entitled to receive passages by air between a place in India and a place outside Asia, and the said accounts shall be debited with the cost of such passages actually engaged up to the limit in each case prescribed for passages by sea in clause (*a*) of sub-rule (*1*) of rule 3. Payment on account of passages by air shall be made by the Accountant-General, Bengal, to the air-ship companies either direct or through their recognised agents.

No. 3339F.—31st March 1937.—In exercise of the powers conferred by rule 44 of the Civil Services (Classification, Control and Appeal) Rules, the Governor in Council and acting with his Ministers hereby makes the following rules:—

Rules.

1. (*1*) These rules may be called the Bengal Services (Increases to Pensions) Rules, 1937.

(*2*) They shall be deemed to have come into force on the 1st March 1936 and shall, in the case of pensioners other than those in class C in rule 2, remain in force so long only as Government may decide.

2. These rules shall apply to the following classes of pensioners:—

(*i*) *Class A.*—Pensioners in receipt of a superior pension who retired before the introduction of revised rates of pay—

(*a*) in 1919-21, or
(*b*) during the post-war period

on account of the increased cost of living. Those who were on long leave on the date of the introduction of the revised rates of pay and retired on a pension calculated on the old rates shall, for the purposes of this clause, be deemed to have retired before the pay of the establishments in which they were employed was revised.

(*ii*) *Class B.*—Pensioners in receipt of a superior pension who retired after the introduction of the revised rates of pay—

(*a*) in 1919-21, or
(*b*) during the post-war period

on account of the increased cost of living but did not receive the full pensionary benefit of the revision.

(*iii*) *Class C.*—Pensioners in receipt of an inferior pension who retired on or before the 31st March 1936.

(*iv*) *Class D.*—Pensioners in receipt of a pension granted under the rules in Part VI of the Civil Service Regulations.

3. (*1*) The pensions of those in class A in rule 2 shall be raised on the scale shown below:—

Scale.

Pensions not exceeding Rs. 10 a month by Rs. 2.
Pensions exceeding Rs. 10 but not exceeding Rs. 20 a month by Rs. 3.
Pensions exceeding Rs. 20 but not exceeding Rs. 30 a month by Rs. 4.
Pensions exceeding Rs. 30 but not exceeding Rs. 40 a month by Rs. 5.
Pensions exceeding Rs. 40 but below Rs. 45 a month by an amount which will bring the pension up to Rs. 45 a month.

(*2*) The pensions of those in class B in rule 2 shall be raised on the scale given in sub-rule (*1*) reduced by one-sixth for every completed six months of service qualifying for pension from the date of the introduction of the revised rates of pay—

(*a*) in 1919-21, or
(*b*) during the post-war period

on account of the increased cost of living as the case may be.

(*3*) The pensions of those in class C in rule 2, who retired before the introduction of the revised rates of pay—

(*a*) in 1918-21, or
(*b*) during the post-war period

on account of the increased cost of living, as well as of those who retired after the introduction of the revised rates of pay but on pension calculated on the old rates, shall be raised by Rs. 2 a month. In the case of those who retired after the introduction of the revised rates of pay—

(*a*) in 1918-21, or
(*b*) during the post-war period

on account of the increased cost of living, as the case may be, the maximum limit of pension in Article 481(*b*) of the Civil Service Regulations as it stood on the 14th January 1921 shall be enhanced by Rs. 2 a month.

(*4*) The pensions of those in class D in rule 2 shall be enhanced on the scale given in sub-rule (*1*):

Provided that in the case of pensions granted on the new scales laid down in revised Chapter XXXVIII of the Civil Service Regulations promulgated with the Government of India, Finance Department, Resolution No. 429-C.S.R., dated the 15th May 1922, pensioners shall have the option of drawing their pensions at the new rates or at the old rates *plus* the increase thereon permissible under sub-rule (*1*).

4. In cases where a portion of the pension has been commuted the increase shall be calculated on the original amount of the pension before commutation.

5. Re-employed pensioners drawing a pension not exceeding Rs. 10 a month shall be entitled to the increase on the scale laid down in rule 3. In the case of a pensioner who is in receipt of separate pensions from both the Civil and the Military Departments, the said limit of Rs. 10 shall have reference to the total of the combined civil and military pensions.

6. In the case of a pensioner who is in receipt of separate pensions from both the Civil and the Military Departments and is entitled to an increase under these rules, such increase shall be assessed on the total of the combined civil and military pensions, either on the scale laid down in rule 3 or on the military scale, whichever may be the more favourable to him.

7. No part of an increase of pension allowed under these rules shall be taken into account for purposes of commutation of pension.

MEMORANDUM ON THE BENGAL SERVICES (REVISION OF SPECIAL PAY) RULES, 1937.

No. 3238F.—27th March 1937.—In 1931 Government decided that all pays and special pays subject to their rule-making control should be examined with a view to their reduction and, as an *ad interim* measure, passed what are generally known as "the 15 per cent. cut orders." These laid down, with certain exceptions, that all new appointments made after the 21st July 1931 should be made on a provisional basis, and should carry pay (including special pay) at the current rates less 15 per cent. The term "new appointments" covered not merely appointments of new recruits to Government service, but also promotions to higher duties of persons already in Government service.

2. A permanent revision of *pays proper*, superseding the above *ad interim* orders, was promulgated—

(*a*) for permanent posts in the Bengal Services (Revision of Pay) Rules, 1934; and

(*b*) for temporary posts in the Bengal Services (Pay of Temporary Posts) Rules, 1935.

3. A permanent revision of *special pays* completing the supersession of those *ad interim* orders has now been completed, and will be found in the Bengal Services (Revision of Special Pay) Rules, 1937, published in the Finance Department notification No. 3262F., dated the 27th March 1937.

4. The principles adopted in this revision of special pays are much the same as those adopted in the case of the pays proper of permanent posts, for an account of which a reference is invited to Finance Department's "Memorandum on the Bengal Services (Revision of Pay) Rules, 1934, and matters connected therewith"—No. 1999F., dated the 28th March 1934. All special pays of corresponding amounts are subjected to a corresponding cut; the amount of the cut on smaller special pays is smaller than the amount on larger special pays, and a limit (Rs. 10) is adopted below which no special pay is reduced. A slightly different treatment is accorded to special pays on account of "unhealthiness of locality". Those which stood at Rs. 25 or below prior to the 15 per cent. cut orders are restored to that figure, while those which exceeded Rs. 25 are subjected to a flat cut of 15 per cent. as in the 15 per cent. cut orders but subject to a resultant minimum of Rs. 25.

5. There are a few cases in which no "revised rate" was called for, because the "unrevised rate" was in fact a rate already permanently fixed in conformity with the pattern of the general revision. These will be found in Schedule I of the rules.

6. As regards the application of the revised rates to Government servants already in service, the rules provide saving clauses, as did the rules revising pays proper, in favour of those who were in service on the 21st July 1931. A special provision deemed necessary in favour of those classes of Government servants who were exempted from the 15 per cent. cut orders is made in rule 7 (*c*). The Government servants

in question are the Police establishment enrolled under the Police Act, and head warders and warders of all grades (including female warders) in the Jail Department.

7. For the purpose of interpreting the words "in the same line of service" wherever they occur in the rules, reference should be made to the orders which have been issued from time to time "grouping" posts in definition of the term "Outside the ordinary line of a person's service" in the Bengal Services (Revision of Pay) Rules, 1934.

8. For the avoidance of mistakes, it has been arranged with the Accountant-General, Bengal, that he will check in advance all calculations of the first special pay proposed to be drawn under the Bengal Services (Revision of Special Pay) Rules by persons already in service on the 28th February 1937. No such person may therefore draw special pay on the basis of these rules until he has been authorised to do so by the Accountant-General. Pending receipt of the Accountant-General's authorisation, special pay should be drawn at the rate applicable to the month of February 1937. When the Accountant-General's authorisation is received, supplementary bills may be presented for the difference, if any, between the pay actually drawn for service after the 28th February 1937 and the pay authorised for the same period by the Accountant-General. The Accountant-General will shortly issue detailed instructions in the matter.

9. It is requested that departments will inform the Finance Department of any posts carrying special pays prior to the 1st March 1937 which have not been included in either Schedule I or Schedule II of the Bengal Services (Revision of Special Pay) Rules, 1937. It is desired to make the rules exhaustive.

D. GLADDING,
Secy. to the Govt. of Bengal.

NOTIFICATION.

No. 3262F.—27th March 1937.—In exercise of the powers conferred by rules 41 and 44 of the Civil Services (Classification, Control and Appeal) Rules, the Governor in Council and acting with his Ministers hereby makes the following rules in respect of persons subject to his rule-making control:—

Rules.

1. These rules may be called the Bengal Services (Revision of Special Pay) Rules, 1937.

2. With effect from the 1st March 1937, the Bengal Services (*ad interim* Revision of Pay) Rules, 1931 (hereinafter called "the 15 per cent. cut orders"), shall, save as provided in rule 3, cease to apply to special pays.

3. The 15 per cent. cut orders shall continue to apply as a permanent measure to special pays of more than Rs. 25 granted on account of unhealthiness of locality:

Provided that they shall not operate to reduce a special pay granted on account of unhealthiness of locality to a figure below Rs. 25.

4. Holders of the posts included in Schedule I will draw on and after the 1st March 1937, the rates of special pay shown against them.

5. With effect from the 1st March 1937, the posts included in Schedule II shall carry revised rates of special pay (granted for reasons other than unhealthiness of locality) as shown therein.

6. (*a*) The revised rates of special pay (hereinafter called "the revised rates") shown against the posts in Schedule II shall apply to

all occupants of those posts appointed or reappointed thereto after the 21st July 1931, subject to the exceptions provided in rule 7.

(*b*) A person who was appointed or reappointed to a post in Schedule II on or before the 21st July 1931, and has, save for periods of leave or for periods of officiating or temporary service in another post on the same time-scale or in a higher post, held it continuously since then, shall be entitled to draw, so long as he holds that post, the special pay which would have been attached to it, had the 15 per cent. cut orders and these present rules never been issued; otherwise he shall draw the revised rates.

7. The following persons who otherwise would be liable under rule 6 to the revised rates, shall be excepted from their application to the extent indicated:—

(*a*) A person who was in Government service on the 21st July 1931 and held on that date a lien or a suspended lien on a permanent post, appointed or reappointed to a post included in Schedule II after the 21st July 1931, shall, if the post is in the same line of service with the permanent post which he held on the 21st July 1931, be entitled to draw, while holding the post, the special pay to which he would have been entitled had the 15 per cent. cut orders been continued in force, or the revised rate, whichever is greater.

(*b*) A person to whom sub-rule (*a*) does not apply, appointed or reappointed to a post included in Schedule II after the 21st July 1931 but before the 1st March 1937, shall, if the rate of special pay actually drawn by him on the 28th February 1937 was more than the revised rate, be allowed, while holding the post to draw, in addition to the revised rate, a personal pay equal to the difference, such personal pay being absorbed in future increments (if any) of pay proper in the manner specified in Fundamental Rule 37.

(*c*) (*i*) A person belonging to a class which, under rule 6 of the Bengal Services (*ad interim* Revision of Pay) Rules, 1931, has been exempted from the operation of the 15 per cent. cut orders, appointed or reappointed after the 21st July 1931 but prior to the 1st March 1937 to a post included in Schedule II, shall be entitled to draw, for so long as he holds the post and is not appointed to a new post, the amount of special pay which he actually drew in respect of the post on the 28th February 1937.

Note.—Reappointment after a period of leave or a period of officiating or temporary service in a post on the same time-scale or a still higher post, to the post which a person held on the 28th February 1937, shall not be considered as an appointment to a new post for the purposes of this clause.

(*ii*) Such a person appointed or reappointed on or after the 1st March 1937 to a post included in Schedule II, shall draw the revised rates:

Provided that if, on the 28th February 1937 he held a lien or a suspended lien on a permanent post, and the post included in Schedule II to which he is appointed or reappointed on or after the 1st March 1937 is in the same line of service with the post on which he held a lien or a suspended lien on the 28th February 1937, he shall be entitled to draw, while holding the post, the special pay which he would have drawn had the 15 per cent. cut orders been continued in force and had he been subject to them, or the revised rate, whichever is greater.

8. No adjustments of special pay shall be allowed to any officer in respect of periods prior to the 1st March 1937.

D. GLADDING,
Secy. to the Govt. of Bengal.

SCHEDULE I.

Posts.	Rates of special pay.
	Rs.
1. Jails Department.	
1 Additional Jailor, Presidency Jail ..	50
Superintendents of Howrah and Darjeeling Jails	25
2. Education Department.	
Typist, Inspector of European Schools :	
Typist, Inspector of Schools, Dacca Division :	
Clerk, Bengal Engineering College :	
Clerk, Inspector of Schools, Burdwan Division :	
Clerk, Inspector of Schools, Chittagong Division :	
Clerk, Inspector of Schools, Rajshahi Division	20
3. Agriculture and Industries Department.	
Curator, Royal Botanic Garden, Sibpur ..	100
4. Public Works Department.	
1 Assistant of the Public Works Department	10
Head Estimator, City Division ..	20
5. Finance Department.	
Assistant-in-charge, Central Despatch Office	25
2 Assistants-in-charge of Sections, Central Despatch Office	15 each.

SCHEDULE II.

Posts.	Unrevised rates of special pay.	Revised rates of special pay.
	Rs.	Rs.
1. Revenue Department.		
Officer-in-charge, Bengal Traverse Party and Drawing Office	100	75
1 Assistant to the Officer-in-charge, Bengal Traverse Party and Drawing Office	50	40
Curator, Lloyd Botanic Garden, Darjeeling ..	50	40
Managers, Cinchona Plantations, Mungpoo and Munsong	100	75
Civil Surgeon, Chittagong Hill Tracts .. / Deputy Magistrates posted to Chittagong Hill Tracts.	37½	32½
Deputy Collector deputed to survey work ..	100	75
Officers of the Bengal Civil Service and Bengal Junior Civil Service when appointed as Assistant Settlement Officers or Technical Advisors or on land acquisition work—		
Officers of the Bengal Civil Service (Executive)	100	75
Officers of the Bengal Junior Civil Service ..	50	40
Collector of Calcutta	150	110
Assistant of the Office of the Director of Land Records	20	15
Sub-Inspectors of Police, Chittagong Hill Tracts	15	12½
Assistant Superintendents of Emigration in Bengal—		
Naihati	25	20
Kharagpur	20	15
Asansol	15	12½
2. Excise Department.		
Inspectors of Excise holding charge of districts ..	50	40

Posts.	Unrevised rates of special pay. Rs.	Revised rates of special pay. Rs.
3. Forest Department.		
Each attached gazetted officer in the Sundarbans Division	12½ per cent. of pay subject to a maximum of Rs. 37-8.	10 per cent. of pay subject to a maximum of Rs. 32.
Depot Officer, Siliguri	20	15
4. Registration Department.		
Personal Assistant to the Inspector-General of Registration	50	40
Sub-Registrars (including probationary Sub-Registrars) in charge of Sadar Registration offices	75—5—100	60—3—75
5. Irrigation Department.		
Upper Subordinates and Members of the Subordinate Engineering Service	75	60
Circle Officer, Canal Revenue Division ..	75	60
Overseers of the Damodar Division stationed at Jamalpur and Chanchai—		
(a) With a pay of Rs. 145 per mensem and below in the old scale or Rs. 140 and below in the revised scale	25	20
(b) With a pay of Rs. 155 per mensem in the old scale	15	12½
(c) With a pay of Rs. 165 per mensem in the old scale or Rs. 160 in the revised scale ..	5	5
Head Assistant, Office of the Chief Engineer ..	50	40
6. Judicial Department.		
Munsifs appointed as Assistant Settlement Officers	100	75
1 clerk, Chief Presidency Magistrate's Court ..	20	15

Posts.	Unrevised rates of special pay.	Revised rates of special pay.
	Rs.	Rs.
7. Political (Jails) Department.		
Civil Surgeons of districts in charge of district jails	150	110
	100	75
	75	60
	50	40
Deputy Superintendents of Sub-Jails ..	20	15
Civil Surgeon, Bankura	50	40
European Jailor, Alipore Central Jail ..	100	85
European Jailor, Presidency Jail	100	85
8. Police Department.		
Superior.		
Deputy Superintendent of Police, Intelligence Branch	100	75
Principal, Calcutta Training School	50	40
Deputy Superintendents of Police, Criminal Investigation Department	75	60
Deputy Superintendent of Police in charge of the Bengal portion of the Eastern Bengal and Assam Bengal Railways	100	75
Assistant Commissioners of Police, Calcutta, in charge of the Special Branch	100	75
Deputy Superintendents of Police placed in local charge of the police work of a subdivision other than the headquarters subdivision of a district ..	25	20
Deputy Superintendent of Police in charge of the Finger Print Bureau, Criminal Investigation Department	75	60
Deputy Superintendents of Police, Intelligence Branch, Criminal Investigation Department, Calcutta	100	75
1 Deputy Superintendent of Police, Intelligence Branch, Criminal Investigation Department, Calcutta (temporary)	100	75

Posts.	Unrevised rates of special pay.	Revised rates of special pay.
	Rs.	Rs.
Inferior—Bengal Police.		
Criminal Investigation Department—		
32 Inspectors	50	40
19 Sub-Inspectors	30	25
4 Sub-Inspectors (temporary)	30	25
Intelligence Branch—		
20 Inspectors	60	50
Sub-Inspectors	40	35
Assistant Sub-Inspectors	15	12½
Sergeants	40	35
Sub-Inspectors	20 15	15 12½
District Intelligence Branch—		
26 Inspectors	60	50
81 Sub-Inspectors	40	35
Police Training School—		
5 Inspectors	25	20
1 Inspector	30	25
1 Inspector	50	40
Inferior—Calcutta Police.		
Detective Department—		
5 Inspectors	50	40
Special Branch—		
Inspectors	60	50
Police Training School—		
4 Sub-Inspectors	20	15

Posts.	Unrevised rates of special pay.	Revised rates of special pay.
	Rs.	Rs.
Special Branch—		
15 Sub-Inspectors	40	35
17 Assistant Sub-Inspectors ..	15	12½
Detective Department—		
8 Sub-Inspectors	30	25
Armed Police—		
Sergeants	20	15
Motor Vehicles Department—		
5 Sergeants	50	40
2 Inspectors of Calcutta Police attached to the Police Training School	25	20
9. Political (Special) Department.		
Deputy Superintendents of Police, Detention Camps	100	75
1 Sub-Inspector, Hijli Detention Camp ..	30	25
2 Sub-Inspectors, Hijli Detention Camp ..	20	15
1 Inspector of Police, Berhampore Detention Camp	50	40
2 Sub-Inspectors, Berhampore Detention Camp (Unarmed Branch)	40	35
4 Sub-Inspectors, Berhampore Detention Camp (Armed Branch)	20	15
10. Education Department.		
Assistant Surgeons in charge of Government Hostels	25	20
	30	25
	50	40
Assistant Surgeons in charge of Government Hostels, Chittagong	10	10
	20	15
	30	25
	40	35
	50	40
	60	50
	70	57
	80	63

Posts.	Unrevised rates of special pay.	Revised rates of special pay.
	Rs.	Rs.
Assistant Surgeons in charge of Government Hostels, Imambarah, Hooghly	25	20
	30	25
	50	40
	70	57
Medical Officer in charge of Government Hostels, Dacca	87½	67½
Bursar, Presidency College	125	110
Inspectors of Schools	150	110
Assistant Master, Malda Zilla School :		
Assistant Master, Dacca Normal School ..	15	12½
Clerk and Compounder, Rajshahi College ..	20	15

Superintendents and Assistant Superintendents of Hostels—

—	Unrevised rates of special pay.			Revised rates of special pay.		
	Superintendents.			Superintendents.		
	Officers of the Bengal Educational Service.	Officers of the Subordinate Educational Service.	Assistant Superintendents.	Officers of the Bengal Educational Service.	Officers of the Subordinate Educational Service.	Assistant Superintendents.
	Rs.	Rs.	Rs.	Rs.	Rs.	Rs.
College Hostels—						
20 boarders and less ..	30	20	..	25	15	..
Between 21 and 40 ..	45	30	..	37½	25	..
Between 41 and 70 ..	60	45	20	50	37½	15
Between 71 and 100 ..	75	60	30	60	50	25
Between 101 and 200 ..	100	75	40	75	60	35
Above 200	125	90	50	92½	69	40
School Hostels—						
30 boarders or less ..	..	15	..	..	12½	..
Between 21 and 30 ..	..	20	..	..	15	..
Between 31 and 40 ..	..	25	10	..	20	10
Between 41 and 50 ..	..	30	15	..	25	12½
Between 51 and 75 ..	..	40	20	..	35	15
Between 76 and 100 ..	..	50	25	..	40	20
Above 100	..	60	30	..	50	25

Posts.	Unrevised rates of special pay.	Revised rates of special pay.
	Rs.	Rs.
11. Local Self-Government Department (Medical).		
Professor of Pathology, Medical College ..	225	200
3 Resident Medical Officers, Medical College Hospitals	200	145
Civil Surgeon, Dacca, Burdwan, Mymensingh, Chittagong or Jalpaiguri (when not an officer of the Indian Medical Service)	200	145
Chemical Examiner	150	110
Teachers of Campbell, Dacca, Burdwan, Mymensingh, Jalpaiguri and Chittagong Medical Schools	75	60
	100	75
	150	110
Assistant Professor, Medical College, Calcutta ..	75	60
	100	75
	150	110
Assistant Professors, Tropical School ..	75	60
	100	75
	150	110
First Assistant, Chemical Examiner, Bengal ..	150	110
2 Surgeons and Physicians, Out-patient Department, Medical College Hospitals	75	60
	100	75
	150	110
2 Casualty or Emergency Officers, Medical College Hospitals	50	40
Assistant Surgeon, Bacteriologist, Presidency General Hospital	100	75
	150	110
2 Assistant Surgeons, Sambhu Nath Pandit Hospital	15	12½
Teacher of Medical Jurisprudence, Dacca ..	15	12½
Deputy Superintendent, Mental Observation Ward, Bhowanipur	100	75
1 Sub-Assistant Surgeon, Dacca Medical School ..	20	15

Posts.	Unrevised rates of special pay.	Revised rates of special pay.
	Rs.	Rs.
Sub-Assistant Surgeons appointed to hold medical charge of Government Hostels	25	20
	15	12½
	12½	10
Sub-Assistant Surgeon attached to the Lalbazar Police Lock-up	15	12½
Sub-Assistant Surgeon attached to Dighinala Dispensary	20	15
1 head clerk, Civil Surgeon's office, Dacca ..	25	20
1 Sub-Assistant Surgeon at the Dacca Medical School	20	15
Sub-Assistant Surgeon, Police Hospital, Chinsura, Hooghly	30	25
Sub-Assistant Surgeon, Police Hospital, Chinsura, Hooghly	250 (per annum).	175 (per annum).
Teaching staff, Dacca Medical School	25 (each).	20 (each).
Medical Officer of the Dacca Medical School ..	15	12½
Sub-Assistant Surgeon employed as Instructor in First Aid and Ambulance Work in Calcutta Police	25	20
Deputy Superintendent, Ronaldshay Medical School, Burdwan	25	20
Sub-Assistant Surgeons attached to any of the Medical Schools in Bengal	40	35
	50	40
	75	60
4 Sub-Assistant Surgeons at Burdwan, Chittagong and Jalpaiguri Medical Schools	25	20
Sub-Assistant Surgeons holding temporary medical charge of a civil station	25	20
Teachers of the Compounders class in Dacca Medical School	20	15
12. Agriculture and Industries Department.		
Superintendent, Royal Botanic Garden, Calcutta ..	200	145
Deputy Collectors appointed as Assistant Registrars and Personal Assistant to Registrar, Co-operative Societies	100	75

Posts.	Unrevised rates of special pay.	Revised rates of special pay.
	Rs.	Rs.
Deputy Registrar, Co-operative Societies ..	200	145
Head Clerk, Government Weaving Institute, Serampore	30	25
Accountant, Government Weaving Institute, Serampore	15	12½
Jobber, Government Weaving Institute, Serampore	15	12½
Hostel Superintendents, Malda Weaving School ..	15	12½
Hostel Superintendents, Edward Industrial School, Bogra	15	12½
Hostel Superintendents, Bengal Government Technical Schools	15	12½
Superintendent and Assistant Superintendent, Bengal Survey School, Tippera	40	35
	20	15
13. Local Self-Government (Public Health) Department.		
Director of Public Health, Bengal	200	145
Assistant Director of Public Health, Malaria ..	200	145
Director of Public Health Laboratory ..	300	200
Sub-Assistant Surgeon stationed at Diamond Harbour	20	15
14. Public Works Department.		
Upper Subordinates and Overseers while in charge of Subdivisions	75	60
15. Finance Department.		
Probate Deputy Collector of Calcutta	100	75
16. Bengal Secretariat.		
Head Assistants	100	75
	50	40

Miscellaneous.

NOTIFICATION.

No. 1295Mis.—30th March 1937.—With reference to notification No. 6105Mis., dated the 14th September 1936, published at page 2281, Part I of the *Calcutta Gazette* of the 17th September 1936, the Governor in Council hereby declares, under section 25 of the Negotiable Instruments Act, XXVI of 1881, the 9th June 1937 to be a public holiday for the observance of the birthday of His Majesty the King Emperor of India.

D. GLADDING,

Secy. to the Govt. of Bengal.

COMMERCE DEPARTMENT.

NOTIFICATIONS.

No. 3540Com.—30th March 1937.—In exercise of the power conferred by section 29 of the Indian Boilers Act, 1923 (V of 1923), the Government of Bengal is pleased to make the following amendments in the Bengal Boilers Rules, 1928, published under notification No. 2827-Com., dated the 7th July 1928, namely:—

Amendments.

1. *For* rule 2 of the said rules *substitute* the following rule:—

"2. *Payment of fees, etc.*—All fees, costs and penalties payable under the Act or any regulation or rule framed thereunder, shall be deposited in a Government treasury under the head 'XXXVI—Miscellaneous Departments—Fees for the Inspection of Steam Boilers', by chalan in triplicate, the original copy being forwarded to the Chief Inspector of Boilers, Bengal, Calcutta, together with the application for inspection. An application under section 7 or section 8, to which the treasury receipt obtained on payment of the prescribed fee is attached, shall be deemed to be accompanied by the prescribed fee."

2. In rule 10 of the said rules—

(*i*) in clause (*4*) *for* the word "calendar" *substitute* the word "financial";

(*ii*) after clause (*4*) *insert* the word "and";

(*iii*) *omit* the semicolon and the word "and" at the end of clause (*5*); and

(*iv*) *delete* clause (*6*).

3. *For* clause (*7*) of rule 12 of the said rules *substitute* the following clause:—

"(*7*) *Additional fee for inspection on Sundays and certain holidays.*—(*a*) Notwithstanding the provisions of clause (*3*) an additional fee of Rs. 50 shall be charged for the inspection of a boiler on a Sunday, Christmas Day, New Year's Day, Good Friday and the King's Birthday, provided that such inspection is made at the request of the owner of the boiler.

(*b*) The additional fee charged under sub-clause (*a*) shall be paid in the manner prescribed in rule 2."

[*Note.*—The Inspector who makes the inspection shall be entitled to an allowance equal to half the additional fee so charged.]

4. *For* rule 19 of the said rules *substitute* the following rule:—

"19. *Application for inspection and certificate.*—When a certificate is required for a boiler, application shall be made by the owner to the Inspector through the Chief Inspector of Boilers at the Head Office,

Calcutta, in Form B No. 1, appended to these rules, stating the date on which the boiler will be ready for inspection. Such application shall be accompanied by the treasury receipt in original obtained on payment of the prescribed fee On receipt of the application at the head office it shall be sent to the Inspector concerned with the necessary endorsement thereon by the Cashier, showing that the fee and the extra fee, if any, chargeable for inspection on a Sunday or other holiday as laid down in clause (7) of rule 12 together with the Inspector's travelling expenses, if any, chargeable under sub-clause (*a*) or sub-clause (*b*) of clause (8) of rule 12 have been deposited in a Government Treasury. If the date on which the boiler will be ready for inspection as stated in the application by the owner is unsuitable for inspection of the boiler, the Inspector shall fix a date within thirty days from the date of the receipt of the application for such inspection and will give the owner not less than ten days' notice of the date so fixed."

5. *For* Form B No. 1 appended to the said rules *substitute* the following form:—

Issued by the
Chief Inspector of Boilers,
Bengal.

Registered No.————

Certificate No.————

FORM B. No. I.

APPLICATION FOR THE INSPECTION OF BOILERS AND STEAM PIPES UNDER THE INDIAN BOILERS ACT, V OF 1923.

(Division I, Rule 19.)

Registered number of boiler.	Name of Owner or Agent	Where situated	Date of inspection	Description of boiler and age.
1	2	3	4	5

I hereby submit application to the Inspector of Boilers for inspection of and the grant of a Certificate for the boiler abovenamed, together with the treasury receipt in original obtained on payment of the prescribed fee specified below.

Dated at————

This————day of————19

Owner or Agent.

Division II.

TO BE SENT TO OWNER WITH APPLICATION FORM.

I certify that the following fees and expenses are payable:—

Boiler number.	Boiler rating.	Fees.	Extra fee for Sunday and holiday inspection and other expenses.	Total.
1	2	3	4	5

N.B.—This form with Division I, duly filled in together with the treasury receipt in original obtained on payment of the prescribed fees and expenses specified above, must be forwarded as soon as possible to the office of the Chief Inspector of Boilers, Calcutta, in order that the necessary inspection may be made.

Dated at Calcutta,

This———day of————19

Chief Inspector of Boilers.

Division III.

No.

I hereby certify that Rupees annas and pies have been deposited in the treasury as per Receipt No. dated on account of the inspection of the boiler abovenamed.

Dated at Calcutta,

This———day of————19

Cashier,

Office of the Chief Inspector of Boilers, Bengal.

Division IV.

SCALE OF FEES.

[*See Regulations 157 and 159 and also Rules 11 (1) and 12.*]

	Annual inspection.	Registration an first inspection under regulation 159.
	Rs.	Rs.
For boiler rating not exceeding 100 square feet ..	25	40
For boiler rating exceeding 100 square feet but not exceeding 300 square feet.	30	50
For boiler rating exceeding 300 square feet but not exceeding 500 square feet.	35	60
For boiler rating exceeding 500 square feet but not exceeding 700 square feet.	40	70
For boiler rating exceeding 700 square feet but not exceeding 900 square feet.	50	80
For boiler rating exceeding 900 square feet but not exceeding 1,100 square feet.	60	90
For above 1,100	70	100

No. 3420Com.—30th March 1937.—In exercise of the powers conferred by sub-section (*1*) of section 5 of the Indian Boilers Act, 1923 (V of 1923), and in continuation of this department notification No. 944Com., dated the 30th January 1937, the Governor in Council is pleased to extend the period of appointment of Mr. Abani Mohan Ghosh as a temporary Inspector of Boilers within the Presidency of Bengal up to the 31st August 1937.

D. GLADDING,

Secy. to the Govt. of Bengal.

DEPARTMENT OF COMMERCE AND LABOUR.

NOTIFICATION.

No. 3693Com.—3rd April 1937.—Mr. N. N. Sen Gupta, Electric Inspector, Bengal, is appointed to be the Secretary to the Licensing Board, Bengal, constituted in accordance with the provisions of regulation 2 of the regulations published under this Government notification No. 12230Com., dated the 24th December 1935, *vice* Mr. P. C. Sarkar.

A. HUGHES,

Dy. Secy. to the Govt. of Bengal.

PUBLIC WORKS DEPARTMENT.

Establishment.

NOTIFICATIONS.

Minister-in-charge: The Hon'ble Nawab Sir Mohiuddin Faroqui, Kt., of Ratanpur.

No. 18.—25th March 1937.—Mr. H. A. Keatinge, Assistant Executive Engineer of the Bengal Senior Service of Engineers, was granted by the High Commissioner for India leave, on medical certificate, for a period of three months, viz., on average pay for twenty-five days and on half average pay for two months and five days, in extension of the leave granted to him under this department notification No. 16, dated the 17th March 1936. This supersedes this department notification No. 49, dated the 10th November 1936.

2. Mr. Keatinge has now been granted by the High Commissioner for India a further extension of leave, on medical certificate, on half average pay for a period of six months.

No. 19.—31st March 1937.—Mr. T. Mitra, Executive Engineer, City Division, in the Presidency Circle, is appointed to officiate as Superintending Engineer of that circle, in addition to his own duties, with effect from the 5th March 1937, until relieved by Mr. A. J. King, officiating Superintending Engineer, on the 1st April 1937.

No. 20. — 31st March 1937. — Mr. A. J. King, O.B.E., I.S.E., on special duty in the post of Special Officer, Road Development Projects, Bengal, is appointed, with effect from the 1st April 1937, to officiate as Superintending Engineer of the Presidency Circle and to hold the post of the Special Officer in addition until further orders.

S. K. HALDAR, *Special Officer.*

IRRIGATION DEPARTMENT.

Establishment.

NOTIFICATION.

No. 8-C.I.E. — 31st March 1937. — Babu Angsujit Mukherji, Assistant Engineer, is granted, under rule 81(*b*)(*ii*) of the Fundamental Rules, leave on average pay for one month, with effect from the 3rd May 1937.

T. A. CURRY, *Chief Engineer.*

DEPARTMENT OF AGRICULTURE AND INDUSTRIES.

Orders by the Registrar of Co-operative Societies, Bengal.

No. 33L.—1st April 1937.—Whereas I am of opinion, as the result of an enquiry held into the constitution, working and financial condition of the Pramanikpara Co-operative Bank (registered No. 76 of 1929), in the sub-division Sadar in the district of Jalpaiguri, under sub-section (*1*) of section 35 of the Co-operative Societies Act, II of 1912, that the society ought to be dissolved.

Now, therefore, in exercise of the power conferred by sub-section (*1*) of section 39 of the same Act, I hereby cancel the registration of the said society.

And further, in exercise of the power conferred by sub-section (*1*) of section 42 of the same Act, I hereby appoint the Inspector of Co-operative Societies, Jalpaiguri, to be liquidator of the said society.

No. 4420.—1st April 1937.—In modification of this office notification No. 201L., dated the 3rd September 1926, so far it relates to the appointment of late Babu Charu Chandra Dutt, formerly pleader, Feni, as liquidator of the Hassanpur Joutha Bank (registered No. 93 of 1912) in the district of Noakhali, I appoint the senior Departmental Officer in charge of Co-operative Societies, Feni area, instead, as liquidator of the said society.

A. M. ARSHADALI,

Regr., Co-operative Societies, Bengal.

REVENUE DEPARTMENT.

Land Revenue.

NOTIFICATIONS.

Dacca.—No. 8190L.R.—2nd April 1937.—In exercise of the power conferred by sub-section 3 of section 158A of the Bengal Tenancy Act, 1885 (Act VIII of 1885), the Governor is pleased to appoint for the purpose of that section, the Certificate Officers of Manikganj, Narayanganj and Dacca Sadar to perform the functions of Certificate Officers under the Bengal Public Demands Recovery Act, 1913 (Bengal Act III of 1913), for the recovery of arrears of rent (including cesses) due to the estate of Babu Dwijesh Chandra Roy Chowdhury, proprietor of the Dhankora Estate No. II, situated in the district of Dacca.

Bogra.—No. 8195L.R.—2nd April 1937.—Under section 3 of the Bengal Survey Act, 1875 (Bengal Act V of 1875), the Governor is pleased to order that a survey shall be made of all lands comprised within the boundaries of mauza Banskata, jurisdiction list No. 183, police-station Jaipurhat, in the district of Bogra, and further that the boundaries of the estates, tenures, mauzas and fields be demarcated on the lands so to be surveyed.

Bogra.—No. 8196L.R.—2nd April 1937.—In exercise of the power conferred by section 101(*1*) of the Bengal Tenancy Act (Act VIII of 1885), the Governor is pleased to order that a survey shall be made and a record-of-rights prepared in respect of all the lands comprised within the boundaries of mauza Banskata, jurisdiction list No. 183, police-station Jaipurhat, in the district of Bogra.

The particulars to be recorded in the record-of-rights shall be the following:—

(*a*) the name of each tenant or occupant;

(*b*) the class or classes to which each tenant belongs, that is to say, whether he is a tenure-holder, raiyat holding at fixed rates, settled raiyat, occupancy raiyat, non-occupancy or under-raiyat, with or without a right of occupancy, and if he is a tenure-holder, whether he is a permanent tenure-holder or not, and whether his rent is liable to enhancement during the continuance of his tenure;

(*c*) the situation and quantity of the land held by each tenant or occupier;

(*d*) the name of each tenant's landlord;

(*e*) the name of each proprietor in the local area or estate with the character and extent of his interest, and the situation and quantity and one or more of the boundaries of the lands, if any, which are his private lands as defined in Chapter XI of the Act;

(*f*) the rent and cess lawfully payable by each tenant at the time the record-of-rights is being prepared;

(*g*) the amount payable in respect of any rights of pasturage, forest rights, rights over fisheries and the like at the time the record-of-rights is being prepared, the condition and incidents appertaining to such rights and if the amount is a gradually increasing amount, the time at which and the increments by which it increases;

(*h*) the mode in which that rent has been fixed, whether by contract, by order of a court or otherwise;

(*i*) if the rent is a gradually increasing rent, the time at which and the steps by which it increases;

(*j*) the rights and obligations of each tenant and landlord in respect of—

(*i*) the use by tenants of water for agricultural purposes, whether obtained from a river, jhil, tank or well or any other source of supply, and

(*ii*) the repair and maintenance of appliances for securing a supply of water for the cultivation of the land held by each tenant, whether or not such appliances be situated within the boundaries of each land;

(*k*) the special conditions and incidents, if any, of the tenancy;

(*l*) any right-of-way or other easement attaching to the land for which a record-of-rights is being prepared;

(*m*) if the land is claimed to be held rent-free, whether or not rent is actually paid, and if not paid, whether or not the occupant is entitled to hold the land without payment of rent, and, if so entitled, under what authority:

Provided that if lands are not used for purposes connected with agriculture or horticulture, it shall be sufficient to record that fact together with the prescribed particulars relating to the occupant, the landlord and the tenancy.

Burdwan.—No. 8305L.R.—5th April 1937.—Under the provisions of section 3(*14*) of the Bengal Tenancy Act, 1885 (Act VIII of 1885), Babu Surendra Nath Das Gupta, Settlement Kanungo, is authorised to discharge, in the district of Burdwan, the functions of a Revenue Officer, under Chapter X of that Act, so far as they relate to surveys and the preparation of record-of-rights.

Burdwan.—No. 8306L.R.—5th April 1937.—In exercise of the powers conferred by section 3 of the Bengal Land Revenue Settlement Regulation, 1825 (IX of 1825), read with section 20 of the Bengal Land Revenue Settlement Regulation, 1822 (VII of 1822), the Governor is pleased to vest Babu Surendra Nath Das Gupta, Settlement Kanungo, who has, by notification No. 4968C.P., dated the 30th March 1937, been vested by the Board of Revenue with the powers of a Collector in the estate of Babu Bibhuti Bhusan Pal Choudhuri, in the district of Burdwan, for the purpose of the work of maintenance of the record-of-rights of that estate, with powers under section 19 of the said Bengal Land Revenue Settlement Regulation, 1822, within the local limits of that estate, to require and compel persons mentioned in the section to attend and produce accounts and other papers and to examine such persons under that section for the purpose of the said work of the maintenance of the record-of-rights.

Midnapore. — No. 8308L.R. — 5th April 1937.—In pursuance of the provisions of section 1 of the Bengal Rent Recovery (Under Tenures) Act, 1865 (Bengal Act VIII of 1865), Major I. Stewart, Additional District Magistrate and Collector, Midnapore, is authorised to exercise the full powers of a Collector under the said Act for the purpose of holding the Patni sales in that district on the 15th April 1937 and 15th May 1937.

Khulna-Jessore-Nadia. — No. 8311L.R. — 5th April 1937.—Under the provisions of section 3(*14*) of the Bengal Tenancy Act, 1885, (Act VIII of 1885), Maulvi Saiyid Fazlur Rahaman, Settlement Kanungo, is authorised to discharge, in the districts of Khulna, Jessore and Nadia, the functions of a Revenue Officer, under Chapter X of that Act, so far as they relate to surveys and the preparation of record-of-rights.

Khulna-Jessore-Nadia. — No. 8312L.R.—5th April 1937.—In exercise of the powers conferred by section 3 of the Bengal Land Revenue Settlement Regulation, 1825 (IX of 1825), read with section 20 of the Bengal Land Revenue Settlement Regulation, 1822 (VII of 1822), the Governor is pleased to vest Maulvi Saiyid Fazlur Rahaman, Settlement Kanungo, who has, by notification No. 4962-C.P., dated the 25th March 1937, been vested by the Board of Revenue with the powers of a Collector in the estates of late Srimati

Krishna Pramada Dasi in the district of Khulna, Babu Santimoy Roy Choudhury in the district of Jessore and of late Srimati Krishna Pramada Dasi in the district of Nadia, for the purpose of the work of maintenance of the record-of-rights for those estates, with powers under section 19 of the said Bengal Land Revenue Settlement Regulation, 1822, within the local limits of those estates, to require and compel persons mentioned in the section to attend and produce accounts and other papers and to examine such persons under that section for the purpose of the said work of the maintenance of the record-of-rights.

Chittagong.—No. 8314L.R.—5th April 1937.—Under the provisions of section 3(*14*) of the Bengal Tenancy Act, 1885 (Act VIII of 1885), Babu Hiralal Karmakar, Settlement Kanungo, is authorised to discharge, in the district of Chittagong, the functions of a Revenue Officer, under Chapter X of that Act, so far as they relate to surveys and the preparation of record-of-rights.

Chittagong.—No. 8315L.R.—5th April 1937.—In exercise of the powers conferred by section 3 of the Bengal Land Revenue Settlement Regulation, 1825 (IX of 1825), read with section 20 of the Bengal Land Revenue Settlement Regulation, 1822 (VII of 1822), the Governor is pleased to vest Babu Hiralal Karmakar, Settlement Kanungo, who has by notification No. 4967-C.P., dated the 30th March 1937, been vested by the Board of Revenue with the powers of a Collector in the estates of Babu Kashi Mohan Sikdar and Maulvi Abdul Bari Choudhury in the district of Chittagong, for the purpose of the work of maintenance of the record-of-rights of those estates, with powers under section 19 of the said Bengal Land Revenue Settlement Regulation, 1822, within the local limits of those estates, to require and compel persons mentioned in the section to attend and produce accounts and other papers and to examine such persons under that section for the purpose of the said work of the maintenance of the record-of-rights.

Land Acquisition.

NOTIFICATIONS.

Howrah.—No. 8175L.A.—2nd April 1937.—The Governor is pleased to cancel the notification No. 14458L.A., dated the 29th August 1935, under section 4 of the Land Acquisition Act, published at page 1682, Part I of the *Calcutta Gazette* of the 5th September 1935, in respect of the proposed acquisition of 0·002 of an acre of land required by the Howrah Municipality for easing out a bad corner at Park's Garden Lane in the village of Ramkrishnapur, jurisdiction list No. 7, thana Howrah, pargana Boro, district Howrah.

Mymensingh.—No. 8178L.A.—2nd April 1937.—Whereas it appears to the Governor that land is likely to be required to be taken by Government at the expense of the Tangail Municipality for a public purpose, viz., for an approach to the main road in the village of Akurtakur, jurisdiction list No. 63, thana Tangail, pargana Kagmari, district Mymensingh, it is hereby notified that for the above purpose a piece of land comprising a portion of cadastral plot No. 435, and measuring, more or less, 0·027 of an acre, is likely to be required within the aforesaid village of Akurtakur.

This notification is made, under the provisions of section 4 of Act I of 1894, to all whom it may concern.

A plan of the land may be inspected in the office of the Land Acquisition Deputy Collector, Tangail.

In exercise of the powers conferred by the aforesaid section, the Governor is pleased to authorise the officers for the time being engaged in the undertaking, with their servants and workmen, to enter upon and survey the land and do all other acts required or permitted by that section.

Any person interested in the above land, who has any objection to the acquisition thereof, may, within thirty days after the date on which public notice of the substance of this notification is given in the locality, file an objection in writing before the Land Acquisition Deputy Collector, Tangail.

Bogra.—No. 8184L.A.—2nd April 1937.—Whereas it appears to the Governor that land is likely to be required to be taken by Government at the expense of the Moydanhata union board for a public purpose, viz., for the Moydanhata union board office and public play ground in the village of Daridahahat, jurisdiction list No. 22, thana Shibganj, pargana Poladashi, district Bogra, it is hereby notified that for the above purpose a piece of land comprising cadastral plots Nos. 297, 416, 421 and parts of plots Nos. 415, 420, 417, 422 and 461, and measuring, more or less, 3·87 acres, is likely to be required within the aforesaid village of Daridahahat.

This notification is made, under the provisions of section 4 of Act I of 1894, to all whom it may concern.

A plan of the land may be inspected in the office of the Collector of Bogra.

In exercise of the powers conferred by the aforesaid section, the Governor is pleased to authorise the officers for the time being engaged in the undertaking, with their servants and workmen, to enter upon and survey the land and do all other acts required or permitted by that section.

Any person interested in the above land, who has any objection to the acquisition thereof, may, within thirty days after the date on which public notice of the substance of this notification is given in the locality, file an objection in writing before the Collector of Bogra.

Rangpur.—No. 8198L.A.—2nd April 1937.—Whereas it appears to the Governor that land is likely to be required to be taken by Government at the public expense for a public purpose, viz., for construction of a residence for the Collector of Rangpur, in the village of Raghunathganj, jurisdiction list No. 93, thana Rangpur, pargana Manthana, district Rangpur, it is hereby notified that for the above purpose a piece of land comprising cadastral plot No. 315 (entire), and measuring, more or less, 5·21 acres, is likely to be required within the aforesaid village of Raghunathganj.

This notification is made, under the provisions of section 4 of Act I of 1894, to all whom it may concern.

A plan of the land may be inspected in the office of the Collector of Rangpur.

In exercise of the powers conferred by the aforesaid section, the Governor is pleased to authorise the officers for the time being engaged in the undertaking, with their servants and workmen, to enter upon and survey the land and do all other acts required or permitted by that section.

Any person interested in the above land, who has any objection to the acquisition thereof, may, within thirty days after the date on which public notice of the substance of this notification is given in the locality, file an objection in writing before the Collector of Rangpur.

Howrah.—No. 8225L.A.—2nd April 1937.—Whereas it appears to the Governor that land is likely to be required to be taken by Government at the expense of the Lillooah union board for a public purpose viz., for extension of the T. R. Khemka Free Middle English School compound, in the village of Lillooah, jurisdiction list No. 13, thana Lillooah, pargana Boro, district Howrah, it is hereby notified that for the above purpose a piece of land measuring, more or less, 0·087 of an acre, bounded on the—

North—By Lillooah Chawkpara Road and lands of the trustees of Brahma-Bagicha,

East—By the lands of the trustees of Brahma-Bagicha,

South—By union board lane,

West—By union board lane, the school entrance and Lillooah Chawkpara Road,

is likely to be required within the aforesaid village of Lillooah.

This notification is made, under the provisions of section 4 of Act I of 1894, to all whom it may concern.

A plan of the land may be inspected in the office of the Collector of Howrah.

In exercise of the powers conferred by the aforesaid section, the Governor is pleased to authorise the officers for the time being engaged in the undertaking, with their servants and workmen, to enter upon and survey the land and do all other acts required or permitted by that section.

Any person interested in the above land, who has any objection to the acquisition thereof, may, within thirty days after the date on which public notice of the substance of this notification is given in the locality, file an objection in writing before the Collector of Howrah.

Noakhali.—No. 8320L.A.—5th April 1937.—Whereas it appears to the Governor that land is likely to be required to be taken by Government at the public expense for a public purpose, viz., for the extension of the new headquarters at Maizdee, in the villages of Krisnarampur and Madhusudhanpur, jurisdiction list Nos. 95 and 96, respectively, thana Sudharam, zilla Noakhali, it is hereby notified that for the above purpose a piece of land measuring, more or less, 22·02 acres, comprising cadastral survey plots Nos. 555, 558, 585, 586, 587, 590, 591, 589, 588, 584, 559, 579, 583, 582, 580, 581, 565, 578, 577, 576, 603, 623, 574, 575 and 573 and parts of cadastral survey plots Nos. 556, 557, 546, 560, 561, 564, 602, 604, 617, 622, 626, 571 and 569 of Krisnarampur and Nos. 151, 152, 153, 154 and 155 and part of No. 156 of Madhusudhanpur, is likely to be required within the aforesaid villages of Krisnarampur and Madhusudhanpur.

This notification is made, under the provisions of section 4 of Act I of 1894, to all whom it may concern.

A plan of the land may be inspected in the office of the Collector of Noakhali.

In exercise of the powers conferred by the aforesaid section, the Governor is pleased to authorise the officers for the time being engaged in the undertaking, with their servants and workmen, to enter upon and survey the land and do all other acts required or permitted by that section.

Any person interested in the above land, who has any objection to the acquisition thereof, may, within thirty days after the date on which public notice of the substance of this notification is given in the locality, file an objection in writing before the Collector of Noakhali.

Burdwan.—No. 8323L.A.—5th April 1937.—Whereas it appears to the Governor that land is likely to be required to be taken by Government at the public expense for a public purpose, viz., for the 12th mile of the Burdwan Arambag Road, in the villages of Mogalmari and Bujrukdighi, jurisdiction list Nos. 59 and 62, respectively, thana Rayna, parganas Samarshahi and Khandaghosh, district Burdwan, it is hereby notified that for the above purpose a piece of land comprising parts of cadastral survey plots Nos. 223, 270-278, 280, 281, 286, 288-298, 943-945, 950-952, 976, 977, 980-990, 1009, 1011, 1013, 1032-1035, 1043-1046, 1058-1061, 1068, 1069, 1074-1076, 1084, 1085, 1090-1092, 1277 and 1284

in mauza Mogalmari and parts of cadastral survey plots Nos. 13, 181-184, 186, 189-193, 198 and 199 in mauza Bujrukdighi, and measuring, more or less, 14·99 acres, is likely to be required within the aforesaid villages of Mogalmari and Bujrukdighi.

This notification is made, under the provisions of section 4 of Act I of 1894, to all whom it may concern.

A plan of the land may be inspected in the office of the Special Land Acquisition Officer, Burdwan, as well as in that of the Executive Engineer, Burdwan Division, Hooghly.

In exercise of the powers conferred by the aforesaid section, the Governor is pleased to authorise the officers for the time being engaged in the undertaking, with their servants and workmen, to enter upon and survey the land and do all other acts required or permitted by that section.

Any person interested in the above land, who has any objection to the acquisition thereof, may, within thirty days after the date on which public notice of the substance of this notification is given in the locality, file an objection in writing before the Collector of Burdwan.

Pabna.—No. 8358L.A.—5th April 1937.—Whereas it appears to the Governor that land is likely to be required to be taken by Government at the expense of the Pabna Municipality for a public purpose, viz., for the extension of Salgaria Muhammadan burial ground, in the village of Salgaria, jurisdiction list No. 107, thana Pabna, pargana Bajooresh Nazirpur, district Pabna, it is hereby notified that for the above purpose a piece of land comprising cadastral plot No. 1658, parts of plots Nos. 1657, 1659 and 1661, and measuring, more or less, 0·81 of an acre, is likely to be required within the aforesaid village of Salgaria.

This notification is made, under the provisions of section 4 of Act I of 1894, to all whom it may concern.

A plan of the land may be inspected in the office of the Collector of Pabna.

In exercise of the powers conferred by the aforesaid section, the Governor is pleased to authorise the officers for the time being engaged in the undertaking, with their servants and workmen, to enter upon and survey the land and do all other acts required or permitted by that section.

Any person interested in the above land, who has any objection to the acquisition thereof, may, within thirty days after the date on which public notice of the substance of this notification is given in the locality, file an objection in writing before the Collector of Pabna.

Dacca.—No. 8361L.A.—5th April 1937.—Whereas it appears to the Governor that land is likely to be required to be taken by Government at the expense of the Dacca Municipality for a public purpose, viz., for drainage at the Azimpura Road, in the mahalla of Atashkhana, in the town of Dacca, Ward No. 7, sheet No. 10, thana Lalbag, pargana Jahangirnagar, district Dacca, it is hereby notified that for the above purpose a piece of land comprising cadastral survey plot No. 270 and part of cadastral survey plot No. 272, and measuring, more or less, 0·1095 of an acre, is likely to be required within the aforesaid mahalla of Atashkhana.

This notification is made, under the provisions of section 4 of Act I of 1894, to all whom it may concern.

A plan of the land may be inspected in the office of the Collector of Dacca.

In exercise of the powers conferred by the aforesaid section, the Governor is pleased to authorise the officers for the time being engaged in the undertaking, with their servants and workmen, to enter upon and survey the land and do all other acts required or permitted by that section.

Any person interested in the above land, who has any objection to the acquisition thereof, may, within thirty days after the date on which public notice of the substance of this notification is given in the locality, file an objection in writing before the Collector of Dacca.

Chittagong. — No. 8364L.A. — 5th April 1937.—Whereas it appears to the Governor that land is likely to be required to be taken by Government partly at the expense of the Rouzan R.R.A.C. Institution and partly at the public expense for a public purpose, viz., for the play ground of Rouzan R.R.A.C. Institution in the village of Sultanpur, police-station Rouzan, zilla Chittagong, it is hereby notified that for the above purpose a piece of land comprising parts of revisional survey plots Nos. 4464, 4465, 4466, 4472, 4474, 4483 and 4484, and whole of plots Nos. 4485, 4486, 4487, 4488, 4489, 4490, 4491, 4492, 4493, 4494, 4495, 4496, 4497 and 4498, and measuring, more or less, 1·73 acres, is likely to be required within the aforesaid village of Sultanpur, police-station Rouzan.

This notification is made, under the provisions of section 4 of Act I of 1894, to all whom it may concern.

A plan of the land may be inspected in the office of the Collector of Chittagong.

In exercise of the powers conferred by the aforesaid section, the Governor is pleased to authorise the officers for the time being engaged in the undertaking, with their servants and workmen, to enter upon and survey the land and do all other acts required or permitted by that section.

Any person interested in the above land, who has any objection to the acquisition thereof, may, within thirty days after the date on which public notice of the substance of this notification is given in the locality, file an objection in writing before the Collector of Chittagong.

Howrah.—No. 8370L.A.—5th April 1937.—Whereas it appears to the Governor that land is likely to be required to be taken by Government at the expense of the district board, Howrah, for a public purpose, viz., for the diversion of a portion of Nabagram-Baganda Local Board Road, in the village of Basudebpur, jurisdiction list No. 142, thana Shampur, pargana Mandalghat, district Howrah, it is hereby notified that for the above purpose a piece of land measuring, more or less, 0·551 of an acre bounded on the—

North—By Nabagram-Baganda Local Board Road and Bama Pada Mukhopadhay's land,

South—By Nabagram-Baganda Local Board Road and Aswini Kumar Chakrabarti's land,

East—By Nabagram Baganda Local Board Road, lands of Bama Pada Mukhopadhay, Bhuban Mandal and others, and land of Nibash Chakrabarti and village road,

West—By land of Bama Pada Mukhopadhay, Basudebpur Board School compound, ditch of Bhuban Mandal and others, Surendra Nath Chakrabarti's land, village road, land of Nibash Chakrabarti and Aswini Kumar Chakrabarti.

is likely to be required within the aforesaid village of Basudebpur.

This notification is made, under the provisions of section 4 of Act I of 1894, to all whom it may concern.

A plan of the land may be inspected in the office of the Subdivisional Officer of Uuluberia.

In exercise of the powers conferred by the aforesaid section, the Governor is pleased to authorise the officers for the time being engaged in the undertaking, with their servants and workmen, to enter upon and survey the land and do all other acts required or permitted by that section.

Any person interested in the above land, who has any objection to the acquisition thereof, may, within thirty days after the date on which public notice of the substance of this notification is given in the locality, file an objection in writing before the Land Acquisition Deputy Collector of Uluberia.

Rajshahi.—No. 8373L.A.—5th April 1937.—Whereas it appears to the Governor that land is likely to be required to be taken by Government partly at the public expense and partly at the expense of the Rajshahi Girls' Madrassa Commttiee for a public purpose, viz., for construction of the Girls' Madrassa building, in the village of Boalia, jurisdiction list No. 203, thana Boalia, pargana Garherhat, district Rajshahi, it is hereby notified that for the above purpose a piece of land comprising cadastral plots Nos. 2582, 2583, 2584 and 2585, and measuring, more or less, 0·31 of an acre, is likely to be required within the aforesaid village of Boalia.

This notification is made, under the provisions of section 4 of Act I of 1894, to all whom it may concern.

A plan of the land may be inspected in the office of the Collector of Rajshahi.

In exercise of the powers conferred by the aforesaid section, the Governor is pleased to authorise the officers for the time being engaged in the undertaking, with their servants and workmen, to enter upon and survey the land and do all other acts required or permitted by that section.

Any person interested in the above land, who has any objection to the acquisition thereof, may, within thirty days after the date on which public notice of the substance of this notification is given in the locality, file an objection in writing before the Collector of Rajshahi.

DECLARATIONS.

Malda.—No. 8181L.A.—2nd April 1937.—Whereas it appears to the Governor that land is required to be taken by Government at the expense of the English Bazar Municipality for a public purpose, viz., for a Muhammadan burial ground in the village of Maheshmati, jurisdiction list No. 66, thana English Bazar, pargana Bhatia Gopalpur, zilla Malda, it is hereby declared that for the above purpose a piece of land comprising cadastral plots Nos. 9 and 10, and measuring, more or less, 3·59 acres, is required within the aforesaid village of Maheshmati.

This declaration is made, under the provisions of section 6 of Act I of 1894, to all whom it may concern.

A plan of the land may be inspected in the office of the Collector of Malda.

Hooghly.—No. 8187L.A.—2nd April 1937.—Whereas it appears to the Governor that land is required to be taken by Government partly at the public expense and partly at the expense of the authorities of the Balika Bani Mandir at Chinsura for a public purpose, viz., for the extension of the Balika Bani Mandir at Chinsura in the town of Chinsura, jurisdiction list No. 20, in thana Chinsura, pargana Arsa, district Hooghly, it is hereby declared that for the above purpose a piece of land comprising cadastral plot No. 5234, and measuring, more or less, 0·049 of an acre, is required within the aforesaid town of Chinsura.

This declaration is made, under the provisions of section 6 of Act I of 1894, to all whom it may concern.

A plan of the land may be inspected in the office of the Land Acquisition Officer of Hooghly.

Tippera.—No. 8222L.A.—2nd April 1937.—Whereas it appears to the Governor that land is required to be taken by Government at the public expense for a public purpose, viz., for closing the breach of the Gumti right embankment at Dumuria in

the village of Majhigaccha, pargana Meherkul, zilla Tippera, it is hereby declared that for the above purpose a piece of land measuring, more or less, 0·78 of an acre, bounded on the —

North—By remaining portion of cadastral survey plots Nos. 769, 775, 776 and 777,

East—By remaining portion of cadastral survey plots Nos. 776, 777, 774 and 771,

South—By remaining portion of cadastral survey plots Nos. 769, 775 and embankment,

West—By portion of embankment, remaining portion of cadastral survey plots Nos. 775, 774 and portion of cadastral survey plot No. 770,

is required within the aforesaid village of Majhigaccha.

This declaration is made, under the provisions of section 6 of Act I of 1894, to all whom it may concern.

A plan of the land may be inspected in the office of the Collector of Tippera.

Mymensingh. — No. 8317L.A. — 5th April 1937.—Whereas it appears to the Governor that land is required to be taken by Government at the expense of the district board, Mymensingh, for a public purpose, viz., for approach road to the public ferry ghat at Killatajpur from Shahaganj Bazar, in the village of Panchkahania, jurisdiction list No. 70, in thana Iswarganj, pargana Mymensingh, district Mymensingh, it is hereby declared that for the above purpose a piece of land comprising part of cadastral plots Nos. 2 and 6, and measuring, more or less, 0·113 of an acre, is required within the aforesaid village of Panchkahania.

This declaration is made, under the provisions of section 6 Act I of 1894, to all whom it may concern.

A plan of the land may be inspected in the office of the Collector of Mymensingh.

Burdwan.—No. 8326L.A.—5th April 1937.—Whereas it appears to the Governor that land is required to be taken by Government at the public expense for a public purpose, viz., for closing breaches in the Damodar left embankment in the 7th and 11th miles, in the villages of Mithapur, Sonda and Dadpur, jurisdiction list Nos. 115, 116 and 123, respectively, thana Galsi, pargana Bagha, district Burdwan, it is hereby declared that for the above purpose three pieces of land comprising cadastral survey plot No. 2605 and parts of cadastral survey plots Nos. 2593-2595, 2597, 2598, 2600-2604, 2606-2609, 2613, 2614, 2618 and 2619 in mauza Mithapur and parts of cadastral survey plots Nos. 761, 777, 792-798, 800, 807-814, 823, 824, 829-833, 865-871 and 873-875 in mauza Sonda in Block "A", cadastral survey plot No. 2188 and parts of cadastral survey plots Nos. 1924, 1926, 1927, 1930-1934, 1936, 1940-1951, 1966-1971, 2184, 2185, 2189 and 2190 in mauza Dadpur in Block "B", and parts of cadastral survey plot No. 1976 in mauza Dadpur in Block "C", and altogether measuring, more or less, 7·84 acres of land, are required within the aforesaid villages of Mithapur, Sonda and Dadpur.

This declaration is made, under the provisions of section 6 of Act I of 1894, to all whom it may concern.

A plan of the land may be inspected in the office of the Special Land Acquisition Officer, Burdwan, as well as in that of the Executive Engineer, Damodar Division, Calcutta.

Khulna.—No. 8329L.A.—5th April 1937.—Whereas it appears to the Governor that land is required to be taken by Government at the expense of the Khulna Municipality for a public purpose, viz., for the extension of the municipal office compound, in the village of Helatala, jurisdiction list No. 5, thana Khulna, pargana Hogla, district Khulna, it is hereby declared that for the above purpose a piece of land comprising part of cadastral plot No. 46, and measuring, more or less, 0·129 of an acre, is required within the aforesaid village of Helatala.

This declaration is made, under the provisions of section 6 of Act I of 1894, to all whom it may concern.

A plan of the land may be inspected in the office of the Collector of Khulna.

Faridpur.—No. 8367L.A.—5th April 1937.—Whereas it appears to the Governor that land is required to be taken by Government partly at the public expense and partly at the expense of the Managing Committee of the Birmohon High English School for a public purpose, viz., for the Birmohon High English School, in the village of East Maijpara, jurisdiction list No. 274, thana Kalkini, pargana Birmohon, district Faridpur, it is hereby declared that for the above purpose a piece of land comprising cadastral plots Nos. 878, 879, 880, 881, 1044, 1050, 1051 and 1053 and parts of plots Nos. 1045 and 1052, and measuring, more or less, 3·99 acres, is required within the aforesaid village of East Maijpara.

This declaration is made, under the provisions of section 6 of Act I of 1894, to all whom it may concern.

A plan of the land may be inspected in the office of the Subdivisional Officer of Madaripur.

Jurisdiction.

NOTIFICATION.

Mymensingh. — No. 7518Jur.—1st April 1937.—In exercise of the power conferred by sub-section (*1*) of section 8 of the Code of Criminal Procedure, 1898 (Act V of 1898) and in supersession of all previous notifications, relating to the area included within the

Jamalpur subdivision of the Mymensingh district and to the boundaries of that area, the Governor is pleased to declare that the limits of that subdivision shall include the local areas of the following police-stations:—

Police-station Jamalpur — Notifications No. 12827P., dated the 28th December 1914, and No. 1898Pl., dated the 20th June 1921.

Police-station Melandaha — Notifications No. 4682P., dated the 31st October 1913, No. 12828P., dated the 28th December 1914, and No. 1898Pl., dated the 20th June 1921.

Police-station Madarganj—Notifications No. 6676J., dated the 15th June 1906, and No. 4771Pl., dated the 23rd November 1931.

Police-station Dewanganj—Notifications No. 9568P., dated the 17th October 1914, and No. 1445Pl., dated the 1st April 1937.

Police-station Islampur—Notifications No. 9567P., dated the 17th October 1914, and No. 4647Pl., dated the 20th September 1928.

Police-station Sarishabari — Notifications No. 6676J., dated the 15th June 1906, No. 2318Pl., dated the 30th April 1928, No. 400Pl., dated the 21st January 1929, and No. 3782Pl., dated the 10th September 1929.

Police-station Sherpur—Notifications, dated 20th March 1867, published in *Calcutta Gazette*, dated the 20th March 1867, No. 121, dated the 1st October 1874, and No. 1720P.J., dated the 11th May 1918.

Police-station Sribardi—Notification No. 1720P.J., dated the 11th May 1918.

Police-station Nalitabari — Notifications, dated the 18th April 1890, No. 13901P., dated the 12th November 1817, and No. 1183P.J., dated the 16th March 1918.

Police-station Nokla — Notifications No. 13901P., dated the 12th November 1917, and No. 1183P.J., dated the 16th March 1918.

Cinchona.

NOTIFICATION.

Darjeeling. — No. 8040Cin. — 31st March 1937. — Mr. H. Thomas, Manager, Government Cinchona Plantation, Munsong, is allowed leave on average pay for six months and seven days, under rule 81(*b*)(*i*) of the Fundamental Rules from the 22nd April 1937 or any subsequent date on which he avails himself of it.

Excluded Area.

NOTIFICATIONS.

Chittagong Hill Tracts.— No. 7515E.A. — 24th March 1937.—In exercise of the power conferred by section 18 of the Chittagong Hill Tracts Regulation, 1900 (Regulation I of 1900), the Governor in Council is pleased to direct that the following amendments be made in the rules for administration of the Chittagong Hill Tracts framed under notification No. 123P.D., dated the 1st May 1900, as subsequently amended, namely:—

In rule 42B of the said rules—

(*i*) *Insert* the following *before* the word "labour" in the beginning of sub-rule (*1*):—

"Whenever voluntary labour on payment is not available,"

(*ii*) *Insert* the following as sub-rule (*15*) and *re-number* existing sub-rules (*15*) and (*16*) as sub-rules (*16*) and (*17*), respectively:—

(15) If any person employed under this rule shall be temporarily or permanently incapacitated by injury or sickness caused by reason of, and during, the service rendered, he may apply for compensation to the Deputy Commissioner, who, after such inquiries as he considers necessary, may order, subject to the approval of the Commissioner, an equitable compensation to be paid to such person for his incapacity by Government or by the Chief or headman, who has employed him. In assessing the compensation the Deputy Commissioner will consider to what extent, if any, the incapacity, sickness, or death of the person employed was due to contributory negligence on his part. If death should result, the compensation may be paid to the dependants of the person deceased in such proportion as the Deputy Commissioner thinks fit.

Darjeeling. — No. 8201E.A.—31st March 1937.—In exercise of the power conferred by clause (*a*) of section 76 of the Bengal Municipal Act, 1932 (Bengal Act XV of 1932), the Governor in Council is pleased to make the following rules with respect to municipalities in the district of Darjeeling:—

Rules regarding qualifications of Municipal Engineers, Overseers (including Sub-Overseers) and Accountants.

1. A candidate for first employment by the Commissioners as a Municipal Engineer shall possess one of the following qualifications, that is to say, he shall—

(*a*) (*i*) be at the time of seeking the employment, or have previously been, a member of the permanent establishment of the Public Works or Public Health Department in the grade of Executive, Assistant Executive or Assistant Engineer or Sub-Engineer or Supervisor or upper subordinate; or

(*ii*) hold the degree of Bachelor of Engineering of the Calcutta University or any of the degrees or diplomas which are declared by the Public Works Department to be equivalent to the B.E. degree of the Calcutta University for the purpose of direct appointment to the Bengal Engineering Service of that Department; or

(*iii*) be a Licentiate of Engineering of an Indian University, or have passed the final examination of the Engineering Department of the Civil Engineering Colleges at Sibpur, Roorkee, Poona or Madras or any other equivalent examination; or

(*iv*) hold the Associateship or Diploma of the Board of Apprenticeship Training; or

(*v*) have served an apprenticeship of not less than three years in the United Kingdom with some recognised firm of Civil Engineers of high standing; and

(*b*) produce evidence that he has held charge of important works for not less than five years and shall produce a certificate from his immediate superior during such employment that his conduct and work were satisfactory. The candidate shall also produce evidence that his knowledge of the vernacular is such as to qualify him for employment as a Municipal Engineer.

2. A candidate for employment by the Commissioners as an overseer shall possess one of the following qualifications, that is to say, he shall hold—

(*a*) the Overseer Certificate or the P. W D. Honours grade certificate of the Overseer Examination Board; or

(*b*) the Associateship or Diploma or the Apprenticeship Certificate of the Board of Apprenticeship Training; or

(*c*) a certificate from the Principal, Bengal Engineering College, Sibpur, or the Head Master, Dacca School of Engineering (now styled Principal, Ahsanulla School of Engineering, Dacca), that prior to 1909 the candidate passed the annual examination held at the end of three-and-a-half years of the courses for apprentices, and that he possesses the qualifications of a third grade overseer in the Public Works Department; or

(*d*) a certificate from the Principal, Bengal Engineering College, that prior to 1909 the candidate passed the second year examination of the Engineering Department of that College; or

(*e*) a certificate from the Principal, Bengal Engineering College, that he passed the Intermediate Examination in Engineering of the Calcutta University and that he qualified in the College workship tests of the first and second years.

3. A candidate for employment by the Commissioners as a sub-overseer shall possess one of the following qualifications, that is to say, he shall hold—

(*a*) a Sub-Overseer Certificate of the Overseer Examination Board; or

(*b*) the Associateship or Diploma or the Apprenticeship Certificate of the Board of Apprenticeship Training; or

(*c*) a certificate from the Principal, Bengal Engineering College, or the Principal, Bihar School (now styled College) of Engineering, that prior to 1909 the candidate passed the annual examination held at the end of the second year of the course for apprentices or a certificate from the Head Master, Dacca School of Engineering (now styled Principal, Ahsanulla School of Engineering, Dacca), that prior to 1909 he passed the final examination at the end of the third year of the course for sub-overseers, and that he possesses the qualification required of a sub-overseer in the Public Works Department; or

(*d*) a certificate from the Head Master, Dacca School of Engineering (now styled Principal, Ahsanulla School of Engineering, Dacca), that prior to 1915 he passed the final examination held at the end of the second year course.

4. A candidate for employment by the Commissioners as a subordinate on the staff of a Municipal Engineer who already holds a similar appointment under another municipality or under a district board need not bring evidence of the qualifications specified in the foregoing rules, but shall produce a certificate of approved service from the Chairman of the municipality or district board under whom he has been employed.

5. A candidate for employment by the Commissioners as an accountant shall hold certificate that he has passed the Bengal Local Bodies Accountant's Examination or the examination prescribed in paragraph 98 and Appendix 3 (with the exception specified therein) of the Public Works Account Code (first edition):

Provided that this rule shall not apply to a municipality with an average income of less than Rs. 20,000 per annum.

Explanation.—The average income should be computed from the actuals of the last three years.

6. Notwithstanding anything contained in these rules, the Commissioners may appoint to act as a Municipal Engineer, as an overseer or sub-overseer or as an accountant for a period not exceeding four months, any person who, though not qualified under these rules to hold any such appointment permanently, is, in the opinion of the Commissioners, sufficiently well acquainted with the duties of the appointment to be able to perform them efficiently for the period of the vacancy.

J. B. KINDERSLEY,

Secy. to the Govt. of Bengal (offg.).

FOREST AND EXCISE DEPARTMENT.

Forests.

NOTIFICATION.

Dacca-Mymensingh. — No. 8192For.—2nd April 1937.—Whereas the land described in the schedule below was declared to be Protected Forest under section 38 of the Indian Forest Act, 1927 (XVI of 1927), under notification No. 38For., dated the 12th January 1934, and as the proprietors desire that the land should be released so in exercise of the power conferred by section 38 of the said Act and in modification of so much of the said notification as relates to the said land, the Governor is pleased to direct that the forest shown in the said schedule shall cease to be Protected Forest and the provisions of the Act referred to in the said notification shall cease to apply to the said land, with effect from the date of this notification—

Schedule.

Name of mauza.	Jurisdiction list No.	Survey plot No.	Area in acres.
Sripur, police-station Sripur.	43	844/2223	·40

Local boundary—

North—Survey plots Nos. 847, 855.
South—Survey plot No. 846.
East—Survey plots Nos. 2222, 2224.
West—Survey plot No. 846.

Excise.

NOTIFICATIONS.

No. 8332Ex.—1st April 1937.—In exercise of the powers conferred by sub-section (2) of section 28 of the Bengal Tobacco (Sales Licensing) Act, 1935 (Bengal Act XIV of 1935), the Governor of Bengal is pleased to direct that the following amendment shall be made in the rules, published under notification No. 1894S.R., dated the 12th August 1935, namely:—

In rule 24 *for* the words "Local Government" *substitute* the words "Tribunal constituted under section 296(2) of the Government of India Act, 1935."

No. 8333Ex.—1st April 1937.—In exercise of the powers conferred by section 85 of the Bengal Excise Act, 1909 (Bengal Act V of 1909), the Governor of Bengal is pleased to direct that the following amendments shall be made in the rules published under notification No. 595S.R., dated the 30th March 1915, as subsequently amended, namely:—

Amendments.

1. In rule 4 of the said rules *for* the words "Local Government" *substitute* the words "Tribunal constituted under section 296 (2) of the Government of India Act, 1935".

2. In clause (2) of rule 6 of the said rules *for* the words "Local Government", "Government of Bengal in the Agriculture and Industries Department", and "Governor in Council" *substitute* the words "Tribunal constituted under section 296(2) of the Government of India Act, 1935" in each case.

No. 8334Ex.—1st April 1937.—In exercise of the powers conferred by section 5 of the Opium Act,1878 (I of 1878), the Governor of Bengal is pleased to direct that the following amendments shall be made in the rules published under notification No. 562S.R., dated the 2nd March 1918, as subsequently amended, namely:—

Amendments.

1. In clauses (2) and (3) of rule 75 of the said rules *for* the words "Local Government" wherever they occur, *for* the words "Government of Bengal in the Agriculture and Industries Department", and *for* the words "Governor in Council" *substitute* the words "Tribunal constituted under section 296(2) of the Government of India Act, 1935" in each case.

2. In rule 76 of the said rules *for* the words "Local Government" *substitute* the words "Tribunal constituted under section 296(2) of the Government of India Act, 1935".

J. B. KINDERSLEY,

Secy. to the Govt. of Bengal (offg.).

Orders by the Commissioner of Excise and Salt, Bengal.

No. 100Exc.—30th March 1937.—Maulvi Amir Hussain, Inspector of Excise and Salt, is, on the expiry of his leave, posted to Calcutta as a Matches Preventive Inspector in the public interest.

D. MACPHERSON,

Commr. of Excise and Salt, Bengal (offg.).

BOARD OF REVENUE, BENGAL.

NOTIFICATIONS.

Khulna-Jessore-Nadia.—No. 4962C.P.—25th March 1937.—In exercise of the powers conferred by clause (2) of section 8 of the Bengal Land Revenue (Assistant Collectors) Regulation, 1821 (IV of 1821), the Board of Revenue authorises Maulvi Saiyid Fazlur Rahaman, Settlement Kanungo, who has been placed on duty in connection with the maintenance, for the purposes of section 158A of the Bengal Tenancy Act, 1885, of the record-of-rights of the estates of late Srimati Krishna Pramada Dasi in the district of Khulna, Babu Santimoy Roy Choudhury in the district of Jessore and of late Srimati Krishna Pramada Dasi in the district of Nadia, to exercise and perform within the local limits of the said estates any of the powers and duties vested in the Collectors of Land Revenue under any enactment in force therein for the purpose of the said work of maintenance of the record-of-rights.

Chittagong.—No. 4967C.P.—30th March 1937.—In exercise of the powers conferred by clause (2) of section 8 of the Bengal Land Revenue (Assistant Collectors) Regulation, 1821 (IV of 1821), the Board of Revenue authorises Babu Hiralal Karmakar, Settlement Kanungo, who has been placed on duty in connection with the maintenance, for the purposes of section 158A of the Bengal Tenancy Act, 1885, of the record-of-rights of the estates of Babu Kashi Mohan Sikdar and Maulvi Abdul Bari Choudhuri in the district of Chittagong, to exercise and perform within the local limits of the said estates any of the powers and duties vested in the Collectors of Land Revenue under any enactment in force therein for the purpose of the said work of maintenance of the record-of-rights.

Burdwan. — No. 4968C.P. — 30th March 1937.—In exercise of the powers conferred by clause (2) of section 8 of the Bengal Land Revenue (Assistant Collectors) Regulation, 1821 (IV of 1821), the Board of Revenue authorises Babu Surendra Nath Das Gupta, Settlement Kanungo, who has been placed on duty in connection with the maintenance, for the purposes of section 158A of the Bengal Tenancy Act, 1885, of the record-of-rights of the estate of Babu Bibhuti Bhusan Pal Choudhuri in the district of Burdwan, to exercise and perform within the local limits of the said estate any of the powers and duties vested in the Collectors of Land Revenue under any enactment in force therein for the purpose of the said work of maintenance of the record-of-rights.

S. BANERJEE,

Secy. to the Board of Revenue, Bengal.

BENGAL LEGISLATIVE ASSEMBLY.

NOTIFICATION.

No. 570L.A.—5th April, 1937.

Election by the members of the Bengal Legislative Assembly.

Notice in respect of the returns of election expenses published under the provisions of rule 9 of the Bengal Legislative Assembly and the Bengal Legislative Council Electoral (Election Expenses and Election Petitions) Rules, 1936.

	Name of the candidate.	Date on which the return of election expenses and the declarations have been lodged.
1.	Rai Radhika Bhusan Roy Bahadur ...	30th March, 1937.
2.	Mr. Narendra Chandra Datta ...	30th March, 1937.
3.	Dr. S. C. Roy ...	30th March, 1937.
4.	Khan Sahib Subid Ali Molla ...	31st March, 1937.
5.	Rai Ashutosh Ghosh Bahadur ...	31st March, 1937.
6.	Mr. Nagendra Narayan Ray ...	1st April, 1937.
7.	Mr. Abdul Ghani Chowdhury ...	1st April, 1937.
8.	Mr. Bhismadev Das ...	1st April, 1937.
9.	Mr. Abdul Hamid Mahammad ...	1st April, 1937.
10.	Mr. Nazibullah Sarder ...	1st April, 1937.
11.	Maulvi Abdus Salam ...	1st April, 1937.
12.	Mr. Amulyadhan Ray ...	1st April, 1937.
13.	Mr. Humayun Z. A. Kabir ...	2nd April, 1937.
14.	Rai Satyendra Kumar Das Bahadur ...	2nd April, 1937.
15.	Mr. Sachindra Narayan Sanyal ...	2nd April, 1937.
16.	Maulvi Abul Quasem ...	2nd April, 1937.
17.	Nawabzada Kamruddin Haider ...	2nd April, 1937.
18.	Mr. Bankim Chandra Datta ...	2nd April, 1937.
19.	Mr. Girindra Nath Ray Chowdhury ...	2nd April, 1937.
20.	Rai Dr. Harendra Nath Das Bahadur	3rd April, 1937.
21.	Mr. M. Shamsuzzoha ...	3rd April, 1937.
22.	Mr. Syed Md. Atiqullah ...	3rd April, 1937.
23.	Mr. Tahur Ahmed Chowdhury ...	5th April, 1937.
24.	Mr. Haridas Majumdar ...	5th April, 1937.
25.	Mr. Atul Chandra Bose ...	5th April, 1937.
26.	Khan Sahib Md. Akram ...	5th April, 1937.
27.	Mr. Syed Majid Baksh ...	5th April, 1937.
28.	Syed Muhammad Afzal ...	5th April, 1937.

The returns can be inspected in the office of the Secretary to the Bengal Legislative Assembly, Council House, Calcutta, on any working day between the hours of 11 a.m. and 3 p.m. on payment of the prescribed fee of Re. 1 only. Attested copies of the return or any part of it may be obtained from that office on payment of a fee of Rs. 2 only, for each copy.

K. ALI AFZAL, *Returning Officer.*

TREASURY NOTICES.

Suri, the 25th March 1937.

Babu Surendra Nath Banerjee, Sub-Deputy Collector, Suri, Birbhum, is temporarily placed in charge of the Birbhum Treasury, with effect from the 25th March 1937 and is authorised to draw bills on other treasuries, *vice* Babu Gopendra Kumar Ghosh Chaudhuri, Deputy Collector, granted leave.

A. H. M. ABDUL HYE, *Collector.*

Orders by the Deputy Accountant-General, Bengal.

The Treasury Buildings, the 3rd April 1937.

It is notified that the refund order book No. 466 containing 50 orders "Pink" is in use by the Income-Tax Office, Railways and Miscellaneous Salaries Circle, Calcutta, with effect from the 17th March 1937.

It is notified that the refund order book No. 760 containing 50 orders is in use by the Income-Tax Office, Central Salaries Circle, Calcutta, with effect from the 18th March 1937.

C. BHASKARAIYA,
Dy. Accountant-General, Bengal.

SHERIFF'S OFFICE.

The 11th March 1937.

Notice is hereby given that the Second Criminal Sessions of the year 1937 of the High Court of Judicature at Fort William in Bengal for the town of Calcutta and Factory of Fort William and the places subordinate thereto, will be held at the Court House, in the town of Calcutta, on Monday, the 3rd day of May 1937, at 11 o'clock in the forenoon, and thenceforward from day to day until the said sessions be over. And it is hereby proclaimed that all persons who are to prosecute any of the prisoners to be brought up for trial at the said sessions be present then and there to prosecute.

S. C. LAW, *Sheriff.*

সরিফ আফিস, সন ১৯৩৭ সালের ১১ই মার্চ্চ।

সকলকে সমাচার দেওয়া যাইতেছে যে, সুবে বাঙ্গালার ফোর্ট উইলিয়ম দুর্গের অধীনে সহর কলিকাতার ও অন্যান্য স্থানের ফৌজদারী বিচার নিষ্পত্তি জন্য আগামী সন ১৯৩৭ সালের ৩রা মে সোমবার বেলা ১১ ঘটিকার সময় এবং যে পর্য্যন্ত সেশিয়ানের কার্য্য সমাধা না হয়, প্রতিদিন উক্ত সময়ে কলিকাতার হাইকোর্টের আপন আদালত ঘরে সন ১৯৩৭ সালের দ্বিতীয় ক্রিমিন্যাল সেশিয়ান বসিবেক, এবং এতদ্বারা প্রচার করা যাইতেছে যে, যে সকল ব্যক্তি কোন কয়েদীর বিরুদ্ধে কোন ফৌজদারী মিছিল করিবেক, তাহারা উক্ত স্থানে উক্ত সময়ে হাজির থাকিয়া মোকদ্দমা করে। ইতি।

এস্, সি, লাহা,
সরিফ।

ORDERS BY THE HIGH COURT OF JUDICATURE AT FORT WILLIAM IN BENGAL.

Appointments and Transfers.

Faridpur.—No. 3944A. —3rd April 1937. — Babu Bijayesh Mukharji, probationary munsif, Faridpur, is appointed temporarily to be an additional munsif in the same district, to be employed in the first instance at Bhanga and thereafter at Gopalganj and Goalundo.

Powers.

Pabna-Bogra. — No. 3955A.—3rd April 1937.—Babu Aditya Chandra Datta, munsif, under orders of transfer to Serajganj, in the district of Pabna and Bogra, is vested under section 19, sub-section (2) of the Bengal, Agra and Assam Civil Courts Act, 1887 (XII of 1887), as amended by the Decentralization Act, 1914 (IV of 1914), with powers to try, under the ordinary procedure, original suits up to the value of Rs. 2,000 arising within the local limits of the Serajganj munsifi.

Burdwan.—No. 3958A.—3rd April 1937.—Babu Banku Bihari Bhaduri, munsif of Burdwan (Sadar), is vested under section 19, sub-section (2) of the Bengal, Agra and Assam Civil Courts Act, 1887 (XII of 1887), as amended by the Decentralization Act, 1914 (IV of 1914), and the Bengal, Agra and Assam Civil Courts (Bengal Amendment) Act, 1935, with powers to try, under the ordinary procedure, original suits up to the value of Rs. 3,500 arising within the local limits of the original jurisdiction of the District Judge, Burdwan.

Pabna-Bogra. — No. 3961A.—3rd April 1937.—Babu Aditya Chandra Datta, munsif, under orders of transfer to Serajganj, in the district of Pabna and Bogra, is vested with the powers of a Judge of a Court of Small Causes for the trial of suits cognizable by such a Court up to the value of Rs. 300 within the local limits of the Serajganj munsifi.

N. L. HINDLEY,
Registrar, Appellate Side (offg.).

ORDERS BY COMMISSIONERS OF DIVISIONS.

Burdwan Division—Chinsura.

No. 777L.S.-G.—31st March 1937.—It is hereby notified for general information that the following classification of the ferries under the Bankura district board as framed by the Board under section 15 of the Bengal Ferries Act, 1885, is confirmed:—

Sadar subdivision.

1. Mejhia ferry on the 4th mile of Raniganj Midnapore road. Class I. Three boats

carrying 60 passengers each and a flat raft for ferrying cars and other vehicles. Boats to be supplied by the lessees. All the rules under section 15, Act I of 1885, for the district of Bankura, will be complied with.

2. Durgapur ferry on the 12th mile of Beliatore Durgapur road. Class I. Two boats carrying 60 passengers each. Boats to be supplied by the lessees. All the rules under section 15, Act I of 1885, for the district of Bankura, will be complied with.

3. Simly ferry on the 2nd mile of Raipur Chandrakona road. Class II. One boat carrying 40 passengers. Boats to be supplied by the lessees. All the rules under section 15, Act I of 1885, for the district of Bankura, will be complied with.

4. Chiltore ferry on the 35th mile of Bankura Raipur road. Class II. One boat carrying 40 passengers. Boats to be supplied by the lessees. All the rules under section 15, Act I of 1885, for the district of Bankura, will be complied with.

5. Patakola ferry on the 2nd mile of Bankura Raipur road. Class II. One boat carrying 40 passengers. Boats to be supplied by the lessees. All the rules under section 15, Act I of 1885, for the district of Bankura, will be complied with.

6. Kechonda ferry on the 5th mile of Khatra Raniband road. Class III. One boat carrying 20 passengers. District board boat. All the rules under section 15, Act I (B.F.) of 1885, for the district of Bankura, with exception of rules 11 and 18, will be complied with.

7. Bhadul ferry (Surpanagore) on the 32nd mile of Ranigunj Midnapore road. Class III. One boat carrying 20 passengers. District board boat. All the rules under section 15, Act I (B.F.) of 1885, for the district of Bankura, with exception of rules 11 and 18, will be complied with.

8. Suknibansa ferry on the 2nd mile of Bankura Purulia road. Class III. One boat carrying 20 passengers. District board boat. All the rules under section 15, Act I (B.F.) of 1885, for the district of Bankura, with exception of rules 11 and 18, will be complied with.

9. Baharamuri ferry on the 16th mile of Bankura Khatra road. Class III. One boat carrying 20 passengers. District board boat. All the rules under section 15, Act I (B.F.) of 1885, for the district of Bankura, with exception of rules 11 and 18, will be complied with.

10. Beliatore ferry on the 2nd mile of Beliatore Durgapur road. Class III. One boat carrying 20 passengers. District board boat All the rules under section 15, Act I (B.F.) of 1885, for the district of Bankura, with exception of rules 11 and 18, will be complied with.

11. Simlapal ferry on the 24th mile of Bankura Raipur road. Class III One boat carrying 20 passengers. District board boat. All the rules under section 15, Act I (B.F.) of 1885, for the district of Bankura, with exception of rules 11 and 18, will be complied with.

12. Taldangra ferry on the 17th mile of Bankura Raipur road. Class III One boat carrying 20 passengers. District board boat. All the rules under section 15, Act I (B.F.) of 1885, for the district of Bankura, with exception of rules 11 and 18, will be complied with.

13. Paika ferry on the 2nd mile of Ratanpur Harmasra road. Class III. One boat carrying 20 passengers. District board boat All the rules under section 15, Act I (B.F.) of 1885, for the district of Bankura, with exception of rules 11 and 18, will be complied with.

Vishnupur subdivision.

1. Rangametia ferry on the 4th mile of Panagar Vishnupur road. Class II. Three boats carrying 40 passengers each. Boats to be supplied by the lessees. All the rules under section 15, Act I of 1885, for the district of Bankura, will be complied with.

2. Jasodakhal ferry on the 25th mile of Panagar Vishnupur road. Class II. Two boats carrying 20 passengers each. Boats to be supplied by the lessees. All the rules under section 15, Act I of 1885, for the district of Bankura, will be complied with.

3. Nagardanga ferry on the 10th mile of Panagar Vishnupur road. Class III. One boat carrying 20 passengers. District board boat. All the rules under section 15, Act I (B.F.) of 1885, for the district of Bankura, with exception of rules 11 and 18, will be complied with.

4. Chhilimpur ferry on the 2nd mile of Vishnupur Balsi road. Class III. One boat carrying 20 passengers. District board boat. All the rules under section 15, Act I (B.F.) of 1885, for the district of Bankura, with exception of rules 11 and 18, will be complied with.

5. Ajodhya ferry on the 3rd mile of Ramsagore Radhanagore road. Class III. One boat carrying 20 passengers. District board boat. All the rules under section 15, Act I (B.F.) of 1885, for the district of Bankura, with exception of rules 11 and 18, will be complied with.

6. Pendrokhal ferry on the 27th mile of Panagar Vishnupur road. Class III. One boat carrying 20 passengers. District board boat. All the rules under section 15, Act I (B.F.) of 1885, for the district of Bankura, with exception of rules 11 and 18, will be complied with.

7. Sanpura ferry on the 6th mile of Indus Katulpur road. Class III One boat carrying 20 passengers. District board boat. All the rules under section 15, Act I (B.F.) of 1885, for the district of Bankura, with exception of rules 11 and 18, will be complied with

8. Jujghati ferry on the 28th mile of Panagar Vishnupur road. Class III. One boat carrying 20 passengers. District board boat. All the rules under section 15, Act I (B.F.) of 1885, for the district of Bankura, with exception of rules 11 and 18, will be complied with.

9. Ramsagore ferry (Berai) on the 47th mile of Ranigunj Midnapore road. Class III One boat carrying 20 passengers. District

board boat. All the rules under section 15, Act I (B.F.) of 1885, for the district of Bankura, with exception of rules 11 and 18, will be complied with.

10. Harinmurikhal ferry on the 22nd mile of Panagar Vishnupur road. Class III. One boat carrying 20 passengers. District board boat. All the rules under section 15, Act I (B.F.) of 1885, for the district of Bankura, with exception of rules 11 and 18, will be complied with.

No. 780L.S.-G. — 31st March 1937.—In exercise of the powers conferred on me by section 19 (*2*) of the Bengal Local Self-Government Act (Act III B. C. of 1885), and acting under the orders of the Local Government given in the exercise of the administrative control vested in them by section 29B of the Act, I hereby appoint Mr. J. A. Powel to be a member of the Burdwan district board in the district of Burdwan, *vice* Mr. P. S. Keelan, C.I.E., resigned.

O. M. MARTIN, *Commissioner.*

Howrah, the 18th March 1937.

It is hereby notified for general information that, under section 13 of the Bengal Village Self-Government Act, 1919 (Bengal Act V of 1919), read with rule 36 of the rules for election and appointment of members of union boards, Babu Jyoti Prosad Agarwala has been appointed as a member of Lillooah union board in police-station Bally in the Sadar subdivision of the district of Howrah, *vice* Pandit Gopal Ram Pathak, deceased.

N. V. H. SYMONS, *District Magistrate.*

Bankura, the 22nd March 1937.

It is hereby notified for general information that, under section 13 of the Bengal Village Self-Government Act, 1919 (Bengal Act V of 1919), read with rule 35 of the rules for election and appointment of members of union boards, Babu Jyotindra Mohan Chakravarty has been elected as a member of Layek Bandh union board in police-station Vishnupur in the Vishnupur subdivision of the district of Bankura, *vice* Babu Ramgati Chakravarty, deceased.

It is hereby notified for general information that, under section 13 of the Bengal Village Self-Government Act, 1919 (Bengal Act V of 1919), read with rule 36 of the rules for election and appointment of members of union boards, Munshi Ebrahim Khan has been appointed under section 6 (*4*) of the Act as a member of Belsulia union board in police-station Vishnupur in the Vishnupur subdivision of the district of Bankura, *vice* Babu Pramatha Nath Roy, deceased.

Bankura, the 23rd March 1937.

No. 3067J.—It is hereby notified for general information that, under section 13 of the Bengal Village Self-Government Act, 1919 (Bengal Act V of 1919), read with rule 36 of the rules for election and appointment of members of union boards, Babu Bibhuty Bhusan Chakravartty has been appointed as a member of Nabasan union board in police-station Sonamukhi in the Vishnupur subdivision of the district of Bankura, *vice* Babu Sashi Bhusan Roy, deceased.

J. M. CHATARJI, *District Magistrate.*

Birbhum, the 30th March 1937.

No. 15L.S.-G.—It is hereby notified for general information that, under section 13 of the Bengal Village Self-Government Act, 1919 (Bengal Act V of 1919), read with rule 35 of the rules for the election and appointment of members of union boards, etc., Babu Gopal Chandra Bandopadhya has been duly elected to be a member of Ward No. II of the Gangmuri union board in Rajnagore police-station in the Sadar subdivision of the district of Birbhum, *vice* Babu Ram Ranjan Ghosh, deceased.

Birbhum, the 3rd April 1937.

No. 11L.S.-G.—It is hereby notified for general information that, under section 13 of the Bengal Village Self-Government Act, 1919 (Bengal Act V of 1919), read with rule 35 of the rules for the election and appointment of members of the union boards, etc., Babu Jagabandhu Bannerji has been duly elected to be a member of Ward No. I of the Kurumgram union board in Nalhati police-station in Rampurhat subdivision of the district of Birbhum, *vice* Babu Jatindra Nath Ghoshal, deceased.

D. N. BANNERJI, for *District Magistrate.*

Chinsura, the 30th March 1937.

No. 2892J.G.—It is hereby notified for general information that, under section 13 of the Bengal Village Self-Government Act, 1919 (Bengal Act V of 1919), read with rule 35 of the rules for the election and appointment of members of union boards, etc., Maulvi Ichahuque Molla has been duly elected to be a member for Ward No. II of the Jejur union board in police-station Haripal, in the Serampore subdivision of the district of Hooghly, *vice* Babu Priya Brata Bose, resigned.

S. P. GHOSH, *District Magistrate.*

Burdwan, the 15th March 1937.

No. 1615R.E. — It is hereby notified that Babu Saileswar Singh Roy, an unsuccessful candidate for the election from Burdwan North-West General Rural Constituency of the Bengal Legislative Assembly, has on the 6th day of March 1937 filed his return of election expenses as required by rule 7, clauses (*1*) and (*2*) of the Bengal Legislative Assembly and Bengal Legislative Council Electoral (Election Expenses and Election Petitions)

Rules, 1936. These can be inspected in the office of the undersigned at Burdwan on payment of a fee of Re. 1 between the hours of 11 a.m. and 3 p.m. on week days for one week from publication of this notice in the Gazette or from 18th March 1937, whichever is later.

Any person may obtain attested copies of the return or declaration or any part thereof on payment of a fee of rupees two for each copy.

S. DUTT, *Returning Officer and District Magistrate.*

Vishnupur, the 22nd March 1937.

Under rule 9 of the Bengal Legislative Assembly and the Bengal Legislative Council Electoral (Election Expenses and Election Petitions) Rules, 1936, it is notified for general information that Babu Bhutnath Koley, a candidate for the seat in the Bankura East Rural (General) Constituency of the Bengal Legislative Assembly, has filed in my office the return of election expenses and declarations on the 20th March 1937. This return is open to inspection in the office of the Subdivisional Officer, Vishnupur, district Bankura, on any working day between the hours of 11 a.m. and 5 p.m. on payment of a fee of Re. 1. Attested copy of the return or any part thereof may be obtained on payment of a fee of Rs. 2 for each copy.

S. N. CHATTERJEE, *Returning Officer (Subdivisional Officer).*

Bankura, the 23rd March 1937.

It is hereby notified that Babu Jugal Mondal, an accepted candidate for the election from the Bankura West Rural (General) Constituency of the Bengal Legislative Assembly, has filed on the 8th March 1937 his return of election expenses and the declarations in respect thereof, as required under sub-rules (*1*) and (*2*) of rule 7 of the Bengal Legislative Assembly and the Bengal Legislative Council Electoral (Election Expenses and Election Petitions) Rules, 1936. These can be inspected in the office of the District Magistrate, Bankura, on payment of a fee of one rupee between the hours of 11 a.m. and 5 p.m. for a week from the publication of the notice in the *Calcutta Gazette.*

2. Any person may, on payment of a fee of Rs. 2 for each copy, obtain attested copies of the return or declarations or any part thereof.

M. ALI, *Sadar Subdivisional Magistrate (Returning Officer).*

Bankura, the 23rd March 1937.

It is hereby notified that Babu Monmohan Das, an accepted candidate for the election from the Bankura West Rural (General) Constituency of the Bengal Legislative Assembly, has filed on the 9th March 1937 his return of election expenses and the declarations in respect thereof, as required under sub-rules (*1*) and (*2*) of rule 7 of the Bengal Legislative Assembly and the Bengal Legislative Council Electoral (Election Expenses and Election Petitions) Rules, 1936. These can be inspected in the office of the District Magistrate, Bankura, on payment of a fee of one rupee between the hours of 11 a.m. and 5 p.m. for a week from the publication of the notice in the *Calcutta Gazette.*

2. Any person may, on payment of a fee of Rs. 2 for each copy, obtain attested copies of the return or declarations or any part thereof.

M. ALI, *Sadar Subdivisional Magistrate (Returning Officer)*

Midnapore, the 25th March 1937.

It is hereby notified that Maulvi Osman Ali, a nominated candidate for the election from the Midnapore Muhammadan Constituency of the Bengal Legislative Assembly, has filed on 25th March 1937 his return of election expenses and the declarations in respect thereof, as required under sub-rules (*1*) and (*2*) of rule 7 of the Bengal Legislative Assembly and the Bengal Legislative Council Electoral (Election Expenses and Election Petitions) Rules, 1936. These can be inspected in the office of the District Magistrate, Midnapore, on payment of a fee of one rupee between the hours of 11 a.m. and 3 p.m. for a week from the publication of this notice in the *Calcutta Gazette* or from the 1st April 1937, whichever is later.

2. Any person may, on payment of a fee of Rs. 2 for each copy, obtain attested copies of the return or declarations or of any part thereof.

M. O. CARTER, *Returning Officer.*

Midnapore, the 30th March 1937.

It is hereby notified that Babu Prokash Chandra Saha, a nominated candidate for the election from the Jhargram-*cum*-Ghatal General (Rural) Constituency of the Bengal Legislative Assembly, has filed on 30th March 1937 his return of election expenses and the declarations in respect thereof, as required under sub-rules (*1*) and (*2*) of rule 7 of the Bengal Legislative Assembly and the Bengal Legislative Council Electoral (Election Expenses and Election Petitions) Rules, 1936 These can be inspected in the office of the District Magistrate, Midnapore, on payment of a fee of one rupee between the hours of 11 a.m. and 3 p.m. for a week from the publication of this notice in the *Calcutta Gazette*, or from the 8th April 1937, whichever is later.

2. Any person may, on payment of a fee of Rs. 2 for each copy, obtain attested copies of the return or declarations or of any part thereof.

M. O. CARTER, *Returning Officer.*

Chinsura, the 1st April 1937.

No. 3010J.G. — It is hereby notified that Babu Prasanna Kumar Das, a nominated candidate for election in respect of the seat reserved for the scheduled caste from the Hooghly North-East (Rural) General Constituency of the Bengal Legislative Assembly,

has filed on the 31st March 1937 his return of election expenses and declaration in respect thereof, as required under sub-rules (*1*) and (*2*) of rule 7 of the Bengal Legislative Assembly and the Bengal Legislative Council Electoral (Election Expenses and Election Petitions) Rules, 1936. These can be inspected in the office of the District Magistrate, Hooghly, Chinsura, on payment of Re. 1 only between the hours of 11 a.m. and 4 p.m. on the days the office is open, for a week from the publication of this notice in the *Calcutta Gazette* or from the 7th April 1937, whichever is later.

2. Any person may, on payment of a fee of Rs. 2 only for each copy, obtain attested copies of the returns or declarations or of any part thereof.

S. P. GHOSH, *Returning Officer.*

Chinsura, the 1st April 1937.

No. 3016J.G. — It is hereby notified that Maulvi A. M. A. Zaman, an accepted candidate for the election from the Hooghly-*cum*-Serampore (Registered Factories) Labour Constituency of the Bengal Legislative Assembly, has filed on the 30th March 1937 his return of election expenses and declaration in respect thereof, as required under sub-rules (*1*) and (*2*) of rule 7 of the Bengal Legislative Assembly and the Bengal Legislative Council Electoral (Election Expenses and Election Petitions) Rules, 1936. These can be inspected in the office of the District Magistrate, Hooghly, Chinsura, on payment of a fee of Re. 1 only between the hours of 11 a.m. and 4 p.m. on the days the office is open, for a week from the publication of this notice in the *Calcutta Gazette* or from the 7th April 1937, whichever is later.

2. Any person may, on payment of a fee of Rs. 2 only for each copy, obtain attested copies of the returns or declarations or of any part thereof.

S. P. GHOSH, *Returning Officer.*

Chinsura, the 1st April 1937.

No. 3026J.G. — It is hereby notified that Babu Arabindu Shaw of 4, Thakurdas Palit Lane, Calcutta, a candidate for election in respect of the seat reserved for the scheduled caste from the Hooghly North-East (Rural) General Constituency of the Bengal Legislative Assembly, who withdrew his candidature within the statutory period, has filed on the 20th March 1937 his return of election expenses and declaration in respect thereof, as required under sub-rules (*1*) and (*2*) of rule 7 of the Bengal Legislative Assembly and the Bengal Legislative Council Electoral (Election Expenses and Election Petitions) Rules, 1936. These can be inspected in the office of the District Magistrate of Hooghly, Chinsura, on payment of Re. 1 only between the hours of 11 a.m. and 4 p.m. on the days the office is open, for a week from the publication of this notice in the *Calcutta Gazette* or from the 7th April 1937, whichever is later.

2. Any person may, on payment of a fee of Rs. 2 only for each copy, obtain attested copies of the returns or declarations or of any part thereof.

S. P. GHOSH, *Returning Officer.*

Orders by the Deputy Inspector-General of Police, Burdwan Range.

Chinsura.—No. 2278.—26th March 1937.—Sergeant J. T. Ogleby of Asansol, Burdwan, is appointed to act as Armed Inspector, Bankura, *vice* Mr. A. Whelan, officiating Inspector, Bankura, temporarily transferred to Darjeeling to fill the appointment sanctioned in G. O. No. 8952F., dated the 15th July 1916.

J. M. MACKENZIE,
Deputy Inspector-General of Police (offg.).

Chittagong Division—Chittagong.

No. 1836G.—26th March 1937.—Maulvi Akbar Husain Ahmed, Sub-Deputy Collector, on leave, who has been posted to the Chittagong Division in Government notification No. 3214A., dated the 20th March 1937, is posted to the Cox's Bazar subdivision of the Chittagong district for employment on general duty.

No. 1924G.—30th March 1937.—In exercise of the power conferred by sub-section (*2*) of section 3 of the Bengal Agricultural Debtors Act, 1935 (Bengal Act VII of 1936), delegated to Commissioners by Government notification No. 10105-8L.R., dated the 14th July 1936, the undersigned is pleased to appoint the following persons to be Chairmen and members respectively of the undermentioned Debt Settlement Boards in the district of Tippera for a term of three years with effect from the date of this notification:—

Chandpur subdivision.

Bishnupur Debt Settlement Board.

Maulvi Abdul Hafej Chaudhury, Member and Chairman.

Members.

Babu Prasanna Kumar Sarkar.
Babu Haradhan Chakrabatty.
Maulvi Fazar Ali Dhali.
Babu Kunja Mohan Poddar.

Nandalalpur Debt Settlement Board.

Maulvi Ahmed Sircar, Member and Chairman.

Members.

Maulvi Belatali Sircar.
Babu Mathura Mohan Pal.
Babu Mohini Mohon Sircar.
Maulvi Ramijuddin.

Silandia Debt Settlement Board.

Babu Sarada Mohan Roy, Member and Chairman.

Members.

Babu Ambika Charan Mazumder.
Maulvi Hayat Khan.
Maulvi Abdul Gani Sirkar.
Maulvi Jelaluddin Ahmed.

Char Nilkamal Debt Settlement Board.

Maulvi Ali Hossain Miah, Member and Chairman.

Members.

Maulvi Montazuddin.
Babu Pyari Mohon Roy.
Babu Harmohan Das.
Maulvi Hazi Auyab Ali.

Algi-Durgapur Debt Settlement Board.

Babu Hari Mohon Roy, Member and Chairman.

Members.

Babu Srinath Dey.
Maulvi Khalilur Rahaman.
Babu Tarini Charan Sarkar.
Maulvi Sayed Ali.

Kalipura Debt Settlement Board.

Maulvi Gazuafar Ali Sircar, Member and Chairman.

Members.

Babu Surendra Kumar Roy Chowdhury.
Babu Jatindra Mohon Talukdar.
Maulvi Roshanali Sarkar.
Maulvi Abdul Jalil Dhali.

Durgapur Debt Settlement Board.

Maulvi Md. Abid Chowdhury, Member and Chairman.

Members.

Maulvi Md. Abbachali Mian.
Babu Durgacharan Prodhania.
Maulvi Arabali Sarkar.
Babu Hari Prosonna Mojumder.

Nasirarkandi Debt Settlement Board.

Babu Krishna Hari Dewan, Member and Chairman.

Members.

Maulvi Md Idris Mia.
Maulvi Md. Ibrahim.
Babu Krishna Chandra Sarkar.
Maulvi Abdul Samad Sarkar.

Daserhat Debt Settlement Board.

Maulvi Mafizuddin Master, Member and Chairman.

Members.

Babu Judhisthir Haldar.
Babu Hari Charan Roy.
Maulvi Mafizuddin Sircar.
Maulvi Sultan Baksha Sircar.

Charkalia Debt Settlement Board.

Babu Monmohan Mukhuti, Member and Chairman.

Members.

Maulvi Ahmedali Sarkar.
Maulvi Abul Hosan.
Maulvi Golam Hossain Meah.
Babu Raj Chandra Roy.

Narayanpur Debt Settlement Board.

Babu Ananda Kumar Chowdhury, Member and Chairman.

Members.

Babu Ram Kani Bhowmick.
Maulvi Maniruddin Khan.
Maulvi Anwarali Sirkar.
Maulvi Abdul Rahim Mazumder.

Gazra Debt Settlement Board.

Babu Anukul Chandra Guha, Member and Chairman.

Members.

Maulvi Serazuddin Sircar.
Babu Lokenath Talukdar.
Maulvi Elahibaksha Sircar.
Maulvi Lafteali Sircar.

Faridganj Debt Settlement Board.

Maulvi Mahabbat Ali Patwari, Member and Chairman.

Members.

Babu Bepin Chandra De.
Babu Purna Chandra Deb.
Maulvi Abdul Wahab Patwari.
Maulana Aminul Hoque.

Bitra Debt Settlement Board.

Maulvi Afsaraddin Mollah, Member and Chairman.

Members.

Maulvi Abdul Karim Prodhania.
Maulvi Momtajuddin Ahamed.
Maulvi Abdul Goffur Sikdar.
Babu Ramesh Chandra Banikya.

Chardukhia Debt Settlement Board.

Maulvi Haji Anwarulla Patwari, Member and Chairman.

Members.

Maulvi Siddiqueulla Jamadar.
Maulvi Haji Hakimaddin Miji.
Maulvi Maniruddin Merdha.
Aditya Chandra Nath.

No. 1929G.—31st March 1937.—It is hereby notified for general information that, under section 19 (1) of the Bengal Local Self-Government Act (Bengal Act III of 1885), as modified up to 1st September 1933, Maulvi Hussain Ali Matbar, a member of the Cox's Bazar local board in the district of Chittagong, has been duly elected to be a member of the district board of Chittagong by the Cox's Bazar local board, in place of Khan Sahib Maulvi Muzaffar Ahmad Chaudhuri, deceased.

Erratum.—No. 1986G.—2nd April 1937. — In the notification No. 186G., dated the 10th January 1937, published at pages 137-39 of the *Calcutta Gazette* of the 21st January 1937 at page 138 of the Gazette, under "Bigha Debt Settlement Board" *for* "Babu Kailash Chandra Gupta Sarma" *read* "Babu Kailash Chandra Sen Sarma".

No. 1989G.—2nd April 1937.—In exercise of the power conferred by sub-section (2) of section 3 of the Bengal Agricultural Debtors Act, 1935 (Bengal Act VII of 1936), delegated to Commissioners by Government notification No. 10105-8L.R., dated the 14th July 1936, the undersigned is pleased to appoint the following persons to be Chairman and members of the undermentioned Debt Settlement Board in the district of Noakhali for a term of three years with effect from the date of this notification:—

Feni subdivision.

Purbachandrapur Debt Settlement Board.

Maulvi Wahiduddin Ahmad, Member and Chairman.

Members.

Maulvi Naderazzaman Amin.
Babu Nishi Chandra Bhowmik.
Maulvi Tafazzal Husain.

J. D. V. HODGE, *Commissioner.*

Chittagong, the 1st April 1937.

It is hereby notified under rule 9 of the Bengal Legislative Assembly and the Bengal Legislative Council Electoral (Election Expenses and Election Petitions) Rules, 1936, for general information that Maulvi Abul Basar Md. Shayesta Khan, who was duly nominated for election to the Bengal Legislative Assembly from the Chittagong Landholders' Constituency but who withdrew his candidature within the prescribed time, lodged his return of election expenses and declaration with the undersigned on the 30th March 1937.

The return and the declaration can be inspected in the office of the Commissioner, Chittagong Division, on payment of a fee of rupee one between the hours of 11 a.m. and 5 p.m. on office days, and attested copies thereof or of any part thereof can be obtained on payment of a fee of Rs. 2 for each copy.

S. C. MAITRA, *Personal Assistant to Commissioner, authorised to perform the functions of Returning Officer.*

Noakhali, the 30th March 1937.

No. 2628J.—It is hereby notified for general information that, under section 13 of the Bengal Village Self-Government Act (Act V of 1919), read with rule 35 of the rules for election and appointment of members of union boards, Maulvi Easin Molla, son of late Tamijuddin Molla, of village Karimpur, post office Sudharam, has been elected to be a member from Ward I of the Ewazhalia union board No. IV in police-station Sudharam in the Sadar subdivision of the district of Noakhali, *vice* Maulvi Tabarak Ali Munshi, deceased.

R. K. MITRA, *District Magistrate.*

Comilla, the 31st March 1937.

No. 3831M.—It is hereby notified for general information that, under section 13 of the Bengal Village Self-Government Act, 1919, read with section 6 (4) and rule 36 of the rules for the election and appointment of members of union boards, Babu Suresh Chandra Deb, Kaviraj, and Babu Hari Charan Roy have been appointed as members of the Fandauk union board No. VII of Nasirnagar police-station in the Brahmanbaria subdivision of the district of Tippera, *vice* Babu Satish Chandra Datta Chowdhuri and Babu Gadadhar Das Chowdhuri, removed.

J. P. RAY, *Addl. District Magistrate.*

Tippera, the 1st April 1937.

Under rule 9 of the Bengal Legislative Assembly Electoral (Election Expenses and Election Petitions) Rules, 1936, Abdul Majid, a duly nominated member of the Tippera North-East Muhammadan Rural Constituency of the Bengal Legislative Assembly, has lodged in my office the return of election expenses and declarations on 25th March 1937. Anybody can inspect it in the District Magistrate's office, Comilla, on any working day between 11 a.m. and 5 p.m. on payment of a fee of Re. 1 and is entitled to get a copy of any part thereof on payment of a fee of Rs. 2 for each copy.

J. C. CHAUDHURI, for *Returning Officer (District Magistrate).*

Chandpur, the 3rd April 1937.

Under rule 9 of the Bengal Legislative Assembly and Bengal Legislative Council Electoral (Election Expenses and Election Petitions) Rules, 1936, the return of election expenses and the declarations made in respect thereof have been lodged with me by the nominated candidates noted below on the dates noted against each. They may be inspected in my office between 2 and 4 p.m. every day

by any person on payment of a fee of one rupee and attested copies thereof or any part thereof will be issued on payment of a fee of Rs. 2 for each copy—

Matlab Bazar Muhammadan Rural Constituency.

1. Bazlul Karim Choudhury—12th March 1937.
2. Mafizuddin Sarkar *alias* Lal Mia—15th March 1937.

M. A. T. IYENGAR, *Returning Officer (Subdivisional Officer).*

Orders by the Deputy Inspector-General of Police, Bakarganj Range.

Barisal.—No. 1443.—1st April 1937.—Babu Nagendra Bihari Basu, Court Inspector, Tippera, is granted 1 month and 27 days' leave on average pay, under rule 81(*b*)(*ii*) of the Fundamental Rules, with effect from the 4th May 1937.

G. H. MANNOOCH,
Deputy Inspector-General of Police (offg.).

Dacca Division—Dacca.

No. 991R.—22nd March 1937.—In exercise of the powers delegated to me by Government notification No. 10106L.R., dated the 14th July 1936, and with reference to notification No. 10092L.R., dated the 14th July 1936, appointing certain persons to be Chairman and members of the Bashati Debt Settlement Board in the Sadar subdivision of the Mymensingh district, I hereby direct, under section 4 of the Bengal Agricultural Debtors Act, that the name of Maulvi Md. Abdur Rahim be removed from the list of members.

2. I hereby appoint, under section 3 (*2*) of the Act, Maulvi Jahiruddin Ahmed to be a member of the aforesaid Board in place of Maulvi Md. Abdur Rahim, deceased.

No. 993R.—22nd March 1937.—In exercise of the powers delegated to me by Government notification No. 10106L.R., dated the 14th July 1936, and with reference to notification No. 4048L.R., dated the 16th October 1936, appointing certain persons to be Chairman and members of the Kumargati Debt Settlement Board in the Sadar subdivision of the Mymensingh district, I hereby cancel the appointment of Babu Durga Prasanna Bal, member and Chairman of the said Board under section 4 of the Bengal Agricultural Debtors Act and appoint Babu Hriday Chandra Debnath to be a member in his place under section 3 (*2*) of the Act.

Maulvi Abdur Rashid, a sitting member of the Board, is appointed to be the Chairman of the Board in place of Babu Durga Prasanna Bal.

No. 1024R.—23rd March 1937.—In exercise of the powers delegated to me under Government notification No. 10106L.R., dated the 14th July 1936, and with reference to notification No. 5566L.R., dated the 9th March 1937, sanctioning the establishment of the undermentioned Debt Settlement Boards in the Tangail subdivision of the Mymensingh district, published at page 504, Part I of the *Calcutta Gazette*, dated the 11th March 1937, I hereby appoint, under section 3 (*2*) of the Bengal Agricultural Debtors Act, 1935 (Bengal Act VII of 1936), the following persons to be Chairmen and members of the said Boards, as noted above their names for a term of three years:—

Delduer Debt Settlement Board.

Maulvi Osmanuddin Sarker, Chairman.

Members.

Babu Jagabandhu Sarkar.
Babu Binode Behari Saha.
Maulvi Mir Abdul Haque.
Maulvi Wajuddin Mia.

Musuddi Debt Settlement Board.

Munshi Khondokar Daraj Ali, Chairman.

Members.

Munshi Kasimuddin Ahmed.
Babu Lakshman Chandra Pandit
Munshi Sekandar Ali Ahmed.
Munshi Emdad Hossain Talukdar.

Hadira Debt Settlement Board.

Munshi Ismail Hossain Ahmed, Chairman.

Members.

Moulana Mahtab Uddin.
Haji Gadu Muhammad Sarkar.
Babu Keshav Chandra Chanda.
Munshi Nawab Ali Sarkar.

Char-Gabsara Debt Settlement Board.

Maulvi Rustom Ali Talukdar, Chairman.

Members.

Babu Gurudas Chakraborty.
Munshi Ajhar Ali Mia.
Munshi Raj Mahmud Sarkar.
Maulvi Rahim Baksha Khondokar

Gobindasi Debt Settlement Board.

Munshi Muhammad Akbar Hossain, Chairman.

Members.

Babu Basanta Kumar Bose.
Babu Jadab Chandra Basak.
Munshi Golam Mortuza Talukdar.
Munshi Aman Ali Taratdar.

Nikrail Debt Settlement Board.

Babu Akshoy Kumar Guha, Chairman.

Members.

Babu Brajendra Kishore Basak.
Munshi Ahmad Ali Sarkar.
Munshi Kazem Uddin Sarkar.
Maulvi Montazuddin.

Birtara Debt Settlement Board.

Munshi Md. Ramjan Ali Talukdar, Chairman

Members.

Babu Madhabindu Poddar.
Maulvi Younos Ali.
Munshi Momtazuddin Sarkar.
Munshi Jahiruddin Sarkar.

Dhanbari Debt Settlement Board.

Maulvi Mir Mahtab Ali, Chairman.

Members.

Munshi Makbul Tarafdar.
Babu Mahim Chandra Dey.
Munshi Belayet Ali Sarkar.
Maulvi Mir Abdus Samad.

Gazaria Debt Settlement Board.

Maulvi Abdul Aziz Mia, Chairman.

Members.

Md. Jarip Uddin Munshi.
Maulvi Anwar Mia.
Maulvi Insabali Sikdar.
Babu Jagabandhu Mandal.

Jadabpur Debt Settlement Board.

Babu Basanta Kumar Guha, Chairman.

Members.

Babu Behari Chandra Mandal.
Maulvi Tamijuddin Khan.
Maulvi Muksed Ali Sarkar.
Maulvi Alimuddin Sarkar.

Hatibandha Debt Settlement Board.

Babu Rajendra Kumar De Sarkar, Chairman.

Members.

Maulvi Azizal Haque Sarkar.
Maulvi Abdul Rasid Khan.
Maulvi Afsar Uddin Mallik.
Babu Joy Chand Sarkar.

Kokdohora Debt Settlement Board.

Maulvi Sultan Ahmad, Chairman.

Members.

Babu Gajendra Nath Saha.
Babu Kedar Nath Bhattacharya.
Maulvi Hajibar Rahman Khan.
Maulvi Jonabali Sarker.

Chakanda Golubari Debt Settlement Board.

Dr. Jamshed Ali Talukdar, Chairman.

Members.

Babu Makhan Lal Chakraborty.
Munshi Abdul Jabbar Talukdar.
Babu Jadab Chandra Sen.
Munshi Tasar Uddin Sarkar.

No. 1026R.—23rd March 1937.—In exercise of the powers delegated to me under Government notification No. 10106L.R., dated the 14th July 1936, and with reference to notification No. 5567 L.R., dated the 9th March 1937, sanctioning the establishment of the undermentioned Debt Settlement Boards in the Netrakona subdivision of the Mymensingh district, published at page 504, Part I of the *Calcutta Gazette*, dated the 11th March 1937, I hereby appoint, under section 3 (2) of the Bengal Agricultural Debtors Act, 1935 (Bengal Act VII of 1936), the following persons to be Chairmen and members of the said Boards as noted above their names for a term of three years:—

Muzaffarpur Debt Settlement Board.

Maulvi Abal Hossain Choudhury, Chairman.

Members.

Maulvi Abdur Rahim Khan.
Maulvi Mofizuddin Bhuyan.
Babu Manindra Chandra Chakraborty.
Babu Mathura Nath Biswas.

Kendua Debt Settlement Board.

Babu Mono Mohan De, B.A., Chairman.

Members.

Babu Dinesh Chandra Bhattacharjee.
Maulvi Shah Newaj Talukdar.
Maulvi Aktar Husain.
Maulvi Mafizuddin Bhuyan.

Paikura Debt Settlement Board.

Babu Prabhat Chandra Patranavis, Chairman.

Members.

Babu Gagan Chandra Chanda.
Maulvi Harmuz Bhuyan.
Maulvi Abdul Aziz Bhuyan.
Maulvi Afsar Bhuyan.

Bagatia Debt Settlement Board.

Babu Har Kumar Choudhury, Chairman.

Members.

Maulvi Ali Akbar.
Babu Murari Mohan Sarkar.
Babu Radhananda Choudhury.
Babu Baikuntha Nath Sarkar.

Susang Durgapur Debt Settlement Board.

Maulvi Syed Momazzaduddin Ahmed, Chairman.

Members.

Babu Khagendra Prasad Saha.
Babu Kshitish Chandra Bhattacharjee.
Haji Moulvi Akbar Ali.
Babu Bidhu Bhusan De.

Kaliara-Bakaljora Debt Settlement Board.

Babu Jogesh Chandra Thakur, Chairman.

Members.

Babu Gokul Chandra Pal.
Maulvi Nawab Ali Khan.
Maulvi Husain Ali Talukdar.
Maulvi Nasaratuddin Talukdar.

Dhobaura-Porakandulia Debt Settlement Board.

Babu Lalit Mohan Sen, Chairman.

Members.

Babu Kali Das Saha Roy.
Maulvi Shamsul Huda.
Maulvi Ali Husain Khan
Maulvi Sadar Ali Master.

Padamsri Debt Settlement Board.

Maulvi Khorshed Ali Khan, B.A., Chairman.

Members.

Maulvi Jafar Mallik.
Maulvi Nur Hossain Ahmed.
Babu Harish Chandra Roy.
Babu Joy Deb Sarkar.

Hogla Debt Settlement Board.

Maulvi Abbas Mir, Chairman.

Members.

Babu Bijoy Chandra Saha.
Maulvi Md. Kadir Baksh.
Maulvi Md. Aftabuddin.
Babu Bepin Chandra Chakravorty.

Erratum.—No. 1029L.R.—23rd March 1937.—In notification No. 176R., dated the 25th January 1937, published at page 216, Part I of the *Calcutta Gazette* of 4th February 1937, appointing Chairman and members of Nailtala Debt Settlement Board of Perojpur subdivision in the district of Bakarganj, *for* "Babu Behari Sikdar", Chairman, *read* "Babu Bepin Behari Sikdar", Chairman.

Erratum.—No. 1030L.R.—23rd March 1937.—In notification No. 176R., dated the 25th January 1937, published at page 217, Part I of the *Calcutta Gazette* of 4th February 1937, appointing Chairman and members of Kathalia Debt Settlement Board of Perojpur subdivision in the district of Bakarganj, *for* "Kathali Debt Settlement Board" *read* "Kathalia Debt Settlement Board."

No. 1061R.—23rd March 1937.—In exercise of the powers delegated to me under Government notification No. 10106L.R., dated the 14th July 1936, and with reference to notification No. 6413L.R., dated the 16th March 1937, sanctioning the establishment of the undermentioned Debt Settlement Boards in the Goalundo subdivision of the Faridpur district, published at page 596, Part I of the *Calcutta Gazette*, I hereby appoint, under section 3 (2) of the Bengal Agricultural Debtors Act, 1935 (Bengal Act VII of 1936), the following persons to be Chairmen and members of the said Boards as noted above their names for a term of three years:—

Sengram Debt Settlement Board.

Munshi Muhammadali Mallik, Chairman.

Members.

Babu Jyotish Chandra Ghosh.
Babu Kashishwar Das.
Munshi Sefatulla Biswas.
Munshi Kazi Abdul Hossain.

Narua Debt Settlement Board.

Maulvi Mahammad Ismail Hossain, Chairman.

Members.

Babu Kalia Daman Shaha.
Munshi Amirali Mandal.
Munshi Ashanuddin Biswas.
Munshi Tasiruddin Biswas.

Ujanchar Debt Settlement Board.

Munshi Md. Shamsher Ali, Chairman.

Members.

Babu Ananta Mohan Sil.
Babu Beni Madhab Biswas.
Hazi Md. Dudu Khan.
Munshi Dirajatulla Mridha.

No. 1547J.—23rd March 1937.—Maulvi A. F. Muhammad Izharul Faiz, Sub-Deputy Collector, on probation, Dacca, was allowed earned leave for fifteen days, under rule 10 of the Bengal Services (Revision of Leave) Rules, 1934, in extension of the leave already granted to him in this office notification No. 6062J., dated the 25th November 1936.

No. 1554J.—23rd March 1937.—It is hereby notified for general information that, under rule 20 (*b*) of the manual of rules for the management of charitable hospitals and dispensaries in Bengal, published with Government notification No. 138T.Medl., dated the 7th June 1915, Babu Ganesh Chandra Paul is appointed to be a member of the Committee for the management of the R. C. Charitable Dispensary at Islampur in the district of Mymensingh, *vice* Babu Ramdayal Paul, deceased.

No. 1569J.—23rd March 1937. It is hereby notified for general information that, under rule 63 (2) of the Bengal Jail Code, 1919, Miss Mair Davies, Baptist Mission, Dacca, and Mrs. P. K. Bose are re-appointed non-official visitors of the Dacca Central Jail for a further period of two years with effect from the 14th March 1937.

No. 1570J.—23rd March 1937.—It is hereby notified for general information that, under rule 63 (2) of the Bengal Jail Code, 1919, Babu Debendra Nath De and Maulvi Nazimuddin Chaudhury are re-appointed non-official visitors of the Sub-Jail at Munshiganj in the district of Dacca for a further period of two years with effect from the 26th March 1937.

No. 1617J. 23rd March 1937.—Babu Benoy Bhusan Chaudhury, Sub-Deputy Collector, Netrakona, in the district of Mymensingh, is appointed to be Circle Officer of Manikganj West Circle in the district of Dacca.

This cancels notification No. 1196J., dated the 2nd March 1937, transferring Babu Bijoy Govinda Ghosal, Sub-Deputy Collector, Bakarganj, to Manikganj as Circle Officer, West Circle.

No. 1624J.—23rd March 1937.—Maulvi Muhammad Abul Bashar, Sub-Deputy Collector and Circle Officer, Sadar South Circle, in the district of Dacca, is transferred to Jamalpur subdivision in the district of Mymensingh on general duty.

No. 1630J.—23rd March 1937.—Babu Bisweswar Sen Gupta, Sub-Deputy Collector, Jamalpur, in the district of Mymensingh, is transferred to Netrakona subdivision in that district on general duty.

No. 1635J.—23rd March 1937.—Maulvi Nuruddin Ahmad, No. II, Sub-Deputy Collector, Dacca, is appointed to be Circle Officer, Sadar South Circle, in that district.

H. R. WILKINSON, *Commissioner (offg.)*.

Faridpur, the 31st March 1937.

No. 2060J.—It is hereby notified for general information that, under section 13 of the Bengal Village Self-Government Act (Act V of 1919), Babu Digendra Mohan Ghose has been appointed to be a member of the Gatti union board in police-station Nagarkanda in the Sadar subdivision of the Faridpur district, *vice* Babu Ramani Mohan Ghose, deceased.

K. A. L. HILL, *District Magistrate*.

Madaripur, the 31st March 1937.

Notice is hereby given under rule 9 of the Bengal Legislative Assembly and the Bengal Legislative Council Electoral (Election Expenses and Election Petitions) Rules, 1936, that the returns of election expenses and declarations of the following candidates for the Madaripur West (Rural) Muhammadan Constituency have been lodged before me on the dates noted against their names:—

Name of candidate.	Date of lodging return.
1. G. Kibria ..	3rd March 1937.
2. Daliluddi Ahmed ..	6th March 1937.
3. Mohammad Abul Fazal ..	6th March 1937.

The returns and the declarations can be inspected in my office on any working day between 11 a.m. and 5 p.m. Any person shall, on payment of a fee of one rupee, be entitled to inspect any such return or declaration and, on payment of a fee of Rs. 2 for each copy, to obtain attested copies thereof or any part thereof.

W. H. S. SMITH, *Subdivisional Officer*.

Orders by the Deputy Inspector-General of Police, Dacca Range.

Dacca.—No. 1268. — 25th March 1937. — Babu Satish Chandra Neogi, Inspector, Faridpur, is gratned 2 months' leave on half average pay, on medical certificate, in extension of the leave already granted to him.

Sergeant W. S. Hargreaves of the Dacca district acted as an Inspector for 24 days with effect from the 10th December 1936, *vice* Mr. P. R. McDonald, Inspector, Dacca, who was on leave on average pay during the above period.

F. W. KIDD,

Deputy Inspector-General of Police (offg.).

Presidency Division—Calcutta.

No. 602R.G.—30th March 1937.—Maulvi Abu Ahmed Faizul Mahee, Sub-Deputy Collector (and Circle Officer), Barrackpore, 24-Parganas, is granted leave on average pay from the 4th March 1937 or any subsequent date up to the 25th March 1937, under rule 81(*b*) (*ii*) of the Fundamental Rules.

A. J. DASH, *Commissioner*.

Berhampore, the 18th March 1937.

It is hereby notified for general information that, under section 13 of the Bengal Village Self-Government Act, 1919 (Act V of 1919), read with rule 36 of the rules for election and appointment of members of union boards, Babu Jyotish Chandra Bardhan of Mamujarganj, post office Dahapara, police-station Murshidabad, has been appointed to be a member of the Dahapara union board No. I, police-station Murshidabad, subdivision Lalbagh, in the district of Murshidabad, *vice* Babu Batakrishna Ghosh, deceased.

S. P. H. CADMAN, *District Magistrate*.

Alipore, the 30th March 1937.

It is hereby notified for general information that, under section 13 of the Bengal Village Self-Government Act, 1919 (Bengal Act V of 1919), Babu Pramatha Nath Chakrabarty has been duly elected to be a member of Jetia-Majhipara union board under the Bijpore police-station in the Barrackpore subdivision of the district of 24-Parganas, *vice* Babu Kali Das Mukherji, deceased.

S. C. SINHA, *Addl. District Magistrate*.

Alipore, the 30th March 1937.

It is hereby notified for general information under rule 9 of the Bengal Legislative Assembly Electoral (Election Expenses and Election Petitions) Rules, 1936, that the candidates named below have filed their return of election expenses and declarations on the date and in respect of the constituencies noted against their names :—

Names of candidates.	Name of constituency of the Bengal Legislative Assembly.	Date on which the return of election expenses and declarations have been lodged.
1. Fazlur Rahaman ..	Barrackpore (Registered Factories) Labour Constituency.	22nd March 1937.
2. Rai Sahib Haralal Halder ..	24-Parganas South-East Rural (General) Constituency.	25th March 1937.

The returns can be inspected on any working day between the hours of 11 a.m. and 5 p.m. at the District Magistrate's office, Alipore, by any person on payment of a fee of Re. 1 only.

H. GRAHAM, *District Magistrate and Returning Officer.*

Meherpur, the 24th March 1937.

Under rule 9 of the Bengal Legislative Assembly and the Bengal Legislative Council Electoral (Election Expenses and Election Petitions) Rules, 1936, it is hereby notified for general information that Muhammad Mohsinali and Muhammad Abdul Hannan from the Meherpur (Rural) Muhammadan Constituency have lodged with me on the 4th March 1937 and on the 19th February 1937, respectively, their returns of election expenses together with necessary declarations which can be inspected in my office between the hours of 12 a.m. and 3 p.m. on any working day, and any person shall, on payment of a fee of one rupee, be entitled to inspect the same, and on payment of a fee of rupees two for each copy, to obtain attested copies thereof or of any part thereof.

S. P. SARKAR, *Returning Officer.*

Bongaon, the 28th March 1937.

It is hereby notified for general information that Maulvi Fazlul Karim Khan Bahadur, a candidate from Bongaon Muhammadan (Rural) Constituency of the Bengal Legislative Assembly, has lodged his return of election expenses and declaration on the 10th March 1937. Any person is entitled to inspect the return on any working day between the hours of 11 a.m. and 5 p.m. on payment of a fee of Re. 1 and attested copy thereof or any part of it may be obtained on payment of a fee of Rs. 2.

N. G. ROY, *Returning Officer (Subdivisional Officer).*

Calcutta, the 30th March 1937.

It is notified under rule 9 of the Bengal Legislative Assembly Electoral (Election Expenses and Election Petitions) Rules, 1936, that Mr. Md. Rafique, a candidate to the by-election of the Bengal Legislative Assembly from the Calcutta North Muhammadan (Urban) Constituency, has lodged his return of election expenses and declaration on the 25th March 1937.

It may be inspected in the election office at No. 2, Bankshall Street, on payment of proper fees between the hours of 1 p.m. and 4 p.m.

S. K. SINHA,
Chief Presidency Magistrate and Returning Officer.

Calcutta, the 30th March 1937.

It is notified under rule 9 of the Bengal Legislative Council Electoral (Election Expenses and Election Petitions) Rules, 1936, that Rai Promotho Nath Mullick Bahadur, a candidate to the Bengal Legislative Council from the Calcutta General (Urban) Constituency, has lodged his return of election expenses and declaration on the 25th March 1937.

It may be inspected in the election department at No. 2, Bankshall Street, on payment of proper fees between the hours of 1 p.m. and 4 p.m.

S. K. SINHA,
Chief Presidency Magistrate and Returning Officer.

Calcutta, the 2nd April 1937.

It is notified under rule 9 of the Bengal Legislative Assembly Electoral (Election Expenses and Election Petitions) Rules, 1936, that the Hon'ble Sir Khwaja Nazimuddin, Kt., K.C.I.E., a duly elected member to the by-election of the Bengal Legislative Assembly from the Calcutta North Muhammadan (Urban) Constituency, has lodged his return of election expenses and declaration on the 1st April 1937.

It may be inspected in the election department at No. 2, Bankshall Street, on payment of proper fees between the hours 1 p.m. and 4 p.m.

R. GUPTA, *Chief Presidency Magistrate and Returning Officer.*

Orders by the Deputy Inspector-General of Police, Intelligence Branch, C. I. D.

Calcutta.—No. 510R.O.—2nd April 1937.—Babu Haridas Mukharji, Inspector, is granted 27 days' leave on average pay, on medical certificate, in extension of the leave already granted to him.

C. E. S. FAIRWEATHER,
Deputy Inspector-General of Police.

Rajshahi Division—Jalpaiguri.

No. 1277M.—25th March 1937.—In exercise of the power conferred on me by section 25 of the Local Self-Government Act, III of 1885, as amended by Act V (B.C.) of 1908, I approve of the election by the members of the Sadar local board in the district of Jalpaiguri of Babu Nityananda Roy to be their Chairman.

No. 934J.—26th March 1937.—Under the provisions of rule 63 (2) of Chapter IV of the Bengal Jail Code, I hereby re-appoint Mrs. Zakir Husain to be a non-official lady visitor of the Pabna District Jail for a period of two years.

No. 938J.—26th March 1937.—Under the provisions of rule 691A, Chapter XVIIA of the Bengal Jail Code, I re-appoint Maulvi Md. Abdul Hamid to be an Honorary Teacher of the Pabna Jail for a period of two years.

No. 942J.—26th March 1937.—Under the provisions of rule 691A, Chapter XVIIA of the Bengal Jail Code, I re-appoint Brahmachari Paresh Chaitanya to be an Honorary Teacher of the Pabna Jail for a period of two years.

No. 1298M.—29th March 1937. — In exercise of the powers delegated to me by Government notification No. 10108L.R., dated the 14th July 1936, I hereby appoint, under section 3(2) of the Bengal Agricultural Debtors Act, 1935 (Bengal Act VII of 1936), for a term of three years from 15th April 1937, the following persons as Chairmen and members of the undermentioned Debt Settlement Boards established in the Sadar subdivision of the Pabna district under Government notification No. 4574L.R., dated the 1st March 1937, at page 429 of the *Calcutta Gazette*, dated the 4th March 1937:—

Goyespur Debt Settlement Board.

Babu Monomohan Sarkar, Chairman.

Members.

Maulvi Afajuddin Molla.
Maulvi Jasiruddin Sheikh.
Maulvi Rasidal Nabi.
Babu Kshitish Chandra Kar.

Ataikula Debt Settlement Board.

Babu Srigobinda Saha Chowdhury, Chairman.

Members.

Babu Kishori Lal Pal.
Maulvi Haji Kajemuddin Ahmed.
Maulvi Sefatulla Pramanik.
Maulvi Md. Rostamali Pramanik.

Chartarapur Debt Settlement Board.

Muhammad Mohiuddin Biswas, Chairman.

Members.

Muhammad Chanduddin.
Muhammad Ayejuddin.
Muhammad Daliluddin.
Babu Kokan Chandra Saha.

Dogachi Debt Settlement Board.

Babu Panchanan Saha, Chairman.

Members.

Maulvi Osman Gani Sheikh.
Babu Girija Sankar Joaddar.
Maulvi Kabiruddin Khan.
Maulvi Abdul Karim Sheikh.

Ekdanta Debt Settlement Board.

Maulvi Dr. Rahimuddin Ahmad, Chairman.

Members.

Maulvi Md. Moyezuddin Sarkar.
Maulvi Md. Foizuddin Sarkar.
Babu Sasadhar Das.
Babu Binode Behari Ghosh.

Tantibandha Debt Settlement Board.

Babu Guru Govinda Maitra, Chairman.

Members.

Babu Purna Chandra Sarkar.
Maulvi Khorsedali Mridha.
Maulvi Tamijuddin Khan.
Md. Kafiluddin Mridha.

Sujanagar Debt Settlement Board.

Babu Kalipada Bhadury, Chairman.

Members.

Maulvi Jahiruddin Biswas.
Babu Purna Chandra Dutta.
Maulvi Monseruddin Sheikh.
Babu Mahendra Nath Kundu.

Manikhat Debt Settlement Board.

Maulvi Naoajes Ali Mia, Chairman.

Members.

Maulvi Mahiuddin Mia.
Haji Muhammadali Mia.
Babu Suresh Chandra Sikdar.
Babu Nalini Kanta Chowdhury.

Hatkhali Debt Settlement Board.

Babu Akhoy Kumar Hore, Chairman.

Members.

Munshi Entajuddin Sheikh.
Babu Nalini Kanta Bose.
Maulvi Mahatabuddin Ahmad.
Babu Monmohan Mazumdar.

Nazirganj Debt Settlement Board.

Babu Aswini Kumar Poddar, Chairman.

Members.

Munshi Afazuddin Biswas.
Munshi Jafarali Molla.
Munshi Badiajamman Mandal.
Babu Amiya Kumar Bose.

Satbaria Debt Settlement Board.

Babu Amarendra Nath Poddar, Chairman.

Members.

Maulvi Muhammad Delbar Hussain Khan.
Maulvi Muhammad Haidar Ali Pramanik.
Maulvi Muhammad Molamuddin Pramanik.
Babu Aswini Kumar Adhikari.

Dasuria Debt Settlement Board.

Babu Amrita Lal Chakrabarty, Chairman.

Members.

Babu Satya Charan Sanyal.
Babu Kalipada Saha.
Maulvi Mafizuddin Malitha.
Maulvi Rahmat Ali Khondkar.

Prannathpur Debt Settlement Board.

Maulvi Sayed Uddin Ahmad, Chairman.

Members.

Babu Jadu Nath Saha.
Babu Gour Gopal Biswas.
Maulvi Jasimuddin Biswas.
Md. Abdul Jabbar Mian.

Sahapur Debt Settlement Board.

Md. Safiuddin, Chairman.

Members.

Babu Suresh Chandra Kundu.
Md. Wasimuddin.
Babu Bijoy Lal Kundu.
Md. Tafazzal Hossain.

Nimaichara Debt Settlement Board.

Babu Srish Chandra Roy, Chairman.

Members.

Maulvi Elahi Bax Pramanik.
Md. Mominuddin Mian.
Babu Jagabandhu Saha.
Maulvi Kasimuddin Molla.

Gunaigacha Debt Settlement Board.

Babu Sridhar Mazumdar, Chairman.

Members.

Babu Jitendra Nath Bhattacharyya.
Md. Khorsed Alom.
Md. Faizuddin Molla.
Babu Kishori Lal Sarkar.

Handial Debt Settlement Board.

Maulvi Abbas Ali Khondkar, Chairman

Members.

Babu Tarak Nath Dutta.
Babu Harendra Nath Saha.
Md. Ketabali Sardar.
Md. Jafar Molla.

Parswadanga Debt Settlement Board.

Babu Surendra Nath Bagchi, Chairman.

Members.

Md. Jahiruddin Sarkar.
Babu Jogesh Chandra Sanyal
Babu Satish Chandra Sarkar.
Md. Aminuddin Molla.

Bhangura Debt Settlement Board

Maulvi Abdur Rahman, Chairman

Members.

Babu Sristidhar Kundu.
Babu Ashutosh Chakraborty.
Hazi Naziruddin Molla.
Babu Nagendra Nath Mazumdar.

Pungli Debt Settlement Board

Md. Ainul Huq, Chairman.

Members.

Babu Haripada Kundu.
Md. Jalaluddin Khan.
Md. Emdad Hossain.
Babu Sarat Chandra Seel.

Banwarinagar Debt Settlement Board.

Babu Anukul Chandra Bhattacharjya, Chairman.

Members.

Babu Gopal Chandra Kundu.
Md. Khorsedali Khondkar.
Maulvi Mataharuddin Ahmed.
Babu Pranada Govinda Chakravarty.

Faridpur Debt Settlement Board.

Maulvi Jilimuddin Khan, Chairman.

Members.

Maulvi Moyanuddin Sarkar.
Maulvi Yunusuddin Miah.
Babu Kanailal Sarkar.
Babu Bishnupada Seal.

Demra Debt Settlement Board.

Babu Saileswar Roy, Chairman.

Members.

Babu Suresh Chandra Roy.
Babu Jnanendra Nath Kundu.
Munshi Md. Ebadali Pramanik.
Munshi Md. Tajumuddin Molla.

Dhulauri Debt Settlement Board.

Muhammad Kasimuddin Fakir, Chairman.

Members.

Muhammad Khorjanuddin Sarkar.
Babu Lakshmi Kanta Sarkar.
Babu Biswanath Saha.
Md. Rohimuddin Sarkar.

Dhopadaha Debt Settlement Board.

Babu Hrishikesh Talukdar, Chairman.

Members.

Babu Makhan Lal Saha.
Munshi Hajari Fakir.
Akbar Khair.
Sekandar Ali Munshi.

Santhia Debt Settlement Board.

Maulvi Hashan Ali, Chairman.

Members.

Basiruddin Sheikh.
Babu Surendra Nath Sarkar.
Babu Atul Chandra Bhowmik.
Babu Mahendra Nath Chakraborty.

Khetupara Debt Settlement Board.

Babu Jatindra Nath Saha, Chairman.

Members.

Babu Joshesh Chandra Maitra.
Haji Moyejuddin.
Haji Gedu Mal.
Sherali Khan.

No. 1304M.—29th March 1937.—In exercise of the powers delegated to me by Government notification No. 10108L.R., dated the 14th July 1936, I hereby appoint, under section 3 (2) of the Bengal Agricultural Debtors Act, 1935 (Bengal Act VII of 1936), for a term of three years from 15th April 1937, the following persons to be Chairmen and members respectively of the undermentioned Debt Settlement Boards established in the Nilphamari subdivision of the Rangpur district under Government notification No. 4575L.R., dated the 1st March 1937, at page 429 of the *Calcutta Gazette*, dated the 4th March 1937:—

Bangalipur Debt Settlement Board.

Babu Kalipada Banerjee, Chairman.

Members.

Munshi Jayenullah Pramanik.
Munshi Afan Mondal.
Munshi Khujia Pramanik.
Munshi Barkatullah Pramanik.

Khagakharibari Debt Settlement Board.

Maulvi Wasimuddin Ahamed, Chairman.

Members.

Munshi Mahabubar Rahaman.
Babu Jadav Chandra Roy.
Munshi Majibuddin Pandit.
Babu Gournath Roy.

Balapara Debt Settlement Board.

Maulvi Azizar Rahaman Chaudhuri, Chairman.

Members.

Munshi Amiruddin Sarkar.
Babu Gopi Nath Sinha.
Babu Seturam Singha.
Munshi Alimuddin Patowari.

Chandkhana Debt Settlement Board.

Babu Guru Charan Das, Chairman.

Members.

Munshi Aser Md. Sarkar.
Babu Jyotish Chandra Roy.
Munshi Tafiluddin Miah.
Munshi Md. Ismail Sarkar.

Sonarai Debt Settlement Board.

Maulvi Md. Eunus, Chairman.

Members.

Maulvi Azizar Rahaman, B.A.
Maulvi Md. Osmanali.
Babu Mahesh Chandra Adhikari.
Babu Narendra Nath Sarkar.

Kachukata Debt Settlement Board.

Munshi Saharullah Sarkar, Chairman.

Members.

Safiuddin Sarkar.
Babu Barada Prasad Roy.
Babu Pranbandhu Mohanta.
Munshi Nasimuddin Patowari.

No. 1307M.—29th March 1937.—In exercise of the powers delegated to me by Government notification No. 10108L.R., dated the 14th July 1936, I hereby appoint, under section 3 (2) of the Bengal Agricultural Debtors Act, 1935 (Bengal Act VII of 1936), for a term of three years from 15th April 1937, the following persons to be Chairman and members respectively of the undermentioned Debt Settlement Board established in the Sadar subdivision of the Pabna district under Government notification No. 4885L.R., dated the 3rd March 1937, at page 502 of the *Calcutta Gazette*, dated the 11th March 1937:—

Sadullapur Debt Settlement Board.

Maulvi Serajuddin Ahmed, Chairman.

Members.

Babu Sarat Chandra Biswas.
Maulvi Muhammad Haranuddin Khan.
Maulvi Abdul Latif Chowdhury.
Maulvi Muhammad Khodabux Pramanik.

No. 1310M.—29th March 1937.—In exercise of the powers delegated to me by Government notification No. 10108L.R., dated the 14th July 1936, I hereby appoint, under section 3 (2) of the Bengal Agricultural Debtors Act, 1935 (Bengal Act VII of 1936), for a term of three years from 15th April 1937, the following persons to be Chairmen and members respectively of the undermentioned Debt Settlement Boards established in the Nator subdivision of the Rajshahi district under Government notification No. 4577L.R., dated 1st March 1937, at page 430 of the *Calcutta Gazette*, dated 4th March 1937:—

Chandipur Debt Settlement Board.

Babu Suresh Chandra Chakraborty, Chairman.

Members.

Babu Srish Chandra Sarkar.
Maulvi Basiruddin Sarkar.
Maulvi Moyejuddin Sarkar.
Maulvi Kudratulla Pramanik.

Chaumohon Debt Settlement Board.

Maulvi Md. Derasatulla, Chairman.

Members.

Babu Nagendra Nath Sanyal.
Babu Hem Chandra Sarkar.
Maulvi Usman Ali Sarkar.
Maulvi Kasiruddin Sarkar.

No. 1313M.—29th March 1937.—In exercise of the powers delegated to me by Government notification No. 10108L.R., dated the 14th July 1936, I hereby appoint, under section 3 (2) of the Bengal Agricultural Debtors Act, 1935 (Bengal Act VII of 1936), for a term of three years from 15th April 1937, the following persons to be Chairman and members respectively of the undermentioned Special Debt Settlement Board established in the Nator subdivision of the Rajshahi district under Government notification No 4576L.R., dated the 1st March 1937, at page 430 of the *Calcutta Gazette*, dated the 4th March 1937:—

Nator Special Debt Settlement Board.

Subdivisional Officer, Nator, Chairman (*ex-officio*).

Members.

Babu Sachindra Nath Acharjee.
Babu Kishori Mohon Basak.
Mr. Ashrafali Khan Chaudhuri, Bar-at-law.
Maulvi Md. Ismail Hossain.

No. 1316M.—29th March 1937.—In exercise of the powers delegated to me by Government notification No. 10108L.R., dated the 14th July 1936, I hereby appoint, under section 3 (2) of the Bengal Agricultural Debtors Act, 1935 (Bengal Act VII of 1936), for a term of three years from 15th April 1937, the following persons to be Chairmen and members respectively of the undermentioned Debt Settlement Boards established in the Sadar subdivision of the Rangpur district under Government notification No. 5565L.R., dated 9th March 1937, at page 503 of the *Calcutta Gazette*, dated 11th March 1937:—

Pirganj Debt Settlement Board.

Maulvi Shah Abdul Latif, Chairman.

Members.

Maulvi Afzal Hossain Khan.
Munshi Md. Abdul Hoque.
Munshi Tasaruddin Sarkar.
Babu Bhairab Chandra Sarkar.

Tukria Debt Settlement Board.

Maulvi Mahammad Ismail, Chairman

Members.

Maulvi Abdul Aziz Talukdar.
Munshi Khetabuddin Mondal.
Munshi Ahmed Gachua.
Munshi Khetabuddin Sarkar.

Milanpur Debt Settlement Board.

Babu Kulada Prasad Roy, Chairman.

Members.

Babu Barada Kanta Sarkar.
Munshi Naya Mia Mandal.
Munshi Alepuddin Sarkar.
Munshi Jafuruddin Sarkar.

Gopalpur Debt Settlement Board.

Maulvi Hefazuddin Talukdar, Chairman.

Members.

Hazi Md. Khabiruddin Talukdar.
Munshi Md. Darajuddin Paikar.
Munshi Shah Md. Mofazzal Hossain.
Munshi Mahammad Gayeshuddin Sarnakar.

Durgapur Debt Settlement Board.

Babu Hem Chandra Kanjilal, Chairman.

Members.

Ismail Sarkar.
Khajeruddin Mia.
Haji Jonabuddin Mia.
Babu Basanta Kumar Sarkar.

Barahazratpur Debt Settlement Board.

Babu Monmatha Nath Bhattacharjee, Chairman.

Members.

Maulvi Abdul Hamid Mia.
Haji Ali Mahamud Talukdar.
Maulvi Nasiruddin Mandal.
Babu Devendra Nath Rai.

Kafrikhal Debt Settlement Board.

Mahammad Najamuddin Mia, Chairman.

Members.

Haji Mohasenuddin Sarkar.
Kafiluddin Sarkar.
Fajaluddin Ahmed.
Khabiruddin Sarkar

Balarhat Debt Settlement Board.

Kazi Abdul Jalil Khondakar, Chairman.

Members.

Munshi Mahamed Shah Jamanali.
Munshi Khatir Mamud Sarkar.
Munshi Darasuddin Ahmed.
Maulvi Abdur Rahman Sarkar.

Bara Darga Debt Settlement Board.

Khaliluddin Mondal, Chairman.

Members.

Afanulla Sarkar.
Khatabuddin Mia.
Jahiruddin Kabiraj.
Abdul Ajiz Mia.

Mithipur Debt Settlement Board.

Maulvi Sha Gaburali Mia, Chairman.

Members.

Babu Basanta Kumar Sarkar.
Munshi Mahammad Jenatulla.
Maulvi Mahatafuddin Mohammad.
Maulvi Maharulla.

Panchgachi Debt Settlement Board.

Munshi Mahammad Ejaharali Mandal, Chairman.

Members.

Sha Anserali Mia.
Maulvi Tamiruddin Sarkar.
Munshi Omaruddin Pramanik.
Babu Dwaraka Nath Biswas.

Natibpur Debt Settlement Board.

Maulvi Mahammad Sharafuddin Sha Choudhuri, Chairman.

Members.

Babu Haribola Majumdar.
Munshi Raisuddin Mondal.
Munshi Maniruddin Ahmed.
Basiruddin Sarkar.

Bara Alampur Debt Settlement Board.

Munshi Tamijuddin Ahmed, Chairman.

Members.

Babu Ram Kumar Sil.
Munshi Abul Hossen
Munshi Shahebuddin Mondal.
Munshi Kafiluddin Kazi.

Bhangni Debt Settlement Board.

Babu Promoda Ranjan Banerjee, Chairman

Members.

Babu Jadu Nath Sinha.
Maulvi Mahammad Ismail Mia.
Maulvi Abdur Rejjak Mia.
Maulvi Meherali Mia.

Pyrabund Debt Settlement Board.

Munshi Khabaruddin Ahmed, Chairman.

Members.

Munshi Alepuddin Mia.
Munshi Khelaruddin Mondal.
Babu Kunja Behari Kabiraj.
Maulvi Tofazzal Hossain.

No. 1319M.—30th March 1937.—Whereas by Government notification No. 6760G., dated the 7th December 1935, the Hindu community in the area under the authority of the district board of Pabna has been declared a minority community for the purposes of section 10A of Act III of 1885, I, therefore, determine, in exercise of the authority vested in me by rule 53A of election rules under the Local Self-Government Act that 4 seats out of 16 elected seats in the district board shall be reserved for the minority community.

I direct that the Sadar and Sirajganj local boards shall elect 2 members each to the 4 reserved seats.

No. 1347M.—31st March 1937.—In modification of this office notification No. 5788M., dated the 21st December 1936, I appoint under section 3 (2) of the Agricultural Debtors Act, 1935, Maulvi Ebadali Sarkar as member of the Ramkrishnapur Debt Settlement Board in the district of Pabna, *vice* Maulvi Niamat Sarkar, deceased.

No. 1350M.—31st March 1937.—In modification of this office notification No. 319M., dated the 26th January 1937, I appoint under section 3 (2) of the Agricultural Debtors Act, 1935, Babu Pran Gopal Banerjee as Chairman of the Kamarjani Debt Settlement Board in the Gaibandha subdivision of the Rangpur district, *vice* Babu Bijoy Gobinda Nag, resigned.

No. 1353M.—31st March 1937.—In exercise of the powers conferred by section 4 of the Bengal Agricultural Debtors Act, 1935 (Bengal Act VII of 1936), as delegated to me by Government notification No. 10105-8L.R. dated the 14th July 1936, I cancel the appointments notified in Government notification No. 10099L.R., dated the 14th July 1936, of Babus Bimalananda Sen and Sidheswar Chatterji as Chairman and member respectively of the Chandanbaisa-Kamalpur Debt Settlement Board in the district of Bogra.

No. 1356M.—31st March 1937.—In exercise of the powers conferred by sub-section (2) of section 3 of the Bengal Agricultural Debtors Act, 1935 (Bengal Act VII of 1936), as delegated to me by Government notification No. 10105-8L.R., dated the 14th July 1936, I appoint Babu Manindra Chandra Ghosh, B.A., and Maulvi Ismailuddin Fakir as Chairman and member respectively of the Chandanbaisa-Kamalpur Debt Settlement Board in the district of Bogra.

No. 1007J.—2nd April 1937. — Under the provisions of rule 63(2) of Chapter IV of the Bengal Jail Code, I appoint Babu Sashi Lal Roy, B.L., to be a non-official visitor of the Serajganj Sub-Jail in the district of Pabna for a period of two years.

No. 1376M.—3rd April 1937.—In exercise of the powers conferred by section 4 of the Bengal Agricultural Debtors Act, 1935 (Bengal Act VII of 1936), as delegated to me by Government notification No. 10105-8L.R., dated the 14th July 1936, I cancel the appointment notified in Government notification No. 10098L.R., dated the 14th July 1936, of Maulvi Mokhleswar Rahman, Sub-Registrar, as Chairman of the Palashbari Debt Settlement Board in the Gaibandha subdivision of the Rangpur district.

No. 1379M.—3rd April 1937.—In exercise of the powers conferred by sub-section (2) of section 3 of the Bengal Agricultural Debtors Act, 1935 (Bengal Act VII of 1936), as delegated to me by Government notification No. 10105-8L.R., dated the 14th July 1936, I appoint Babu Nirmal Kumar Mukharji, Sub-Registrar, as Chairman of the Palashbari Debt Settlement Board in the Gaibandha subdivision of the Rangpur district.

No. 1383M.—3rd April 1937.—It is hereby notified for general information under section 50 of the Bengal Municipal Act, 1932, that at the general election held on the 8th March 1937, the following gentlemen were duly elected to be Commissioners of the Nator Municipality in the district of Rajshahi:—

Ward No. I.

Babu Jogendra Mohan Pramanik.

Ward No. II.

Babu Krishna Gopal Bysak.

Ward No. III.

Babu Phani Bhushan Choudhury.

Ward No. IV.

Babu Kuloda Prasanna Choudhury.
Babu Jogendra Nath Roy.

Ward No. V.

Babu Surendra Nath Moitra.

Ward No. VI.

Babu Jagadish Chandra Talapatra.

Ward No. VII.

Babu Phanindra Mohan Moitra.
Maulvi Kazi Md. Abdul Mojid.

Ward No. VIII.

Babu Sachindra Nath Moitra.

Ward No. IX.

Maulvi Amin Uddin Ahmmed.

Ward No. X.

Maulvi Md. Abdur Rezzak Khan.

Ward No. XI.

Babu Anath Bandhu Sarkar.

Ward No. XII.

Maulvi Md. Ismail Hossain

No. 1387M.—3rd April 1937.—It is hereby notified for general information under section 50 of the Bengal Municipal Act, 1932, that at the general election held on the 8th March 1937, the following gentlemen have been duly elected to be Commissioners of the Nawabganj Municipality in the district of Malda:—

Ward No. I.

Babu Ganga Charan Datta.
Babu Bipad Bhanjan Sinha.
Babu Kalikananda Mukherjee.

Ward No. II.

Babu Lakshman Chandra Mandal.

Ward No. III.

Maulvi Pear Baks Mia.
Haji Emajuddin Mia.

Ward No. IV.

Maulvi Taheruddin.
Maulvi Najmul Haque.
Maulvi Emajuddin.

No. 1393M.—3rd April 1937.—It is hereby notified for general information under section 50 of the Bengal Municipal Act, 1932, that at the general election held on the 6th March 1937, the following gentlemen were duly elected to be Commissioners of the English Bazar Municipality in the district of Malda:—

Ward No. I.

Babu Nandadulal Dutta.
Babu Bipra Charan Das.
Babu Raghunandan Poddar.
Babu Kaliranjan Lahiri.

Ward No. II.

Rai Sahib Jadunandan Choudhury.
Babu Mon Mohan Saha.
Maulvi Zeauddin Ahmed.
Maulvi Abul Hasnat.
Maulvi Hamiduddin Ahmed.

Ward No. III.

Babu Upendra Nath Maitra.
Babu Charu Chandra Sarkar.
Babu Brojesh Chandra Banerji.

Ward No. IV.

Babu Rohininandan Das.
Gossain Subha Narain Gir.

L. R. FAWCUS, *Commissioner (offg.)*

No. 3045J.R. — 2nd April 1937. — It is hereby notified under rule 9 of the Bengal Legislative Assembly Electoral (Election Expenses and Election Petitions) Rules, 1936, that Babu Raj Chandra Barman Roy Choudhuri, a candidate duly nominated for election to the Bengal Legislative Assembly from the North Bengal Municipal General Constituency, has lodged with the Returning Officer on the 1st April 1937 a return of his expenses supported by necessary declarations. The return may be inspected in the office of the Commissioner, Rajshahi Division, Jalpaiguri, during office hours on payment of a fee of Re. 1 only and attested copies or copies of any part thereof may be obtained from that office on payment of a fee of Rs. 2 only for each copy.

S. K. GHOSH, for *Commissioner and Returning Officer.*

Malda, the 17th February 1937.

Under rule 32A of the Election Rules under the Local Self-Government Act, it is notified for general information that the 17th May 1937 has been fixed for the by-election of a member for the Malda local board from thana Kharba to fill up the vacancy caused by the removal of Rai Sahib Kamala Kanta Bagchi under section 18(*1*)(*c*) of the Local Self-Government Act.

B. R. SEN, *District Magistrate.*

Rangpur, the 30th March 1937.

No. 2037J.—It is hereby notified for general information that, under section 13 of the Bengal Village Self-Government Act, 1919 (Bengal Act V of 1919), read with rule 35 of the rules for the appointment and election of members of union boards, Munshi Saleh Mahmud Dalal of village Kashiram, post office Tushbhandar, police-station Kaliganj, district Rangpur, has been duly elected to be a member of the Tushbhandar union board, police-station Kaliganj, in the Sadar subdivision of the Rangpur district, *vice* Munshi Kasimuddin Dalal, removed.

S. K. GHOSH, *District Magistrate.*

Rajshahi, the 30th March 1937.

Under rule 9 of the Bengal Legislative Assembly and the Bengal Legislative Council Electoral (Election Expenses and Election Petitions) Rules, 1936, it is hereby notified for the information of all concerned that the return of election expenses under rule 7 (*2*) of the aforesaid rules was filed before me on the 8th March 1937 by Maulvi Maniruddin Akanda, a candidate duly returned from Rajshahi North Rural Muhammadan Constituency of the Bengal Legislative Assembly. The return was received on 8th March 1937 at 5 p.m. The return can be inspected on any working day between the hours of 11 a.m. and 5 p.m. at my office by any person on payment of a fee of Re. 1 only and attested copy of the return or any part thereof can be obtained on payment of a fee of Rs. 2 only.

R. S. KRISHNASWAMY,
Subdivisional Officer and Returning Officer.

Registered No. C207

The Calcutta Gazette

THURSDAY, APRIL 8, 1937.

PART IA

Orders and Notifications by the Government of India republished for general information.

LEGISLATIVE DEPARTMENT.

NOTIFICATION.

New Delhi, the 19th March 1937.

No. F.-102/37-C. & G.—In pursuance of the provisions of sub-rule (2) of rule 26 of the Legislative Assembly Electoral Rules, the Governor General is pleased to nominate Mr. Arthur Shelden Hands, C.I.E., being an official, to be a Member of the said Legislative Assembly.

G. H. SPENCE,

Secy. to the Govt. of India.

HOME DEPARTMENT.

NOTIFICATIONS.

JUDICIAL.

New Delhi, the 12th March 1937.

No. F. 25/4/37.—The Honourable Mr. Justice Panckridge, a Judge of the High Court of Judicature at Fort William in Bengal, is granted leave from the 8th April to the 7th June 1937, both days inclusive, namely, leave on full allowances for one month and on half allowances for one month.

J. A. THORNE,

Joint Secy. to the Govt. of India.

POLICE.

The 18th March 1937.

No. F. 40/4/37.—Mr. P. C. Bamford, C.I.E., I.P., Deputy Director, Intelligence Bureau, Home Department, is granted leave for 6 months and 23 days—1 month and 17 days on average pay and the balance on half average pay—with effect from the afternoon of the 1st April 1937 or such subsequent date as he may avail himself of it.

• • • •

R. M. MAXWELL,

Secy. to the Govt. of India.

DEPARTMENT OF INDUSTRIES AND LABOUR.

NOTIFICATIONS.

New Delhi, the 22nd March 1937.

No. L.-3068.—In pursuance of sub-section (3) of section 1 of the Payment of Wages Act, 1936 (IV of 1936), the Governor-General in Council is pleased to appoint the 28th March 1937 as the date on which the said Act shall come into force.

New Delhi, the 18th March 1937.

No. L.-3050.—In exercise of the powers conferred by sub-section (4) of section 33 of the Factories Act, 1934 (XXV of 1934), the Governor-General in Council is pleased to make the following rules, the same having been previously published as required by sub-section (*1*) of section 79 of the said Act, namely:—

RULES.

1. (*a*) *Title and application.*—These rules may be called the Hazardous Occupations (Lead) Rules, 1937.

(*b*) They shall apply to all factories in which any operation specified in the Schedule is carried on.

2. *Declaration of occupations as Hazardous.*—The operations specified in the Schedule are declared to be hazardous operations when carried on in any factory.

3. (1) *Definition of "lead compound".*—In these rules "lead compound" means any compound of lead, other than galena, or any mixture which contains a compound of lead, other than galena (but does not include an alloy containing lead):

Provided that the compound or mixture when subjected to the treatment prescribed in sub-rule (3) yields to an aqueous solution of hydrochloric acid a quantity of soluble lead compound exceeding, when calculated as lead monoxide, five per cent. of the dry weight of the portion taken for analysis.

(2) In the case of paints and similar products and other mixtures containing oil or fat the "dry weight" means the dry weight of the material remaining after the substance has been thoroughly mixed and treated with suitable solvents to remove oil, fats, varnish or other media, and the treatment referred to in sub-rule (1) shall be applied to the material so remaining.

(3) The treatment referred to in sub-rule (1) shall be as follows:—

A weighed quantity of the material which has been dried at 100°C and thoroughly mixed shall be continuously shaken for one hour, at the common temperature, with 1,000 times its weight of an aqueous solution of hydrochloric acid containing 0·25 per cent. by weight of hydrogen chloride. This solution shall thereafter be allowed to stand for one hour and then filtered. The lead salt contained in the clear filtrate shall then be precipitated as lead sulphide and weighed as lead sulphate.

4. *Sampling.*—When an Inspector of Factories suspects that any substance used or intended for use in any factory contains a lead compound he may at any time take for analysis sufficient samples of that substance:

Provided that the manager of the factory may, at the time when a sample is taken and on providing the necessary appliances, require the Inspector to divide the sample into two parts and to make and seal and deliver to him one such part.

5. *Prohibition of employment of women, adolescents and children.*—No woman, adolescent or child shall be employed in any factory in any of the operations specified in items (*i*) to (*vii*) inclusive of the Schedule.

6. *Medical certification and examination.*—(1) No person shall be employed in any factory for more than 15 days in the year, in any of the operations specified in the Schedule unless a special certificate of fitness in the Form appended to these rules granted to him by a certifying surgeon appointed under section 12 of the Factories Act, 1934, is in the custody of the manager of the factory.

(2) The Chief Inspector of Factories may require that any person granted a certificate under sub-rule (1) shall carry with him while at work a token giving reference to such certificate.

(3) Every person so employed shall be medically examined by a certifying surgeon or by a registered medical practitioner specially appointed by the Local Government to be a certifying surgeon for the purpose of these rules, at intervals of not more than six months, and a record of such examinations shall be entered in the Form appended to these rules and be preserved by the manager of the factory.

(4) If at any time the certifying surgeon is of opinion that any person is no longer fit for employment in any of the operations specified in the Schedule, he shall cancel the special certificate of fitness of that person.

(5) No person whose special certificate of fitness has been cancelled shall be employed in any of the operations specified in the Schedule unless the certifying surgeon again certifies him to be fit.

7. *Exhaust draughts.*—Where gas, dust or fume is produced in any of the operations specified in the Schedule, provision shall be made for removing the gas, dust or fume by means of an efficient exhaust draught so contrived as to operate on the gas, dust or fume as closely as possible to the point of origin:

Provided that where the provision of an efficient exhaust draught is not reasonably practicable the Inspector of Factories may require:—

(*a*) respirators of a type approved by him to be provided and maintained in a clean and efficient condition by the occupier and worn by every person working under such conditions:

(*b*) the damping of floors, apparatus and material to prevent the raising of dust.

Explanation.—"Efficient exhaust draught" means localised ventilation effected by heat or mechanical means, for the removal of gas, vapour, dust or fumes so as to prevent them (as far as practicable under the atmospheric conditions usually prevailing) from escaping into the air of any place in which work is carried on. No draught shall be deemed efficient which fails to remove smoke generated at the point where such gas, vapour, fumes or dust originate.

8. *Floors and work-benches.*—(1) The floor of every room, in which any person is employed on any of the operations specified in items (*i*) to (*vi*) of the Schedule, shall be of smooth cement or other smooth impervious material.

(2) The top of every work-bench in every such room shall be of smooth impervious material.

(3) The said floors and work-benches shall be kept clean and in good condition.

(4) The Chief Inspector of Factories may require by order in writing the said floors and work-benches to be kept wet in such manner as he may deem suitable, in order to reduce dust.

9. *Washing facilities.*—The occupier shall provide and maintain in a cleanly state and in good repair for the use of persons employed on any of the operations specified in the Schedule either—

(i) a trough with a smooth impervious surface fitted with a waste pipe without plug, and of sufficient length to allow at least two feet for every five such persons employed at any one time, and having a constant supply of water from taps or jets above the trough at intervals of not more than two feet; or

(ii) at least one lavatory basin for every five such persons employed at any one time, fitted with a waste pipe and plug, having a constant supply of water;

together with, in either case, a sufficient supply of nail brushes, soap or other suitable cleansing material, and clean towels.

10 *Food, drink and tobacco.*—(1) No food, drink, *pansupari*, or tobacco shall be brought into any room in which any person is employed upon any of the operations specified in the Schedule.

(2) No food, drink, *pansupari*, or tobacco shall be consumed in any room in which any person is employed upon any of the operations specified in the Schedule.

11. *Protective clothing.*—Adequate protective clothing such as overalls in a clean condition shall be provided by the occupier and worn by every person employed on any of the operations specified in the Schedule.

12. *Tools and apparatus.*—All tools and apparatus used in any operation specified in the Schedule and all rooms in which such operations are carried on shall be kept clean.

13. The Chief Inspector of Factories may grant exemption from the operation of rule 8, 9, 10 (1) or 11 to the extent he deems suitable, where he is satisfied that their observance is not necessary for safeguarding the health of the operatives.

SCHEDULE.

(*i*) Work at a furnace where the reduction or treatment of zinc or lead ores is carried on;

(*ii*) The manipulation, treatment, or reduction of ashes containing lead, the desilverising of lead or the refining of dross containing lead;

(*iii*) The manufacture of alloys containing more than ten per cent. of lead;

(*iv*) The manufacture of any oxide, carbonate, sulphate, chromate, acetate, nitrate, or silicate of lead;

(*v*) Handling or mixing of lead tetra ethyl;

(*vi*) Mixing or pasting in connection with the manufacture or repair of electric accumulators;

(*vii*) The cleaning of work-rooms where any of the processes aforesaid are carried on;

(*viii*) Every other manufacturing operation involving the use of any lead compound or the cleaning of work-rooms where any such operation is carried on.

FORM.

SPECIAL CERTIFICATE OF FITNESS.

In respect of persons employed in operations involving the use of lead compounds.

[Rule 6 of the Hazardous Occupations (Lead) Rules, 1937.]

Serial No.

Date

I HEREBY certify that I have personally examined (named) son/daughter/wife of (caste, etc.) residing at who is desirous of being employed for more than 15 days in a year as in the Factory and that his/her age as nearly as can be ascertained from my examination is years and that he/she is in my opinion fit for employment at work involving the use of lead compounds, until . His/her descriptive marks are

Left thumb impression of person examined.

Certifying Surgeon.

I certify that I re-examined the person mentioned above on—	I extend this certificate until—	Signature of certifying Surgeon.	Note of symptoms of lead poisoning (if any).

No. L.-3050 (1).—In exercise of the powers conferred by sub-section (*4*) of section 33 of the Factories Act, 1934 (XXV of 1934), the Governor-General in Council is pleased to make the following rules, the same having been previously published as required by sub-section (*1*) of section 79 of the said Act, namely:—

RULES.

1. (*a*) *Title and application.*—These rules may be called the Hazardous Occupations (Miscellaneous) Rules, 1937.

(*b*) They shall apply to all factories in which any operation specified in the Schedule is carried on.

2. *Declaration of operations as hazardous.*—The operations specified in the Schedule are declared to be hazardous operations when carried on in any factory.

3. *Prohibition of the employment of children and adolescents.*—(*1*) No child shall be employed in any factory in any of the operations specified in the Schedule.

(*2*) No adolescent shall be employed in any factory in any of the operations specified in items 1 to 7 inclusive of the Schedule.

(*3*) No female adolescent shall be employed in any factory in any of the operations specified in items 8 and 9 of the Schedule.

Schedule.

1. The manufacture or recovery of any of the following:—

(*a*) Carbonates, chromates, chlorates, oxides or hydroxides of potassium, sodium, iron, aluminium, cobalt, nickel, arsenic, antimony, zinc or magnesium,

(*b*) Ammonia and the hydroxide and salts of ammonium.

(*c*) Sulphurous, sulphuric, nitric, hydrochloric, hydrofluoric, hydriodic, hydrosulphuric, boric, phosphoric, arsenious, arsenic, lactic, acetic, oxalic, tartaric or citric acids and their metallic or organic salts, and

(*d*) Cyanogen compounds.

2. A wet process,

(*a*) when carried on for the extraction of metal from ore or from any by-product or residual material; or

(*b*) in which electrical energy is used in any process of chemical manufacture.

3. The manufacture or production of carbon disulphide or the production or use of hydrogen sulphide.

4. The manufacture of bleaching powder or the production or use of chlorine gas in any process of chemical manufacture.

5. The distillation or use of gas tar or coal tar, or any product or residue of such tars, in any process of chemical manufacture.

6. The utilization of nitric acid in the manufacture of nitro compounds.

7. The manufacture of explosives with the use of nitro compounds.

8. Melting and blowing glass and mixing, grinding and sieving glass-making materials.

9. Vitreous enamelling.
10. Handling wool, hair, bristles, hides and skins.
11 Mixing, grinding and sieving ceramic materials in the dry state.
12. Grinding materials for the manufacture of portland cement and burning and grinding cement clinker, in portland cement factories.
13. Mixing and handling yellow orpiment.

No. L.-3050 (2).—In exercise of the powers conferred by sub-section (*4*) of section 33 of the Factories Act, 1934 (XXV of 1934), the Governor-General in Council is pleased to make the following rules, the same having been previously published as required by sub-section (*1*) of section 79 of the said Act, namely:—

RULES.

1. (*a*) *Title and application.*—These rules may be called the Hazardous Occupations (Aerated Waters) Rules, 1937.

(*b*) They shall apply to all factories in which the manufacture of aerated waters and processes incidental thereto are carried on.

2. *Declaration of operations as hazardous.*—The manufacture of aerated waters and processes incidental thereto are declared to be hazardous operations when carried on in any factory.

3. *Fencing of machines.*—All machines for filling bottles or syphons shall be so constructed, placed or fenced, as to prevent as far as may be practicable a fragment of a bursting bottle or syphon from striking any person employed in the factory.

4. *Face guards and gauntlets.*—(*1*) The occupier shall provide and maintain in good condition for the use of all persons engaged in filling bottles or syphons:—

(*a*) suitable face guards to protect the face, neck and throat, and

(*b*) suitable gauntlets for both arms to protect the whole hand and arms:

Provided that:—

(i) this rule shall not apply where bottles are filled by means of an automatic machine so constructed that no fragment of a bursting bottle can escape, and

(ii) where a machine is so constructed that only one arm of the bottler at work upon it is exposed to danger, a gauntlet need not be provided for the arm which is not exposed to danger.

(*2*) The occupier shall provide and maintain in good condition for the use of all persons engaged in corking, crowning, screwing, wiring, foiling, capsuling, sighting, or labelling bottles or syphons—

(*a*) suitable face guards to protect the face, neck and throat, and

(*b*) suitable gauntlets for both arms to protect the arm and at least half of the palm and the space between the thumb and forefinger.

5. *Wearing of face guards and gauntlets.*—All persons engaged in any of the processes named in rule 4 shall, while at work in these processes, wear the face guards and gauntlets provided in pursuance of these rules.

No. L.-3050 (3).—In exercise of the powers conferred by sub-section (*4*) of section 33 of the Factories Act, 1934 (XXV of 1934), the Governor-General in Council is pleased to make the following rules, the same having been previously published as required by sub-section (*1*) of section 79 of the said Act, namely:—

RULES.

1. (*a*) *Title and application.*—These rules may be called the Hazardous Occupations (Rubber) Rules, 1937.

(*b*) They shall apply to all factories in which the operations specified in rule 2 are carried on.

2. *Declaration of operations as hazardous.*—Work on a rubber mixing machine and the use of any organic solvents in the manufacture of goods containing rubber, are declared to be hazardous operations when carried on in any factory.

3. *Prohibition of the employment of children.*—No child shall be employed in any factory on any of the operations specified in rule 2.

4. *Exhaust draughts.*—An efficient exhaust draught shall be provided by mechanical means for any process in which an organic solvent is used in the manufacture of goods containing rubber. The draught shall operate on the vapour given off in the process as near as may be at the point of origin, so as to prevent it (as far as practicable under the atmospheric conditions usually prevailing) from escaping into the air of any place in which work is carried on.

No. L.-3050 (4).—In exercise of the powers conferred by sub-section (*4*) of section 33 of the Factories Act, 1934 (XXV of 1934), the Governor-General in Council is pleased to make the following rules, the same having been previously published as required by sub-section (*1*) of section 79 of the said Act, namely:—

RULES.

1. (*a*) *Title and application.*—These rules may be called the Hazardous Occupations (Chromium) Rules, 1937.

(*b*) They shall apply to all factories in which any operation involving the use of soluble chromium compounds is carried on.

2. *Declaration of operations as hazardous.*—Operations involving the use of soluble chromium compounds are declared to be hazardous operations when carried on in any factory.

3. *Prohibition of the employment of women, children and adolescents.*—No woman, child or adolescent shall be employed in any factory in any of the operations specified in rule 2.

4. *Protective clothing.*—(*a*) The occupier shall provide water-proof aprons (of a pattern approved by the Chief Inspector of Factories) or overalls in a clean condition which every person employed on any of the operations specified in rule 2 shall wear.

(*b*) The occupier shall provide loose fitting rubber gloves of suitable length and rubber boots or other waterproof footwear for the use of those working at any vessel in which the electrolytic plating or oxidation of metal articles by the use of an electrolyte containing chromic acid or other chromium compounds, or any process subsequent thereto, is carried on:

Provided that the Chief Inspector of Factories may grant exemption from any or all the provisions of this rule where he is satisfied that they are not necessary to secure the health of the workers.

5. *Exhaust draughts.*—An efficient exhaust draught shall be provided by mechanical means for the process of electrolytic plating or oxidation of metal articles by the use of an electrolyte containing chromic acid or other chromium compounds. The draught shall operate on the vapour or spray given off in the process as near as may be at the point of origin, so as to prevent it (as far as practicable under the atmospheric conditions usually prevailing) from escaping into the air of any place in which work is carried on.

No. L.-3050 (5).—In exercise of the powers conferred by sub-section (*4*) of section 33 of the Factories Act, 1934 (XXV of 1934), the Governor-General in Council is pleased to make the following rules, the same having been previously published as required by sub-section (*1*) of section 79 of the said Act, namely:—

RULES.

1. (*a*) *Title and application.*—These rules may be called the Hazardous Occupations (Cellulose Spraying) Rules, 1937.

(*b*) They shall apply to all factories in which the spraying of cellulose ester paints and lacquers is carried on.

2. *Declaration of operation as hazardous.*—The spraying of cellulose ester paints, or lacquers, is declared to be a hazardous operation when carried on in any factory.

3. *Prohibition of the employment of children and adolescents.*—No child or adolescent shall be employed in any factory on the operation specified in rule 2.

4. *Exhaust draughts.*—An efficient exhaust draught shall be provided by mechanical means for the process specified in rule 2. The draught shall operate on the vapour given off in the process as near as may be at the point of origin so as to prevent it (as far as practicable under the atmospheric conditions usually prevailing) from escaping into the air of any place in which work is carried on. The draught shall be maintained working for a period of at least five minutes after the cessation of the operation:

Provided that the Chief Inspector of Factories may grant exemption from the provisions of this rule if he is satisfied that due to the casual nature of the operation they are not necessary to secure the health of the workers.

5. *Position of spray operators.*—Arrangement shall, as far as practicable, be made so as to render it unnecessary for the person operating the spray to be in a position between a ventilating outfit and the article being sprayed.

No. L.-3050 (6).—In exercise of the powers conferred by sub-section (*4*) of section 33 of the Factories Act, 1934 (XXV of 1934), the Governor-General in Council is pleased to make the following rules, the same having been previously published as required by sub-section (*1*) of section 79 of the said Act, namely:—

RULES.

1. (*a*) *Title and application.*—These rules may be called the Hazardous Operations (Sand Blasting) Rules, 1937.

(*b*) They shall apply to all factories in which the operation of sand blasting, as defined in rule 2, is carried on.

2. *Definition.*—In these rules "sand blasting" means the use of a jet of sand, metal shot, grit or other abrasive, propelled by a blast of compressed air or steam.

3. *Declaration of operation as hazardous.*—Sand blasting is declared to be a hazardous operation when carried on in any factory.

4. *Prohibition of the employment of women, adolescents and children.*—No woman, adolescent or child shall be employed in any factory on sand blasting.

5. (*1*) *Protective clothing.*—No person shall be allowed to perform or to assist at sand blasting in the open air or to work within 30 feet of sand blasting apparatus in operation in the open air, unless he is wearing a suitable protective helmet and gauntlets.

(*2*) No person shall be allowed to work in or remain in a sand blasting chamber unless he is wearing a suitable protective helmet, overalls and gauntlets, or to insert his arm or hand into the chamber unless he is wearing a suitable gauntlet, while sand blasting is being carried on.

(*3*) The occupier shall provide and maintain in good condition all helments, gauntlets and overalls necessary for compliance with sub-rules (*1*) and (*2*).

(*4*) A protective helmet shall not be considered suitable unless it carries the distinguishing mark of the person to whom it is issued and by whom it is intended to be used and is provided with a sufficient supply of pure air for breathing and ventilation, together with suitable arrangements to permit the escape of the expired air.

(*5*) No person shall wear a protective helmet that has been worn by another person unless and until such protective helmet shall have been thoroughly disinfected.

The 22nd March 1937.

No. M.-826 (1).—In exercise of the powers conferred by sub-section (*1*) of section 13 of the Petroleum Act, 1934 (XXX of 1934), read with section 22 of the General Clauses Act, 1897 (X of 1897), the Governor-General in Council is pleased to authorise the officers specified in the first column of the annexed Schedule to exercise the powers mentioned in the said sub-section in the areas specified in the corresponding entry in the second column of that Schedule.

THE SCHEDULE.

	Officers.	Areas.
1.	The Chief Inspector, Inspectors and Assistant Inspectors of Explosives.	All parts of British India including British Baluchistan and the Sonthal Parganas.
2.	All District Magistrates	Their respective districts.
3.	All Magistrates subordinate to the District Magistrate.	Their respective jurisdictions.
4.	The Commissioner of Police and all Police Officers of rank not below that of Inspector.	Presidency towns and their suburbs and Rangoon.
5.	All Police Officers of rank not below that of Inspector.	The respective areas over which their authority extends.

No. M.-826 (2).—In exercise of the powers conferred by sub-section (*1*) of section 14 of the Petroleum Act, 1934 (XXX of 1934), read with section 22 of the General Clauses Act, 1897 (X of 1897), the Governor-General in Council is pleased to authorise the officers specified in the first column of the annexed Schedule to exercise the powers mentioned in the said sub-section in the areas specified in the corresponding entry in the second column of that Schedule.

THE SCHEDULE.

	Officers.	Areas.
1.	The Chief Inspector, Inspectors and Assistant Inspectors of Explosives.	All parts of British India including British Baluchistan and the Sonthal Parganas.
2.	All District Magistrates	Their respective districts.
3.	All Magistrates subordinate to the District Magistrate.	Their respective jurisdictions.
4.	The Commissioner of Police and all Police Officers of rank not below that of Inspector.	Presidency towns and their suburbs and Rangoon.
5.	All Police Officers of rank not below that of Inspector.	The respective areas over which their authority extends.
6.	The Warden of the Burma Oilfields, Assistant Warden and the Petroleum Inspector, Yenangyaung.	Oilfields notified under section 3 of the Burma Oilfields Act, 1918.
7.	Inspectors, Examiners and Senior Preventive Officers, Custom House, Madras.	The Port of Madras.

	Officers.	Areas.
8.	Port Officer, Cocanada ..	The Port of Cocanada.
9.	Port Officer, Tuticorin ..	The Port of Tuticorin.
10.	All Officers of Customs not lower in rank than a Sub-Inspector in the Madras Presidency.	Ports in the Madras Presidency other than Madras, Cocanada and Tuticorin.
11.	Preventive Officers, Custom House, Bombay.	The Port of Bombay.
12.	Preventive Officers, Custom House, Karachi.	The Port of Karachi.
13.	The Preventive Officer in charge, Budge Budge.	Budge Budge.
14.	The Preventive Officer in charge, King George's Dock Oil Installations.	King George's Docks, Port of Calcutta.
15.	Preventive Officers and Appraisers, Custom House, Calcutta.	Jetties within the Port of Calcutta.
16.	Preventive Officers, Custom House, Chittagong.	The Port of Chittagong.
17.	Preventive Officers, Burma Customs ..	Ports in Burma.
18.	Inspecting Officer of Customs, Castle Rock.	Castle Rock.
19.	Inspecting Officer of Customs at Viramgam.	Those parts of British India lying within one mile of any point on the Viramgam Customs Line.

No. M.-826 (3).—In exercise of the powers conferred by sub-section (*1*) of section 26 of the Petroleum Act, 1934 (XXX of 1934), read with section 22 of the General Clauses Act, 1897 (X of 1897), the Governor-General in Council is pleased to authorise the officers specified in the first column of the annexed Schedule to exercise the powers mentioned in the said sub-section in the areas specified in the corresponding entry in the second column of that Schedule.

THE SCHEDULE.

	Officers.	Areas.
1.	The Chief Inspector, Inspectors and Assistant Inspectors of Explosives.	All parts of British India including British Baluchistan and the Sonthal Parganas.
2.	All District Magistrates	Their respective districts.
3.	All Magistrates subordinate to the District Magistrate.	Their respective jurisdictions.
4.	The Commissioner of Police and all Police Officers of rank not below that of Inspector.	Presidency towns and their suburbs and Rangoon.
5.	All Police Officers of rank not below that of Sub-Inspector.	The respective areas over which their authority extends.

The 23rd March 1937.

No. M.-826(1).—In exercise of the powers conferred by sub-section (*1*) of section 30 of the Petroleum Act, 1934 (XXX of 1934), read with section 22 of the General Clauses Act, 1897 (X of 1897), the Governor-General in Council is pleased to apply to calcium phosphide the provisions of sections 2-4, 12-14, 23-29 and 31 of the first-mentioned Act.

No. M.-826(3).—In exercise of the powers conferred by proviso (e) to section 6 of the Petroleum Act, 1934 (XXX of 1934), read with section 22 of the General Clauses Act, 1897 (X of 1897), the Governor-General in Council is pleased to exempt from the operation of the first-mentioned section—

(i) tanks within installations or refineries or at or near oil wells; and

(ii) receptacles in the possession of His Majesty's forces.

No. M.-826(4).—In exercise of the powers conferred by section 12 of the Petroleum Act, 1934 (XXX of 1934), read with section 22 of the General Clauses Act, 1897 (X of 1897), the Governor-General in Council is pleased to exempt from all the provisions of Chapter I of the first-mentioned Act—

(i) petroleum which is in the possession of any officer of Government for the purpose of the performance by him of any duties entrusted to him by or under the first-mentioned Act or any rules made under it; and

(ii) Turpentine, Turpentine Oil and Spirits of Turpentine, when derived wholly from the various species of *pinus*.

No. M.-826(5).—In pursuance of sub-section (*3*) of section 1 of the Petroleum Act, 1934 (XXX of 1934), the Governor-General in Council is pleased to appoint the 30th March 1937 as the date on which the said Act shall come into force.

No. M-826 (6).—In exercise of the powers conferred by section 4, sub-section (*2*) of section 5, sub-section (*2*) of section 14, sections 21 and 22 and sub-section (*1*) of section 29 of the Petroleum Act, 1934 (XXX of 1934), read with section 22 of the General Clauses Act, 1897 (X of 1897), the Governor-General in Council is pleased to make the following rules which have been previously published as required by sub-section (*2*) of section 29 of the first-mentioned Act, namely:—

RULES.

CHAPTER I.

Preliminary.

1. *Short title and application.*—(1) These rules may be called the Petroleum Rules, 1937.

(2) The application of these rules to Burma shall be subject to the modifications contained in Schedule IV.

(3) The application of these rules to Aden shall be subject to the modifications contained in Schedule V.

2. *Supersession and savings.*—(1) All notifications and rules issued, and all appointments made, by local Governments under the Indian Petroleum Act, 1899, and all rules made by the Governor General in Council under section 8 of that Act are hereby superseded, but—

(*i*) all licences or duplicates granted or renewed and all fees imposed or levied shall be deemed to have been respectively granted, renewed, imposed or levied under these rules; and

(*ii*) all approval given and all powers conferred by or under any notification or rule so superseded shall, so far as they are consistent with the Act and these rules, be deemed to have been given or conferred by or under these rules.

(2) Anything not in conformity with these rules which was permitted to be done by or under any rule in force immediately before the coming into force of these rules, and which, under these rules, may be permitted by the Chief Inspector to be done, shall be deemed to have been so permitted by the Chief Inspector, unless the Chief Inspector, after such notice of his intention as he considers reasonable, declares that it is not so permitted.

3. *Definitions.*—In these rules, unless there is anything repugnant in the subject or context,—

(*a*) "The Act" means the Petroleum Act, 1934;

(*b*) "Chief Inspector" means the Chief Inspector of Explosives in India;

(*c*) "Conservator of the Port" includes any person acting under the authority of the officer or body of persons appointed to be Conservator of the Port under section 7 of the Indian Ports Act, 1908;

(*d*) "District Authority" means—

(*i*) in a Presidency-town, or its suburbs, the Commissioner of Police; and

(*ii*) elsewhere, the District Magistrate;

(*e*) "District Magistrate" includes an "Additional District Magistrate";

(*f*) "Heavy petroleum" means petroleum which has its flashing-point not below 150°F.;

(*g*) "Inspector" means an officer authorised by the Governor General in Council under sub-section (*1*) of section 13 of the Act;

(*h*) "Installation" means any premises within which any place has been specially prepared for the storage of petroleum in bulk, but does not include a well-head tank;

(*i*) "Petroleum in bulk" means petroleum contained in a receptacle exceeding two hundred gallons in capacity;

(*j*) "Protected works" includes—

(*a*) buildings, in which persons dwell or assemble, docks, wharves, timber yards and buildings or places where petroleum is stored; and

(*b*) any public road or other place which the Chief Inspector has by written order declared to be a protected work;

but does not include any building or place which forms part of an installation;

(*k*) "Sampling officer" means an officer authorised by the Governor General in Council under sub-section (1) of section 14 of the Act.

(*l*) "Storage shed" means a building used for the storage of petroleum otherwise than in bulk, whether it forms or does not form part of an installation, but does not include a building used for the storage of petroleum exempt from licence under sections 7, 8 or 9 of the Act;

(*m*) "Testing officer" means an officer authorised by the Governor General in Council to test petroleum under section 17 of the Act; and

(*n*) "Well-head tank" means a tank into which crude petroleum flowing or being pumped from a well is first discharged

4. *Excluded petroleum.*—Nothing in these rules, except Chapter IX, applies to petroleum which has its flashing-point not below 200°F.

CHAPTER I.

Importation of Petroleum.

PART I.—GENERAL.

5. *Licence for import of dangerous petroleum.*—Save as provided in sections 8, 9 and 10 of the Act, dangerous petroleum shall not be imported except under a licence granted under these rules.

6. *Petroleum exempted.*—(1) Nothing in this Chapter applies to—

(*a*) dangerous petroleum, not exceeding 6 gallons in quantity, which is not intended for sale;

(*b*) dangerous petroleum contained in any fuel tank incorporated in a motor conveyance;

(*c*) non-dangerous petroleum, comprised in a ship's stores and manifested as such, provided it is not of an unreasonably large amount.

(2) If any question arises as to whether any petroleum manifested as ship's stores is of an unreasonably large amount, the decision thereon of the Collector of Customs shall be final.

PART II.—IMPORTATION BY SEA.

7. *Importation by sea.*—(1) Petroleum shall not be imported by sea except into the ports of—

Bombay.	Karachi.
Calcutta.	Madras.
Calicut.	Malpe.
Chittagong.	Mangalore.
Cocanada.	Port Blair.
Cochin.	Tellichery.
Coondapur.	Tuticorin.
Hangarkatta.	Vizagapatam.

(2) Notwithstanding anything contained in sub-rule (1), non-dangerous petroleum not in bulk on which the duty leviable in British India has been paid may, subject to such conditions as the Collector of Salt Revenue, Bombay, may impose, be imported from Marmugao at

the following ports, if the petroleum is accompanied by a certificate in form G or by a certified copy of such certificate granted under rule 162 of these rules:—

Alibag, Revdanda, Bankot, Kelshi, Harnai, Dabhol, Borya, Jaigad, Varoda, Ratnagiri, Purnagad, Jaitapur, Viziadurg, Deogad, Achra, Malwan, Kochra, Vengurla, Kirnapani, Majali (Tilmati), Karawar, Sadashivgad, Chendya, Belekari, Ankola, Gangavali, Kodar, Tadri, Kumta, Manki, Murdeshvar, Shirali, Bhatkal and Honawar.

(3) Nothing in rules 8 to 11 and 13 to 15 shall apply to petroleum imported under sub-rule (2).

8. *Declaration by master of ship carrying petroleum or by the ship's agent.*—The master of every ship carrying petroleum shall deliver to the pilot, before entering any of the ports mentioned in sub-rule (1) of rule 7, a written declaration in Form A under his signature.

Provided that if, in anticipation of a ship's arrival, the agent for such ship delivers to the Conservator of the Port a written declaration as aforesaid under his signature, no such declaration need be made by the master of the ship.

9. *Delivery of certificate.*—If the master or agent declares that any petroleum which it is intended to land at that port or at any other port in British India is petroleum certified in accordance with rule 11 he shall deliver to the pilot or Conservator of the Port, as the case may be, along with his declaration, the certificate relating to such petroleum.

10. *Declaration and certificate to be forwarded to Collector of Customs.*—Every declaration and certificate delivered to a pilot under rules 8 and 9 shall be made over by him without delay to the Conservator of the Port, and every declaration and certificate received by the Conservator of the Port under rule 8 or rule 9 or this rule shall be forwarded by him, with all convenient despatch, to the Collector of Customs of the port.

11. *Certified petroleum.*—For the purposes of rules 9 and 156 and Form A, petroleum shall be deemed to be certified if it is accompanied by a certificate in Form B granted at the port of shipment or, subject to the approval of the Collector of Customs, in any other form containing the material particulars required by Form B, and has a flashing-point not below 76°F.:

Provided that the Collector of Customs may refuse to accept any certificate, if he is not satisfied as to its genuineness.

12. *Anchorage of ships carrying petroleum.*—Every ship having petroleum on board shall be anchored at such anchorage as the Conservator of the Port shall appoint in this behalf and shall not leave such anchorage without the general or special order of the Conservator of the Port and subject to such conditions as may be specified in such order. Such anchorage shall in no case be the same as that for vessels laden with explosives and shall be at such distance from the anchorage for vessels laden with explosives as to render it impossible for a fire originating at the former anchorage to affect vessels anchored at the latter.

13. *Production of certificate and licence for import.*—(1) Every person desiring to import petroleum shall furnish personally or through his agent to the Collector of Customs a certificate of storage accommodation in Form C signed by the said person or his agent:

Provided that, where the importer intends to import both dangerous and non-dangerous petroleum, separate Forms shall be furnished for dangerous and non-dangerous petroleum:

Provided further that this sub-rule shall not apply where the quantity of non-dangerous petroleum to be imported by any one consignee does not exceed 500 gallons, or where the quantity of dangerous petroleum to be so imported does not exceed 60 gallons.

(2) Every person desiring to import dangerous petroleum shall produce, personally or through his agent, before the Collector of Customs his licence for the import and storage of such petroleum.

14. *Permission of Collector of Customs to land petroleum.*—(1) No imported petroleum shall be landed except with the permission of the Collector of Customs.

(2) If the Collector of Customs, after receiving—

(*a*) the testing officer's report on any petroleum or, in the case of petroleum of Burmese origin a certificate containing the particulars required by Form B granted by a testing officer appointed by the Government of Burma;

(*b*) the certificate required by sub-rule (1) of rule 13; and

(*c*) the licence, if required by sub-rule (2) of rule 13;

and after making such further inquiries as he deems necessary, is satisfied that the petroleum can lawfully be imported and that there is suitable accommodation for it, he shall permit it to be landed.

(3) Nothing in this rule shall affect the power of the Collector of Customs to detain the petroleum under any other law or rule for the time being in force.

15. *Landing of non-dangerous petroleum in anticipation of the testing officer's report.*—(1) Notwithstanding anything contained in rule 14, where the consignee furnishes a guarantee to re-ship the petroleum if the testing officer's report proves unfavourable, the Collector of Customs may, in anticipation of the testing officer's report, permit any petroleum which he believes to be non-dangerous to be discharged into boats or to be landed.

(2) The permission granted under sub-rule (1) shall be subject to the condition that the boats into which the petroleum is discharged shall remain at such place as the Conservator of the Port may appoint or that the petroleum shall be landed at a landing-place duly appointed for this purpose by him and stored in an installation licensed under these rules.

16. *Unloading of petroleum in bulk.*—Subject to the rules in Part II of Chapter III, petroleum imported in bulk shall be discharged into storage tanks on shore either directly or by means of barges or lighters specially constructed for carrying petroleum in bulk and only at such places as the Conservator of the Port may by general or special order direct.

17. *Unloading of petroleum otherwise than in bulk.*—(1) Subject to the rules in Part II of Chapter III, petroleum imported otherwise than in bulk shall be landed either at jetties provided for the purpose, or in barges or lighters and only at such places as the Conservator of the Port shall direct.

(2) No petroleum contained in casks, drums or other receptacles shall be landed unless such receptacles are free from leakage and of such strength and construction as not to be liable to be broken or to leak except in case of gross carelessness or extraordinary accident:

Provided that petroleum contained in casks, drums or other receptacles which do not satisfy the requirements of this sub-rule may, subject to the rules in Part II of Chapter III and to such conditions as the Conservator of the Port may impose, be landed at a separate landing place approved for the purpose.

18. *Transhipment of petroleum.*—Petroleum may be transhipped from one ship to another for conveyance to any other port, whether within or beyond the limits of British India, subject to the rules in Part II of Chapter III.

19. *Heavy petroleum.*—(1) Nothing in rules 12 to 18 inclusive applies to heavy petroleum.

(2) Notwithstanding anything contained in the preceding rules, if the master of, or agent for, a ship produces a certificate that any petroleum on board is heavy petroleum, the Collector of Customs shall allow it to be discharged in the same manner as ordinary cargo:

Provided that the sampling officer may at any time require a sample of any of the petroleum to be delivered to him, with a view to having it tested.

PART III.—IMPORTATION BY LAND.

20. *Importation by land.*—Petroleum shall not be imported by land save in accordance with rules 21, 22 and 23.

21. *Importation through Castle Rock.*—Petroleum may be imported by land from Marmugao through Castle Rock if the petroleum, unless it is declared to be dangerous, is accompanied by a certificate in Form G or by a certified copy of such certificate granted under rule 162.

22. *Importation through the Viramgam Custom Line.*—Petroleum landed at Port Okha may be imported at the land customs stations on the Viramgam custom line if the customs authority is satisfied that the petroleum, unless it is declared to be dangerous petroleum, has been tested in the manner laid down in the Act and these rules.

23. *Importation from Karikal.*—(1) Non-dangerous petroleum may be imported from Karikal with the written permission of the Chief Inspector and subject to such conditions as he may impose.

(2) No such permission shall be granted to any applicant who was not importing petroleum *via* Karikal before the 1st January, 1935.

CHAPTER III.

Transport of Petroleum.

PART I.—GENERAL.

24. *Prevention of accidents.*—All due precaution shall be taken at all times to prevent accident by fire or explosion.

25. *Prevention of escape of petroleum.*—All due precautions shall be taken at all times to prevent any escape of petroleum during transport especially into any drain, sewer, harbour, river or water course.

26. *Empty receptacles.*—All empty tanks or other receptacles which have contained dangerous petroleum or which have contained non-dangerous petroleum in bulk shall, except when they are opened for the purpose of cleaning them and rendering them free from petroleum vapour, be kept securely closed unless they have been thoroughly cleaned and freed from petroleum vapour.

27. *Receptacles for dangerous petroleum.*—(1) Dangerous petroleum, if not in bulk, shall be contained in gas-tight tinned, galvanised or otherwise externally rust-proofed sheet iron or steel receptacles which shall be fitted with well-made filling apertures and well-fitting screw plugs, or with screw caps or other caps with metal air-tight under-caps. The receptacles shall be kept in proper repair.

(2) No receptacles, other than tanks on tank-carts of a type approved in writing by the Chief Inspector, shall be of more than 65 gallons capacity excluding the air-space prescribed by sub-rule (7).

(3) The receptacles, other than tanks on tank-carts, shall be of a type approved in writing by the Chief Inspector and shall have the following thickness of metal:—

Capacity exclusive of the prescribed air-space—

	Not less than—
not exceeding 2 gallons	... 27 B. G.
exceeding 2 but not exceeding 4 gallons	... 22 B. G.
exceeding 4 but not exceeding 30 gallons	... 18 B. G.
exceeding 30 but not exceeding 45 gallons	... 17 B. G.
exceeding 45 gallons	... 16 B. G.

(4) Where the approval of the Chief Inspector is sought to a type of receptacle not previously approved, three copies of a detailed drawing thereof to scale shall be forwarded to him.

(5) The receptacles shall be so constructed and secured as not to be liable, except under circumstances of gross negligence or extraordinary accident to become defective, leaky or insecure in transit.

(6) The receptacles shall bear a stamped, embossed, painted or printed warning exhibiting in conspicuous characters the words "Petrol" or "Motor Spirit" or an equivalent warning of the dangerous nature of the petroleum.

(7) An air-space of not less than 7½ per cent. of its capacity shall be left in each tank, drum or other receptacle containing dangerous petroleum.

(8) Nothing in sub-rules (1), (2), (3), (4) and (6) shall apply to receptacles in the possession of His Majesty's forces.

28. *Receptacles for non-dangerous petroleum.*—Non-dangerous petroleum, if not in bulk, shall be packed in air-tight tins or drums of steel or iron or in other receptacles not easily broken or in tanks permanently fixed to carts, wagons, boats or other means of carriage, and of types approved by the Chief Inspector:

Provided that, in the case of an unberthed passenger ship to which Part IV of the Indian Merchant Shipping Act, 1923 applies, the petroleum shall be packed either in tins enclosed in outer wooden cases or in hermetically sealed iron or steel drums or, if it is heavy petroleum, in sound well-coopered wooden casks of not more than 50 gallons capacity.

29. *Restriction on delivery and despatch of petroleum.*—(1) No person shall deliver any petroleum to any one other than the holder of a storage licence or his authorized agent or a Port Authority or railway administration.

(2) No person shall despatch any petroleum to any one other than the holder of a storage licence.

(3) Notwithstanding anything contained in sub-rule (2) non-dangerous petroleum not exceeding 3,000 gallons in quantity packed in sealed air-tight tins or drums of steel or iron may be despatched to a person not holding a storage licence, provided that the person despatching the petroleum has satisfied himself that prior arrangements have been made by the person to whom the petroleum is despatched for the immediate disposal in the original packages of any quantity in excess of 500 gallons.

(4) This rule shall not apply to the delivery or despatch of petroleum in quantities which are permitted by the Act or these rules to be stored without licence, or to any petroleum in the possession of His Majesty's forces.

PART II.—TRANSPORT BY WATER.

30. *Conditions of carriage of petroleum in bulk by water.*—Petroleum in bulk shall not be carried by water except in a ship or other vessel certified annually as suitable for the carriage of petroleum in bulk by an officer appointed by the Governor General in Council in this behalf, and the petroleum shall be stored in such part of the ship or other vessel and in such manner as may be approved by general or special order, by the officer so appointed after consultation with the Chief Inspector:

Provided that—

(*a*) nothing in this rule shall apply to ships importing petroleum;

(*b*) petroleum in tank-wagons may, with the permission in writing of the Chief Inspector and subject to such conditions as he may specify, be transported across a river by a recognised wagon ferry.

31. *Requirements as to construction of vessels.*—Every ship or other vessel carrying petroleum in bulk, other than a recognised wagon ferry permitted to transport tank-wagons under proviso (*b*) to rule 30, must be of steel or iron well and substantially constructed with scantlings of ample dimensions in proportion to the size of the vessel.

32. *Tank fittings on vessels.*—In petroleum tank-ships or other vessels used for the transport of petroleum other than heavy petroleum the following provisions shall apply:—

(*a*) all tanks shall be fitted with independent approved filling and suction pipes and valves or with stand-pipes with blank flanges, all pipes being carried down nearly to the bottom of the tanks, and no petroleum in bulk shall be taken on board or discharged except through such pipes and valves, unless otherwise permitted by the Chief Inspector in writing;

(*b*) all tanks shall be fitted with manholes having screwdown covers with petroleum-tight joints and, in the case of tanks intended for use with dangerous petroleum, with ventilators or relief valves of approved pattern properly protected with wire gauze of a mesh of not less than 28 to the linear inch; and

(*c*) ventilators similarly protected shall be fitted to all spaces around tanks:

Provided that the Chief Inspector may, by order in writing, exempt from the provisions of this rule any vessel which was employed in transporting petroleum in bulk before the 1st April, 1937.

33. *Self-propelled barges.*—The following conditions shall be observed in self-propelled barges transporting petroleum other than heavy petroleum:—

(*a*) the whole of the machinery shall be at the stern of the barge and shall be entirely separated from the cargo by a cofferdam consisting of two transverse petroleum-proof bulkheads separated by a space of at least two feet six inches;

(*b*) the barge shall be provided with a heavy wood belting; and

(*c*) suitable ventilators shall be fitted to the cargo space:

Provided that condition (*a*) shall not be applicable to any barge which was employed in transporting petroleum before the 1st April, 1937.

34. *Petroleum in bulk on barges or flats.*—(1) Petroleum in bulk shall not be transported in a barge or flat unless the barge or flat—

(*a*) is self-propelled and carries at least four fire extinguishers, or

(*b*) is in tow of, or otherwise attended by, a steamer or tug carrying at least four fire extinguishers.

(2) The fire extinguishers referred to in sub-rule (1) shall be of a pattern approved by the officer appointed under rule 30 and shall be fitted in positions approved by him.

35. *Inflammable cargo, or passengers.*—(1) No ship or other vessel shall carry petroleum in bulk if it is carrying passengers, or any inflammable cargo other than petroleum or coal.

(2) This rule shall not apply to heavy petroleum used as fuel and carried in cellular double bottoms under engine and boiler compartments and under ordinary holds, and in peak tanks, deep tanks or bunkers of approved construction; such oil fuel storage tanks and installations connected therewith shall comply with the provisions of rules 228 to 243 of the Indian Merchant Shipping (Construction and Survey of Passenger Steamers) Rules, 1935.

36. *Restrictions as to inflammable cargo.*—(1) No steamer or tug employed in towing or otherwise attending a barge, flat or lighter carrying petroleum, other than heavy petroleum, in bulk shall at the same time tow or otherwise attend any other vessel carrying an inflammable cargo other than petroleum or coal.

(2) No such steamer or tug shall carry any inflammable cargo other than petroleum or coal.

(3) All such steamers or tugs shall be fitted with efficient spark arresters.

37. *Ventilation and cleaning of holds and tanks.*—(1) Before any petroleum is discharged from a ship or vessel the holds of such vessel shall be thoroughly ventilated:

Provided that nothing in this sub-rule shall apply to any vessel carrying dangerous petroleum not exceeding 6 gallons or non-dangerous petroleum not exceeding 500 gallons or heavy petroleum not in bulk.

(2) After all petroleum has been discharged from any such vessel the holds, tanks and bilges of the vessel shall be rendered free from inflammable vapour.

(3) Sub-rule (2) shall not apply to the tanks of a ship importing petroleum which leaves the port without delay after the discharge of cargo or remains only, for the purpose of taking on board bunkers stores or ballast or for such other purposes as may be approved by the Conservator of the Port, if the tanks of every such ship are securely fastened down immediately after the discharge of the cargo.

(4) Sub-rule (2) shall not apply to barges or lighters continuously engaged in the transport of petroleum in bulk,—

(*a*) an interval of not more than 72 hours is likely to elapse between an operation of unloading or discharging and the next loading operation; and

(*b*) the tanks are securely fastened down immediately after unloading.

(5) Sub-rule (2) shall not apply to specially constructed steel tank motor-vessels approved by the Chief Inspector which are engaged in transport of petroleum in bulk on such rivers and on such parts thereof as may be approved by him in areas outside port limits, or by the Conservator of the Port within port limits, if the tanks of such vessels are securely fastened down immediately after unloading and the vessels depart not later than 12 hours after completion of discharge for their next place of loading.

(6) All ships or other vessels which by sub-rules (3), (4) or (5) are exempted from the application of sub-rule (2) shall, until their holds and tanks have been rendered free from inflammable vapour, comply with all the rules applicable to ships, or other vessels when carrying petroleum in bulk.

38. *Master of vessel specially responsible.*—The master or other officer in charge of any ship with petroleum on board or of any vessel certified under rule 30 shall be responsible that—

(*a*) all due precautions are taken for the prevention of accident in the loading or discharge of petroleum;

(*b*) so long as there is petroleum or inflammable vapour in a tank, all openings from the tank to the atmosphere, except the gas escape line, are kept closed and locked or otherwise fastened in a manner certified as satisfactory by the officer appointed under rule 30; and when it is necessary to take dips or samples, the ullage plugs or sighting ports are closed immediately this has been done;

Provided that, subject to the provisions of clause (*c*), such master or officer in charge may cause the necessary openings to be opened or unlocked for the purpose of taking on board or discharging non-dangerous petroleum, for cleaning the tanks, or for other sufficient reason;

(*c*) every person entering a tank wears a safety helmet of a description approved by the Chief Inspector, unless a Conservator of the Port or other officer appointed by the Governor General in Council in this behalf has examined the tank with the aid of a vapour-testing instrument and has certified it to be free from dangerous vapour;

(*d*) the vessel and any steamer or tug towing or otherwise attending on such vessel exhibits conspicuously:—

(*i*) from sunrise to sunset a red flag not less than three feet square with a white circular centre six inches in diameter, if dangerous petroleum is carried, and a red flag not less than three feet square if non-dangerous petroleum is carried; and

(*ii*) from sunset to sunrise such warning lights as may be required by the Conservator of the Port;

(*e*) the vessel, when carrying petroleum in bulk, at all times lies afloat unless otherwise permitted by general or special order in writing of the Chief Inspector or the Conservator of the Port;

(*f*) the vessel, when carrying petroleum in bulk, is constantly under the control and personal supervision of a responsible person;

(*g*) iron or steel hammers or other instruments capable of causing a spark are not used for the purpose of opening or closing the hatches or tank covers; and

(*h*) footwear which exposes any iron or steel is not worn on the deck of any vessel while the loading or unloading of dangerous petroleum is proceeding.

39. *Loading and unloading by night.*—(1) Where adequate electric lighting is installed and rule 105 is complied with, tank-ships and barges may discharge or load non-dangerous petroleum at any time and tank-ships and barges which have commenced the discharge into storage tanks on shore, or loading into their own tanks, of dangerous petroleum in bulk before sunset may continue the said discharge or loading.

(2) Should anything occur during discharging or loading dangerous petroleum after sunset which necessitates a repair or disconnection of the plant pipes or connections, such discharging or loading shall be discontinued until after sunrise.

(3) Save as provided by sub-rule (1), petroleum shall not be discharged or loaded or landed between the hours of sunset and sunrise.

(4) This rule shall not apply to the refueling of aircraft by vessels certified under rule 30, subject to any conditions which the Chief Inspector may impose in this behalf.

40. *Loading and discharge of bulk petroleum.*—(1) The loading and discharge of petroleum in bulk shall be by armoured hose and metal pipes.

(2) All pipes and other appliances used in the landing or loading of petroleum in bulk shall be free from leakage.

(3) When a ship has finished discharging petroleum other than heavy petroleum, the pipe line shall be immediately emptied of petroleum by pumping water through the line.

(4) The Chief Inspector may, by written order, grant exemptions in any particular case from the provisions of sub-rules (1) and (3).

41. *Precautions on suspension of loading or discharge.*—When the loading or landing of petroleum has been commenced such loading or landing shall proceed with due diligence, and if it is discontinued, the tanks and holds of the ships or other vessels concerned and all loading or discharge valves shall be closed immediately.

42. *Naked lights, fire and smoking on board a vessel prohibited.*—No fire, naked light, fusees, matches, or other appliance for producing ignition or explosion and no smoking shall be allowed on board any barge, flat or lighter carrying petroleum in bulk, or on board any such vessel used for the transport of dangerous petroleum otherwise than in bulk or for the transhipment of petroleum to or from any vessel within the limits of any port:

Provided that nothing in this rule shall prevent the use on a self-propelled barge of the machinery of propulsion.

43. *Smoking, fire and lights prohibited during loading and unloading.*—At all times during the loading or unloading of a ship or other vessel until such time as all petroleum shall have been loaded into or removed from the holds or tanks and the holds or tanks shall have been securely closed down and, in the case of landing, rendered free from inflammable vapour, there shall be no fire or artificial light or smoking on board such ship or other vessel or within 100 feet of the place where the petroleum is being loaded or landed:

Provided that this rule shall not apply to the use of lamps, cookers or other similar apparatus, electric or otherwise, so designed, constructed and maintained as to be incapable of igniting inflammable vapour or, in the case of heavy petroleum, the use of galley fires:

Provided further that this rule shall not apply to the discharging or loading of a ship, under conditions approved by the Conservator of the Port, by means of steam from her own boilers or power generated by electric motors or internal combustion engines placed in a position away from cargo holds and pumprooms or by means of electric motors so designed, constructed and maintained as to be incapable of igniting inflammable vapour and maintained in accordance with Lloyd's or any other approved classification society's requirements.

44. *Matches.*—No person engaged in landing or loading petroleum shall carry fusees, matches, or any other appliance for producing ignition or explosion.

45. *Fire-extinguishing appliances to be ready for use.*—Vessels discharging or loading petroleum shall have adequate fire-extinguishing appliances so disposed that they can be put into immediate use, and, if the petroleum is dangerous petroleum, shall have their awnings furled.

46. *Restriction on the conveyance of petroleum.*—Dangerous and non-dangerous petroleum shall not be simultaneously conveyed to the shore or to another ship on the same vessel.

47. *Restriction as to leaky tins.*—Leaky tins or other receptacles containing petroleum shall not be discharged into a vessel containing sound tins or other sound receptacles.

48. *Transport by sea of petroleum which has not been tested.*—(1) Petroleum which has been imported into any port specified in sub-rule (1) of rule 7 and which has not been tested at such port in accordance with the rules contained in Chapter IX, shall not be transported to any other port otherwise than to a port at which importation is permitted under sub-rule (1) of rule 7 and in accordance with the provisions of all the rules in Chapter II, except rule 5, when it arrives at such other port.

(2) Nothing in sub-rule (1) shall apply to petroleum of Burmese origin which is covered by a certificate in Form B granted by a testing officer appointed by the Government of Burma.

49. *Transport by sea of petroleum which has been tested.*—Petroleum which has been tested at one of the ports specified in sub-rule (1) of rule 7 and petroleum of Burmese origin which is covered by a certificate in Form B granted by a testing officer appointed by the Government of Burma, may be transported to any other port and the provisions of rules 8 to 14, 16 and 17 shall apply to such petroleum when it arrives at such other port.

50. *Transport over the Viramgam Custom Line.*—(1) Petroleum which has already been imported at Bombay or Karachi and has been tested there by the testing officer in accordance with these rules, or petroleum of Indian or Burmese origin which has been similarly tested at a refinery and has been despatched to Kathiawar by sea from any customs port may be transported over the Viramgam custom line, in accordance with the provisions of sub-rules (2), (3) and (4).

(2) If the consignment covered by a shipping bill from a customs port is brought as a whole, the shipping bill shall be presented with the consignment and the import application at the land customs station.

(3) If the consignment is brought in parts, the shipping bill shall accompany the first part of the consignment. Subsequent portions of the consignment shall be covered by a certificate from the customs officer of the port of landing in Kathiawar, declaring that "the petroleum forms part of the consignment covered by shipping bill No....., dated .....forwarded on the.....with the first portion of the consignment".

(4) No petroleum shall be transported over the custom line after the expiry of two months from the date of the shipping bill covering it.

(5) If the petroleum is in packages the marks, on the packages shall be fully described in the shipping bill.

(6) The Collector of Salt Revenue, Bombay, may waive the strict enforcement of sub-rules (2), (3) and (4) in case of emergency, if he is satisfied that the petroleum sought to be transported was originally despatched from a customs port to Kathiawar.

PART III.—COASTWISE TRANSPORT OF DANGEROUS PETROLEUM OTHERWISE THAN IN BULK.

51. *Application.*—(1) The rules in this Part apply only to the transport coastwise of dangerous petroleum otherwise than in bulk.

(2) Unless otherwise expressly provided in this Part nothing contained in Part II of this Chapter, except rule 39, shall apply to any petroleum transported in accordance with this Part.

52. *Maximum quantity allowed to be carried.*—Dangerous petroleum may be transported otherwise than in bulk by country craft or steam or motor vessels other than unberthed passenger ships as defined in the Indian Merchant Shipping Act, 1923, subject to the provisions of rules 53 to 62 inclusive, if the quantity of petroleum does not exceed:—

(*a*) in the case of country craft, the licensed carrying capacity of the vessel after taking into account the weight of the barrels or tins in which the petroleum is carried; or

(*b*) in the case of steam or motor-vessels, 15 tons.

53. *Loading of barrels and drums.*—Barrels and drums shall be loaded with the bungs upwards.

54. *Carriage below decks.*—Dangerous petroleum shall not be carried below decks in decked vessels unless the hold is properly ventilated.

55. *Provision of bulkhead.*—In all vessels other than country craft a solid gas-tight bulkhead without openings, and in country craft a solid bulkhead without openings, shall be fitted between the hold and the after-deck where the crew are accommodated; and in vessels fitted with a poop the bulkhead shall be placed immediately in front of the poop. In decked vessels the bulkhead shall reach up to the deck; in all other vessels it shall reach to within six inches of the gunwhale.

56. *Fire, lights and smoking.*—(1) No fire, naked light of any description, and no smoking, shall be allowed on any part of a vessel transporting dangerous petroleum except abaft the solid bulkhead.

(2) The navigation lights on any such vessel shall be carried abaft the bulkhead.

57. *Carriage of other inflammable cargo.*—No inflammable cargo other than dangerous petroleum or other petroleum products or the dunnage used for packing purposes shall be carried on a vessel transporting petroleum.

58. *Fire buckets.*—Buckets containing dry sand shall be placed at convenient points on a vessel transporting petroleum. Not less than two such buckets shall be placed on the after-deck.

59. *Construction of steam or motor-vessels.*—Steam or motor-vessels not specially constructed for the carriage of petroleum shall not carry petroleum unless they are constructed only of iron or steel.

60. *Transport in steam or motor-vessels.*—On steam or motor-vessels not specially constructed for the carriage of petroleum:—

(*a*) any petroleum shall either be carried in separate compartments which shall be gas-tight and shall be efficiently sealed, or in a hold in which there are efficient ventilators in accordance with clause (*b*), or on deck in accordance with rule 61;

(*b*) half of the ventilators provided in accordance with clause (*a*) shall extend to the bottom of the space, and the other half only a short distance, below the deck; the short ventilators shall be labelled "Outlet or to Leeward" and the long "Inlet or to Windward"; such ventilators shall have large cowl heads, the openings being covered with double fine brass wire gauze;

(*c*) dangerous petroleum shall be contained in receptacles complying with the provisions of rule 27; and

(*d*) special precautions shall be taken against smoking and the use of lights or fire of any kind while the cargo is being loaded or unloaded, or while the hatches are off, or any deck openings are uncovered; before any lights are used in a compartment which contains petroleum precautions shall be taken to ensure that the space is clear of vapour; all empty receptacles which have contained dangerous petroleum shall be kept securely closed.

61. *Transport on deck.*—Petroleum may be carried on deck in steam or motor-vessels not specially built for the carriage of petroleum, subject to the following conditions:—

(*a*) in cargo ships dangerous petroleum shall not occupy more than 50 per cent. of the open deck area and shall be so stowed as not to interfere with the navigation of the ship, or make it unseaworthy;

(*b*) in passenger ships a limited quantity of dangerous petroleum may be carried provided proper precautions are taken regarding stowage and keeping the packages away from passenger's promenade or deck space;

(*c*) the petroleum shall be protected from the direct rays of the sun by the use of a canvas awning or otherwise; and

(*d*) conspicuous notices shall be posted up drawing attention to the danger arising from smoking or striking matches near the deck cargo.

62. *Conditions of transport by country craft.*—No dangerous petroleum shall be transported in country craft except subject to the following conditions:—

(*a*) subject to the provisions of rule 27, the petroleum shall be carried—

(*i*) in 40/65 gallon steel barrels the screw bungs of such barrels being well-fitting and sealed; or

(*ii*) in 4 gallon sealed steel drums, not more than three tiers of which may be carried on any single vessel; or

(*iii*) in 2 gallon sealed steel tins, not more than six tiers of which may be carried on any single vessel;

(*b*) all barrels or tins shall be carefully examined and no leaky barrels or tins shall be taken on board the craft; and

(*c*) no barrels, drums or tins shall be placed within four feet of the after-deck where the crew are accommodated in the case of an undecked vessel or on deck in the case of a decked vessel.

PART IV.—TRANSPORT ON LAND BY VEHICLES.

63. *Prohibition of fires and smoking.*—(1) No fire or other artificial light capable of igniting inflammable vapour shall be allowed on any vehicle containing petroleum in bulk.

(2) No person shall smoke while on or attending such a vehicle.

(3) No article or substance capable of causing fire or explosion shall be carried on such a vehicle.

Explanation.—For the purposes of this rule any tank or other receptacle which has contained petroleum and which has not been thoroughly cleaned and freed from inflammable vapour shall be deemed to contain petroleum.

64. *Filling and discharge of tanks.*—(1) Tank-wagons, lorries or carts transporting petroleum shall only be filled or discharged by means of metal pipes or armoured hose in which the armouring is electrically continuous throughout.

(2) Tanks, other than fuel tanks on vehicles, containing dangerous petroleum shall not be filled or discharged—

(*i*) within 100 feet of any fire, furnace or artificial light capable of igniting inflammable vapour; or

(*ii*) at any place where the lorry, wagon or cart is exposed to sparks:

Provided that the distance specified in clause (*i*) may be reduced to 30 feet when the petroleum is filled or discharged under seal and closed vapour return pipe lines are provided:

Provided further that the distance specified in clause (i) may be reduced to the figure prescribed in the licence in Form K where the petroleum is filled, stored and discharged into a tank in any premises licensed in that Form.

Explanation.—A pipe supplying liquid to a tank is "under seal" to that tank if it is screwed to the tank or otherwise attached so that no liquid or vapour can escape into the air except through an approved vent.

65. *Means of extinguishing fire to be carried.*—An adequate supply of dry sand or other efficient means of extinguishing fire shall be carried in an easily accessible position on every vehicle transporting petroleum in bulk by road.

66. *Prohibition as to public service vehicles.*—Petroleum shall not be transported on any public vehicle which is carrying passengers.

67. *Vehicles to be constantly attended.*—(1) Every vehicle while engaged in the transport of petroleum by road shall be constantly attended by at least one person:

Provided that such vehicles may be left unattended in places previously approved by the Chief Inspector.

(2) Every vehicle on which more than 1,000 gallons of petroleum is being transported by road, or which, while transporting any petroleum by road is being trailed by another vehicle, shall so long as it is in motion, be attended by at least two persons.

68. *Trailers attached to vehicles transporting petroleum by road.*—(1) A trailer not exclusively used for transporting petroleum shall not be attached to any vehicle transporting petroleum.

(2) A trailer transporting petroleum shall not be attached to any vehicle other than a vehicle used for transporting petroleum, and not more than one trailer shall be so attached.

(3) A trailer shall have two axles.

(4) When a trailer is attached to a vehicle, the total quantity of petroleum transported on the trailer and the vehicle combined shall not exceed 2,000 gallons.

(5) If a trailer transporting dangerous petroleum is attached to a vehicle transporting non-dangerous petroleum, the vehicle shall comply with all the provisions of these rules relating to vehicles transporting dangerous petroleum.

(6) A trailer other than a tank trailer shall not be attached to a tank-wagon. The capacity of a tank trailer shall not exceed 500 gallons, and no trailer shall be attached to a tank-wagon of greater capacity than 1,500 gallons.

(7) No trailer attached to a tank-wagon shall be employed within any thickly populated area without the permission in writing of the District Authority.

69. *Tank capacity.*—In these rules the tank forming part of a tank-wagon or tank trailer shall be deemed to include any number of tanks on the same chassis and any limitation herein prescribed on the capacity of a tank shall be construed so as to permit of the tank containing the amount specified under varying degrees of temperature.

70. *Employment of electric light.*—If electric lighting is employed on any vehicle, including a trailer, used in the transport of petroleum other than heavy petroleum by road, the following conditions shall be complied with:—

(*i*) the pressure shall not exceed sixteen volts;

(*ii*) the circuit shall be heavily insulated and shall be independent of the chassis, and the wiring shall be so fixed and protected as to reduce as far as possible the risk of damage;

(*iii*) the generator, battery, switches and fuses shall be carried in front of the fire-resisting screen and the battery shall be in an easily accessible position; and

(*iv*) means of cutting off the current close to the battery by a double pole switch or other suitable method shall be provided.

71. *Fuelling from vehicles.*—(1) No motor conveyance other than aircraft shall fill or replenish its fuel tanks with petroleum other than heavy petroleum directly from vehicles carrying petroleum in bulk.

(2) Aircraft may receive fuel by means of specially constructed tank lorries or wagons only if these are of a type approved by the Chief Inspector for this purpose.

(3) During the fuelling of aircraft used for the conveyance of passengers no passengers shall be allowed to remain in the machine.

(4) No person shall be allowed to smoke within 100 feet of any aircraft while it is being, or is about to be, fuelled.

(5) All aircraft engines within the distance specified in sub-rule (4) shall be stopped so long as fuelling is in progress.

(6) Nothing in sub-rules (2) and (5) shall apply to military aircraft fuelling on military ærodromes.

72. *Owner responsible for observance of rules.*—The owner of a vehicle used for the transport of petroleum who employs any person in connection with such transport, shall be responsible that all necessary measures have been taken to ensure that such person is acquainted with and carries out the provisions of these rules.

73. *Precautions to be observed during filling or emptying tank-wagons.*—During the filling, discharging or emptying of any tank-wagon or trailer transporting petroleum in bulk other than heavy petroleum the following precautions shall be observed:—

(*i*) if the vehicle is mechanically-driven the engine shall be stopped so long as the filling, discharging or emptying is in progress and shall not be restarted until all tanks and valves have been securely closed:

Provided that this condition may be dispensed with in the case of vehicles approved under sub-rule (2) of rule 71, which are supplying aircraft;

(*ii*) adequate provision shall be made to prevent the accumulation of a dangerous static charge of electricity;

(*iii*) if the wagon is drawn by an animal or animals, they shall be removed from the wagon and the wheels securely scotched before the filling, discharging or emptying of any dangerous petroleum is begun; and

(*iv*) the vehicle shall be constantly attended by a competent person.

74. *Composite vehicles.*—Petroleum in cans or other receptacles shall not be transported by road on any tank-wagon used for the transport of petroleum unless the wagon is so constructed as to comply with the conditions applicable to transport on wagons other than tank-wagons as well as with the conditions applicable to transport on tank-wagons.

75. *Filling and dipping pipes to be kept closed.*—Except during the operations of filling or emptying a tank-wagon the filling and dipping pipes shall be kept securely closed. Where the filling pipes are not provided with a liquid seal, the covers shall be kept locked or properly sealed except during the operation of filling a tank-wagon, and the keys shall not be carried on the wagon.

76. *Filling and empting by night.*—Except where approved electric lighting as specified in rule 105 is exclusively used, the filling, discharging and emptying of tank-wagons shall be performed between the hours of sunrise and sunset.

77. *Approval of vehicles for transport in bulk necessary.*—(1) Petroleum in bulk shall not be transported by land except in a vehicle of a type approved in writing by the Chief Inspector.

(2) All such vehicles other than those exclusively used for the transport of heavy petroleum shall have a stamped, embossed, painted or printed warning exhibiting in conspicuous characters the words "Petrol", "Motor Spirit", "Kerosene" or an equivalent warning of the nature of the contents.

(3) Every such vehicle and its fittings shall be maintained in good condition.

78. *Vehicles for transport other than in bulk.*—(1) Every vehicle on which petroleum not in bulk is transported shall be strongly constructed and with sides and back of adequate height and shall be maintained in good condition.

(2) In the case of an animal-drawn vehicle the requirement in sub-rule (1) regarding the sides and back of the vehicle shall not apply if the load is securely fastened to the vehicle.

(3) All receptacles shall be so packed as not to project beyond the sides or back of the vehicle.

79. *Engines of mechanically-driven vehicles.*—(1) In every mechanically-driven vehicle used for the transport by road of petroleum other than non-dangerous petroleum not in bulk or heavy petroleum:—

(*a*) the engine shall be of an internal combustion type;

(*b*) the engine fuel tank and electric batteries shall be effectively screened from the body of the vehicle by a fire-resisting shield carried up above the height of the load and down to within twelve inches of the ground; and

(*c*) the exhaust shall be wholly in front of the fire-resisting shield.

(2) If windows are provided in the fire-resisting shield they shall be fitted with wired glass.

(3) The fuel tank of every such vehicle other than an articulated vehicle may be behind the fire-resisting shield if—

(*a*) a fuel feed apparatus, placed in front of the shield, is used to lift the contents from the fuel tank; and

(*b*) the fuel tank is protected from blows by the frame or by stout steel guards, and the filling hole cover is provided with a lock.

(4) The fuel tank of any vehicle may be behind the fire-resisting shield if the fuel used in the engine is heavy petroleum.

(5) A quick action cut-off valve shall be fitted to the fuel feed pipe of every such vehicle in an easily accessible position, which shall be clearly marked.

80. *Speed limit for vehicles.*—Without prejudice to the operation of any other provision of law for the time being in force whereby a lower limit of speed is imposed, the speed of a motor tank-wagon, or a motor lorry transporting petroleum in receptacles shall not exceed 30 miles per hour if fitted with pneumatic tyres and 15 miles per hour if fitted with solid tyres.

81. *Exemptions.*—(1) If the Chief Inspector is satisfied that in respect of any class of vehicle any of the requirements of rules 68, 78 and 79 may be safely suspended or relaxed, he may authorise such suspension or relaxation for such period and under such conditions as he may think fit.

(2) Nothing in rules 68, 70, 77, 78 and 79 shall apply to vehicles and trailers in the possession of His Majesty's forces.

82. *Special provisions for motor conveyances.*—(1) Rules 63 to 80 shall not apply to the conveyance of petroleum in any motor vehicle for use only in the propulsion of such vehicle.

(2) No motor conveyance carrying passengers on hire shall carry any petroleum other than:—

(*i*) petroleum in the fuel tank incorporated in the conveyance, and

(*ii*) petroleum not exceeding 20 gallons in quantity intended to be used to generate motive power for the conveyance and kept in the manner provided in sub-section (*2*) of section 8 of the Act.

(3) During the filling or replenishment of the fuel tank of a vehicle licensed for the conveyance of more than six passengers on hire, no passengers shall be allowed to remain in the vehicle.

(4) All petroleum tins carried in a vehicle carrying passengers for hire shall be securely closed and shall be carried in a specially prepared receptacle which is not accessible to passengers in the vehicle, and is not on the roof.

PART V.—TRANSPORT BY PIPE LINES.

83. *Application.*—The rules in this part apply only to the transport of petroleum by means of pipe lines other than those in any area in which operations for the winning of natural petroleum or natural gas or both are carried on or within the limits of refineries and installations.

84. *Casings.*—(1) An approved casing shall be put over the pipe line where it passes under any railway or public road and an approved protective casing shall be constructed round the pipe where it crosses over any railway or protected work:

Provided that the Chief Inspector may waive this rule in the case of any specified road or roads, if he is satisfied that the safety of the public is not likely to be endangered thereby.

(2) The Chief Inspector may require an extra casing to be put over the pipe line where it crosses any stream, road, railway or protected work.

85. *Patrol.*—The whole of every pipe line shall be efficiently patrolled.

86. *Prevention of excessive pressure.*—As a precaution against excessive pressure in the pipe line, an automatic bypass relief valve and a reliable pressure gauge shall be placed on the common discharge pipe at pumping stations.

87. *Telegraph and telephone.*—A telephone or telegraph line shall be provided with connections at frequent intervals along the pipe line. One telephone or telegraph line shall suffice for a series of parallel pipe lines:

Provided that this rule shall not apply to a pipe line connecting railway sidings with installations if the length of such pipe line does not exceed one mile.

88. *Gate valves.*—Gate valves shall be provided at reasonable intervals.

89. *Checking of tank gauges.*—Tank gauges shall be checked between stations at frequent intervals.

CHAPTER IV.

Storage of Petroleum Requiring Licence.

90. *Licence for storage.*—Save as provided in sections 7, 8 and 9 of the Act and by rule 109 no one shall store any petroleum except under a licence granted under these rules:

Provided that no licence shall be necessary for storage in a well-head tank.

91. *Precautions against fire.*—(1) No person shall smoke in any installation or storage shed.

(2) No person shall carry matches, fusees or other appliance for producing ignition or explosion in any installation or storage shed which is used for the storage of dangerous petroleum.

(3) No fire, furnace or other source of heat or light capable of igniting inflammable vapour shall be allowed in any licensed installation or storage shed save in places specially authorised by the licensing authority for the purpose.

(4) An adequate supply of dry sand or earth together with the necessary implements for its convenient application, or other efficient means of extinguishing petroleum fires, shall always be kept in every installation and in or adjacent to every storage shed.

92. *Supervision of operations within an installation or storage shed.*—All operations within an installation or storage shed shall be conducted under the supervision of an experienced responsible agent or supervisor.

93. *Cleanliness of installation or storage shed.*—The ground in the interior of an installation, and the protected area surrounding any storage shed or installation, shall be kept clean and free from all inflammable material, waste vegetation and rubbish.

Explanation.—In this rule "protected area" means the area necessary for the maintenance of the distances required under the conditions of the licence to be kept clear between any installation or storage shed and any protected work.

94. *Drainage.*—(1) All enclosures surrounding tanks or buildings belonging to an installation or storage shed shall be kept drained and no water shall be allowed to accumulate in the enclosure.

(2) Where drainage is effected by means of a pipe, the pipe shall be fitted with a valve actuated from the outside of the enclosure:

Provided that this sub-rule shall not apply to storage sheds which are not required under these rules or the terms of the licence to be provided with an enclosure wall or embankment.

(3) All valves and other openings for draining off water shall be kept closed except when water is being drained off.

(4) The nature of the drainage arrangements shall be shown in the plan submitted with the application for a licence.

95. *Exclusion of unauthorised persons.*—(1) Every installation shall be surrounded by a wall or fence of at least six feet in height:

Provided that nothing in this sub-rule shall apply to an installation licensed under the rules in force immediately before these rules come into operation unless its fencing is considered by the licensing authority to be unsatisfactory.

(2) Precautions shall be taken to prevent unauthorised persons from having access to any storage shed or installation.

96. *Children.*—No person under the age of 15 years shall be employed in or allowed to enter any premises licensed under these rules.

97. *Receptacles for petroleum.*—The provisions of rules 26, 27 and 28 shall apply to petroleum stored under licence.

98. *Petroleum only to be stored.*—No installation or storage shed shall without permission in writing from the Chief Inspector be used for any purpose other than the storage and distribution of petroleum and purposes directly connected therewith.

99. *Marking of capacity of tanks.*—The capacity in gallons of every tank in an installation shall be conspicuously marked on the tank.

100. *Construction of tanks.*—(1) Every tank or other receptacle used for the storage of petroleum in bulk other than a well-head tank shall be constructed of iron or steel properly erected and designed according to sound engineering practice; and, together with all pipes and fittings, shall be so constructed and maintained as to prevent any leakage of petroleum.

(2) The height of a storage tank shall not exceed its diameter:

Provided that, in the case of tanks of less than 30,000 gallons capacity, the height may extend to one and half times the diameter.

(3) No tank shall be more than 50 feet in height.

101. *Testing of tanks.*—(1) Storage tanks or other receptacles for the storage of petroleum in bulk other than well-head tanks, after being placed in a final position and before being brought into use, shall, unless they were in use before the 1st April 1937, be tested by water pressure by the licensee in the presence of an Engineer accepted as qualified for the purpose by the licensing authority.

(2) The water used for testing shall be free from petroleum and shall not be passed through any pipes or pumps ordinarily used for the conveyance of petroleum:

Provided that, where the licensing authority is satisfied that it is not reasonably possible to convey water by pipes or pumps other than those ordinarily used for the conveyance of petroleum, he may permit the use of a petroleum-pipe or pump for the conveyance of water subject to such conditions as he may impose.

(3) The test referred to in sub-rule (1) shall also be made before any receptacles for the storage of petroleum in bulk are brought into use after being repaired.

102. *Earthing of tanks.*—All tanks or other receptacles for the storage of petroleum in bulk, other than well-head tanks or tanks or receptacles of less than 10,000 gallons capacity containing heavy petroleum, shall be electrically connected with the earth in an efficient manner by means of not less than two separate and distinct connections placed at opposite extremities of such tank or receptacle. The roof and all metal connections of such tank or receptacle shall be in efficient electrical contact with the body of such tank or receptacle.

103. *Inspection of earth connections.*—(1) The connections and contacts required by rule 102 shall be inspected and tested at least once in every year by the licensee of the tank or receptacle in the manner prescribed by the Chief Inspector.

(2) A record of such inspections and tests shall be maintained by such licensee, and shall be produced on demand by any Inspector.

104. *Night working.*—No installation or storage shed shall be open, and no work in any installation or storage shed shall be permitted, between sunset and sunrise except where approved electric lighting as specified in rule 105 is exclusively used.

105. *Electric apparatus.*—(1) All electric wires installed at less than 15 feet from the ground in any petroleum installation or situated within 20 feet of any building or tank containing dangerous petroleum shall consist of insulated cables, enclosed in metallic coverings which shall be gas-tight, electrically and mechanically continuous throughout, and effectively earthed outside the building.

(2) No electric wire shall pass over any petroleum tank, filling, painting or storage shed.

(3) In filling, painting and storage sheds and pump rooms used for—

(*i*) dangerous petroleum—

(*a*) all electric meters, distribution boards, switches, fuses, plugs and sockets shall be placed outside the building and shall be of flame-proof construction satisfying the requirements of the British Standard Specification No. 229, and the frames shall be effectively earthed;

(*b*) all electric fixed lamps shall be enclosed in a well glass flame-proof fitting, either doubly enclosed with an inner and an outer well glass or singly enclosed with substantial metal protection; such lamps shall be installed at 12 feet where possible, but in no case less than 8 feet, above the floor level;

(*c*) all electric portable hand lamps of the self-contained pattern shall be of a type approved by the Chief Inspector;

(*d*) for the examination of cans and other containers, electric torches employing a separate battery may be used; these torches shall be fitted with substantially protected flame-proof globes and shall be supplied through a cable of cab-tyre or other suitable sheathing and properly constructed flame-proof connectors; and

(*e*) no single fixed lamp shall exceed 150 watts.

(*ii*) non-dangerous petroleum:—

(*a*) all electric metres, distribution boards, switches, fuses, plugs and sockets shall be enclosed in iron-clad, gas-tight cases and shall be fixed at least 5 feet above the floor level in well-ventilated positions close to the door;

(*b*) all electric fixed lamps shall be enclosed in a gas-tight well glass fitting provided with substantial metal protection;

(*c*) all electric portable hand lamps shall be fitted with substantially protected gas-tight globes and supplied through a flexible cab-tyre or other suitable sheathing and properly constructed gas-tight connectors; and

(*d*) no single fixed lamp shall exceed 200 watts and no hand lamp shall exceed 30 watts.

106. *Pumping.*—No internal combustion engine or electric motor shall be used for driving pumps for pumping petroleum save in a pump house specially constructed for the purpose and under such conditions as may be approved by the Chief Inspector:

Provided that this rule shall not apply where the motor control switchgear and starting apparatus are of flame-proof construction satisfying the requirements of the British Standard Specification No. 229.

107. *Posting up of rules and conditions.*—Copies of the preceding rules in this Chapter and of the conditions of the licence shall be exhibited in a conspicuous place in every licensed installation and storage shed.

108. *Petroleum in possession of His Majesty's forces.*—Nothing in rules 90, 95, 98, 101 and 104 shall apply to petroleum in the possession of His Majesty's forces.

CHAPTER V.

Storage of Petroleum not Requiring Licence.

109. *Exemption of heavy petroleum.*—(1) Notwithstanding anything contained in these rules, it shall be permissible to store without licence, subject to the conditions of this Chapter, heavy petroleum in quantities not exceeding 10,000 gallons, which is not stored in the same installation or storage shed as other petroleum.

(2) The provisions of Chapter IV shall not apply to petroleum so permitted to be stored without licence under sub-rule (1).

110. *Storage of exempted heavy petroleum in bulk.*—(1) Heavy petroleum in bulk, if stored otherwise than under a licence, shall be stored in a tank constructed of iron or steel properly erected and designed and the tank with all pipes and fittings shall be so constructed and maintained as to prevent any leakage of petroleum.

(2) All tanks of a capacity exceeding 1,000 gallons shall be surrounded by a bank or wall, or sunk in a pit, so constructed and maintained as to be able to contain without leakage the whole of the petroleum liable to be present at any one time in the tank.

(3) A distance of not less than ten feet shall be kept clear between protected works and the enclosure walls or banks.

(4) Nothing in this rule shall apply to petroleum in the possession of His Majesty's forces.

111. *Storage of exempted heavy petroleum not in bulk.*—Heavy petroleum which is not in bulk, if stored otherwise than under a licence, shall, if the quantity exceeds 500 gallons, be stored in a storage shed of which either—

(*a*) the doorways and other openings shall be built up to a height of one foot above the level of the floor; or

(*b*) the floor shall be sunk to a depth of one foot.

112. *Prior report of storage of exempted heavy petroleum.*—Every person intending to store heavy petroleum in quantity exceeding 1,000 gallons otherwise than under a licence shall send to the Chief Inspector a prior report stating the situation of the premises on which such petroleum is to be stored.

113. *Garages and hangars.*—(1) Every garage or hangar used for housing any motor conveyance containing dangerous petroleum in bulk in any tank incorporated in the conveyance, whether such petroleum is intended to be used to generate motive power for the conveyance or not, shall be constructed of uninflammable material and be effectively and safely ventilated to the open air.

(2) Every such garage or hangar shall be in charge of a competent person who shall be responsible for taking all proper precautions against fire and shall prevent unauthorised persons from having access to the building.

CHAPTER VI.

Licences.

114. *Application for licence.*—(1) A person wishing to obtain or to renew a licence prescribed under these rules shall submit an application in writing to the authority empowered to grant such a licence.

(2) Every application for the grant or renewal of a licence to store or to import and store petroleum shall be in Form D.

115. *Grant of licence.*—(1) Licences for importation and storage may be granted by the licensing authorities set forth in Schedule I in the forms, for the purposes, and on payment of the fees, specified therein.

(2) A licence in Form H may be granted for such period as the licensing authority may deem necessary subject to a maximum of twelve months. Every other licence granted or renewed under these rules shall remain in force until the 31st day of December of the year for which the licence is granted or renewed.

(3) Where the licensing authority is the Chief Inspector, an applicant for a new licence may apply to the District Authority for a certificate to the effect that there is no objection to the applicant receiving a licence for the site proposed and the District Authority shall, if he sees no objection, grant such certificate to the applicant who may forward it to the Chief Inspector with his application in Form D.

(4) The Chief Inspector may refer an application not accompanied by a certificate granted under sub-rule (3), to the District Authority for his observations.

(5) If the District Authority, either on a reference being made to him or otherwise, intimates to the Chief Inspector that any licence which has been applied for, should not in his opinion be granted, such licence shall not be issued without the sanction of the Governor General in Council.

(6) No licence in Form H shall be granted except to a person holding a licence in Form I.

(7) In the case of a licence granted for storage one copy of the plan or plans of the storage premises signed in token of approval by the licensing authority shall be attached to the licence and one copy shall be filed for record in the office of the licensing authority.

116. *Particulars of licence.*—Every licence granted under these rules shall be held subject to the conditions endorsed on it and shall contain all the particulars which are contained in the form prescribed for it by these rules.

117. *Power of licensing authority to alter conditions.*—(1) Notwithstanding anything contained in rule 116 the licensing authority, at the time of issuing a licence, may omit, alter or add to any of the conditions specified in the prescribed form of licence.

(2) The power conferred by sub-rule (1) shall not be exercised by the District Authority without the prior concurrence of the Chief Inspector.

118. *Amendment of licence.*—(1) Any licence granted under these rules may be amended by the authority granting such a licence:

Provided that the amendments shall not be inconsistent with any rule in this Chapter.

(2) A licensee who desires to have his licence amended shall submit it to the licensing authority with an application stating the nature of the amendment and the reasons therefor.

(3) The fee for the amendment of a licence shall be one rupee *plus* the amount (if any) by which the fee that would have been payable if the licence had originally been issued in the amended form exceeds the fee originally paid for the licence.

119. *Renewal of licence.*—(1) A licence may be renewed by the authority empowered to grant such a licence.

(2) Every application for the renewal of a licence shall be made not less than thirty days before the date on which the licence expires, and, if the application is so made, the premises shall be held to be duly licensed until such date as the licensing authority renews the licence or until an intimation that the renewal of the licence is refused has been communicated to the applicant.

(3) The same fee shall be charged for the renewal of a licence as for a licence.

120. *Refusal of licence.*—(1) A licensing authority refusing to grant, amend or renew a licence, shall record his reasons for such refusal in writing.

(2) A copy of the order containing the reasons for such refusal shall be given to the applicant on payment of a fee of one rupee.

121. *Cancellation of licence.*—(1) Every licence granted under these rules shall be liable to be cancelled by order of the licensing authority for any contravention of the Act or of any rule thereunder, or of any condition contained in such licence.

(2) A licensing authority cancelling a licence shall record his reasons for so doing in writing.

(3) A copy of the order containing the reasons for the cancellation of a licence shall be given to the holder of the licence on payment of a fee of one rupee.

122. *Appeals.*—(1) Any person may appeal to the Governor General in Council from an order of the Chief Inspector refusing to grant, amend or renew a licence or cancelling a licence.

(2) Any person may appeal to the immediate official superior of the District Authority from an order of the District Authority refusing to grant, amend or renew a licence or cancelling a licence.

(3) Every appeal shall be in writing and shall be accompanied by a copy of the order against which the appeal is made.

(4) The appeal shall be presented within 30 days when the order appealed against has been passed by the District Authority and within 60 days when the order has been passed by the Chief Inspector.

123. *Supply of rules.*—With every licence granted for the storage of petroleum, a copy of rules 90 to 107 in Chapter IV, shall be given free of charge to the licensee.

124. *Certificates of safety.*—(1) Before petroleum is stored in any installation for which a licence is being granted for the first time, a certificate shall be furnished to the licensing authority to the effect that all enclosure walls and embankments constructed in accordance with the conditions of the licence are of such a nature as to ensure safety.

(2) The certificate shall be signed by an Engineer accepted as qualified for the purpose by the licensing authority.

(3) When the licence is not granted for the first time, but is being granted for an increased quantity of petroleum, a certificate shall similarly be furnished to the licensing authority before any quantity of petroleum exceeding the amount which was admissible under the former licence is stored in the installation.

125. *Transfer of licence for storage.*—(1) The holder of a licence for the storage of petroleum may, at any time before the expiry of the licence, apply for permission to transfer his licence to another person.

(2) Such application shall be made to the licensing authority who shall, if he approves of the transfer, enter upon the licence, under his signature, an endorsement to the effect that the licence has been transferred to the person named.

(3) A fee of one rupee shall be charged on each such application.

(4) The person to whom the licence is so transferred shall enjoy the same powers and be subject to the same obligations under the licence as the original holder.

126. *Procedure on death or disability of licensee.*—(1) If a licensee dies or becomes insolvent or mentally incapable or otherwise disabled, the person carrying on the business of such licensee shall not be liable to any penalty or confiscation under the Act or these rules for exercising the powers granted to the licensee by the licence during such time as may reasonably be required to allow him to make an application for a new licence in his own name for the unexpired portion of the original licence.

(2) A fee of one rupee shall be charged for a new licence for the unexpired portion of an original licence granted to any person applying for it under this rule.

127. *Loss of licence.*—Where a licence granted under these rules is lost or accidentally destroyed, a duplicate may be granted on payment of a fee of one rupee.

128. *Payment of fees.*—(1) Every application for the grant or renewal of a licence shall be accompanied by the fee payable thereon. If the licence is not granted or renewed, the fee shall be refunded.

(2) All fees chargeable under these rules in respect of licences granted by the District Authority shall be paid by means of impressed stamps or in cash.

(3) The payment of all other fees under these rules shall be made in cash or by cheque.

129. *Power to exempt from payment of fees.*—The Governor General in Council may, by general or special order, grant exemption from, or reduction of, any fee payable under these rules.

130. *Production of licence on demand.*—(1) Every person holding or acting under a licence granted under these rules shall produce it, or an authenticated copy of it, at the place to which the licence applies, when called upon to do so by any Inspector.

(2) Copies of any licence may, for the purposes of this rule, be authenticated free of charge by the authority which granted the licence.

131. *Procedure on reports of infringements.*—The District Authority shall inform the Chief Inspector of the action taken by him on any reports of infringements of the Act or of these rules which the Chief Inspector may make to him.

CHAPTER VII.

Refining and Blending of Petroleum.

132. *Approval of refinery.*—(1) No person shall refine or blend petroleum unless the plans showing the general arrangement of tanks, stills, fencing, gates, and all plant and buildings at the place where it is proposed to refine or blend petroleum (hereinafter in this Chapter referred to as the refinery) have been approved by the Chief Inspector.

(2) The Chief Inspector on receiving an application under sub-rule (1) may require the submission of such particulars as he may specify regarding the materials used or to be used in the construction of stills, condensing pipes and tanks, and the method of their erection,

133. *Retention of plans.*—A copy of the approved plans, which shall incorporate any alterations sanctioned under rule 135 from time to time shall be kept at the refinery.

134. *Application of rules.*—Rules 135 to 147 inclusive apply only to refineries.

135. *Alterations.*—No alteration in a refinery involving the general arrangement of tanks, stills, any other plant and buildings or the materials used in the construction or the method of erection of the stills, condensing pipes and tanks shall be carried out without the previous sanction in writing of the Chief Inspector.

136. *Use of fire-proof materials.*—All buildings in which petroleum is handled shall be built of fire-proof materials.

137. *Situation of storage tanks.*—No storage tank, the capacity of which exceeds 50,000 gallons, shall be situated nearer than 300 feet to any still, boiler or furnace.

138. *Size of service tanks.*—Unless specially permitted by the Chief Inspector service tanks (*i.e.*, tanks which contain fuel for boiler and still fires) shall not be larger than is necessary to conserve 24 hours fuel for the fire which they serve.

139. *Drainage.*—Suitable arrangements shall be made for the proper carrying off and fire-trapping of all drainage and possible leakage from a still or bench of stills.

140. *Fires and smoking.*—(1) No fire, furnace or source of heat or light capable of igniting inflammable vapour shall be allowed except in the firing spaces of stills or boilers.

(2) No smoking shall be allowed except in spaces or buildings specially approved for the purpose by the Chief Inspector.

141. *Supply of sand or earth.*—(1) An adequate quantity of dry sand or earth together with the necessary implements for its convenient application or other efficient means of extinguishing petroleum fires shall always be kept readily accessible near tanks and stills.

(2) The Chief Inspector may specify the quantity of dry sand or earth which shall be deemed to be adequate for the purposes of this rule.

142. *Hydrants and hoses.*—(1) In a refinery with a still capacity exceeding on an average 1,000 gallons daily, hydrants with a minimum pressure of 40 lbs. with the necessary hose, shall be provided at suitable points. Their location shall be shown in the approved plans of the refinery.

(2) All hydrants and hose shall be kept in an efficient condition.

143. *Pumping of dangerous petroleum.*—All dangerous petroleum as it leaves the stills, with the exception of such quantities as may be pumped direct to service tanks for fuel, shall be at once pumped out of the refinery to storage tanks, and shall not be stored in the immediate neighbourhood of stills and boilers:

Provided that the Chief Inspector may permit dangerous petroleum to be disposed of otherwise.

144. *Prevention of danger from electricity.*—Adequate provision shall be made to prevent the accumulation of dangerous static charges of electricity.

145. *Plans.*—Fire walls and efficient separators for drainage shall be shown, in the plans referred to in rule 132 and may be required to be erected when deemed necessary by the Chief Inspector.

146. *Reports of fires.*—The occurrence of any fire at a refinery shall be reported immediately by the person in charge of the refinery for the time being to the nearest Police Station and to the Chief Inspector.

147. *Closing of refinery.*—If a refinery is closed down, the area within the fence surrounding it shall be cleared of all petroleum having a flashing-point below 200°F. as soon as possible.

CHAPTER VIII.

Tetra Ethyl Lead Mixtures.

148. *Addition of tetra ethyl lead.*—Tetra ethyl lead shall not be added to petroleum in such quantity as to render the proportion of tetra ethyl lead to petroleum in excess of one part in 1,000 parts by volume or one part in 450 parts by weight.

149. *Importation, transport and storage.*—No person shall import, transport or store any petroleum containing tetra ethyl lead in which the proportion of tetra ethyl lead exceeds one part in 1,000 parts by volume or one part in 450 parts by weight.

150. *Power to increase proportion.*—The Chief Inspector may by an order in writing in special cases permit the proportions of tetra ethyl lead prescribed in rules 148 and 149 to be increased.

151. *Coloration.*—Every mixture of petroleum and tetra ethyl lead shall be distinctively coloured before being sold to the public.

152. *Marking of receptacles.*—All receptacles containing a mixture of petroleum and tetra ethyl lead shall unless they are in the possession of His Majesty's forces bear a warning in the following terms—

"*Warning.*

This spirit contains lead and should be used as a motor fuel only."

CHAPTER IX.

Testing of Petroleum.

153. *Drawing of samples.*—(1) In all cases the sampling officer shall personally superintend the drawing of the sample. Where the sample is drawn from an original unopened receptacle containing petroleum not in bulk the opening shall be sufficient to admit of the sample being rapidly transferred from the receptacle.

(2) Two bottles, each of the capacity of about 40-fluid ounces, shall be filled to three-quarters of their capacity with the sample and corked. The corks shall be driven home and cut off level with the neck; and melted sealing wax shall be worked into the corks and the bottles shall be efficiently sealed.

(3) In the case of petroleum imported by sea the bottles containing the sample shall, after being sealed, be labelled with the name of the ship, the name of the consignee, and such other distinguishing marks as may be necessary.

154. *Forwarding and retention of samples.*—One of the bottles referred to in sub-rule (2) of rule 153 shall be preserved for reference in case of need and the other shall be forwarded to the testing officer.

155. *Procedure for delivery of samples from ship's cargo.*—(1) When the master of, or the agent for, a ship has made the declaration required by rule 8, the sampling officer shall go on board the vessel and obtain samples of all the petroleum on board which it is intended to land at the port. If the importer so desires the sampling officer shall also take samples of all the petroleum on board which it is intended to land at any other port in British India:

Provided that no sample need be taken of—

(*a*) petroleum which is declared to be dangerous; or

(*b*) petroleum of Burmese origin which is covered by a certificate in Form B granted by a testing officer appointed by the Government of Burma.

(2) The master shall deliver to the sampling officer, without charge, samples of every variety of petroleum comprised in the petroleum of which samples are to be taken under sub-rule (1). Such samples shall, if the sampling officer so requires, be taken from the particular receptacles indicated by him:

Provided that when the petroleum is in cases, samples may be taken as landing proceeds.

156. *Selection of samples from ship's cargo.*—The minimum number of samples to be selected of each brand or quality contained in the cargo shall be as follows:—

(*a*) of petroleum certified in accordance with rule 11—

(*i*) in cases—one sample for every 15,000 cases or part thereof;

(*ii*) in casks or drums, declared to be of uniform quality—one sample for every 120,000 gallons or part thereof;

(*iii*) in bulk or in tanks—one sample from each group of tanks or tank compartments certified to be of the same brand or quality;

(*b*) of other petroleum—

(*i*) in cases—one sample for every 10,000 cases or part thereof;

(*ii*) in casks or drums, declared to be of uniform quality—one sample for every 80,000 gallons or part thereof;

(*iii*) in bulk or in tanks—one sample from each tank or tank compartment.

157. *Standard Test Apparatus.*—(1) The Standard Test Apparatus and thermometers shall—

(*a*) agree in every respect with the specifications laid down in Schedule III; and

(*b*) have been tested and certified by the Board of Trade or the National Physical Laboratory, London, and marked with the year of test.

(2) The standard thermometers shall be replaced at least once in every three years.

158. *Certification of apparatus.*—(1) When any apparatus for determining the flashing-point of petroleum is submitted to the officer appointed under sub-section (*1*) of section 15 of the Act for comparison with the Standard Test Apparatus, that officer shall examine the apparatus including the thermometers and the barometers or aneroids.

(2) No certificate shall be granted under section 16 of the Act if—

(*a*) the apparatus is in any respect outside the tolerances laid down in Schedule III to these rules or is otherwise defective; or

(*b*) any thermometer shows readings varying by more than 1°F. at temperatures of 76°F. and 120°F. as given by the Standard Test Apparatus; or

(*c*) any barometer or aneroid shows a variation of more than half an inch from the pressure given by the Standard Test Apparatus.

(3) A certificate in Form E shall be granted in respect of any apparatus which has been found to agree with the Standard Test Apparatus within the limits mentioned in sub-rule (2).

(4) A certificate granted under this rule shall be valid for a period of three years.

159. *Register of certificates.*—A register of all certificates granted under rule 158 shall be maintained in Form F by the officer appointed under sub-section (*1*) of section 15 of the Act.

160. *Methods of test.*—(1) The testing officer shall test the samples in the manner laid down in Schedule III to these rules.

(2) In all cases at least three samples shall be separately tested, the average of the three readings being corrected for the thermometer correction, if any, and for the barometric correction in case of dispute.

(3) If the average flashing-point is not lower than 76°F. and no one test gives a flashing-point below 73°F. the whole of the petroleum represented by the samples shall be deemed to be non-dangerous petroleum.

161. *Procedure when tests show want of uniformity.*—(1) If the testing officer, after testing samples taken from a ship's cargo, considers further tests necessary to satisfy himself that none of the petroleum is dangerous, he shall report to the Collector of Customs accordingly.

(2) On receipt of a report under sub-rule (1)—

(*a*) when the consignment is imported in cases or casks or drums, the Collector of Customs shall cause the petroleum in question to be landed and stacked in lots of not more than 1,500 cases or casks or drums each, or to be discharged into boats each containing not more than 1,500 cases or casks or drums, and the sampling officer shall select and deliver to the testing officer one sample from each lot;

(*b*) when the consignment is imported in bulk, the sampling officer shall forward a second sample and the Collector of Customs may, until the receipt of the testing officer's further report, prevent the landing of any portion of the contents of the tank in question, or may permit it to be landed as provided in rule 15;

(*c*) If the petroleum has been already landed and stored under rule 15—

(*i*) if it is not in bulk it shall be divided into lots and samples of each lot shall be selected as provided in clause (*a*);

(*ii*) if it is in bulk samples be shall drawn from each separate storage tank containing the petroleum.

162. *Certificate of tests.*—(1) The testing officer shall as soon as practicable, and ordinarily within twenty-four hours after receipt of any samples make out a certificate in Form G and shall forward it in the case of samples of petroleum taken on board a ship to the Collector of Customs and in the case of other samples to the officer submitting the sample.

(2) The testing officer shall, at the request of any person concerned, furnish him with a certified copy of the certificate in Form G on payment of a fee of one rupee.

163. *Fees for inspection and comparison.*—(1) The fee for each inspection of the Standard Test Apparatus shall be one rupee.

(2) The fees for comparing a privately owned test apparatus with the Standard Test Apparatus shall be as follows:—

	Rs.
Abel Flash Point Apparatus or Penaky-Martens Apparatus	30
Barometer	10
Thermometer ..	10

164. *Fees for testing.*—(1) The fee for testing each sample of imported petroleum shall be five rupees:

Provided that the aggregate fees chargeable under this sub-rule shall not, in the case of any one ship, exceed Rs. 50.

(2) The fee for re-testing each sample under section 20 of the Act shall be five rupees. It shall be refunded if the original test is proved to be erroneous.

SCHEDULE I.

LICENCES (*vide Rule 115*).

Article No.	Form of License (See Schedule II).	Purpose for which granted.	Authority empowered to grant license.	Fee.	
1	2	3	4	5	
1	H	To import dangerous petroleum other than petroleum which can be used in an internal combustion engine, in quantity not exceeding 60 gallons at any one time.	The District Authority.	Rs. 1.	
2	I	To store dangerous petroleum in quantity not exceeding 60 gallons.	The District Authority.	Rs. 4.	
				FOR ARTICLES 3, 4, 5, 6 AND 7.	
				Non-dangerous petroleum.	
3	J	To store non-dangerous petroleum, otherwise than in bulk, in quantity not exceeding 5,000 gallons.	The District Authority.	(*a*) When the quantity to be stored does not exceed five hundred gallons.	Rs. 8.
				(*b*) When the quantity to be stored exceeds five hundred but does not exceed one thousand gallons.	Rs. 12.
4	K	To store petroleum in a tank or tanks in connection with a pump outfit for fuelling motor conveyances.	The Chief Inspector.	(*c*) When the quantity to be stored exceeds one thousand but does not exceed five thousand gallons.	Rs. 12 for the first one thousand gallons *plus* Rs. 3 for every additional one thousand gallons or part thereof.
				(*d*) When the quantity to be stored exceeds five thousand but does not exceed fifty thousand gallons.	Rs. 24 for the first five thousand gallons *plus* Rs. 5 for every additional one thousand gallons or part thereof.
5	L	To import dangerous petroleum and to store petroleum in installations.	The Chief Inspector.	(*e*) When the quantity to be stored exceeds fifty thousand gallons.	Rs. 275.
6	M	To import and store dangerous petroleum otherwise than in bulk and to store otherwise than in bulk (*a*) non-dangerous petroleum in quantity exceeding 5,000 gallons or (*b*) partly dangerous petroleum and partly non-dangerous petroleum.	The Chief Inspector.		
				Dangerous petroleum.	
				(*f*) When the quantity to be stored or imported and stored does not exceed five hundred gallons.	Rs. 8.
7	Special forms.	To import dangerous petroleum and to store petroleum (in cases not provided for in Articles 1, 2, 3, 4, 5 and 6).	The Chief Inspector.	(*g*) When the quantity to be stored or imported and stored exceeds five hundred gallons.	The same fees as those laid down for storage of non-dangerous petroleum.

SCHEDULE II.

FORMS.

FORM A.

[*See Rule 8.*]

Declaration to be made by the master of a ship carrying petroleum before entering a port or by the ship's agent.

Name of ship.....

Nature of petroleum.	Total quantity carried in the ship.	Quantity of petroleum to be landed in British India at—Name of port.	Remarks.
Dangerous petroleum which can be used in an internal combustion engine.			
Other dangerous petroleum ..			
Petroleum certified in accordance with rule 11 other than heavy petroleum.			
Heavy petroleum ..			
Other non-dangerous petroleum ..			
Total ..			

Dated *Signature of Master/Agent of ship.*

FORM B.

[*See Rule 11.*]

Certificate of imported petroleum.

Certified that $\frac{\text{sample}}{\text{samples}}$ of petroleum of the description given below for shipment per S.S. to $\frac{\text{has}}{\text{have}}$ been tested by me and that $\frac{\text{its}}{\text{their}}$ flashing-$\frac{\text{point is}}{\text{points are}}$ as stated against the same.

Description of petroleum whether in cases, casks, drums, tanks or in bulk.	Brand.	No. of cases, casks, drums or tanks.	Quantity.	Flashing point.

Port of shipment.....Name of Shipper.....

Dated the *day of* *19* .

Signature and designation of Testing Officer.

FORM C.

[*See Rule 13.*]

Certificate of storage accommodation.

I hereby declare that I propose to store the following consignments of $\frac{\text{dangerous}}{\text{non-dangerous}}$ petroleum *ex* S.S..... arriving in.....on or about the.....19 at the storage tanks or sheds of which particulars are given in columns 1 and 2 of the statement below and I certify that the capacity shown as available in column 3 of that statement is available for the storage of the said petroleum, and that the said storage tanks and sheds are duly licensed for the storage of the petroleum in question.

Dated the.....19 .

Importer or Agent.

STATEMENT.

1 Storage tanks or sheds.	2 Total capacity of each storage tank or shed.	3 Capacity available in each storage tank or shed.	4 Capacity to be utilized by present consignment in each storage tank or shed.
	Gallons.	Gallons.	Gallon
Total (gallons) ..			

FORM D.

[*See Rule 114(2).*]

Application for the grant-renewal of a licence to store or to import and store petroleum.

	The replies to be written in this column.
*1. Applicant's Name	
" Calling	
" Address	
2. Situation of the premises where petroleum is to be stored—	
Province	
District	
Town or Village	
3. Petroleum proposed to be stored—	
Nature (*i.e.*, dangerous, non-dangerous or heavy petroleum) ..	
Quantity { In bulk ..	
Quantity { Not in bulk ..	
4. Form in which licence is required ..	
5. Do the premises fulfil all the conditions endorsed on the form ?	
6. Petroleum already stored on the premises—	
Nature	
Quantity { In bulk ..	
Quantity { Not in bulk ..	
7. Dangerous petroleum proposed to be imported—	
Quantity { In bulk ..	
Quantity { Not in bulk ..	
Remarks	

Signature of applicant.

Postal address of applicant.

Date of application.

Note.—This application if it relates to a new installation or storage shed or if the applicant proposes any alterations in an existing installation or storage shed, must be accompanied by specifications and plans drawn to scale in duplicate. The plans should clearly indicate :—

(*a*) the manner in which the conditions prescribed by these rules have been complied with ;

(*b*) the premises to be licensed, the area of which shall be distinctively coloured or otherwise defined ;

(*c*) the surroundings and all protected works ;

(*d*) the position and capacity of all storage tanks, storage and filling sheds and the position of all other buildings and erections forming part of the installation ;

(*e*) the areas reserved for dangerous petroleum, heavy petroleum and non-dangerous petroleum other than heavy petroleum ;

(*f*) tanks and other enclosures ;

(*g*) All pumps, valves, filling and discharge points, vent pipes, etc.

*In cases where the application is made on behalf of a company, the name and address of the company and the name of the manager or agents should be given.

FORM E.

[*See Rule 158 (3).*]

Certificate of Apparatus.

..... Apparatus.

Marked No.....

Maker's Name.....

Slide No.....

Thermometer No.....Oil Cup

No.....Water Bath

Cup No.....

The above apparatus including the thermometers having been submitted for verification with the Standard Test Apparatus was compared by me on.....and found to agree with it within the prescribed limits.

The following corrections are necessary to the thermometer and barometer or aneroid readings :—

Thermometer No.....

No. ....

Barometer or Aneroid No.....

Date .....

Reference.....

Signature and designation of the Officer appointed under Section 15 (1) of the Petroleum Act, 1934.

FORM F.

[*See Rule 159.*]

Register of Certificates of Apparatus.

Serial No.	Place at which the apparatus is intended to be used.	Number and date engraved on the apparatus.	Contents of certificate.	Date on which certificate will cease to be valid.

FORM G.

[*See Rule 162.*]

Certificate of tests of petroleum.

Owner .....

Marks .....

Test (1)

(2)

(3)

Average ..... Thermometer

correction .....

The sample is.....

petroleum and (in the case of non-dangerous petroleum) has a flashing-point of

.....

Place.....

Date .....

Testing Officer.

FORM H.

(Article 1 of Schedule I.)

Licence to import dangerous petroleum other than petroleum which can be used in an internal combustion engine, in quantity not exceeding 60 gallons at any one time.

No.

Fee Re. 1.

Licence is hereby granted to to import dangerous petroleum other than petroleum which can be used in an internal combustion engine, not exceeding sixty gallons in quantity at any one time, at the Port of subject to the provisions of the Petroleum Act, 1934, and the rules made thereunder and to the further conditions on the back of this licence.

This licence shall remain in force till the 19 .

The 19 .

District Authority.

Conditions of licence.

1. Dangerous petroleum shall be imported in gas-tight tinned, galvanised or otherwise externally rust-proofed sheet iron or steel receptacles which shall be fitted with well-made filling apertures and well-fitting screw plugs or with screw caps or other caps with metal air-tight under-caps.

2. The receptacles shall have the following thickness of metal:—

Capacity exclusive of the prescribed air-space	Not less than—
not exceeding 2 gallons	27 B.G.
exceeding 2 but not exceeding 4 gallons ...	22 B.G.
exceeding 4 but not exceeding 30 gallons ...	18 B.G.
exceeding 30 but not exceeding 45 gallons ...	17 B.G.
exceeding 45 gallons	16 B.G.

3. The receptacles shall be so constructed and secured as not to be liable except under circumstances of gross negligence or extraordinary accident, to become defective, leaky or insecure in transit and shall bear a stamped, embossed, painted or printed warning exhibiting in conspicuous characters the words "Highly Inflammable" or an equivalent warning of the dangerous nature of the petroleum.

4. An air-space of not less than 7½ per cent. of its capacity shall be left in each receptacle at the time of filling.

FORM I.

(Article 2 of Schedule I.)

Licence to store dangerous petroleum in quantity not exceeding 60 gallons.

No.

Fee Rs. 4.

Licence is hereby granted to valid only for the storage of gallons of dangerous petroleum in the storage shed described below, subject to the provisions of the Petroleum Act, 1934, and the rules made thereunder and to the further conditions on the back of this licence.

This licence shall remain in force till the 31st day of December 19 .

The 19 .

District Authority.

Description of the storage shed referred to above.

Date of renewal.	Date of expiry.	Signature of licensing authority.

This licence is liable to be cancelled if the licensed premises when inspected are not found conforming to the description and conditions attached hereto and contravention of any of the rules and conditions under which this licence is granted is also punishable with fine which may extend to five hundred rupees for a first offence and which may extend to two thousand rupees for any subsequent offence.

Conditions of licence.

1. Dangerous petroleum shall be stored only—

(*i*) in a storage shed constructed of suitable uninflammable material; the doors and windows may be of wood; or

(*ii*) in a properly ventilated iron bin of a design approved by the Chief Inspector, placed on private ground in the open air.

2. The storage shed shall be adequately ventilated near the ground level and also near or in the roof. The ventilators shall be provided with two thicknesses of fine copper or other non-corroding metal wire gauze of mesh not less than 28 to the linear inch.

3. The storage shed shall not form part of, or be attached to, any building in which any person resides or works or where persons assemble for any purpose unless it is separated therefrom by a substantial floor or partition which is constructed of uninflammable material and has no openings therein.

4. The storage shed, if in any building, shall not be situated under any staircase or under any other means of exit likely to be required to be used for escape in case of fire.

5. Any two storage sheds or bins or other storage premises not more than twenty feet apart, shall be deemed to be one storage shed.

6. No alterations shall be carried out in the storage shed or bin without the previous sanction in writing of the licensing authority.

7. If the licensing authority calls upon the holder of a licence, by a notice in writing, to execute any repairs to the storage shed, which are in the opinion of such authority, necessary for the safety of the shed, the holder of the licence shall execute the repairs within such period, not being less than one month from the date of receipt of the notice, as may be fixed by the notice.

8. Dangerous petroleum other than paints, varnishes, lacquers and similar products shall not be kept in any receptacle other than the standard petrol tins of capacity not exceeding two gallons exclusive of the prescribed air-space.

9. All empty receptacles which have contained dangerous petroleum shall, except when they are opened for the purpose of cleaning them and rendering them free from petroleum vapour, be kept securely closed unless they have been thoroughly cleaned and freed from petroleum vapour.

10. No receptacles shall be repaired on the premises and no person shall repair or cause to be repaired any receptacle in which, to his knowledge, any dangerous petroleum is or has been kept until he has taken all reasonable precautions to ensure that the receptacle has been rendered free from dangerous petroleum and any inflammable vapour.

11. Adequate precautions shall be taken at all times for the prevention of accident by fire or explosion.

12. Every care shall be taken to prevent any dangerous petroleum escaping into any drain, sewer, harbour, river or water course.

13. Adequate precautions shall be taken to prevent unauthorised persons having access to any dangerous petroleum kept and to the vessel which contains or has contained petroleum.

14. Any accident, fire, or explosion occurring within the licensed premises, which is attended with loss of human life or serious injury to person or property shall be reported to the nearest Magistrate or to the Officer-in-charge of the nearest Police Station immediately and by telegraph or telephone where such means of communication are available.

15. Free access to the licensed premises shall be given at all reasonable times to any Inspector or Sampling Officer and every facility shall be afforded to such officer for ascertaining that the rules and the conditions of this licence are duly observed.

FORM J.

(Article 3 of Schedule I.)

Licence to store non-dangerous petroleum, otherwise than in bulk, in quantity not exceeding 5,000 gallons.

No.

Fee Rs.

Licence is hereby granted to valid only for the storage of gallons of non-dangerous petroleum in the storage shed described below, subject to the provisions of the Petroleum Act, 1934, and the rules made thereunder and to the further conditions on the back of this licence.

This licence shall remain in force till the 31st day of December 19 .

The 19 .

District Authority.

(Description and location of the storage shed referred to above.)

Date of renewal.	Date of expiry.	Signature of licensing authority.

This licence is liable to be cancelled if the licensed premises when inspected are not found conforming to the description and conditions attached hereto and contravention of any of the rules and conditions under which this licence is granted is also punishable with fine which may extend to five hundred rupees for a first offence and which may extend to two thousand rupees for any subsequent offence.

Conditions of licence.

1. The petroleum shall be stored only in the storage shed which shall be constructed of suitable uninflammable material, but the beams, rafters, columns, windows and doors may be of wood. The building shall rest on foundation walls, the walls and floors being suitably finished to form a sump or enclosure not more than 2 feet in depth and capable of receiving and retaining, in cases of accident or emergency, a volume not less than the maximum quantity of petroleum allowed in the building.

2. The storage shed shall not form part of, or be attached to, any building in which any person resides or works or where persons assemble for any purpose unless it is separated therefrom by a substantial floor or partition which is constructed of uninflammable material and has no openings in it.

3. The storage shed, if in any building, shall not be situated under any staircase or under any other means of exit likely to be required to be used for escape in case of fire.

4. No alterations shall be carried out in the storage shed without the previous sanction in writing of the licensing authority.

5. If the licensing authority calls upon the holder of a licence, by a notice in writing, to execute any repairs to the storage shed, which may, in the opinion of such authority, be necessary for the safety of the shed, the holder of the licence shall execute the repairs within such period, not being less than one month from the date of receipt of the notice, as may be fixed by the notice.

6. Any two storage sheds not more than 15 feet apart shall be deemed to be one storage shed.

7. Non-dangerous petroleum shall be packed in air-tight tins or drums of steel or iron or in other receptacles not easily broken.

8. The drum or other receptacle containing petroleum shall only be opened in the licensed premises and for the time necessary for drawing off the petroleum, and during such drawing off every reasonable precaution shall be adopted for preventing the escape of petroleum or the vapour therefrom.

9. Adequate precautions shall be taken to prevent unauthorised persons having access to any petroleum kept and to any receptacles which contain or have contained petroleum.

10. Adequate precautions shall be taken at all times for the prevention of accident by fire or explosion.

11. Every care shall be taken to prevent any petroleum escaping into any drain, sewer, harbour, river or water course.

12. Any accident, fire or explosion occurring within the licensed premises, which is attended with loss of human life or serious injury to person or property, shall be reported to the nearest Magistrate or to the Officer-in-charge of the nearest Police Station immediately and by telegraph or telephone where such means of communication are available.

13. Free access to the licensed premises shall be given at all reasonable times to any Inspector or Sampling Officer and every facility shall be afforded to such officer for ascertaining that the rules and the conditions of this licence are duly observed.

FORM K.

(Article 4 of Schedule I)

Licence to store petroleum in a tank or tanks in connection with a pump outfit for fuelling motor conveyances.

No

Fee Rs .

Licence is hereby granted to valid only for the storage of gallons of petroleum in a tank (tanks) in the licensed premises described below and shown on the plan hereto attached subject to the provisions of the Petroleum Act, 1934, and the rules made thereunder and to the further conditions on the back of this licence.

*This licence shall be renewable for years in the absence of contravention of the provisions of the Petroleum Act, 1934, or of the rules framed thereunder or of any condition of this licence.

This licence shall remain in force till the 31st day of December

19 .

Chief Inspector of Explosives in India.

The 19 .

Plan No. , dated .

Description of the licensed premises referred to above.

The licensed premises are situated and consist of a gas-tight tank (tanks) of a capacity of gallons sunk underground.

Date of renewal.	Date of expiry.	Signature of licensing authority.

Conditions of licence.

1. The petroleum shall be stored in one or more gas-tight metal tanks of a capacity of gallons sunk completely underground in the position shown on the plan attached hereto and each placed in a masonry or concrete pit, the tank being packed round with sand, earth or clay so that no air-space is left between the tank and the masonry or concrete pit and the tank is not visible. Such masonry or concrete pit shall not be obligatory if the tank is a welded one tested up to a pressure of 3 lbs. per square inch and is buried and is on private, leased or rented land away from public traffic. The space over the buried tanks must not be used for any purpose.

*Not applicable to kerbside outfits.

2. There shall be no openings in any tank other than those necessary for the introduction or removal of the petroleum or for ventilating or dipping the tank. The filling and dipping pipes shall be carried down nearly to the bottom of the tank.

3. Every tank shall be fitted with a vent pipe leading into the open air. The vent pipe shall be securely supported and shall be not less than 12 feet in height. The upper opening shall be covered with fine copper or other non-corroding metal wire gauze of mesh not less than 28 to the linear inch and fitted with a hood or the upper opening shall be fitted with an inlet valve and an exhaust valve.

4. After the 1st April 1937, no pump or tank shall be erected inside a building and, if prior to that date any tank is installed inside a building, it shall only be filled from a tank-wagon through an underground filling pipe having a filling point in the open air at a distance of not less than 12 feet from the building.

5. No alteration of the position of a pump or tank and no replacement of a tank shall be effected except with the previous sanction in writing of the licensing authority. All alterations sanctioned under this condition shall be shown on an amended plan to be attached to this licence.

6. If the licensing authority calls upon the holder of a licence by a notice in writing to execute any repairs to the licensed premises which are, in the opinion of such authority, necessary for the safety of the premises, the holder of the licence shall execute the repairs within such period, not being less than one month from the date of receipt of the notice, as may be fixed by the notice.

7. Every tank, before being repaired, shall be cleared of all petroleum and of all inflammable vapours. When a tank in position is open for cleaning or repairs no electric or other lamps, electric cables or electric fans shall be brought near the manhole of the tank until the tank has been certified in writing to be 'gas free' by a qualified Chemist or Engineer. (The inside of the tank may be lighted by the use of mirrors.)

8. The petroleum shall enter a tank "under seal" and shall not be supplied to the tank between the hours of sunset and sunrise except by a motor tank-wagon of a type approved by the Chief Inspector for the purpose and with the approval in writing of the licensing authority.

NOTE.—A pipe supplying liquid to a tank is "under-seal" to that tank if it is screwed to the tank or otherwise attached so that no liquid or vapour can escape into the air except through the vent pipe fitted to the tank as required by condition 3.

9. No artificial light capable of igniting inflammable vapour shall at any time be present in the immediate vicinity of the tank-wagon during the transfer of the petroleum to the tank and no person engaged in such transfer shall smoke. When the underground tank is filled with petroleum from barrels no such light shall be allowed within a distance of 30 feet from the barrels.

10. No petroleum shall be removed from a tank except by means of the pump or pumps at the position marked on the plan hereto attached. Every pump shall together with its connections and fittings be so constructed and maintained as to be gas and petroleum-tight. The pipe connections between the tank and a pump shall be placed underground.

11. For the purpose of charging the tanks of motor vehicles the petroleum shall only be supplied by being—

(a) pumped through strong metal piping by means of approved pumps into above ground measuring tanks of a capacity not exceeding 30 gallons, fixed in approved positions, and run thence through sound hose, fitted with a secure self-closing cock and nozzle, into the tanks of motor vehicles, or

(b) pumped through strong metal piping by means of approved pumps into an above ground service tanks of approved capacity, fixed in an approved position, and run thence through strong metal piping into measuring tanks of a capacity not exceeding 30 gallons fixed in approved positions and thence through sound hose, fitted with a secure self-closing cock and nozzle, into the tanks of motor vehicles, or

(c) pumped by means of approved measuring pumps, fixed in approved positions, through sound hose fitted with a secure tap and nozzle, into the tanks of motor vehicles.

12. Petroleum may be supplied to a motor vehicle between the hours of sunset and sunrise from the pump provided that (i) lights other than the electric lights of the vehicle receiving the petroleum are extinguished, (ii) the pump and the vehicle are illuminated by electric light or failing this by some other form of lighting and (iii) no light capable of igniting inflammable vapour is situated or brought within twelve feet of the pump or vehicle receiving the petroleum.

13. Petroleum shall not be placed in any motor vehicle while the engine is running and persons in and engaged in connection with such motor vehicle shall not be permitted to smoke.

14. Except when absolutely necessary for the purposes of condition 7 or for testing the accuracy of the pump's discharge by means of a standard capacity measure, petroleum shall not be filled from the tank or pump into any receptacle other than one clamped or fitted to a motor vehicle.

15. This licence shall be held to cover the use of a portable kerb-side pump outfit for a period of not more than one month in the place of the licensed permanent outfit in the event of the latter being out of order, provided notice in writing is given to the licensing authority before the portable pump is taken into use, and the conditions of this licence which apply to a portable pump are observed. No petroleum shall be allowed above ground (except that actually in the pump) in any case where the underground tanks can be used in connection with the portable pump by making a temporary connection from the portable pump to the underground tank.

16. In cases where portable pumps are used not more than two barrels of petroleum in reserve shall be kept within 20 feet of the pump or on public property nearby.

17. Adequate precautions shall be taken to prevent unauthorised persons from having access to the petroleum or to the vessels which contain or have contained petroleum.

18. Every person managing or employed on or in connection with the licensed premises shall abstain from any act whatever which tends

to cause fire or explosion and which is not reasonably necessary and, to the best of his ability, shall prevent any other person from doing such act.

19. Every care shall be taken to prevent any petroleum escaping into any drain or sewer.

20. The licensee shall provide for each pump, whether kerbside or portable, a minimum of two tins or drums of dry sand which shall be kept ready for extinguishing fires.

21. Any accident, fire or explosion occurring within the licensed premises, which is attended with loss of human life or serious injury to person or property shall be reported to the nearest Magistrate or to the Officer-in-charge of the nearest Police Station immediately and by telegraph or telephone where such means of communication are available.

22. Free access to the licensed premises shall be given at all reasonable times to any Inspector or Sampling Officer and every facility shall be afforded to such officer for ascertaining that the rules and the conditions of this licence are duly observed.

FORM L.

(Article 5 of Schedule I.)

Licence to import dangerous petroleum and to store petroleum in installations.

No.

Fee Rs.

Licence is hereby granted to valid only for the importation of gallons of dangerous petroleum and for the storage of *gallons of petroleum in the place described below and shown on the plan attached hereto subject to the provisions of the Petroleum Act, 1934, and the rules made thereunder and to the further conditions on the back of this licence.

This licence shall remain in force till the 31st day of December 19 .

	Gallons.
*Dangerous petroleum in bulk	
Dangerous petroleum otherwise than in bulk ...	
Non-dangerous petroleum in bulk	
Non-dangerous petroleum otherwise than in bulk ...	
Total ...	

The 19 .

Chief Inspector of Explosives in India.

Plan No. , dated

Description of the place referred to above.

Date of renewal.	Date of expiry.	Signature of licensing authority.

This licence is liable to be cancelled if the licensed premises when inspected are not found conforming to the description and conditions attached hereto and contravention of any of the rules and conditions under which this licence is granted is also punishable with fine which may extend to five hundred rupees for a first offence and which may extend to two thousand rupees for any subsequent offence.

Conditions of licence.

1. Petroleum shall be kept only in the storage tanks and storage and filling sheds or other approved places within the installation specified for the purpose on the plan attached hereto.

2. (i) The tank or tanks shall be supported on an approved foundation and shall be surrounded by a wall or embankment of substantial construction, or shall be partially sunk in an excavation. The enclosure thus formed shall contain only one of the following classes of petroleum, shall be of dimensions sufficient to contain the quantity of petroleum specified under the class to be stored and shall be so constructed and maintained as to prevent the escape therefrom of any petroleum in the form of liquid, whether under the action of fire or otherwise—

(*a*) *Dangerous petroleum*—10 per cent. more petroleum than the tank or tanks are capable of containing;

(*b*) *Non-dangerous petroleum other than heavy petroleum*—the amount of petroleum the tank or tanks are capable of containing;

(*c*) *Heavy petroleum*—the amount of petroleum the largest tank in the enclosure is capable of containing:

Provided that heavy petroleum may be stored in the same enclosure as non-dangerous petroleum other than heavy petroleum if the dimension under (*b*) above is observed.

(ii) Except for the necessary pipes and valves the space within an enclosure and not occupied by the tank or tanks, shall be kept entirely clear and unoccupied. Alternatively gas-tight metal tanks may be sunk completely underground the tanks being packed round with sand, earth or clay, so that no air-space is left below ground level and the tank is not visible. Tanks so buried shall not be required to maintain the safety distances laid down in condition 8 but the space over the buried tanks must not be used for any purpose. The filling and dipping pipes in an underground tank shall be carried down to the bottom of the tank.

3. All tanks shall be fitted with a vent pipe leading into the open air, the open end being covered with fine copper or other non-corroding metal wire gauze of mesh not less than 28 to the linear inch, and fitted

with a hood or the tank shall be fitted with an approved relief valve or other approved means for preventing dangerous internal or external pressures being produced.

4. Cast iron valves are not permitted on any tank and all valves in an installation must be permanently marked in a manner clearly indicating the direction of opening and shutting the valve.

5. Pumps shall be placed only in the positions shown on the plan attached hereto and they shall together with all connections and fittings be so constructed and maintained as to prevent leakage of petroleum.

6. Storage or filling sheds shall be constructed of suitable uninflammable material. The building shall rest on foundation walls and shall be surrounded by a wall or embankment of substantial construction or the walls and floor shall be suitably finished to form a sump or enclosure not more than two feet deep. A combination of these methods is permissible. The enclosure or sump thus formed shall be of sufficient capacity to contain the total quantity of petroleum liable at any time to be present in the building and shall be so constructed and maintained as to prevent the escape therefrom of any petroleum in the form of liquid whether under the action of fire or otherwise. In the case of dangerous petroleum or partly dangerous and partly non-dangerous petroleum the enclosure or sump shall be capable of receiving and retaining a volume not less than 5 per cent. in excess of the maximum quantity allowed in the building. The sumps and enclosures must be kept clean and free from any accumulation of inflammable liquids.

7. Every storage or filling shed in which dangerous petroleum is stored or filled shall be adequately ventilated near the ground level immediately above any walls constructed to prevent any leakage of petroleum and also near or in the roof. The ventilators shall be provided with two thicknesses of fine copper or other non-corroding metal wire gauze of mesh not less than 28 to the linear inch.

8. (*a*) A distance of not less than 100 feet shall be kept clear between (*i*) a storage tank and any other storage tank (*ii*) between a storage tank and a storage or filling shed, the distance being measured between the nearest points of the perimeters of the storage tanks or storage or filling sheds, as the case may be.

(*b*) A distance of not less than 150 feet shall be kept clear between any storage tank or storage or filling shed and any protected work.

(*c*) Notwithstanding anything contained in clause (*a*) or clause (*b*)—

(*i*) Where the quantity of dangerous petroleum or partly dangerous and partly non-dangerous petroleum not in bulk to be stored in a storage shed does not exceed 50,000 gallons, the following reduced distances may be kept clear between the shed or enclosure wall and (A) any other building forming part of the installation, (B) any protected work or (C) any storage tank containing non-dangerous petroleum having a capacity not exceeding 50,000 gallons:—

	Feet.
Not exceeding 1,000 gallons	20
Exceeding 1,000 gallons but not exceeding 10,000 gallons ...	30
Exceeding 10,000 gallons but not exceeding 20,000 gallons ...	40
Exceeding 20,000 gallons but not exceeding 30,000 gallons ...	50
Exceeding 30,000 gallons but not exceeding 40,000 gallons ...	60
Exceeding 40,000 gallons but not exceeding 50,000 gallons ...	70

(*ii*) When a storage tank containing non-dangerous petroleum has a capacity not exceeding 1,00,000 gallons, a distance of not less than 50 feet may be kept clear between it and (A) another such tank of similar or less capacity or (B) a storage or filling shed containing non-dangerous petroleum.

Such a storage tank and storage or filling shed may, where the total quantity stored does not exceed 2,00,000 gallons, keep a distance of not less than 50 feet clear between the enclosure wall or embankment and any protected works.

(*iii*) When a storage tank containing non-dangerous petroleum has a capacity not exceeding 50,000 gallons, a distance of—

(*a*) for horizontal tanks, not less than one-third

(*b*) for perpendicular tanks, not less than one-half

the height of the tank may be kept clear between it and (A) another such tank or (B) a storage or filling shed wherein non-dangerous petroleum is stored in quantity not exceeding 50,000 gallons.

Such a storage tank and storage or filling shed may, where the total quantity stored does not exceed 1,00,000 gallons, keep a distance of not less than 20 feet clear between the enclosure wall or embankment and any protected works.

(*iv*) In the case of heavy petroleum a distance of not less than 20 feet may be kept clear between a storage tank and (A) another such tank or (B) a storage or filling shed containing such petroleum and a distance of not less than 50 feet shall be kept clear between such storage tank or filling or storage shed and any protected works. When the total quantity stored in such storage tank and storage or filling shed does not exceed 1,00,000 gallons, half the distances given in clause (*iii*) for the like quantity of non-dangerous petroleum other than heavy petroleum may be observed.

9. The distances specified in condition 8 may be reduced by the licensing authority in cases where screen walls are provided or other special precautions taken or where there are special circumstances that, in his opinion, warrant the alteration.

10. Notwithstanding anything herein to the contrary when petroleum is stored in an installation at or near wells, pumping stations or refineries, the concessions in clause (*c*) of condition 8 shall not apply and no storage tank, the capacity of which exceeds 50,000 gallons, or storage or filling shed shall be placed nearer than 300 feet to any still, boiler, furnace or fire. In such an installation all tanks shall be situated in a compact area (*a*) under a single control (*b*) enclosed or capable of being enclosed by one continuous fence (*c*) on which there shall be no protected works.

11. No alterations shall be carried out in the installation without the previous sanction in writing of the licensing authority. Such alterations so sanctioned shall be shown on an amended plan to be attached to this licence.

12. If the licensing authority calls upon the holder of a licence, by a notice in writing, to execute any repairs to the licensed premises, which are, in the opinion of such authority, necessary for the safety of the premises, the holder of the licence shall execute the repairs within such period, not being less than one month from the date of receipt of the notice, as may be fixed by the notice.

13. The responsible agent or supervisor referred to in rule 92 shall not allow any person to enter a tank, which has contained petroleum, unless—

(*a*) such person wears a safety helmet of a description approved by the Chief Inspector, or

(*b*) (*i*) the responsible agent or supervisor has certified in writing, as the result of an examination of the tank by himself or by some other competent person, that the atmosphere in the tank is fit for persons to enter, and

(*ii*) at least one safety helmet of a pattern approved by the Chief Inspector shall have been kept ready for instant use at the manhole of the tank which is being cleaned or repaired.

14. No work, involving the use of fire, welding or hot rivetting, shall be performed in or on any tank until the tank has been certified in the manner laid down in clause (*b*) of condition 13 to be free from petroleum vapour. When any water is pumped into or withdrawn from the tank no further work of the above description shall be done until the tank has been re-tested and a fresh certificate issued. When a tank is open for cleaning or repairs no lamps of any description either ordinary or electric, electric torches, electric cables or fans other than of a flame-proof type satisfying the requirements of the British Standard Specification No. 229 shall be brought near the tank.

15. No person shall repair or cause to be repaired any receptacle or pipe in which, to his knowledge, any petroleum is or has been kept until he has taken all reasonable precautions to ensure that the receptacle or pipe has been rendered free from petroleum and any inflammable vapour:

Provided that this condition shall not be deemed to prohibit the usual soldering operations connected with the filling and despatching of petroleum receptacles.

16. All empty receptacles which have contained dangerous petroleum shall, except when they are opened for the purpose of cleaning them and rendering them free from petroleum vapour, be kept securely closed unless they have been thoroughly cleaned and freed from petroleum and inflammable vapour.

17. Adequate precautions shall be taken at all times for the prevention of accident by fire or explosion.

18. Every care shall be taken to prevent any petroleum escaping into any drain, sewer, harbour, river or water course and enclosures or sumps must not be permanently connected with any drain or sewer.

19. Any accident, fire or explosion occurring within the area specified in the licence, which is attended with loss of human life or serious injury to person or property shall be reported to the nearest Magistrate or to the Officer-in-charge of the nearest Police Station immediately and by telegraph or telephone where such means of communication are available.

20. Free access to the licensed premises shall be given at all reasonable times to any Inspector or Sampling Officer and every facility shall be afforded to such officer for ascertaining that the rules and the conditions of this licence are duly observed.

FORM B.

(Article 6 of Schedule I.)

Licence to import and store dangerous petroleum otherwise than in bulk and to store otherwise than in bulk (a) non-dangerous petroleum in quantity exceeding 5,000 gallons or (b) partly dangerous petroleum and partly non-dangerous petroleum.

No.

Fee Rs.

Licence is hereby granted to valid only for the importation of gallons of dangerous petroleum and for the storage of gallons of dangerous petroleum and gallons of non-dangerous petroleum in the storage shed described below and shown on the plan attached hereto, subject to the provisions of the Petroleum Act, 1934, and the rules made thereunder and to the further conditions on the back of this licence.

This licence shall remain in force till the 31st day of December 19 .

The 19 .

Chief Inspector of Explosives in India.

Plan No. Dated

Description of the storage shed referred to above.

Date of renewal.	Date of expiry.	Signature of licensing authority.

This licence is liable to be cancelled if the licensed premises when inspected are not found conforming to the description and conditions attached hereto and contravention of any of the rules and conditions under which this licence is granted is also punishable with fine which may extend to five hundred rupees for a first offence and which may extend to two thousand rupees for any subsequent offence.

Conditions of licence.

1. The petroleum shall be stored only in the storage shed which shall be constructed of suitable uninflammable material provided that, when only non-dangerous petroleum is stored, the beams, rafters, columns, windows and doors may be of wood. The building shall rest on foundation walls and shall be surrounded by a wall or embankment of substantial construction or the walls and floor shall be suitably finished to form

a sump or enclosure not more than two feet deep. A combination of these methods is permissible. The enclosure or sump thus formed shall be of sufficient capacity to contain the total quantity of petroleum liable at any time to be present in the building and shall be so constructed and maintained as to prevent the escape therefrom of any petroleum in the form of liquid whether under the action of fire or otherwise. In the case of dangerous petroleum or partly dangerous and partly non-dangerous petroleum the enclosure or sump shall be capable of receiving and retaining a volume not less than 5 per cent. in excess of the maximum quantity allowed in the building. The sumps and enclosures must be kept clean and free from any accumulation of inflammable liquids.

2. The storage shed, if it is used for the storage of dangerous petroleum, shall be adequately ventilated near the ground level immediately above any walls constructed to prevent any leakage of petroleum and also near or in the roof. The ventilators shall be provided with two thicknesses of fine copper or other non-corroding metal wire gauze of mesh not less than 28 to the linear inch.

3. If the licensing authority calls upon the holder of a licence, by a notice in writing, to execute any repairs to the licensed premises which may, in the opinion of such authority, be necessary for the safety of the premises, the holder of the licence shall execute the repairs within such period, not being less than one month from the date of receipt of the notice, as may be fixed by the notice.

4. No alteration shall be carried out in the licensed premises without the previous sanction in writing of the licensing authority. All alterations shall be shown on an amended plan to be attached to this licence.

5. The following distances shall be kept clear at all times between protected works and a storage shed or an enclosure wall used for the storage of dangerous petroleum or partly dangerous and partly non-dangerous petroleum:—

Quantity to be stored	*Distances to be kept clear.*
	Feet.
not exceeding 500 gallons	20
exceeding 500 gallons but not exceeding 1,000 gallons ...	25
exceeding 1,000 gallons but not exceeding 5,000 gallons	30
exceeding 5,000 gallons but not exceeding 20,000 gallons	40
exceeding 20,000 gallons but not exceeding 30,000 gallons	50
exceeding 30,000 gallons but not exceeding 40,000 gallons	60
exceeding 40,000 gallons but not exceeding 50,000 gallons	70
exceeding 50,000 gallons	100

6. The following distances shall be kept clear at all times between protected works and a storage shed or an enclosure wall used for the storage of non-dangerous petroleum only:—

Quantity to be stored	*Distances to be kept clear.*
	Feet.
exceeding 5,000 gallons but not exceeding 10,000 gallons	15
exceeding 10,000 gallons but not exceeding 50,000 gallons	20
exceeding 50,000 gallons	30

7. The distances specified in conditions 5 and 6 may be reduced by the licensing authority in cases where screen walls are provided or other special precautions taken or where there are special circumstances that, in his opinion, warrant the reduction.

8. Drums or other receptacles containing petroleum shall only be opened in the licensed premises and for the time necessary for drawing off the petroleum, and during such drawing off every reasonable precaution shall be adopted for preventing the escape of petroleum or the vapour therefrom.

9. All empty receptacles which have contained dangerous petroleum shall, except when they are opened for the purpose of cleaning them and rendering them free from petroleum vapour, be kept securely closed unless they have been thoroughly cleaned and freed from petroleum and inflammable vapour.

10. No person shall repair or cause to be repaired any receptacle in which, to his knowledge, any petroleum is or has been kept until he has taken all reasonable precautions to ensure that the receptacle has been rendered free from petroleum and any inflammable vapour:

Provided that this condition shall not be deemed to prohibit the usual soldering operations connected with the filling and despatching of petroleum receptacles when such operations are conducted in an approved place outside the storage shed.

11. Adequate precautions shall be taken at all times for the prevention of accident by fire or explosion.

12. Every care shall be taken to prevent any petroleum escaping into any drain, sewer, harbour, river or water course.

13. Adequate precaution shall be taken to prevent unauthorised persons having access to any petroleum kept and to any receptacles which contain or have contained petroleum.

14. Any accident, fire or explosion occurring within the licensed premises, which is attended with loss of human life or serious injury to person or property shall be reported to the nearest Magistrate or to the Officer-in-Charge of the nearest Police Station immediately and by telegraph or telephone where such means of communication are available.

15. Free access to the licensed premises shall be given at all reasonable times to any Inspector or Sampling Officer and every facility shall be afforded to such officer for ascertaining that the rules and the conditions of this licence are duly observed.

SCHEDULE III.

METHODS OF TESTING PETROLEUM.

Determination of Flashing-Point.

[*See Rules 157 and 160.*]

I. APPARATUS TO BE USED.

The flashing-point of petroleum and petroleum mixtures which are fluid at 50°F. and which flash not above 120°F. shall be determined by the Abel apparatus as hereinafter defined.

The flashing-point of petroleum and petroleum mixtures which are solid at 50°F. and which flash not above 120°F. shall be determined by the Abel apparatus, the test being modified as hereinafter described.

The flashing-point of petroleum and petroleum mixtures which flash above 120°F. shall be determined by the Pensky-Martens apparatus as hereinafter defined.

II. PREPARING THE SAMPLES FOR TEST.

About ten fluid ounces of the sample, sufficient for three tests, should be transferred from the bottle into which the sample has been drawn to a pint, flask or bottle, which should be immersed in water artificially cooled until a thermometer, introduced into the sample, indicates a temperature not exceeding 50°F.

III. (1) ABEL APPARATUS.

The apparatus to be employed shall be the Abel petroleum testing apparatus modified by having an oil cup provided with a stirrer. It shall be constructed to the dimensions herein specified within the limits of accuracy prescribed by the tolerances set forth below.

Oil Cup.—The oil cup consists of a cylindrical vessel open at the top and fitted on the outside with a flat circular flange projecting at right angles.

Within the cup, fixed through the wall and silver soldered or brazed in place, there is a gauge consisting of a piece of wire bent upwards and terminating in a point.

Material.—Brass or gun-metal.

	Dimension.	Tolerance. in.
Cup, wall and bottom thickness	17 I.W.G.	..
Cup, internal diameter	2 in.	±0·05
Cup, internal depth	2·2 in.	±0·05
Flange, thickness	17 I.W.G.	..
Flange, width	0·5 in.	±0·05
Flange, distance of upper side from top edge of cup ..	0·375 in.	±0·05
Gauge, thickness, not less than	10 I.W.G.	..
Gauge, distance of point from level of upper edge of cup ..	0·7 in.	±0·005

Cover.—The cup is provided with a close-fitting cover with a downward projecting rim barely reaching the flange on the cup. The downward projecting rim is made solid with the top or silver soldered or

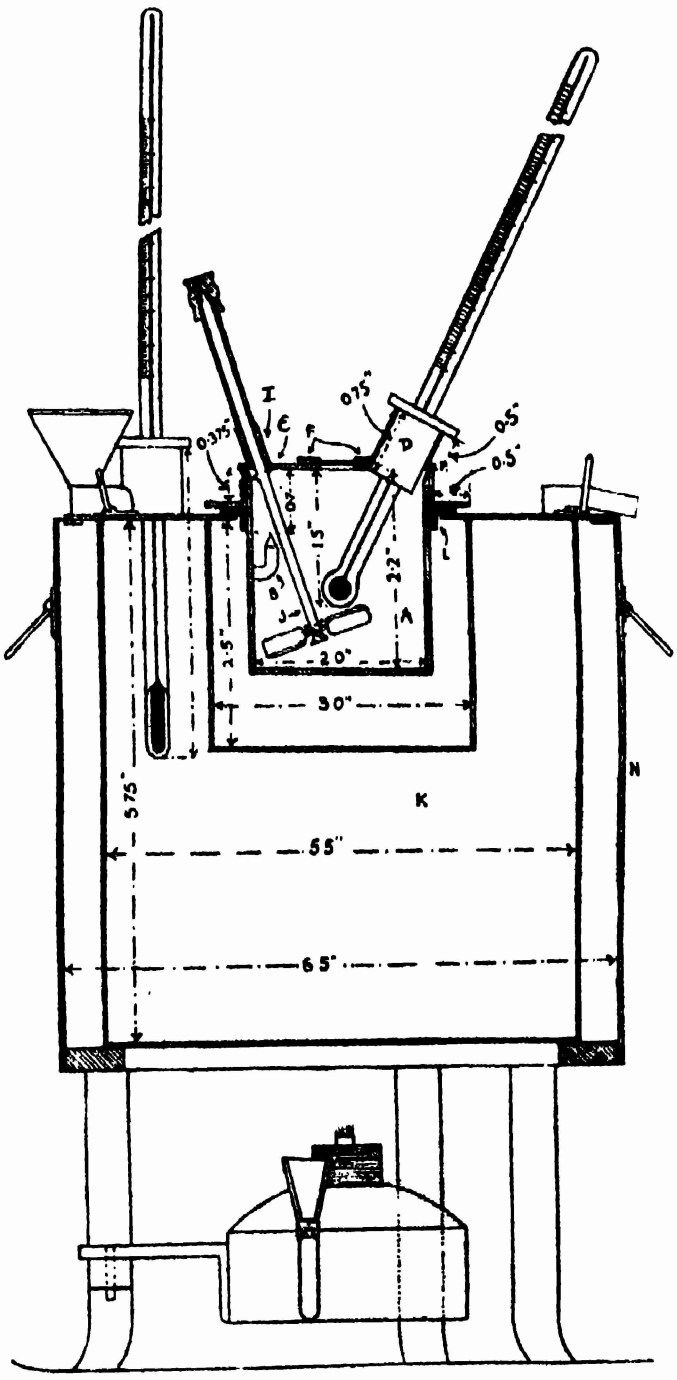

ABEL FLASH-POINT APPARATUS.

brazed in place. Upon the cover are mounted a thermometer socket, trunnions to support an oil test-lamp, a pair of guides in which a slide

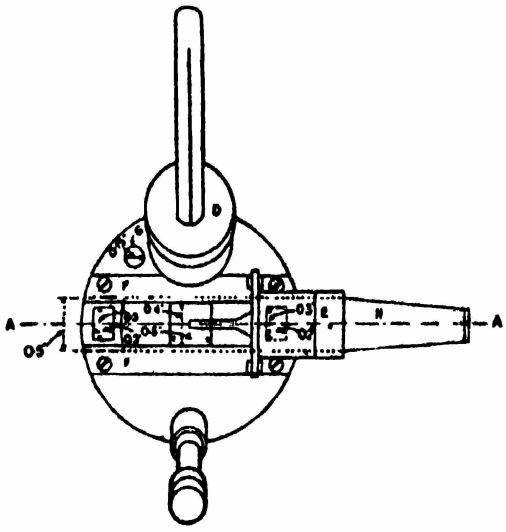

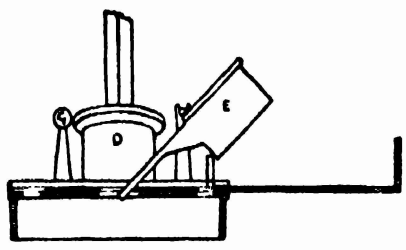

SECTION ON A.A.

COVER OF ABEL FLASH-POINT APPARATUS.

(SLIDE OPEN.)

moves, and a white bead. The top of the cover is pierced by three rectangular holes symmetrically placed on a diameter, one in the centre and the other two as close as practicable to the inner sides of the cover-rim and opposite each other. These three holes are covered or uncovered by means of a slide moving in suitably disposed guides. The slide has two perforations, one corresponding in all particulars to the centre hole in the cover and the other to one of the holes at the side. The movement of the slide is restricted by suitable stops, and its length and the disposition of the holes are such, that at the outer extremity of the movement of the slide, the holes in the cover are simultaneously just completely opened and at the inner extremity of the movement of the slide they are completely closed.

The trunnions supporting the test lamp are fixed on the top of the guides and the lamp is mounted in the trunnions so that it is free to oscillate. The lamp is provided with a jet to contain a wick and is so arranged that when the slide is moved so as to uncover the holes, the

oscillating lamp is caught by a pin fixed in the slide and tilted over the central hole in such a way that the lower edge of the cover bisects the circle formed by the bore of the jet when in the lowest position. The flame then occupies a central position within the hole in both directions.

A suitably mounted gas-jet may be substituted for the lamp

	Dimension	Tolerance
		in
Cover, thickness	0 05 in	±0 015
Cover, central hole, length (in direction of slide)	0·5 in	±0·005
Cover, central hole, width .	0·4 in.	±0·005
Cover, peripheral holes, length (in direction of side)	0·2 in. ..	±0·005
Cover, peripheral holes, width	0·3 in. ..	±0·005
Slide, thickness . ..	20 I.W.G. ..	..
Slide, width of upper surface ..	0·5 in ..	+0·01 (excess only)
Lamp, overall length of jet . ..	Approx. 0·6 in. .	To suit the requirements for the position of the jet when tilted.
Lamp, bore of jet at end	0·0625 in .	±0·005
Bead, diameter .. .	0 15 in. ..	±0·01
Thermometer Socket :		
Internal diameter	0·6 in.	±0·01
Length of short side measured from under surface of cover	Approx. 0·5 in. ..	—
Length of long side measured from under surface of cover .. .	Approx 0·75 in .	—
Distance of centre of socket from centre of cover measured on the under side	Approx 0·7 in. ..	—
These dimensions are subject to the correct placing of the thermometer when in position.		
Vertical depth of lowest part of thermometer below centre of under side of cover	1·5 in ..	±0 1

The thermometer socket is in the form of a split tube, mounted on a diameter at right angles to the diameter through the centre of the holes, and fitted at such an angle as to bring the bulb of the thermometer, when in place, vertically below the centre of the cover and at the correct distance from it

A white bead, the dimensions of which represent the size of test flame to be used, is mounted in a visible position on the cover

Materials.—All parts excepting bead, brass or gun-metal Bead, ivory or other suitable material.

Cover fitted with stirrer.—Provision may be made in the cover for the reception of a stirrer which projects into the oil cup, for use with viscous materials only.

A bush is mounted on the cover in a position diametrically opposite the thermometer mounting, and its length is such and it is set at such an angle that the stirrer rod clears the oil-level gauge and the blades operate below the level of, and without fouling, the thermometer bulb. The bush is placed as near as practicable to the outer edge of the cover.

	Dimensions.	Tolerance.
		in.
Stem, length, overall	4 in. ..	±0·1
Stem, length, lower end to point of attachment of blades	Approx. 0·1 in. ..	..
Stem, length, lower end to upper surface of collar ..	1·9 in. ..	±0·1
Stem, length, upper surface of collar to lower end of thread	2 in. ..	±0·1
Stem, diameter	Approx. 0·125 in. ..	..
Stem, diameter of collar	Approx. 0·25 in. ..	..
Stem, thread	7 B.A. ..	..
Blades, thickness	17 I.W.G. ..	..
Blades, length excluding root	0·5 in. ..	±0·01
Blades, breadth (all corners of blades rounded) ..	$\frac{5}{16}$ in. (0·3125 in.) ..	±0·01
Blades, angle	Approx. 45° ..	..
Sleeve, length	To suit a stem giving free rotation with no appreciable vertical play when screwed home.	
Diameter of bore	Sliding fit on stem ..	
Diameter of collar	Approx. 0·25 in. ..	..

The stirrer consists of a round stem having four blades or vanes silver soldered in place at one end. A collar is fixed on the stem so that when the stem is inserted into the bush from below, it is arrested at a position such that the correct length protrudes into the oil cup.

The top end of the stem is reduced and screwed.

A long sleeve having an internally screwed, knurled knob soldered to its upper end, is passed over the upper end of the stem and screwed home. The length of the sleeve is such that a flat-faced collar at its lower end just comes into contact with the upper end of the bush, leaving the stirrer free to rotate without appreciable vertical play.

A flat-headed cylindrical plug is provided for insertion in the bush when the stirrer is not in use.

Material.—Brass or gun-metal.

Heating vessel.—The heating vessel or bath consists of two flat-bottomed cylindrical copper vessels placed coaxially one inside the other and soldered at their tops to a flat copper ring, greater in outside diameter than the larger vessel and of smaller inside diameter than the smaller vessel. The space between the two vessels is thus totally enclosed and is used as a water jacket.

	Dimension	Tolerance. in.
Inner vessel, thickness	24 I.W.G.	..
Inner vessel, internal diameter	3 in.	±0·05
Inner vessel, internal depth	2·5 in.	±0·05
Outer vessel, thickness, not less than	24 I.W.G.	..
Outer vessel, internal diameter	5·5 in.	±0·1
Outer vessel, internal depth	5·75 in.	±0·1
Top plate, thickness, not less than	20 I. W. G.	..
Top plate, outer flange projection	0·375 in.	±0·1
Top plate, diameter of central hole	To suit ebonite or fibre ring. Clearance not to exceed 0·1 in.	
Ebonite or fibre ring, internal diameter	Easy fit on oil cup.	..
Ebonite or fibre ring external diameter of flange	2·75 in.	±0·02
Ebonite or fibre ring, overall depth of spigot	0·25 in.	±0·02
Ebonite or fibre ring, thickness, flange and spigot	0·08 in.	±0·005
Ebonite or fibre ring, screws, C. S.	8 B.A. × 0·15 in.	..
Thermometer socket, internal diameter	0·6 in.	±0·01
Thermometer socket, height from top of plate	0·75 in.	±0·05

An ebonite or fibre ring of right-angle section is fitted into the hole in the centre of the flat ring forming the top of the bath and, when the apparatus is in use, the oil cup fits into, and its flange rests upon, this ebonite or fibre ring so that the oil cup is centrally disposed within the heating vessel. The ebonite or fibre ring is secured in place by means of six small screws having their heads sunk below the surface of the ring, to avoid metallic contact between the bath and the oil cup.

A split socket, similar to that on the cover of the oil cup, but set vertically, allows a thermometer to be inserted into the water-space. A funnel and overflow pipe also communicate with the water-space through the top plate and two loop handles are provided thereon.

The bath rests upon a cast-iron tripod stand, to the ring of which is attached a cylindrical copper jacket not less than 24 I.W.G. flanged inwards at the top, and of such dimensions that the bath, while resting firmly on the iron ring, just touches with its outward projecting flange the inward-turned flange of the jacket. Two handles are provided on the outer jacket.

Diameter of the outer jacket 6·5 inches ± 0·1 inch.

Spirit lamp.—A spirit lamp is provided for raising the temperature of the water bath, but any other suitable means may be employed for this purpose.

Thermometers.—Two thermometers are provided, the one for ascertaining the temperature of the bath, the other for determining the flashing-point.

Oil Cup Thermometer.

Type	Mercury in glass, nitrogen filled, graduated on the stem, enamel back.
Length ..	Approximately 9 inches.
Stem	Diameter 0·24 to 0·28 inch.
Bulb	Spherical; made of normal glass approved by the Board of Trade. Diameter, 0·35 inch ± 0·05 inch.
Range ..	50° to 150°F. with expansion chamber. Distance from the bottom of the bulb to the 50° line, 2·75 inches to 3·15 inches. Distance from the 50° line to the 150° line, not less than 4·75 inches.
Immersion ..	A swelling is made in the stem to ensure that the thermometer shall be fixed in its brass collar so that the distance from the top of the collar to the bottom of the bulb is 2·40 inches ± 0·05 inch.
Graduation ..	Scale graduated in 1°F. divisions. Every 5° and every 10° to be indicated by longer lines. Figured at every 10° in full.
Marking ..	"Abel Oil Cup": Identification number, "Fahrenheit": maker's or vendor's name or trade mark.

Water Bath Thermometer.

Type ..	Mercury in glass, nitrogen filled, graduated on the stem, enamel back.
Length ..	Approximately 9 inches.
Stem	Diameter, 0·24 to 0·28 inch.
Bulb	Cylindrical, made of a normal glass approved by the Board of Trade. Length, approximately 0·8 inch. Diameter, not to exceed the diameter of the stem.
Range	90° to 190°F. with expansion chamber. Distance from the bottom of the bulb to the 90° line, 3·95 inches to 4·35 inches. Distance from the 90° line to the 190° line, not less than 3·55 inches.
Immersion ..	A swelling is made in the stem to ensure that the thermometer shall be fixed in its brass collar so that the distance from the top of the collar to the bottom of the bulb is 3·5 inches ±0·1 inch.
Graduation ..	Scale graduated in 1°F. divisions. Every 5° and 10° to be indicated by longer lines. Figures at every 10° in full.
Marking ..	"Abel Water Bath": Identification number, "Fahrenheit": maker's or vendor's name or trade mark.

The brass collar of the thermometer in each case of the following dimensions :—

Outside diameter — push fit in socket.

Thickness of tube — 22 I. W. G.

Thickness of flange — 0·1 inch+0·001 inch.

III. (II) METHOD.

(1) FOR PETROLEUM FLASHING BELOW 90° F.

The test apparatus shall be placed for use in a position where it is not exposed to currents of air or draughts.

The heating vessel or water-bath shall be filled by pouring water into the funnel until it begins to flow out at the spout of the vessel. The temperature of the water at the beginning of the test shall be 130° F., and no heat shall be applied to the water-bath during the test. When a test has been completed and it is desired to make another test the water-bath shall be again raised to 130°F., which may conveniently be done while the petroleum cup is being emptied, cooled and refilled with a fresh sample to be tested. The next test is then proceeded with.

If an oil test-lamp is being used it shall be prepared by fitting it with a piece of flat plaited candle-wick and filling it with colza or rape oil up to the lower edge of the opening of the spout or wick tube. The lamp shall be trimmed so that when lighted it gives a flame of about 0·15 of an inch diameter, and this size of flame, which is represented by the projecting white bead on the cover of the oil-cup is readily maintained by simple manipulation from time to time with a small wire trimmer. A gas test-flame may be employed, and if so, the size of the jet of flame shall be adjusted to the size laid down above.

The bath having been raised to the proper temperature, the cup shall be placed on a level surface in a good light, and the oil to be tested shall be poured into it, until the level of the liquid just reaches the point of the gauge which is fixed in the cup. Before a test is begun the temperature of the oil shall be determined and shall be brought to approximately 60°F. The cover, with the slide closed, shall then be put on to the cup and pressed down so that its edge rests on the rim of the cup, and the cup shall be so placed into the bath or heating vessel, every care being taken to avoid wetting the sides of the cup with the oil. The thermometer in the lid of the cup has been adjusted so as to have the correct immersion when the brass collar of the thermometer is properly seated, and its position shall not in any circumstances be altered. When the cup has been placed in the proper position, the scale of the thermometer faces the operator.

The test-lamp shall then be placed in position upon the lid of the cup. When the temperature has reached 66°F. the operation of testing shall be begun, the test-flame being applied once for every rise of one degree, in the following manner:—

The slide shall be slowly drawn open while a metronome, set at 75 to 80 beats per minute, beats three times and shall be closed during the fourth beat. A pendulum of 24 inches effective length may be used in place of the metronome, counting one beat from one extremity of the swing to the other.

The barometric pressure shall be observed and recorded. No corrections shall be made except in case of dispute, when the flashing-point figure shall be corrected according to the following rule:—

For each inch (25·4 mm.) below 29·92 in. (760 mm.) barometric reading add 1·6°F. to the flashing-point.

For each inch (25·4 mm.) above 29·92 in. (760 mm.) barometric reading subtract 1·6°F. from the flashing-point.

(2) FOR PETROLEUM FLASHING BETWEEN 90° F. AND 120° F.

The air-chamber which surrounds the oil-cup shall be filled with cold water at a depth of 1·5 inch, and the heating vessel or water-bath filled as usual, but also with cold water. The lamp shall then be placed under the apparatus and kept there during the entire operation, and the temperature of the oil raised at the rate of 2°F. to 2·25°F. per minute, the testing being carried out as laid down in the previous section, except that the test flame shall first be applied when the temperature has reached 80°F.

(3) FOR SOLID PETROLEUM MIXTURES.

Solid petroleum mixtures are to be tested in the Abel apparatus in the following manner:—

The solid mixture must be cut into cylinders 1·5 inch long and 0·25 inch in diameter by means of a cork borer or other similar cutter having the correct internal diameter. These cylinders are to be placed in the petroleum cup of the testing apparatus in a vertical position in such number as will completely fill the cup. The cylinders must be in contact with one another, but must not be so tightly packed as to be deformed in shape.

Five or six of the cylinders in the centre of the cup must be shortened to 0·5 inch to allow space for the thermometer bulb.

The air bath of the testing apparatus must be filled to a depth of 1·5 inch with water. The water bath must then be raised to, and maintained at, a temperature of about 80°F.

The cup must then be placed in the air bath, and the temperature of the sample must be allowed to rise until the thermometer in the oil-cup shows 75°F., when the test flame must be applied.

If no flash is obtained, this temperature must be maintained constant in the oil-cup for one hour, at the expiration of which time the test flame must again be applied.

If a flash is obtained, the solid mixture will be subject to the provisions of the Petroleum Act, 1934.

NOTE—It may, in many cases, save time in testing samples of petroleum mixtures to apply the test flame after the sample has been a few minutes in the cup and while still at the temperature of the room in which the test is being carried out, provided that this temperature is below 76°F. If a flash is obtained by this means, it is unnecessary (*for the purpose of Petroleum Act*) to proceed with the test at a higher temperature.

IV. (I) THE PENSKY-MARTENS APPARATUS.

The standard Pensky-Martens Closed Tester shall be used for determining the flashing-point of all petroleum products having a flashing-point above 120°F.

Every instrument shall be marked with the letters I.P.T., an identification number (on the cup, cover and top plate) and the name of the maker or vendor, such stamping implying a guarantee that the instrument complies with the requirements specified below.

The Pensky-Martens Tester shall include the following major parts:—

Cup.—The cup of the standard Pensky-Martens Tester shall be made of brass and shall satisfy the following dimensional specifications:—

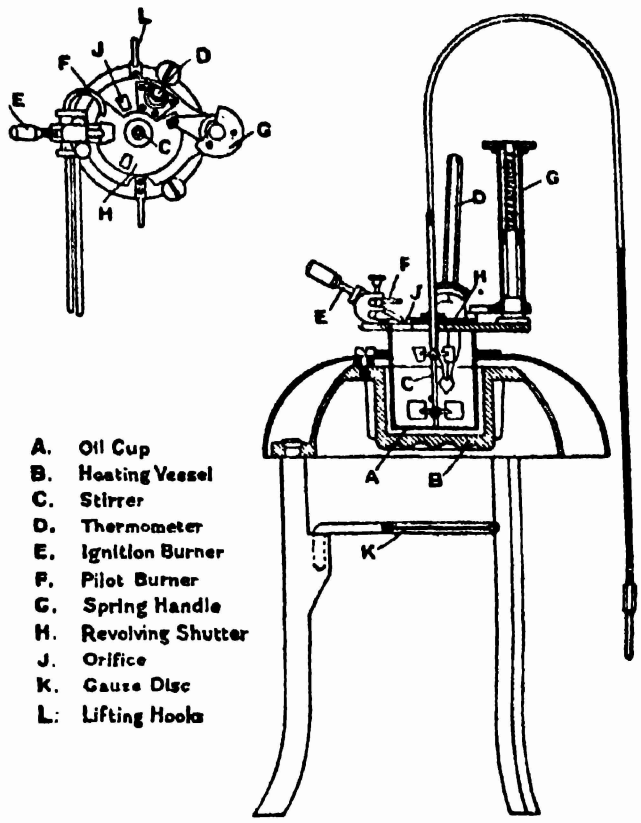

THE PENSKY-MARTENS CLOSED TESTER.

Dimensions.	Inches. Normal.	Tolerances.
Inside diameter below filling mark ..	2·000	±0·050
Difference, inside and outside diameters below filling mark	0·125	±0·010
Inside height	2·200	±0·050
Thickness of bottom	0·095	±0·025
Distance from rim to filling mark ..	0·860	±0·015
Distance lower surface flange to bottom of cup	1·795	±0·015

The inside of the cup may be turned to a slightly larger diameter above the filling mark and the ouside may be tapered above the flange but the wall thickness at the upper edge shall be not less than 0·04 in. The flange should be approximately 0·5 in. wide and approximately 0·125 in. thick. It shall be equipped with devices for locating the position of the lid on the cup and the cup centrally in the stove. A handle, attached permanently to the flange of the cup, is a desirable accessory.

NOTE.—If the bottom of the cup is affixed it shall be brazed or hard soldered.

Stirring device.—The lid shall be equipped with a stirring device consisting of a vertical steel shaft, not less than 0·1 in. nor more than 0·125 in. in diameter, mounted in the centre of the cup, carrying two two-bladed brass propellers, and provided with any convenient means for operating. The blades of both propellers shall be approximately 0·3 in. wide and shall be set at an angle of approximately 45°. The smaller (upper) propeller shall have an over-all diameter of approximately 0·75 in. The larger (lower) propeller shall have an over-all diameter between 1·25 and 1·75 in. The thickness of the propeller blades shall be not less than 0·048 in. nor more than 0·08 in., which limits correspond respectively to No. 18 and No. 14 S.W.G. The propeller blades shall be brazed or hard soldered to collars on the vertical shaft and the collars shall have horizontal and vertical dimensions not greater than 0·4 in.

The plane of the centre of the upper propeller shall be 0·4 in. below the level of the rim of the cup. The plane of the centre of the lower propeller shall be 2·0 in. below the level of the rim of the cup. The level of the rim of the cup is in effect the level of the plane part of the portion of the lower surface of the lid inside the rim.

Cover proper.—The cover proper shall be of brass and shall have a rim projecting downward almost to the flange of the cup and fitting the outside of the cup closely. The thickness of the cover, measured just inside the rim, shall be not less than 0·03 in. nor more than 0·08 in. There shall be a proper locating device engaging with a corresponding locating device on the flange of the cup.

There shall be four openings in the cover.

Opening A is an area defined by arcs of two concentric circles and the intersected lengths of two radii. The radius of the outer circle shall be not less than 0·94 in. nor more than 0·97 in. The chord of the arc of the outer circle shall be not less than 0·5 in. nor more than 0·54 in.

Openings B and C are equal areas, each of the same general form as opening A but of approximately half the (angular) width. The radii of the defining inner and outer circles shall be within the limits specified for the radii of the two circles, arcs of which partially define opening A. The chord of the outer arc for opening B or opening C shall be not less than 0·19 in. nor more than 0·22 in. The sum of the areas of openings B and C shall be not less than 75 per cent. nor more than 100 per cent. of the area of opening A.

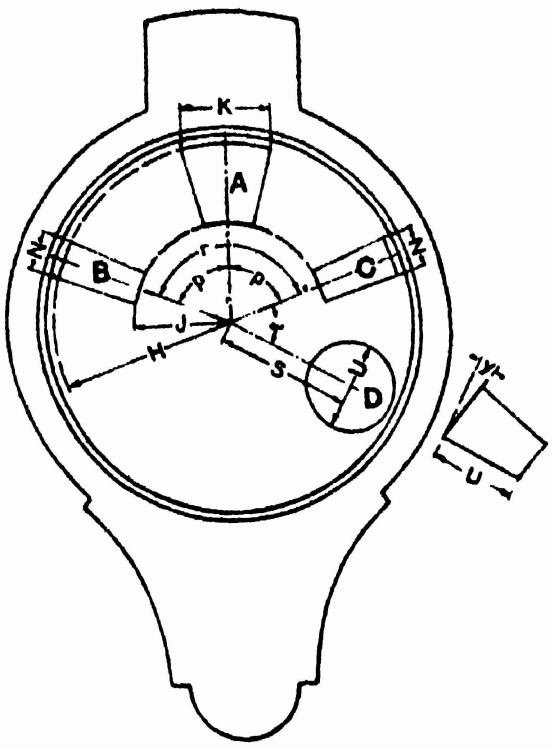

H	Minimum	0·94 in.,	maximum	0·97 in.
J	"	0·53 in.,	"	0·56 in.
K	"	0·50 in.,	"	0·54 in.
N	"	0·19 in.,	"	0·22 in.
S	Approximately	0·75 in.		
U	"	0·5 in.		
Angles *p* Equal.				
Angle r	Minimum	135°,	maximum	140°.
" *t*	"	50°,	"	60°.
" *y*	"	10°,	"	15°.

COVER OF PENSKY-MARTENS TESTER.

Openings B and C shall be equally distant from opening A, and radii drawn through each of their centres shall be at an angle of not less than 135° nor more than 140°.

Openings A, B, and C need not conform exactly to the shape of geometrical figures bounded by arcs of two concentric circles and intersected length of radii. Their boundaries must, however, fall on or between the lines indicated by the limiting values of the dimensional specification of the preceding text.

Opening D is a split tube to grip the thermometer collar. It shall be set at an angle of not less than 10° nor more than 15° from the perpendicular. Its centre is approximately 0·75 in. from the centre

of the lid and on a radius at an angle of not less than 50° nor more than 60° from the radius passing through the opening C. Its height shall be such that, when a standard thermometer is in position, the bottom of the bulb shall be 1·5 in. ± 0·1 in., below the level of the rim of the cup (which corresponds to the lower surface of the portion of the lid inside the rim).

Shutter.—The lid shall be equipped with a brass shutter, approximately 0·1 in. thick, operating on the plane of the upper surface of the lid. The shutter shall be so shaped and mounted that it rotates on the surface of the lid about an axis normal to the lid, and through its centre, between two stops so placed that when in one extreme position the openings A, B, and C of the lid are completely closed and when in the other extreme position these openings are completely opened.

Flame exposure device.—The tip of the flame jet shall have an orifice 0·027 in. to 0·03 in. diameter. The flame-exposure device shall be equipped with an operating mechanism which, when the shutter is in the "open" position, depresses the tip so that the centre of the orifice is between the plane of the under and upper surfaces of the lid proper, at a point on a radius passing through the centre of the larger opening A and approximately 0·1 in. from the outer edge of the opening.

The test flame shall be approximately spherical and shall be regulated to be of the same mean diameter as a bead 0·16 in. in diameter of some suitable material mounted on the lid.

The mechanism operating the shutter should be of the spring type and constructed so that when at rest the shutter shall completely close the three openings. When operated to the other extreme the three openings in the lid shall be fully open and the tip of the exposure tube shall be fully depressed.

NOTE.—A pilot flame for automatic relighting of the test flame should be provided.

Where gas is not available, an oil burner shall be used as the test flame, the position of which shall correspond with that of the gas flame previously specified.

Stove.—Heat shall be supplied to the cup by means of a properly designed stove which is equivalent to an air bath. This stove shall consist of (1) an air bath and (2) a top plate on which the flange of the cup rests.

Air bath.—The air bath shall have a cylindrical interior 1·625 in. to 1·66 in. deep and a diameter not less than 0·125 in. nor more than 0·156 in. greater than the outside diameter of the cup, with the minimum clearance of 0·05 in. The air bath shall be a flame-heated metal casting.

NOTE.—The casting shall be so designed and used that the temperature of bottom and walls is approximately the same. On this account it should be not less than 0·25 in. thick. The apparatus shall be designed so that products of combustion of the flame cannot come into contact with any part of the cup.

Top plate.—The top plate shall be of metal. The total distance from the upper surface of the plate to the bottom of the air bath shall exceed the distance from the under surface of the flange to the bottom of the cup by not less than 0·063 in. nor more than 0·125 in.

The top plate shall be mounted with an air gap between it and the air bath. The top plate may be attached to the air bath by means of three screws and spacing bushings. The spacing bushings should be of

proper thickness to define the air gap which shall be not less than 0·125 in. nor more than 0·187 in. The spacing bushings shall be not more than 0·375 in. in diameter.

Thermometers.—A low range thermometer shall be used with the Standard Pensky-Martens tester for determining the flashing-point above 120°F. The thermometer shall comply with the specification given below.

The thermometers shall conform to the following general specification:—

Type.—Mercury in glass, except where otherwise stated. Engraved stem. Nitrogen filled.

Stem.—The stem shall be made of lead glass or other suitable glass. Enamel back.

Bulb.—The bulb shall be made of a suitable thermometric glass approved by the National Physical Laboratory. At present these glasses are:—

—	Identification mark.	Approved for temperatures up to—
Normal glass made by James Powell and Sons, Ltd.	Single blue stripe ..	350°C.*
Normal glass made by Frank Tomey and Co., Ltd.	Two blue stripes ..	350°C.*
Normal glass, Jena^{111} made by Schott and Genossen.	Purple stripe ..	350°C.*
Normal glass, Gege Eff, made by Glaswerk Guxtav Fischer.	Blue and a red stripe ..	350°C.
Corning Borosilicate made by Corning Glass Co.	....	450°C.
Jena 59^{111} made by Schott and Genossen ..	....	450°C.
Jena 2954^{111} made by Schott and Genossen	Single black stripe ..	450°C.

Expansion and contraction chambers.—No contraction chamber shall be above the immersion line and no enlargement of the bore shall be within 10 mm. of the immersion line or of any part of the scale.

Graduation and figuring.—The graduation lines shall be clearly etched, and of uniform thickness not exceeding 0·15 mm. The lines shall all be at right angles to the axis of the thermometer. When the thermometer is viewed from the front and in a vertical position the lines shall all finish on a line parallel to the axis on the left hand side. Certain of the graduation lines shall be extended on the right hand side but the shortest graduations shall not extend across the bore. When the diameter of the tube permits the figures shall be upright when the thermometer is viewed from the front and in a vertical position, and should preferably be placed so that they would be intersected by the line to which they refer if it were extended.

*May be used up to 400°C. if a careful examination of the zero is made periodically.

Marking.—In addition to the special markings given in the table, each thermometer shall be marked with an identification number, and the maker's or vendor's name or trade mark.—

Name and special marking.	"I. P. T. P. M.—Low."
Dimensions— Stem, diameter	6·7 mm.*
Bulb, shape	Round.
Bulb, length	....
Bulb, diameter	8 mm. max.
Overall length, ± 5 mm.	275 mm.
Length of graduated portion	150-180 mm.
Distance, bottom of bulb to 20° mark	70-85 mm.
Range	20°F. to 230°F.
Graduation	1°F.
Longer lines at each	5°F. and 10°F.
Figured at each	10°F.
Expansion chamber	Required.
Immersion	2·2 in.
Top finish	Glass ring.

Each thermometer shall be mounted securely in a thermometer collar so that from the under-side of this collar to the bottom of the bulb the distance is 2·1 in. (± 0·05 in.). The thermometer collar shall have an outside diameter of 0·5 in., ± 0·002 in., and a flange 0·1 in., ± 0·01 in., in thickness. The cement used to fasten the thermometer into the collar shall be of such a nature that it will withstand the action of oil up to the highest temperature at which the thermometer is used.

Drying of the sample.

If gas oil or fuel oil is being tested, the sample shall be dried by the following method:—

One hundred grams of well-dried granular calcium chloride is placed in a dry wide-mouth stoppered glass bottle.

Two hundred and fifty millilitres† of the oil is then poured upon the calcium chloride. The stopper is secured in position by tying. The bottle is then well-shaken and is stood in a vessel of water, the level of the water being up to about one-third of the height of the oil

*A swelling to be provided to ensure the location of the thermometer collar at the correct point.

† If a smaller quantity of oil is to be dried the amount of calcium chloride must be adjusted in proportion.

in the bottle. The water is next raised to a temperature of 50°C. (120°F.), and is maintained at this temperature for a period of seven hours, the bottle and its contents being well-shaken up at intervals of about an hour. At the end of this treatment the bottle and its contents are allowed to cool to atmospheric temperature; the bottle is then opened and sufficient of the oil for test filtered through paper on a Buchner funnel.

IV. (II) METHOD.

All parts of the cup and its accessories shall be thoroughly clean and dry before starting the test. Particular care should be taken to avoid the presence of any gasoline or naptha used to clean the apparatus after a previous test.

The cup shall be filled with the oil to be tested up to the level indicated by the filling mark.

The lid shall be placed on the cup and the latter set in the stove. Care should be taken to have the locating devices properly engaged. The thermometer shall be inserted.

The test flame shall be lighted and adjusted so that it is of the size of a bead 0·16 in. in diameter.

Heat shall be supplied at such a rate that the temperature read on the thermometer increases not less than 9 or more than 11 degrees per minute. The stirrer shall be turned at a rate of approximately 60 revolutions per minute.

Application of the test flame shall be made at each temperature reading which is a multiple of 2°F. up to 220°F. For the temperature range above 220°F., application shall be made at each temperature reading which is a multiple of 5°F. The first application of the test flame shall be made at a temperature at least 50°F. below the actual flashing-point. Application of the test-flame shall be made by operating the device controlling the shutter and test-flame burner so that the flame is lowered in one-half second, left in its lowered position for one second, and quickly raised to its high position. Stirring shall be discontinued during the application of the test-flame.

The flashing-point is taken as the temperature read on the thermometer at the time of the flame application that causes a distinct flash in the interior of the cup. The true flash must not be confused with the bluish halo that sometimes surrounds the test flame for the applications preceding the one that causes the actual flash.

The barometric pressure shall be observed and recorded. No corrections shall be made except in case of dispute, when the flashing-point figure shall be corrected according to the following rule:—

For each inch (25·4 mm.) below 29·22 in. (760 mm.) barometric reading add 1·6°F. to the flashing-point.

For each inch (25·4 mm.) below 29·22 in. (760 mm.) barometric reading subtract 1·6°F. from the flashing-point.

V. THE FLASHING-POINT.

If a flash takes place at any temperature below 76°F. the temperature at which it occurs is noted. Two fresh portions of the sample are then to be successively tested in a similar manner and the results recorded. If no greater difference than two degrees Fahrenheit exists

between any two of the three recorded results and if in no instance the flash has taken place within eight degrees Fahrenheit of the temperature at which the testing was commenced, the average of the three readings gives the flashing-point recorded by that particular instrument, but without either apparatus correction or thermometer correction. In the event of there being a greater difference than two degrees Fahrenheit between any two of the readings, or if the flash has occurred within eight degrees of the temperature at which the testing was commenced, the series of tests is to be rejected and a fresh series of three similarly obtained.

If, however, a flash has occurred at or below 64°F. when the test was applied in the manner above described, the next test shall be commenced 10°F. lower than the temperature at which the flash had been previously obtained, and this procedure shall be continued until the results of three consecutive tests do not show a greater difference than two degrees Fahrenheit and until a flash has not occurred in any of the three tests within eight degrees Fahrenheit of the temperature at which the test was commenced. Provided always that if at the commencement of the series of tests a flash has occurred on the first application of the test-flame at 66°F. and if a flash has also occurred on the first application of the flame in each of the three successive tests in which the test-flame is first applied at 66°F. as above directed, the testing officer shall certify that the petroleum has a flashing-point below 67°F. and the sample shall be reported as "dangerous petroleum".

If a temperature of 76°F. has been reached without a flash occurring, the application of the test-flame is to be continued at every degree rise of temperature until a temperature of 89°F. has been reached. If no flash occurs up to this point, the test shall be continued on a fresh sample as in Section III (II) (2) above.

If no flash occurs up to 120°F., the flashing-point shall be determined by the Pensky-Martens apparatus and method, as described above.

SCHEDULE IV.

[SEE RULE 1 (2).]

Modifications of the rules in their application to Burma.

1. In rule 3—

(*a*) in clause (*b*) for the words "in India" the words "appointed by the Government of Burma" shall be substituted.

(*b*) for clause (*d*) the following shall be substituted, namely:—

"(*d*) 'District Authority' means—

(*i*) in Rangoon, the Commissioner of Police;

(*ii*) in the Yenangyaung and Chauk Notified Oilfields, the Warden, Yenangyaung; and

(*iii*) elsewhere, the District Magistrate."

2. The heading "Part I—General" preceding rule 5 and the heading "Part II—Importation by sea" preceding rule 7 shall be omitted.

3. For rule 7, the following shall be substituted, namely:—

"7. *Importation by sea.*—Petroleum shall not be imported by sea except into the ports of Akyab, Bassein, Moulmein and Rangoon".

4. In rule 8 the words, figure and brackets "sub-rule (1) of " shall be omitted.

5. In rule 9 for the words "British India" the word "Burma" shall be substituted.

6. For clause (*a*) of sub-rule (2) of rule 14, the following clause shall be substituted, namely:—

"(*a*) the testing officer's report on any petroleum;"

7. In rule 18 for the words "British India" the word "Burma" shall be substituted.

8. The heading "Part III—Importation by Land" and rules 20 to 23 shall be omitted.

9. In rule 30 for the words "Governor General in Council" the words "Government of Burma" shall be substituted.

10. To rule 31 the following proviso shall be added, namely:—

"Provided that this rule shall not apply to open country craft carrying such class of crude petroleum in bulk as the Warden of the Oilfields, Yenangyaung, may specify in writing and subject to such conditions as he may impose".

11. In clause (*c*) of rule 38 for the words "Governor General in Council" the words "Government of Burma" shall be substituted.

12. In rule 48—

(*a*) in sub-rule (1) the words, figure and brackets "sub-rule (1) of" wherever they occur shall be omitted;

(*b*) sub-rule (2) shall be omitted and sub-rule (1) shall be renumbered as rule 48.

13. For rule 49, the following rule shall be substituted, namely:—

"49. *Transport by sea of petroleum which has been tested.*—Petroleum which has been tested at one of the ports specified in rule 7 may be transported to any other port and the provisions of rules 8 to 14, 16 and 17 shall apply to such petroleum when it arrives at such other port."

14. Rule 50 shall be omitted.

15. In sub-rule (1) of rule 81 after the figures "68" the figures "70" shall be inserted.

16. In sub-rule (5) of rule 115 for the words "Governor General in Council" the words "Government of Burma" shall be substituted.

17. In sub-rule (1) of rule 122 and in rule 129 for the words "Governor General in Council" the words "Government of Burma" shall be substituted.

18. In rule 132—

(*a*) in sub-rule (1) for the words "the Chief Inspector" the words "an officer appointed by the Government of Burma in this behalf" shall be substituted;

(*b*) in sub-rule (2) for the words "The Chief Inspector" the words "Such officer" shall be substituted.

19. In rules 135, 138, 140(2), 141(2), 143 and 145 for the words "Chief Inspector" the words "officer appointed under rule 132" shall be substituted.

20. In sub-rule (1) of rule 155—

(*a*) for the words "British India" the word "Burma" shall be substituted; and

(*b*) for the proviso the following proviso shall be substituted, namely:—

"Provided that no sample need be taken of petroleum which is declared to be dangerous".

21. In Schedule II—

(*a*) in column 3 of Form A, for the words "British India" the word "Burma" shall be substituted;

(*b*) in column 1 of Form D, in entry 2 the word "Province" shall be omitted; and

(*c*) in Forms K, L and M for the words "*Chief Inspector of Explosives in India*" the words "*Chief Inspector of Explosives*" shall be substituted.

SCHEDULE V.

[SEE RULE 1 (3).]

Modifications of the rules in their application to Aden.

1. In rule 3—

(*a*) for clause (*b*) the following clauses shall be substituted, namely:—

"(*b*) 'Chief Commissioner' means the Chief Commissioner of Aden;

(*bb*) 'Chief Inspector' means any officer appointed by the Chief Commissioner in this behalf";

(*b*) for clause (*d*) the following clause shall be substituted, namely:—

"(*d*) 'District Authority' means the District Magistrate";

(*c*) in clause (*h*) the words "but does not include a well-head tank" shall be omitted; and

(*d*) clause (*n*) shall be omitted.

2. The heading "Part I—General" preceding rule 5 and the heading "Part II—Importation by sea" preceding rule 7 shall be omitted.

3. Rule 7 shall be omitted.

4. In rule 8 for the words "any of the ports mentioned in sub-rule (1) of rule 7" the words "the port of Aden" shall be substituted.

5. In rule 9 the words "at that port or at any other port in British India" shall be omitted.

6. In rule 18 for the words "whether within or beyond the limits of British India" the words "beyond Aden" shall be substituted.

7. The heading "Part III—Importation by land" and rules 20 to 23 shall be omitted.

8. Rules 30 to 38 shall be omitted.

9. In sub-rule (4) of rule 39 the words "by vessels certified under rule 30" shall be omitted.

10. For rule 42, the following rule shall be substituted, namely:—

"42. *Naked lights, fire and smoking prohibited during transhipment.*—No fire, naked light, fusees, matches or other appliance for producing ignition or explosion and no smoking shall be allowed on board any barge, flat or lighter used for the transhipment of petroleum to or from any vessel within the limits of the port:

Provided that nothing in this rule shall prevent the use on a self-propelled barge of the machinery of propulsion".

11. Rules 48 to 50, the heading "Part III—Coastwise transport of dangerous petroleum otherwise than in bulk" and rules 51 to 62 shall be omitted.

12. In rule 83 the words "in any area in which operations for the winning of natural petroleum or natural gas or both are carried on or" and the words "refineries and" shall be omitted.

13. In rule 90 the proviso shall be omitted.

14. In sub-rule (1) of rule 100 the words "other than a well-head tank" shall be omitted.

15. In sub-rule (1) of rule 101 the words "other than well-head tanks" shall be omitted.

16. In rule 102 the words "well-head tanks or" shall be omitted.

17. In rule 115, sub-rules (3), (4) and (5) shall be omitted.

18. In rule 117, sub-rule (2) shall be omitted and sub-rule (1) shall be renumbered as rule 117.

19. For rule 122, the following rule shall be substituted, namely:—

"122. *Appeals.*—(1) Any person may appeal to the Chief Commissioner from an order of the District Authority refusing to grant, amend or renew a licence or cancelling a licence.

(2) Every appeal shall be in writing and shall be accompanied by a copy of the order against which the appeal is made.

(3) The appeal shall be presented within 30 days."

20. In rule 128, for sub-rules (2) and (3) the following sub-rule shall be substituted, namely:—

"(2) All fees chargeable under these rules shall be paid by means of impressed stamps or in cash or by cheque".

21. In rule 129 for the words "Governor General in Council" the words "Chief Commissioner" shall be substituted.

22. Rule 131 shall be omitted.

23. Chapter VII shall be omitted.

24. In sub-rule (1) of rule 155 the words "If the importer so desires the sampling officer shall also take samples of all the petroleum on board which it is intended to land at any other port in British India" shall be omitted.

25. Rules 157, 158 and 159 shall be omitted.

26. For rule 160, the following rule shall be substituted, namely:—

"160. *Methods of test.*—Petroleum shall be tested in such manner as the Chief Commissioner may from time to time direct"

27. Rule 163 shall be omitted.

28. In column 4 of Schedule I against Articles 4, 5, 6 and 7, for the words "Chief Inspector" the words "Chief Commissioner" shall be substituted.

29. In Schedule II—

(a) in column 3 of Form A the words "in British India at...Name of port" shall be omitted;

(b) in column 1 of Form D, for entry 2, the following entry shall be substituted, namely:—

"Situation of the premises where petroleum is to be stored...";

(c) Forms E and F shall be omitted;

(d) in condition 14 of Form I, condition 12 of Form J, condition 21 of Form K, condition 19 of Form L and condition 14 of Form M, the words "to the nearest Magistrate or" shall be omitted;

(e) in Forms K, L and M, for the words *"Chief Inspector of Explosives in India"* the words *"Chief Commissioner"* shall be substituted; and

(f) condition 10 of Form L shall be omitted.

30. Schedule III shall be omitted.

The 27th March 1937.

No. M.-826 (2).—In exercise of the powers conferred by sub-section (*1*) of section 30 of the Petroleum Act, 1934 (XXX of 1934), as applied to Calcium Phosphide by the notification of the Government of India, Department of Industries and Labour, No. M.-826(1), dated the 23rd March 1937, read with section 22 of the General Clauses Act, 1897 (X of 1897), the Governor-General in Council is pleased to direct that, in so far as they are applicable, the Carbide of Calcium Rules, 1937, and the Burma Carbide of Calcium Rules, 1937, shall apply, with such verbal modifications, not affecting the sense, as may be necessary for such application, to Calcium Phosphide.

Provided that—

(a) nothing in rule 20 of the said rules shall apply to Calcium Phosphide;

(b) nothing in rules 14 and 18 of the said rules shall apply to Calcium Phosphide contained in specially prepared danger and distress lights carried by any ship for use on that ship.

No. M.-826 (7).—In exercise of the powers conferred by sub-section (*1*) of section 30 of the Petroleum Act, 1934 (XXX of 1934), read with section 22 of the General Clauses Act, 1897 (X of 1897), the Governor-General in Council is pleased to apply all the provisions of the first-mentioned Act and of the Petroleum Rules, 1937, to each of the following substances, namely:—

1. Acetone.

2. Wood Naphtha.

3. Methyl Alcohol.

The 23rd March 1937.

No. L.-1785.—In pursuance of sub-section (2) of section 1 of the Indian Boilers (Amendment) Act, 1937 (XI of 1937), the Governor-General in Council is pleased to appoint the 28th March 1937 as the date on which the said Act shall come into force.

The 27th March 1937.

No. L.-3002.—In exercise of the powers conferred by sub-section (3) of section 2 of the Workmen's Compensation Act, 1923 (VIII of 1923), the Governor-General in Council, having given previous notice of his intention so to do, is pleased to add to Schedule II to the said Act the persons employed, otherwise than in a clerical capacity or as agricultural labourers, in the handling or transport of goods in, or within the precincts of:—

(a) any warehouse or other place in which goods are stored, and in which on any one day of the preceding twelve months ten or more persons have been so employed; or

(b) any market in which on any one day of the preceding twelve months one hundred or more persons have been so employed.

A. G. CLOW,

Secy. to the Govt. of India.

FOREIGN AND POLITICAL DEPARTMENT.

NOTIFICATIONS.

New Delhi, the 18th March 1937.

No. 166-E.—Mr. R. S. T. John, I.C.S. (Bengal), is appointed to the Political Department of the Government of India substantively on probation and placed at the disposal of the Government of the North-Western Frontier Province, with effect from the afternoon of the 29th December 1936.

B. J. GLANCY,

Political Secy. to the Govt. of India.

The 15th March 1937.

No. 150-X.—In exercise of the powers conferred by the Indian (Foreign Jurisdiction) Order in Council, 1902, and all other powers enabling him in that behalf, the Governor-General in Council is pleased:—

(1) to invest Mr. T. B. Jameson, I.C.S., District Judge, Darjeeling, Jalpaiguri and Dinajpur, with the powers of a Court of Session as described in the Code of Criminal Procedure, 1898 (Act V of 1898), to hear, within his territorial jurisdiction in British India, appeals in those cases arising in Sikkim in which the Governor-General in Council has jurisdiction except cases against European British subjects and persons jointly charged with European British subjects, and

(2) to direct that a person convicted by the said Mr. Jameson in the exercise of powers hereby conferred may appeal to the High Court of Judicature at Fort William in Bengal in the same manner and to the same extent as a person convicted by the Political Officer in Sikkim may appeal under Part I of the Notification of the Government of India in the Foreign and Political Department, No. 64-I., dated the 19th February 1929.

H. A. F. METCALFE,

Foreign Secy. to the Govt. of India.

LEGISLATIVE DEPARTMENT.

NOTIFICATION.

New Delhi, the 20th March 1937.

No. F.102/37-C. & G.—The Governor General is pleased to accept the resignation by Mr. A. S. Hands, C.I.E., of his office of Member of the Legislative Assembly.

G. H. SPENCE,
Secy. to the Govt. of India.

REFORMS OFFICE.

NOTIFICATION.

New Delhi, the 22nd March 1937.

No. F.5/1X/37-G (A).—The following Orders of the King's Most Excellent Majesty in Council are published for general information:—

THE GOVERNMENT OF INDIA (FAMILY PENSION FUNDS) ORDER, 1936.

AT THE COURT AT BUCKINGHAM PALACE.

The 18th day of December, 1936.

PRESENT:

THE KING'S MOST EXCELLENT MAJESTY IN COUNCIL.

WHEREAS by section two hundred and seventy-three of the Government of India Act 1935, (in this Order referred to as "the Act") His Majesty in Council is empowered to provide for the vesting of certain family pension funds in Commissioners and for other matters in connection with those funds:

AND WHEREAS certain other provisions are made by the said section in connection with those funds:

AND WHEREAS by section three hundred and ten of the Act His Majesty in Council is empowered, for the purpose of facilitating the transition from the provisions of the Government of India Act to the provisions of the Act, to direct that the Act shall, during a specified period, have effect subject to adaptations and modifications:

AND WHEREAS difficulties will arise unless certain adaptations and modifications are made in the said section two hundred and seventy-three in relation to the period before the commencement of Part III of the Act:

AND WHEREAS the public Trustee has consented to accept the trusts created by this Order and to become a Commissioner thereunder accordingly:

AND WHEREAS a draft of this Order has been laid before Parliament in accordance with the provisions of subsection (1) of section three hundred and nine of the Act and an Address has been presented to His Majesty by both Houses of Parliament praying that an Order may be made in the terms of this Order:

NOW, THEREFORE, His Majesty, in the exercise of the said powers and of all other powers enabling him in that behalf, is pleased, by and with the advice of His Privy Council, to order and it is hereby ordered as follows:—

Short Title.

1. This Order may be cited as "The Government of India (Family Pension Funds) Order, 1936"

The Funds.

2. Not later than the first day of April, nineteen hundred and thirty-seven, two funds shall be formed, the first out of the moneys contributed and to be contributed under the Indian Military Service Family Pension Regulations for the purpose of paying pensions payable under those regulations, and the second out of the moneys contributed and to be contributed under the Indian Civil Service Family Pension Rules for the purpose of paying pensions payable under those rules.

3. In this Order the expression "the funds" means the Indian Military Widows' and Orphans' Fund, the Superior Services (India) Family Pension Fund, and the two funds directed to be formed by the provisions of the last preceding paragraph

The Commissioners.

4. There shall be a body of Commissioners for each of the funds.

5. (1) Each of the said bodies shall consist of five Commissioners, of whom one shall be the Public Trustee and four shall be appointed by the Secretary of State.

The Secretary of State shall so exercise his powers under this subparagraph as to secure that two of the Commissioners for each fund are persons who are, or have been, subscribers to that fund

(2) Each of the Commissioners appointed by the Secretary of State shall be appointed for a period of four years, and shall be eligible for reappointment:

Provided that—

(*a*) in the case of each fund, two of the first four Commissioners appointed by the Secretary of State, to be selected by lot, shall retire after two years, but shall be eligible for reappointment;

(*b*) any Commissioner appointed by the Secretary of State may at any time, by notice in writing to the Secretary of State, resign his office, and the Secretary of State may terminate the appointment of any such Commissioner if satisfied that that Commissioner is for any reason unfit to perform, or unable properly to perform, the duties of his office.

6. (1) Each body of Commissioners may act notwithstanding any vacancy in their number.

(2) At any meeting of the Commissioners, three shall be a quorum, and, in the event of a difference of opinion, the decision of the majority of the Commissioners present shall be the decision of the Commissioners.

(3) Notwithstanding anything in the last preceding sub-paragraph the Commissioners may by rules of business provide that a meeting need not be held for the discussion and determination of any matter if, after consultation in writing the Commissioners are all agreed as to the decision to be taken.

(4) Any instrument shall be deemed to be validly executed by any of the said bodies of Commissioners if it is signed or sealed, as the case may be, by three or more of the Commissioners, of whom the Public Trustee shall be one; and any instrument signed or sealed on behalf of the Public Trustee in any manner authorised by the Public Trustee Act, 1906, and the rules made thereunder shall be deemed for the purposes of this sub-paragraph to be signed or sealed, as the case may be, by the Public Trustee.

7. (1) The said bodies of Commissioners shall be known respectively as the Commissioners for the Indian Military Widows' and Orphans' Fund, the Commissioners for the Superior Services (India) Family Pension Fund, the Commissioners for the Indian Military Service Family Pension Fund, and the Commissioners for the Indian Civil Service Family Pension Fund; and investments may be made and moneys held by them in the names respectively assigned to them by this sub-paragraph.

(2) Investments so made and moneys so held shall, on any change in the membership of the Commissioners, devolve to the Commissioners for the time being without transfer or assignment, and any authority or direction given by the Commissioners with respect to dividends, interest or other moneys accruing to the Commissioners shall remain valid notwithstanding any change in their membership.

(3) The production of a notification in the London Gazette of the appointment of the Commissioners or of any change in the membership of the Commissioners shall be sufficient evidence thereof.

8. (1) There shall be paid to a Commissioner appointed by the Secretary of State out of the fund for which that Commissioner acts such remuneration, if any, as may be specified by the Secretary of State at the time of his appointment.

(2) The fees payable to the Public Trustee in respect of any fund shall be paid out of that fund.

9. Any administrative expenses incurred by any of the said bodies of Commissioners shall be paid out of the fund in their hands.

Vesting of the Funds in the Commissioners.

10. The balances existing at the end of March, nineteen hundred and thirty-six, in respect of the Indian Military Widows' and Orphans' Fund and the Superior Services (India) Family Pension Fund, and in respect of the moneys theretofore contributed under the Indian Military Service Family Pension Regulations and the Indian Civil Service Family Pension Rules shall, subject to the provisions of subsection (3) of section two hundred and seventy-three of the Act, be transferred to the appropriate Commissioners before the end of March, nineteen

hundred and thirty-nine by such instalments, and with such interest, as the Secretary of State may determine. Any question as to the amount to be transferred under this paragraph to any body of Commissioners shall be decided by the Secretary of State.

11. Any sums paid under the last preceding paragraph before the commencement of Part III of the Act shall be paid out of the revenues of India, any sums paid thereunder after the commencement of Part III of the Act but before the establishment of the Federation shall be paid out of the revenues of the Governor-General in Council, and any sums paid thereunder after the establishment of the Federation shall be paid out of the revenues of the Federation.

12. The Commissioners shall invest so much of the funds respectively in their hands as is available for investment in such securities as they think fit, being either—

(*a*) securities in which a trustee may invest trust moneys under the powers of section one of the Trustee Act, 1925, as extended by any subsequent enactment; or

(*b*) the stocks, funds, bonds, mortgages, debentures or securities of any public body incorporated in the United Kingdom by or under any Act of Parliament or of the Parliament of Northern Ireland; or

(*c*) the bonds, mortgages, debentures, debenture or rentcharge stock of any railway, gas, electric light or power company in the United Kingdom; or

(*d*) the preference stock or shares of any such gas, electric light or power company which has paid a dividend on its ordinary stock or shares at a rate of not less than three per cent. during each of the five years immediately preceding the date of the investment,

and may, as and when they think fit, realise, convert or otherwise deal with any such securities:

Provided that—

(i) the proviso to sub-section (1) of section two of the Trustee Act, 1925 (which restricts the purchase by trustees of securities standing at a premium), shall not apply to the Commissioners;

(ii) the Commissioners shall not invest in real securities in the Irish Free State, or in the stock of the Bank of Ireland.

13. Any interest, dividends or other sums received by the Commissioners of any of the funds in respect of any such securities shall form part of that fund.

Functions of Secretary of State.

14. (1) The funds shall in all other respects be administered by the Secretary of State, and all pensions payable out of any of the funds shall be paid by, or by authority of, the Secretary of State, and all contributions to any of the funds received by any person shall be accounted for to the Secretary of State.

(2) For the avoidance of doubt, it is hereby declared that the requirement of this paragraph that the funds shall be administered by the Secretary of State does not exempt the proper officers in India, Burma, Aden or elsewhere from the duty of collecting and accounting

for the contributions, and paying the pensions, in the cases and classes of case in which contributions and pensions have heretofore been so collected and paid.

15. The Commissioners shall, as and when requested by the Secretary of State, pay to him out of the funds for which they are respectively responsible such sums as he may certify to be required by him for the purposes of the fund in question.

16. The Secretary of State shall pay over to the appropriate Commissioners all contributions to any of the funds made after the end of March, nineteen hundred and thirty-six:

Provided that nothing in this paragraph shall be construed as preventing the application by, or by authority of, the Secretary of State, and with the consent of the Commissioners, of a part of any such contributions for the purpose of meeting obligations falling to be met out of the fund.

17. Notwithstanding anything in Part X of the Act or in the regulations or rules relating to any of the funds, the Secretary of State may, having obtained from an actuary a report on any of the funds, make such alterations in any pensions payable out of that fund as may appear to him after consideration of the report to be reasonably necessary in consequence of the transfer of that fund effected under this Order, including alterations in pensions granted (whether temporarily or not) before the making of the alteration.

The powers conferred on the Secretary of State by this paragraph shall be in addition to and not in derogation of, any powers otherwise conferred on him by the said regulations and rules.

18. The fees of an actuary appointed at any time with the approval of the Secretary of State to make a report to the subscribers to, or beneficiaries under, any fund with respect to the position of that fund may to such extent as the Secretary of State deems proper be paid out of that fund.

Objection to Transfer.

19. At any time before the end of March 1937, or before the expiration of such longer period as may in special circumstances be allowed by the Secretary of State in any particular case or class of cases, any of the existing subscribers or beneficiaries may make a written objection to the Secretary of State to the vesting of the fund in which he is interested in the Commissioners.

20. In the case of any existing beneficiary who has not attained the age of twenty-one years or is of unsound mind, objection may be made as aforesaid on his behalf by his parent or guardian, or, as the case may be, by any person who satisfies the Secretary of State that he has by law authority to receive on behalf of the beneficiary any pension payable to him out of the fund:

Provided that where under section three hundred and thirty-five of the Lunacy Act, 1890, or any corresponding enactment in force outside England payments from the Fund are being made to an institution or person having the care of the beneficiary, then, if the Secretary of State is satisfied that there is no person who would apart from this proviso be entitled to make objection on behalf of the beneficiary, objection may be made as aforesaid on behalf of the beneficiary by

any person who satisfies the Secretary of State that he contributes towards the expense of maintaining the beneficiary.

21. In the case of any existing subscriber who is of unsound mind, objection may be made as aforesaid on his behalf by any person who satisfies the Secretary of State that he has by law authority to make such an objection on behalf of that subscriber or that he has by law authority to receive on behalf of the subscriber any pension payable to him out of the revenues of India:

Provided that where under section three hundred and thirty-five of the Lunacy Act, 1890, or any corresponding enactment in force outside England payments are being made from the revenues of India to an institution or person having the care of the subscriber, then, if the Secretary of State is satisfied that there is no person who would apart from this proviso be entitled to make objection on behalf of the subscriber objection may be made as aforesaid on behalf of the subscriber by his wife, or, if he has no wife, by, or as the case may be, by the guardian of any child of the subscriber who may become entitled to a pension from the Fund, (so, however, that no objection shall be made by, or by the guardian of any such child without the consent of, or, as the case may be, of the guardians of, the other children who may become entitled to pensions from the Fund).

22. Where any objection is duly made as aforesaid, subsection (3) of section two hundred and seventy-three of the Act shall have effect as from the first day of April, nineteen hundred and thirty-six, in relation to the interest of the person by whom or on whose behalf the objection is made, and any necessary adjustments shall be made as respects payments made by, to or in connection with that person on or after that date.

Temporary Adaptations and Modifications of section 273.

23. As respects the period preceding the commencement of Part III of the Act, section two hundred and seventy-three of the Act shall have effect subject to the following adaptations and modifications:—

(*a*) for the words "the Secretary of State", where they first occur in subsection (1), there shall be substituted the words "the Secretary of State in Council";

(*b*) any refenence in subsection (2) or subsection (3) to the Governor-General shall be construed as a reference to the Secretary of State in Council;

(*c*) the reference in paragraph (*a*) of subsection (3) to the revenues of the Federation shall be construed as a reference to the revenues of India;

(*d*) the reference in paragraph (*b*) of subsection (3) to the Secretary of State shall be construed as a reference to the Secretary of State in Council.

Miscellaneous.

24. This Order shall come into force on the date of the making thereof.

25. The date as from which, under subsection (1) of section two hundred and seventy-three of the Act, pensions payable under the Indian Military Service Family Pension Regulations and the Indian

Civil Service Family Pension Rules (being the pensions not heretofore payable out of any specific fund) are, subject to the provisions of subsection (3) of that section, to be payable out of the appropriate fund to be formed for the purposes of this Order and vested in Commissioners, shall be the date of the payment of the last instalment payable under paragraph ten of this Order; but the appropriate fund shall be debited with any payments of any such pension made before that date and after the end of March, nineteen hundred and thirty-six.

26. Anything to be done by or to the Secretary of State under this Order shall, until the commencement of Part III of the Act, be done by or to the Secretary of State in Council.

Interpretation.

27. The Interpretation Act, 1889, shall apply for the interpretation of this Order as it applies for the interpretation of an Act of Parliament, and subsection (6) of section two hundred and seventy-three of the Act shall apply with respect to this Order as it applies with respect to that section.

28. In this Order, except so far as the context otherwise requires, the expression "contributions" in relation to any of the funds includes references to any donation or fine payable under the rules or regulations relating to that fund, and references to subscribers or contributions to the funds include, in relation to the two funds directed to be formed by this Order, subscribers and contributions under the Indian Military Service Family Pension Regulations or, as the case may be, the Indian Civil Service Family Pension Rules.

29. References in this Order to the Secretary of State shall, as respects the period subsequent to the commencement of Part III of the Act, be construed as references to the Secretary of State acting with the concurrence of his advisers in accordance with the provisions of section two hundred and sixty-one of the Act.

M. P. A. Hankey.

E. CONRAN-SMITH,
Joint Secy. to the Government of India.

FINANCE DEPARTMENT (CENTRAL REVENUES).

NOTIFICATION.

INCOME-TAX.

New Delhi, the 27th March 1937.

No. 8.—In pursuance of sub-section (3) of section 5 of the Indian Income-tax Act, 1922 (XI of 1922), the Governor-General in Council is pleased to appoint Mr. K. C. Basak, I.C.S., to officiate as Commissioner of Income-tax, Punjab, North-West Frontier and Delhi Provinces, with effect from the afternoon of the 15th March 1937.

A. H. LLOYD,
Joint Secy. to the Govt. of India.

DEPARTMENT OF INDUSTRIES AND LABOUR.

NOTIFICATION.

New Delhi, the 23rd March 1937.

No. V-26.—In exercise of the powers conferred by sections 5 and 7 and sub-section (2) of section 8 of the Indian Aircraft Act, 1934 (XXII of 1934), and section 4 of the Indian Telegraph Act, 1885 (XIII of 1885)', and in supersession of the Indian Aircraft Rules, 1920, with the exception of Part IX thereof, the Governor General in Council is pleased to make the following rules, the same having been previously published, as required by section 14 of the former Act, namely:—

RULES.

PART I.—PRELIMINARY.

1. *Short title and extent.*—(1) These rules may be called the Indian Aircraft Rules, 1937.

(2) They apply (unless the contrary intention appears) to all aircraft for the time being in or over British India, provided that in the case of aircraft registered elsewhere than in British India, for the provisions of Parts IV, V, VI and IX of these rules relating to registration, licensing of personnel, airworthiness and log books there shall be substituted the regulations of the State in which the aircraft is registered.

2. *Nationality of aircraft.*—An aircraft shall be deemed to possess the nationality of the State on the register of which it is entered.

3. *Definitions and Interpretation.*—(1) In these rules, unless there is anything repugnant in the subject or context—

"Acrobatics" means any aerial manœuvres voluntarily accomplished other than those which are carried out in the course of normal flight;

"Aerial work aircraft" means aircraft used for an industrial or commercial purpose or any lucrative purpose other than public transport;

"Aerodrome" means any definite or limited ground or water area intended to be used, either wholly or in part, for the landing or departure of aircraft, and includes all buildings, sheds, vessels, piers and other structures thereon or appertaining thereto;

"Aerodrome light" means any light exhibited at an aerodrome for the purpose of assisting the navigation or manœuvres of an aircraft or of signalling to or from an aircraft;

"Aerodyne" means an aircraft, whose support in flight is derived dynamically from the reaction on surfaces in motion relative to the air, and includes all aeroplanes, helicopters, gyroplanes, gliders and kites;

"Aeroplane" means a mechanically driven aerodyne supported by aerodynamic reactions on surfaces remaining fixed under the same conditions of flight;

"Aerostat" means an aircraft supported in the air statically and includes all airships and balloons;

"Aircraft" means any machine which can derive support in the atmosphere from reactions of the air, and includes balloons whether fixed or free, airships, kites, gliders and flying machines;

"Airship" means a mechanically driven aerostat, having means of directional control;

"Balloon" means an aerostat, not provided with mechanical means of propulsion;

"Contracting State" means any state which is for the time being a party to the Convention relating to the Regulation of Aerial Navigation signed at Paris, October 13, 1919, with the additional Protocol, signed at Paris, May 1, 1920, and any amendment which may be made thereto under the provisions of Article 34 thereof;

"Course" means the forward direction of the intersection of the plane of symmetry (supposed vertical) of an aircraft with a horizontal plane. It is defined by the angle which it makes with a meridian of origin. By extension the angle itself;

"Export" means taking out of British India;

"Flying machine" means a mechanically driven aerodyne, and includes all aeroplanes, helicopters and gyroplanes;

"Glider" means an aerodyne supported in flight by aerodynamic reactions on surfaces remaining fixed under the same conditions of flight and not provided with mechanical means of propulsion;

"Government aerodrome" means an aerodrome which is maintained by or on behalf of Government;

"Import" means bringing into British India;

"Landing area" means that part of an aerodrome reserved for the departure or landing of aircraft;

"Making way": An aircraft is said to be "making way" when under way in the air or on the surface of the water, it has a velocity relative to the air or water respectively;

"Military aircraft" includes naval, military and airforce aircraft; and every aircraft commanded by a person in naval, military or airforce service detailed for the purpose shall be deemed to be a military aircraft;

"Normal flight" means flight comprising climbing, horizontal flight, turning and descending; provided, however, that it does not entail abrupt variations in height or in the attitude of the aircraft;

"On the surface of the water": An aircraft is deemed to be "on the surface of the water" so long as any portion of it is in contact with the water;

"Passenger aircraft", "mail aircraft" and "goods aircraft" means aircraft which effect public transport of passengers, mails or goods respectively;

"Personnel" in relation to any aircraft means the person in charge, pilot, navigator, engineer, and all other members of the crew;

"Private aircraft" means all aircraft other than aerial work aircraft or public transport aircraft;

"Prohibited area" means an area over which the navigation of aircraft is prohibited under rule 12.

"Public transport" means all carriage of persons or things effected by aircraft for a remuneration of any nature whatsoever, and all carriage of persons or things effected by aircraft without such remuneration if the carriage is effected by an air transport undertaking;

"Public transport aircraft" means an aircraft which effects public transport;

"State aircraft" includes military aircraft and aircraft exclusively employed in State service, such as posts, customs, police;

"Subsequent aircraft" means an aircraft which is constructed in accordance with the design and specification of a type of aircraft, which has been approved or accepted by the Governor General in Council for the issue of a certificate of airworthiness;

"Take off" includes all the successive positions of an aerodyne from the moment it moves from rest until the moment of starting normal flight;

"To land" is the action under normal conditions of making contact with the ground or a solid platform or water by an aircraft equipped for this purpose;

"Under way": An aircraft is said to be "under way" when, being in the air or on the surface of the water, it is not moored to the ground or to any fixed object on land or in the water;

"Under control": An aircraft is said to be "under control" when it is able to manœuvre as required by these Rules;

"Visible" as applied to lights means visible on a dark night with a clear atmosphere;

(2) Any power or duty conferred or imposed by these rules on the Governor General in Council may be exercised or discharged by the Governor General in Council or by any person authorised by him in that behalf.

PART II.—GENERAL CONDITIONS OF FLYING.

4. *Use and operation of aircraft.*—No person shall use or operate or assist in using or operating an aircraft save in accordance with these rules.

5. *Registration and nationality and registration marks.*—No person shall fly, or assist in flying any aircraft unless—

(*a*) it has been registered, and

(*b*) it bears its nationality and registration marks and the name and residence of the owner affixed or painted thereon in accordance with rule 37, or, in the case of aircraft registered elsewhere than in British India, in accordance with the regulations of the State in which it is registered:

Provided that the prohibition imposed by this rule shall not apply to aircraft flown in accordance with the special permission in writing of the Governor General in Council and subject to any conditions and limitations which may be specified in such permission.

6. *Licensing of personnel.*—Every aircraft shall carry and be operated by the personnel prescribed in Part V of these rules and such personnel shall be licensed in the manner prescribed in that Part:

Provided that in the case of aircraft not registered in British India, such personnel shall be licensed in accordance with the regulations of the State in which the aircraft is registered:

Provided further that this rule shall not apply to an aircraft flown by a person under instruction or undergoing tests for the purpose of obtaining or renewing a pilot's licence if—

(*a*) the aircraft is flown within 3 miles of a licensed aerodrome or a Government aerodrome,

(*b*) the aircraft carries no passengers, and

(*c*) prior notice of the flight and of the purpose of the flight is given to the person in charge of the aerodrome from which the flight is made.

7. *Documents to be carried in aircraft.*—(1) No person in charge of any public transport aircraft shall allow such aircraft to be flown unless the following documents are carried on board the aircraft, namely:—

(i) the certificate of registration,

(ii) the licences of the personnel,

(iii) the certificate of airworthiness,

(iv) the journey log book in cases where the keeping of a journey log book is prescribed in Part IX,

(v) the working copies of the aircraft and engine log books prescribed by Part IX, whenever the aircraft leaves its normal station,

(vi) where radio-telegraph apparatus is carried in the aircraft, the permit or licence issued by the Director-General of Posts and Telegraphs, under which such apparatus is carried:

Provided that where a licence or other document has been submitted to a competent authority under these Rules for renewal or other action that fact shall be deemed a valid excuse for its not being carried on board the aircraft.

(2) No person in charge of any aircraft engaged in international navigation shall allow such aircraft to be flown unless the following documents issued by the State in which the aircraft is registered are carried on board the aircraft, namely:—

(i) the certificate of registration,

(ii) the licences of the personnel,

(iii) the certificate of airworthiness,

(iv) the journey log book,

(v) the aircraft and engine log books,

(vi) where radio-telegraph apparatus is carried in the aircraft, the permit or licence for such apparatus,

(vii) where the aircraft carries passengers, a list of their names showing their places of origin and destination,

(viii) where the aircraft carries goods, air consignment notes and manifests in respect thereof.

8. *Carriage of explosives and arms.*—No person in, or in charge of, an aircraft shall carry or permit to be carried therein, any explosives, articles of a highly inflammable nature, arms, ammunition, or military stores other than:—

(*a*) such explosives or other articles as may be required for and are not kept for any other purpose than the working or handling of aircraft; and

(*b*) subject to the provisions of the Indian Arms Act, 1878, and the rules made thereunder, and subject to such further restrictions as may be imposed by the owner of the aircraft regarding their carriage, such arms and ammunition as may reasonably be required for the private use of any person, either as personal luggage or as freight:

Provided that such explosives, articles, arms and ammunition, when carried in a passenger aircraft, shall be placed in a receptacle or receptacles not accessible to the passengers.

9. *Radio-telegraph Apparatus.*—(1) No person shall operate radio-transmitting apparatus in any aircraft registered in British India unless he holds a licence of the type required by the provisions of Part V in respect of aircraft required or permitted by these rules to carry radio-telegraph or radio-telephone apparatus as the case may be, and issued in accordance with those provisions.

(2) Radio-transmitting apparatus carried in aircraft shall be operated under the conditions defined by the International Tele-communication Convention (Madrid 1932) and the general radio communication regulations annexed thereto as far as these apply and shall be operated only during the hours in which such operation is permitted by the Governor General in Council.

(3) Aircraft registered in British India and required or permitted by these rules to carry radio-telegraph apparatus shall be fitted with such apparatus in accordance with the provisions of Part VII.

(4) Nothing in this rule shall exempt any person from those provisions of the Indian Telegraph Act, 1885, and the rules made thereunder which require that radio-telegraph apparatus shall be licensed.

10. *Mails.*—No person shall carry mails or allow mails to be carried in any aircraft except with the consent in writing of the Director-General of Posts and Telegraphs.

11. *Aerodromes.*—(1) No pilot or person in charge of any aircraft carrying passengers for hire or reward shall use any place for a series of landings and departures, and no pilot or person in charge of any aircraft employed on a scheduled air transport service, shall use any place as a regular place of landing or departure other than an aerodrome licensed or approved for the purpose in accordance with the provisions of Part XI.

(2) No person being the proprietor of an aerodrome other than an aerodrome mentioned in sub-rule (1) shall permit the aerodrome to be used in contravention of that sub-rule.

(3) No person other than the occupant of an aircraft manœuvring in accordance with these rules may enter upon the landing area of an approved or licensed aerodrome without the consent of the person in charge of the aerodrome.

12. *Prohibited areas.*—(1) No person shall fly or assist in flying an aircraft over any of the areas specified in Schedule I save in accordance with the conditions specified in that Schedule.

(2) Every pilot, who, when flying an aircraft, finds himself above a prohibited area in contravention of sub-rule (1), shall, as soon as he is aware of the fact, give the signal of distress specified in sub-rule (2) of rule 107, and shall land the aircraft as soon as possible outside the prohibited area at one of the nearest aerodromes in British India:

Provided that he shall not, unless compelled by stress of weather or other unavoidable cause, fly further into the prohibited area nor commence to descend while still above the prohibited area.

(3) When the signals prescribed in rule 111 are given, the pilot of the aircraft shall immediately change his course and fly away from the prohibited area.

(4) When the signals prescribed in rule 110 are given, the pilot shall immediately give the signal referred to in sub-rule (2) of this rule and land the aircraft in accordance with that sub-rule.

13. *Photography from aircraft.*—No person shall take, or cause or permit to be taken from an aircraft any photograph of a prohibited area or of any part thereof, or of any object therein.

14. *Aerial work and public transport reserved for certain aircraft.*—No aircraft registered in accordance with Part IV in Category B shall be used as an aerial work aircraft or as a public transport aircraft.

Provided that the Governor General in Council may from time to time permit, and impose restrictions on the performance of aerial work or public transport by aircraft other than those registered in accordance with Part IV in Category A, and such restrictions shall be

deemed to have been effectively imposed if they have been notified in writing to the owner or operator of such aircraft or by notification in the *Gazette of India*.

15. *Conditions to be complied with by aircraft in flight.*—No aircraft engaged in international navigation, passenger aircraft, goods aircraft or mail aircraft, and no aircraft let out for hire for the purpose of being flown by the hirer, shall be flown unless the following conditions are complied with, namely:—

(i) the aircraft shall be certified as airworthy and shall be maintained in airworthy condition in accordance with the provisions of Part VI or (in the case of an aircraft not registered in British India) in accordance with the regulations of the State in which the aircraft is registered;

(ii) all the terms or conditions on which the certificate of airworthiness was granted shall be duly complied with;

(iii) the aircraft shall carry on board its certificate of airworthiness and any other certificates prescribed by Part VI, or by the regulations of the State in which the aircraft is registered which it is required to carry on board. The certificate of airworthiness shall be carried in the pocket of the journey log book;

(iv) the aircraft shall be fitted with and shall have in working order such instruments and equipment as are prescribed in Part VI for an aircraft of that class or description:

Provided that the Governor General in Council may, by order in writing and subject to such conditions as may be contained in the order, exempt any aircraft from the operation of this rule.

Explanation.—For the purpose of this rule, aircraft let out on payment for instructional or other purposes by a flying club or flying school to a member or pupil thereof shall be deemed to be let out for hire.

16. *Rules of the Air.*—Every pilot and navigator shall observe, and every person in charge of an aircraft shall cause to be observed, all the rules of the air contained in Part XII, and shall take all such steps as are practicable to secure that when the aircraft is in flight or is being manœuvred on the land or water, the windows, wind screens or side screens of the aircraft through which the pilot obtains his view forward or sideways are maintained in such condition as not to obscure his view.

17. *Production of licences, etc.*—Any licence, certificate, log book or document granted or required to be maintained under these rules shall, on demand, for the purpose of inspection, by any magistrate, any police officer above the rank of constable, any Customs-officer, any commissioned officer of His Majesty's naval, military or air forces, any non-commissioned officer of the Royal Air Force, any gazetted officer of the Civil Aviation Department, or any other person authorised by the Governor General in Council by special or general order in writing in this behalf, be produced by the licensee or, in the case of an aircraft or of a licensed aerodrome, by the owner, hirer or person in charge thereof:

Provided that any such licence, certificate, log book, or document relating to an aircraft or its personnel which is not by these Rules required to be carried in the aircraft shall be produced within seven days of the making of the demand.

18. *Prevention of flights in contravention of the rules.*—(1) An authority authorised under Section 8 of the Indian Aircraft Act, 1934, to detain aircraft may do so by the issue of a written direction to the pilot or other person for the time being in charge of the aircraft to be detained, or by taking such other steps as may be necessary to make the detention effective. If an aircraft detained by a person so authorised is housed or kept at a Government aerodrome the housing or picketing charges normally applicable shall be payable in respect of the whole period during which it is detained.

(2) Any person acting in contravention of any direction given under this rule shall, without prejudice to any other penalty he may incur, be deemed to have acted in contravention of these Rules.

19. *Cancellation, suspension or endorsement of licences and certificates.*—(1) Where any person is convicted of a contravention of or failure to comply with these rules in respect of any aircraft the Governor General in Council may cancel or suspend any certificate of registration granted under these Rules relating to that aircraft.

(2) The Governor General in Council may cancel or suspend any certificate relating to the airworthiness of an aircraft granted under these Rules if he is satisfied that reasonable doubt exists as to the safety of the aircraft in question or of the type to which the aircraft in question belongs and may vary the conditions attached to any such certificate if he is satisfied that those conditions may properly be relaxed or that reasonable doubt exists whether those conditions afford a sufficient margin of safety.

(3) The Governor General in Council may for reasons which shall be recorded in writing cancel, suspend or endorse any certificate or licence granted under these Rules if he is satisfied that there is sufficient ground for so doing and may suspend any such certificate or licence temporarily during the investigation of any matter forming a ground for action under this sub-rule.

(4) The Governor General in Council may cancel or vary any particulars entered by him or under his authority in any licence or certificate granted or in any journey log book issued under these Rules.

(5) The Governor General in Council may require the holder of any licence, certificate or other document granted or issued under these rules or any person having possession or custody of such licence, certificate or document to surrender the same to him for cancellation, suspension, endorsement or variation and any person failing to comply with any such requirement within a reasonable time shall be deemed to have acted in contravention of these Rules.

20. *Certain rules not applicable to gliders and kites.*—Rules 5, 6, 7, 12, 15, 17, 19 and 25 shall not apply to gliders, and rules 5, 6, 7, 12, 15, 17, 19 and the rules in Part III, with the exception of rule 26 in so far as it relates to the dropping of articles from aircraft, shall not apply to kites.

PART III.—GENERAL SAFETY CONDITIONS.

21. *Dangerous flying.*—No person shall fly any aircraft in such circumstances as, by reason of low altitude or proximity to persons or dwellings or for any other reason, to cause unnecessary danger to any person or property.

22. *Flying over cities, etc.*—No pilot shall fly any aircraft, and no person in charge of any aircraft shall allow it to be flown over any city, town, village site or other populous area except at such altitude, which in no case shall be less than 1,000 feet, as will enable the aircraft to land outside the city, town, village site or other populous area in the event of an emergency:

Provided that this prohibition shall not apply within a distance of one mile from a licensed aerodrome or a Government aerodrome.

23. *Acrobatics.*—(1) No person shall use any aircraft for acrobatics—

(*a*) when flying over any city, town, village site or populous area; or

(*b*) when flying over any meeting for public games or sports or other public assembly, except where a request for such flying has been made in writing by the promoters of such meeting or assembly.

(2) When an aircraft is used for acrobatics—

(*a*) it shall be flown by a licensed pilot, or, if it is flown by a person for the purpose of qualifying for a licence under these Rules, such person shall be accompanied by a licensed pilot instructor;

(*b*) if passengers are carried, whether the carriage is public transport or not, their previous consent to the performance of acrobatics shall be obtained in writing;

(*c*) the pilot or person in charge of the aircraft shall satisfy himself before commencing the flight that every person carried in the aircraft, is properly secured by safety belts; and

(*d*) the acrobatics shall be concluded at a height above the ground not less than 2,000 feet, or such lower altitude as the Governor General in Council may permit by special order in writing.

24. *Prohibition of intoxicated persons entering aircraft.*—No person acting as, or carried in an aircraft for the purpose of acting as, pilot, commander, navigator, engineer or operating member of the crew thereof, shall, while so acting or carried, be in a state of intoxication or in a state in which, by reason of his having taken or used any sedative, narcotic or stimulant drug or preparation, his capacity so to act is impaired; and no other person while in a state of intoxication shall enter or be in any aircraft.

25. *Smoking in aircraft.*—(1) The owner of every aircraft registered in British India which is provided with a certificate of airworthiness shall cause to be exhibited in a prominent place in the aircraft a notice stating where and to what extent smoking is prohibited or permitted therein.

(2) A notice permitting smoking in such aircraft may be exhibited therein only if smoking in the aircraft is permitted by the certificate of airworthiness of the aircraft or by the direction of the Governor General in Council and only in accordance with the conditions relating to smoking contained in such certificate or direction.

(3) No person shall smoke in any aircraft registered in British India which is provided with a certificate of airworthiness unless a notice permitting smoking is exhibited in the aircraft, and any person smoking shall comply with all the terms of such notice.

26. *Parachute descents and dropping of articles.*—No person shall, except in a case of emergency, descend by means of a parachute from an aircraft and no person shall drop or cause or permit to be dropped from an aircraft any article, whether attached to a parachute or not, unless the descent is made or the article is dropped in accordance with and subject to any conditions or limitations contained in a general or special order of the Governor General in Council in writing in that behalf:

Provided that nothing in this rule shall be deemed to prevent the dropping of—

(*a*) ballast which is not prohibited by the provisions of Rule 114;

(*b*) message bags, smoke producing or other apparatus or materials dropped for the purpose of navigating an aircraft or communicating messages from an aircraft, subject to the observance of such precautions as to the nature of the articles dropped and the place of dropping as will avoid risk of injuring persons or property on the ground;

(*c*) separate sheets of paper containing printed matter in any place if the written permission of the District Magistrate or, in a Presidency town or Rangoon, of the Commissioner of Police is first obtained in each case.

27. *Carriage of persons in unauthorised parts of aircraft.*—No person shall at any time be carried on the wings or undercarriage of the aircraft, or on or in any other part thereof which is not designed for the accommodation of the personnel or passengers, or on or in anything attached externally to the aircraft:

Provided that—

(*a*) nothing in this rule shall prevent a person having temporary access—

(i) to any part of the aircraft for the purpose of executing repairs to the aircraft or adjusting the machinery or equipment thereof or for the purpose of doing anything which may be necessary for the safety of the aircraft or persons or goods carried therein; or

(ii) to any part of the aircraft in which goods or stores are being carried and to which proper means of access is provided; and

(*b*) a person may be carried on or in any part of the aircraft, or anything attached thereto, with the permission in writing of the Governor General in Council and subject to any conditions which may be specified in such permission.

28. *Prohibition on persons under seventeen having sole control of aircraft.*—No person, being under seventeen years of age, shall have sole control of an aircraft in motion, and no person shall cause or permit any other person to have sole control of an aircraft in motion unless he knows or has reasonable cause to believe such other person to have attained the age of seventeen years.

29. *Acts likely to imperil the safety of aircraft.*—No person shall interfere with the pilot or with a member of the operating crew of an aircraft, or tamper with the aircraft or its equipment or conduct himself in a disorderly manner in an aircraft or commit any act likely to imperil the safety of an aircraft or its passengers or crew.

PART IV.—REGISTRATION AND MARKING OF AIRCRAFT.

30. *Certificate of Registration.*—(1) The authority empowered to register aircraft and to grant certificates of registration in British India shall be the Governor General in Council.

(2) An aircraft may be registered in British India in one or other of the following Categories, namely—

(*a*) *Category A.*—if the aircraft is wholly owned either—

(i) by British subjects or persons under His Majesty's protection, or

(ii) by a company or corporation registered within and having its principal place of business within His Majesty's dominions; and

(*b*) *Category B.*—if the aircraft is wholly owned either—

(i) by persons, resident in or carrying on business in British India, who are not British subjects nor persons under His Majesty's protection, or

(ii) by a company or corporation registered elsewhere than within His Majesty's dominions and carrying on business in British India.

(3) No aircraft in respect of which the conditions required in sub-rule (2) are not satisfied, and no aircraft which is already validly registered in another country shall be registered in British India.

31. *Nature of application.*—(1) Every application for a certificate of registration shall be accompanied by—

(*a*) such particulars relating to the aircraft as may be required;

(*b*) the fee prescribed in rule 35, which fee shall be returned if the application is not granted;

(*c*) in the case of aircraft imported by air, a certificate signed by a Chief Customs-Officer or Customs-Collector that the customs duty leviable in respect of it has been paid. Such certificate shall state the type and manufacturer's number of the aircraft and engine, and if the aircraft has been registered elsewhere, its registration markings.

(2) An applicant for a certificate of registration may be required to produce proof of the truth of the statements contained in his application.

32. *Aircraft imported by air.*—When an application is made for the registration of an aircraft before its import into India for the purpose of the import of the aircraft by air, a temporary certificate of registration will, subject to the conditions of sub-rule (3) of rule 30, be granted by the Governor General in Council on the owner of the aircraft complying with clauses (*a*) and (*b*) of sub-rule (1) of rule 31. Such temporary certificate shall be valid only until the first landing of the aircraft at a Customs aerodrome in British India, when the certificate shall be delivered by the pilot or other person in charge to the local Aerodrome Officer. Thereafter, on production by or on behalf of the owner of the aircraft of the certificate mentioned in clause (*c*) of sub-rule (1) of rule 31, the certificate of registration shall be granted by the Governor General in Council:

Provided that if an aircraft in respect of which a temporary certificate of registration has been issued is imported otherwise than by air, such temporary certificate shall cease to be valid on the date of import of the aircraft, and the temporary certificate shall forthwith be delivered by the owner to the Director of Civil Aviation in India, and thereafter the certificate of registration shall be granted by the Governor General in Council.

33. *Change in ownership.*—In the event of any change in the ownership of a registered aircraft, or if a registered aircraft ceases to be owned wholly either by persons or by a company or corporation fulfilling the conditions set out in rule 30, then—

(1) the registered owner of the aircraft shall forthwith notify the Director of Civil Aviation in India of such change of ownership or, as the case may be, that the aircraft has ceased to be so owned as aforesaid; and

(2) the registration and the certificate thereof shall lapse as from the date of such change of ownership, or the date on which the aircraft ceased to be so owned.

34. *Aircraft destroyed or withdrawn from use.*—When a registered aircraft has been destroyed or permanently withdrawn from use, the registered owner shall as soon as possible notify the Director of Civil Aviation in India accordingly, and the registration and the certificate thereof shall lapse as from the date of such notification.

35. *Registration Fees.*—A fee of twenty rupees shall be payable in respect of a certificate of registration:

Provided that, where the aircraft has been previously registered in British India and the Governor General in Council is satisfied—

(*a*) that the certificate of registration last issued in respect of the aircraft has lapsed by reason of the sale of the aircraft by the registered owner; and

(*b*) that the registered owner of the aircraft immediately before the sale was the constructor thereof or a dealer in aircraft; and

(c) that the aircraft has not been flown since a certificate of registration was last issued in respect thereof, except for the purpose of—

(i) an experiment or test carried out in the ordinary course of construction or in order to obtain a certificate of airworthiness; or

(ii) a demonstration to a prospective purchaser; or

(iii) delivering the aircraft to a purchaser;

a fee of rupees four only shall be payable.

36. *Register of Aircraft.*—The register of aircraft registered in India shall be open to inspection by members of the public at such times and subject to such conditions as may be specified by the Director of Civil Aviation in India.

37. *Nationality and Registration Marks: how to be affixed.*—(1) The nationality mark of an aircraft registered in India shall be the capital letters VT in Roman characters, and the registration mark shall be a group assigned by the Governor General in Council of three capital letters in Roman characters.

(2) The nationality and registration marks shall be painted on the aircraft in the following manner:—

(a) *Aerostats.*—In the case of airships the marks shall be painted near the maximum cross-section so as to appear on both sides and on the upper surface equidistant from the letters on the sides.

In the case of balloons the marks shall appear twice near the maximum horizontal circumference of a spherical balloon and shall be placed as far as possible from one another and, on a non-spherical balloon, near the maximum cross-section on both sides immediately above the rigging band on the points of attachment of the basket suspension cables.

In the case of all aerostats, the side marks shall be visible both from the sides and from the ground.

(b) *Aeroplanes.*—The marks shall be painted once on the lower surface of the main plane structure and once on the upper surface of the main plane structure, the top of the letters to be towards the leading edge. They shall also be painted along each side of the fuselage or of the body between the main planes and the tail planes.

The marks shall be painted on each side of the fuselage or of the body.

(c) *Other aerodynes.*—The provisions of clause (b) shall be applicable to other aerodynes in so far as the latter comprise corresponding elements on which marks could be placed.

(3) The marks shall be of such a colour in relation to the colour of the background on which they are painted as will render them clearly legible at a distance of not less than 250 yards in a clear atmosphere.

(4) The height of the letters of the nationality and registration marks need not exceed eight feet. Subject as aforesaid, the height of the marks shall be as follows:—

(a) *Aerostats.*—In the case of airships the height of the marks shall be equal to at least one-twelfth of the perimeter of the airship at the maximum cross-section.

In the case of balloons the height of the marks shall be equal to at least one-fifteenth of the maximum horizontal circumference of a spherical balloon and to at least one-twelfth of the perimeter of a non-spherical balloon at the maximum cross-section.

(b) *Aeroplanes.*—The marks to be borne on the wings and the fuselage or body shall, as regards each group of marks, be formed of letters of equal height, as large as possible without however touching the visible outline of the wings, fuselage or body.

(c) *Gyroplanes.*—The marks to be borne on the fuselage or body shall, as regards each group of marks, be formed of letters of equal height, as large as possible without however touching the visible outline of the fuselage or body.

(d) *Other aerodynes.*—The provisions of clause (b) shall be applicable to other aerodynes in so far as the latter comprise corresponding elements on which marks could be placed.

(5) As nearly as the constructional features of the aircraft admit—

(a) the width of the letters shall be two-thirds of their height;

(b) the thickness of the letters shall be one-sixth of their height; and

(c) except as provided in sub-rule (6) a space equal to one-half the width of the letters shall be left between the letters.

The letters shall be painted in plain block type and shall be uniform in shape and size.

(6) A hyphen of a length equal to the width of one of the letters shall be painted between the nationality mark and the registration mark.

(7) The nationality and registration marks shall be displayed to the best possible advantage, taking into consideration the constructional features of the aircraft. The marks shall always be kept clean and visible.

(8) The aircraft shall carry affixed to the car or basket or to the fuselage, in a prominent position, a metal plate which shall be of stainless steel and shall be inscribed with the names and residence of the owner and the marks of nationality and registration.

PART V—PERSONNEL OF AIRCRAFT.

38. *Personnel to be carried in flying machines.*—Subject to the provisions of rule 6, every flying machine registered in British India shall comply with such of the following requirements in respect of the

personnel which it carries and by which it is operated as are applicable to the class of flying machine to which it belongs:—

(1) *Private pilot.*—Every private flying machine shall be flown by a person holding a Private Pilot's licence ("A" licence) or a Public Transport Pilot's licence ("B" licence) issued in accordance with sub-rules (1) and (3) respectively of rule 41:

Provided that a flying machine, which is carrying a passenger or passengers other than a person licensed to give instruction in flying in accordance with sub-rule (3) of this rule, may not be flown by a person holding only a Private Pilot's licence ("A" licence) unless he has had not less than 25 hours solo flying experience, has a certificate from a licensed pilot instructor that he is considered sufficiently qualified for the purpose and has previously flown a flying machine of the same type and has satisfactorily completed 3 landings and 3 take-offs therein.

(2) *Public Transport or aerial work pilot.*—Every public transport or aerial work flying machine shall be flown by a person holding a Public Transport Pilot's licence ("B" licence) issued in accordance with sub-rule (3) of rule 41:

Provided that within British India, such flying machine, when flying by day and when not employed on a regular scheduled air service may be flown by a person holding an "A" licence which has been specially endorsed in accordance with sub-rule (2) of rule 41 ("A-1" licence):

Provided further that such flying machine may be flown at any time or place within British India by the holder of a "B" licence or of an "A-1" licence if the holder of a "B" licence endorsed for the particular type of flying machine is in the cockpit and is able to take control of the flying machine:

Provided further that a flying machine, the property of or being used by a duly constituted flying club, carrying a member of the club otherwise than for the purpose of instructing such member in flying, shall not, for the purpose of this rule, be deemed to be flown for public transport notwithstanding that payment may be made to the flying club for such carriage, unless payment is made either directly or indirectly to the pilot of the flying machine or the pilot of the flying machine is a paid employee of the flying club in which case the aircraft shall be deemed to be flown for public transport.

(3) *Pilot instructor.*—Every flying machine which is being used for the purpose of giving instruction in piloting shall carry, except when flown solo by a pupil under instruction, a person holding a "B" licence, which has been specially endorsed for instructional purposes in accordance with sub-rule (4) of rule 41, and no other person may impart, for a remuneration of any nature whatsoever, instruction in piloting flying machines:

Provided that the holder of a "B" licence which has not been so endorsed may, when acting as assistant to a licensed pilot

instructor, impart such instruction but shall in no case authorise a person under instruction to perform his first solo flight nor give instruction in any form of aerobatics.

Explanation.—A person acting as assistant to a licensed pilot instructor shall not be deemed to have ceased to be so acting by reason only of the absence of the pilot instructor, if such absence does not exceed seven consecutive days, but, where such absence exceeds seven consecutive days, he shall not continue so to act without a written authorisation from the Governor General in Council.

(4) *Second Class Navigator.*—Every flying machine used for international public transport and having to fly without landing—

(i) by day, more than 100 miles over inhabited regions, or more than 100 miles but not more than 600 miles entirely over the high seas or uninhabited regions, or

(ii) by night, more than 15 miles but not more than 600 miles, shall have on board a navigator holding a first class navi-class navigator's licence.

(5) *First Class Navigator.*—Every flying machine used for international public transport and having to fly without landing—

(i) by day, more than 600 miles entirely over the high seas or uninhabited regions, or

(ii) by night, more than 600 miles,

shall have on board a navigator holding a first class navigator's licence.

(6) *Pilot or other member of crew as Navigator.*—(*a*) In either of the following cases, namely—

(i) when the pilot of a flying machine, required by sub-rule (4) or sub-rule (5) of this rule to carry a navigator, himself holds a navigator's licence of the required class and there is on board a second pilot capable of flying the machine in case of need,

(ii) when there is on board such flying machine a member of the crew additional to the pilot who holds such navigator's licence,

a navigator shall not be required to be carried in addition to such pilot or member of the crew.

(*b*) When the pilot of a flying machine, required by sub-rule (4) or sub-rule (5) of this rule to carry a navigator, himself holds a navigator's licence of the required class but there is on board no second pilot capable of flying the machine in case of need, a navigator holding a licence of the required class shall be carried in addition to the pilot except in the case of—

(i) night flights over routes suitably marked and recognised as such by the competent authorities,

(ii) day flights over inhabited regions,

(iii) day flights of not more than six hundred miles over the high seas or uninhabited regions.

(7) In sub-rules (4), (5) and (6) of this rule—

(i) "uninhabited region" means a region where, in consequence of the sparsity of the population, and of the absence of natural landmarks or of the insufficiency of the maps, the difficulties of navigation are similar to those met with over the high seas;

(ii) "night" means the period commencing one hour after sunset and terminating one hour before sunrise;

(iii) "flight over the high seas" means a flight in the course of which an aircraft finds itself over the sea at a distance of more than 50 miles from the nearest point of the coast.

(8) *Radio-telegraph Operator's Licence.*—An aircraft which is required by these Rules to carry radio-telegraph apparatus shall carry, in addition to the pilot and whether or not it participates in the international service of public correspondence, a person holding either a first class or a second class radio-telegraph operator's licence issued in accordance with this Part to operate radio-telegraph apparatus on aircraft.

(9) *Radio-telephone Operator.*—An aircraft which is required by these Rules to carry radio-telegraph apparatus and which communicates by radio-telephony, shall carry a person holding a first class radio-telegraph operator's licence:

Provided that an aircraft, which carries radio-telephone apparatus and which communicates solely by radio-telephony, may carry, instead of a person holding a first class radio-telegraph operator's licence, a radio-telephone operator licensed in accordance with this Part to operate radio-telephone apparatus on aircraft.

39. *Licensing authority.*—The authority by which the licences referred to in rule 38 may be granted, renewed or varied shall be the Governor General in Council who may withhold the grant or renewal of a licence if for any reason he considers it desirable to do so.

40. *Signature of licence holder.*—On the issue of a licence to an applicant he shall forthwith sign his name on the licence as the holder thereof with his ordinary signature.

41. *Proofs of competency.*—Applicants for licences shall be required to produce proofs of having the following practical experience and of having passed satisfactorily the following tests and examinations:—

(1) *Private Pilot's Licence ("A" Licence).*—Flying Experience, Flying Tests, Technical Examination and Medical Examination as laid down in Section A of Schedule II:

Provided that for the purpose of the grant of such licence:—

(*a*) A person who is qualified as a Royal Air Force Pilot may be exempted from the flying tests and may be exempted

from the medical examination on production of a certificate from a Royal Air Force Medical Officer that he is fit for flying duties and is up to the standard required for an "A" licence;

(*b*) A person to whom a licence of a corresponding or higher class has been granted by the competent authority in a contracting State may be exempted from all or any of the flying tests and from subjects (*a*) and (*b*) of the technical examination, and may, if he is the holder of a current licence, be exempted from the medical examination;

(*c*) A licence may be issued for all types of flying machines or endorsed for one or more types only.

(2) *Pilot's licence endorsed for limited transport of goods and passengers within India ("A-I" Licence).*—Flying Experience, Flying Tests, Technical Examination and Medical Examination as laid down in Section B of Schedule II:

Provided that for the purpose of the grant of such licence—

(*a*) a person who is qualified as a Royal Air Force Pilot may be exempted from the flying tests and from the technical examination on flying machines, engines, instruments and elementary navigation, specified in Section B of Schedule II; and an examination by a Royal Air Force Medical Officer at which the candidate was passed fit for full flying duties may be accepted in lieu of the medical examination;

(*b*) the requirements in respect of flying experience may be varied by the Governor General in a case where the flying experience of the applicant is in the opinion of the Governor General in Council substantially the equivalent of the flying experience specified in Section B of Schedule II;

(*c*) such licence shall be endorsed for such types of flying machine only as the candidate has produced proof of his competence to fly.

(3) *Public Transport Pilot's Licence ("B" Licence).*—Flying Experience, Flying Tests, Technical Examination and Medical Examination as laid down in Section C of Schedule II:

Provided that for the purpose of the grant of such licence—

(*a*) a person who is qualified as a Royal Air Force Pilot may be exempted from the flying tests (but not from any of the required flying experience) and from the technical examination on flying machines, engines and instruments specified in Section C of Schedule II; and an examination by a Royal Air Force Medical Officer at which the candidate was passed fit for full flying duties may be accepted in lieu of the medical examination;

(*b*) a person to whom a licence of a corresponding class has been granted by the competent authority in any one of

His Majesty's dominions may be exempted from all or any of the flying tests, and from subjects (*a*) to (*e*) and (*g*) of the technical examination, and may, if he is the holder of a current licence, be exempted from the medical examination;

(*c*) the requirements in respect of flying experience may be varied by the Governor General in Council in a case where in his opinion the flying experience of the applicant is substantially the equivalent of that specified in Section C of Schedule II;

(*d*) such licence shall be issued for such types of flying machine only as the candidate has produced proof of his competence to fly, provided that for industrial purposes, other than public transport, a licence may be issued for any or all types of flying machines.

(4) *Public Transport Pilot's Licence, endorsed for instructional purposes (Pilot Instructor's Licence).*—Flying Experience, Flying Tests, Technical Examination and Medical Examination as laid down in Section D of Schedule II.

(5) *Navigator's Licence, 1st class and 2nd class.*—Flying Experience, Technical Examination and Medical Examination as laid down in Section E of Schedule II:

Provided that for the purpose of the grant of such licences a person to whom a licence of a corresponding class has been granted by the competent authority in any one of His Majesty's dominions, may be exempted from the technical examination and may, if he is the holder of a current licence, be exempted from the medical examination.

(6) *Radio-telegraph Operator's Licences*—

(*a*) *First Class Licence*—

Flying Experience and Medical Examination.—As laid down in Section F of Schedule II.

Technical Qualifications.—The candidate must be the holder of a first class certificate of competency as a wireless operator issued by the Director-General, Posts and Telegraphs, India, or of such other certificate of proficiency as a wireless operator as may be accepted by the Director-General of Posts and Telegraphs in lieu thereof.

(*b*) *Second Class Licence*—

Flying Experience and Medical Examination.—As laid down in Section F of Schedule II.

Technical Qualifications.—The candidate must be the holder of a second class certificate of competency as a wireless operator issued by the Director-General of Posts and Telegraphs, India, or of such other certificate of proficiency as a wireless operator as may be accepted by the Director-General of Posts and Telegraphs, India, in lieu thereof.

(c) *Radio-telephone Operator's Licence*—

Flying Experience and Medical Examination.—As laid down in Section F of Schedule II.

Technical Qualifications.—The candidate must be the holder of a certificate of proficiency as radio-telephone operator issued by the Director-General of Posts and Telegraphs, India, which has been specially endorsed for air operations, or of such other certificate of proficiency as a radio-telephone operator as may be accepted by the Director-General of Posts and Telegraphs, India, in lieu thereof:

Provided that a candidate for a radio-telegraph operator's licence who has not had the required air experience may be granted a provisional licence for a period not exceeding one year in order to enable him to acquire the necessary air experience.

42. *Periods of validity of licences.*—(1) The licences may be granted, and on each occasion of renewal may be renewed, for any period not exceeding the periods shown below:—

(a) Pilot's "A" Licence.—Twelve months.

(b) Pilot's "A-1" Licence.
(c) Pilot's "B" Licence.
(d) Pilot Instructor's Licence.
} Six months in the case of a licence granted to a male. Four months in the case of a licence granted to a female.

(e) Navigator's Licence.—Twelve months.

(f) Radio-telegraph Operator's Licence.—Twenty-four months.

(2) The holder of a licence shall, in any one of the following circumstances, be required to undergo a fresh medical examination, wholly or in part, and to produce a certificate of medical fitness as a condition of the licence remaining valid, namely:—

(i) in the event of sickness involving incapacity for a period of twenty days or more for the work for which he is licensed; or

(ii) in the event of an accident occurring otherwise than during the performance of such work and involving the same incapacity; or

(iii) in the event of an accident occurring during the performance of such work and involving injury; or

(iv) if the holder of a licence has performed a total of 125 hours' flying in the capacity of pilot of a flying machine within any period of thirty consecutive days since his last medical examination under these Rules.

43. *Renewal of licences.*—Licences may be renewed for the periods specified in rule 42 on production of proof of recent flying experience and after the passing of the medical examination as laid down in Schedule II:

Provided that in the case of a member of the operating crew of an aircraft engaged in public transport or aerial work, who is on duty

in a region distant from official medical centres, the medical examination may exceptionally at the discretion of the Governor General in Council, be deferred for two consecutive periods of three months each on condition that such member obtains locally in each case and forwards to the Director of Civil Aviation in India a favourable medical certificate furnished by a medical practitioner who possesses qualifications entitling him to inclusion in the Medical Register of Great Britain:

Provided further that the holder of any licence may be required before the renewal of the licence to satisfy all or any of the requirements which are applicable on the first grant of a licence of the same class:

Provided further that in the case of a pilot's licence the Governor General in Council may, when renewing the licence restrict the types of aircraft for which the licence is endorsed to those on which he is satisfied that the holder of the licence has had recent reasonable flying experience.

44. *Aircraft not registered in British India.*—An aircraft not registered in British India shall carry the personnel prescribed by the laws of the State in which it is registered and such personnel shall be licensed in accordance with the laws of that State.

45. *Validation of foreign licences.*—When a licence has been granted by the duly competent authority in any part of His Majesty's dominions outside British India or in any foreign State and is for the time being in force the Governor General in Council may, subject to such conditions and limitations and for such periods as he shall think fit, confer on such licence the same validity for the purpose of flying aircraft registered in British India as if it had been granted under these Rules and a licence so validated shall be subject to the provisions of rule 19.

46. *Renewal, variation or validation of licences outside British India.*—If a licence granted under these rules is varied or renewed in conformity with the provisions of these rules, or if a licence is validated for the purpose of flying aircraft registered in British India in conformity with the provisions of rule 45, by an authority outside British India specified by the Governor General in Council in this behalf, such variation, renewal or validation shall have effect in British India as though the licence had been varied, renewed or validated by a person authorised in this behalf under sub-rule (2) of rule 3.

47. *Age of applicants.*—Licences shall not be granted to applicants who at the time of qualification do not comply with the following conditions:—

(*a*) An applicant for a Pilot's "A" Licence shall have attained the age of 17 years.

(*b*) An applicant for a Pilot's "A-1" Licence or for a Pilot's "B" Licence shall have attained the age of 19 years and shall not be more than 45 years of age.

(*c*) An applicant for a Navigator's Licence shall have attained the age of 19 years and shall not be more than 50 years of age.

(*d*) An applicant for a Radio-telegraph Operator's Licence shall have attained the age of 19 years:

Provided that, at the discretion of the Governor General in Council, a relaxation may be made as regards the upper age-limit:—

(i) in the case of an applicant for a Pilot's "A-1" Licence or for a Pilot's "B" Licence, if before the date of his application he has been in service as pilot of a State flying machine, or

(ii) in the case of an applicant for a navigator's licence, if up to the date of his application he has been in service as an operative member of the crew of an aircraft.

48. *Fees.*—(1) The following fees shall be payable in respect of the issue, validation or renewal of licences or the issue of duplicate licences and the tests and examinations laid down in Rules 41 to 43:—

Fees.

—	Flying Test.	Official Technical Examination (if required).	Official Medical Examination.		Licence.
			For issue of licence.	For renewal of licence or if required under sub-rule (2) of rule 42.	
		Rs.	Rs.	Rs.	Rs.
Pilot's "A" Licence ..	*	5	16	8	5
Pilot's "A-1" Licence ..	*	20	32	16	5
Pilot's "B" Licence ..	*	30	32	16	5
Pilot Instructor's Licence ..	*	10	32	16	5
Navigator's Licence, 1st Class	..	75	32	16	5
Navigator's Licence, 2nd Class	..	30	32	16	5
Wireless Operator's Licence ..	..	..	16	8	5

*For all flying tests the candidate shall be required to provide the aircraft and pay all charges incurred thereby, and in addition he shall pay, when an official examiner is carried on board during the flying test, a fee at the rate of Rs. 10 for each hour or part of an hour so flown:

Provided that an applicant for the issue or renewal of a Pilot's "A-1" or Pilot's "B" Licence who is required to undergo some part only of the technical examination shall pay a fee of Rs. 10 in respect of each group of subjects as shewn in Schedule 11 in which he is examined, and an applicant for the variation of such a licence by the

addition of a type of aircraft not already endorsed on the licence shall, if required to be examined on that type of aircraft, pay a fee of Rs. 5:

Provided further that in any other case when an applicant is required to undergo some part only of the technical examination, the fee may be reduced by such amount as the Governor General in Council may think proper in the circumstances of the case.

(2) An application for any licence or for the renewal or validation of any licence shall be accompanied by a Treasury receipt for the sum necessary to cover all the fees payable, except the fees for the official medical examination and the fees for the official examiner for a flying test if not a Government servant which shall be payable direct to the examiner.

(3) When in any case the licence is not issued or renewed or validated, the Governor General in Council may refund to the applicant such proportion of the sum paid as represents the cost of any examination not carried out or any licence not issued.

PART VI.—AIRWORTHINESS.

49. *Standard of airworthiness.*—A certificate of airworthiness may be issued by the Governor General in Council in respect of any flying machine which complies with the minimum standards of airworthiness prescribed in the United Kingdom in respect of design, materials, methods of construction and equipment, and the owner of a flying machine in respect of which a certificate of airworthiness is required by these Rules, or is applied for or issued shall submit such evidence relating thereto and shall submit to such inspection and tests of the flying machine as may be required by the Governor General in Council:

Provided that the Governor General in Council may, in respect of any flying machine or class of flying machines, from time to time prescribe modifications of the standard and such modified standard shall be complied with as a condition of the issue or remaining in force of a certificate of airworthiness in respect of the flying machine or class of flying machines.

50. *Acceptance of foreign standards.*—The Governor General in Council may, in respect of any flying machine, accept as evidence of compliance with the conditions of rule 49 a valid certificate of airworthiness issued by the competent authorities in any other part of His Majesty's Dominions or in any foreign country, provided it is shewn to his satisfaction that the conditions on which such certificate of airworthiness was granted are substantially equivalent to the conditions on which a certificate of airworthiness is granted by His Majesty's Government in the United Kingdom.

51. *Categories and Subdivisions.*—A certificate of airworthiness may be issued in respect of one or more of the categories and subdivisions of flying machines specified in Section A of Schedule III and the operations of the flying machine shall be restricted to those authorised for the categories to which the certificate of airworthiness extends.

52. *Instruments and equipment—minimum.*—A certificate of airworthiness shall not be granted in respect of any flying machine which

is not equipped with the following instruments and equipment, which shall be in working order, namely:—

Air speed indicator.

Altimeter.

Revolution indicator,

Such gauges as may be considered necessary by the Governor General in Council for the particular installation.

Safety belts or harness for the pilot and for each person carried in an open cockpit.

(In amphibian flying machines and in flying machines fitted with a retractable undercarriage) indicator of position of landing wheels.

53. *Instruments and equipment for flight.*—Every flying machine which is required by these rules to be provided with a certificate of airworthiness, shall, when flying, be fitted or equipped with the instruments and equipment specified in Section B of Schedule III according to the circumstances of the flight. The instruments and equipment shall be of types approved by the Governor General in Council, they shall be installed in a manner approved by him and shall be maintained in working order.

54. *Weight.*—Every flying machine which is required by these Rules to be certified as airworthy shall be weighed and marked in accordance with the provisions of Section C of Schedule III.

55. *Period of validity of certificates of airworthiness.*—A certificate of airworthiness shall be valid for a period of one year from the date on which the flying machine was passed for the issue of the certificate:

Provided that in the case of damage to the flying machine such as renders it unsafe for flight, or of failure to carry out the inspection prescribed in these Rules, or of failure to carry out any compulsory modification directed by the Governor General in Council, or of incorporation of any modification which has not been approved by the Governor General in Council, the certificate shall cease to be valid until the flying machine has been repaired or modified as the case may be and inspected and certified as required by these Rules.

56. *Renewal of certificates of airworthiness.*—The Governor General in Council may renew any certificate of airworthiness for such further period (not exceeding one year at a time) as he may think fit, and may for this purpose require the flying machine to be overhauled, inspected and certified in accordance with rule 57, and in addition may require the flying machine to be inspected by a person authorised in this behalf by the Governor General in Council or tested in flight, or to be so inspected and so tested, and the owner of the aircraft shall give all necessary facilities for such inspection and test.

57. *Periodical overhaul.*—Every flying machine required by these rules to be provided with a certificate of airworthiness, and every engine of such flying machine shall be periodically overhauled and after every such overhaul, and after the completion of any repairs to or modification of the flying machine or engine, the flying machine shall be inspected and certified in accordance with the provisions of Section E of Schedule III by the appropriate person licensed under rule 61.

58. *Modifications.*—(1) If at any time the Governor General in Council considers modifications to a flying machine, in respect of which a certificate of airworthiness is in force, to be necessary for safety, he may require such modifications to be carried out as a condition of the certificate of airworthiness remaining in force.

Such modifications may be notified in a general notice to aircraft owners and ground engineers or in a special notice to the owner of a particular aircraft.

(2) If modifications (including changes of equipment or its installation) which affect the safety of the flying machine are carried out in a flying machine in respect of which a certificate of airworthiness is in force, then, until the modifications have been approved by the Governor General in Council, the flying machine shall not fly except in so far as under these Rules it might fly if it had no certificate of airworthiness.

(3) Any such modifications shall be carried out by methods approved by the Governor General in Council and shall be inspected by the appropriate person licensed under rule 61, who shall certify the modification in the form and manner laid down in Section E of Schedule III.

59. *Maintenance standards and accessories.*—The Governor General in Council may in respect of any aircraft or class of aircraft which is certified as airworthy under these rules and in respect of any technical accessories or equipment used in connection with the operation of such aircraft, prescribe conditions for the technical operation, maintenance and use of such aircraft, accessories or equipment.

60. *Daily inspection.*—(1) A public transport flying machine effecting public transport shall not commence any flight unless it has, within the preceding 24 hours, been inspected and certified as safe for flight in accordance with these Rules by the appropriate person licensed under rule 61:

Provided that if any such flying machine not carrying passengers for remuneration on a regular scheduled air service is absent from its usual station, whether by reason of delay or otherwise, for a longer period than 24 hours, it may proceed on its journey if, at the time of commencement of a flight, it has not performed more than 12 hours flying and a period of more than four days has not intervened, since it was last so inspected and certified:

Provided further that no such flying machine shall commence any flight if, since such inspection, it has suffered any damage or revealed any defect which would render the machine unsafe for flight and which could not, in accordance with ordinary aeronautical practice, be remedied by the pilot or crew.

(2) The certificate required by sub-rule (1) shall be given in the form and manner specified in Section D of Schedule III.

(3) The pilot or commander of every flying machine shall before commencing any flight satisfy himself that:—

(a) having regard to the performance of the aircraft, the extent to which it is loaded, and the prevailing conditions, sufficient length of run is available to effect a safe take off and the line of flight in the take off direction is not obstructed, and that

(b) the flying machine is safe for flight according to the circumstances of the flight as laid down in Section D of Schedule III.

61. *Licensing of Ground Engineers*—

(1) For the purpose of rules 57, 58 and 60 the Governor General in Council may grant licences as Ground Engineers in the following categories to persons who satisfy the requirements as to practical experience, examination and tests laid down in Section F of Schedule III, namely:—

Category A.—Inspection of aircraft before flight.

Category B.—Inspection of aircraft during construction or overhaul.

Category C.—Inspection of aero-engines before flight.

Category D.—Inspection of aero-engines during construction or overhaul.

Category X.—Inspection, construction, installation and repair of aircraft instruments, accessories and equipment; special duties as may be specified in the licence.

(2) A Ground Engineer's licence shall not be granted to a person who has not attained the age of 21 years.

(3) Licenses shall remain valid, unless cancelled or suspended, for the periods specified therein, subject to a maximum period of twelve months in each case, and may thereafter be renewed by the Governor General in Council. A candidate for the renewal of a licence may be required to undergo. further examinations and tests as a condition of the renewal of the licence.

(4) A Ground Engineer licensed in a particular category shall be competent to deal only with the matters specified in sub-rule (1) against the category in which he is licensed.

(5) A licence granted under this rule shall specify the type or types of aircraft, aero-engines, instruments, accessories or equipment which the licensee is competent to deal with, and may contain restrictions limiting his competence to deal with any particular class of work, and the Governor General in Council may at any time vary such specifications or restrictions.

(6) Any licence granted under this rule may be cancelled, suspended or endorsed by the Governor General in Council after investigation where it appears to him that—

(a) the holder of such licence has performed work, or granted a certificate in respect of work, which has not been performed in a careful and competent manner, or

(b) the holder of such licence has granted a certificate in respect of any matter which he is not licensed to deal with,

(c) it is undesirable for any other reason that the holder of such licence should continue to exercise the functions of a Ground Engineer.

(7) The Governor General in Council may withhold the grant or renewal of a licence if for any reason he considers it desirable to do so.

62. *Fees.*—(1) The following fees shall be payable in respect of the issue, or renewal of certificates of airworthiness and Ground Engineers' licences and duplicate certificates and licences, and the inspections, tests and examinations required by this Part—

Certificates of Airworthiness.

(a) Issue or renewal of certificate, including such inspections as may be required by the Governor General in Council—

Aerodynes.

	Rs.
Maximum permissible weight of 2,500 lbs. or less ..	50
Maximum permissible weight over 2,500 lbs. but not more than 5,000 lbs.	75
Maximum permissible weight over 5,000 lbs. but not more than 10,000 lbs.	100
Maximum permissible weight over 10,000 lbs. but not more than 20,000 lbs.	200
Maximum permissible weight over 20,000 lbs.	300
(b) Issue of certificate without inspection (rule 50)	10
(c) Issue of duplicate certificate	5

Ground Engineers' Licences.

For the licence—

Issue, renewal or issue of duplicate licence	5

For each separate technical examination—

When required, on issue, renewal or extension—

(i) One category	10
(ii) Two categories	15
(iii) Each additional category	5
(iv) Additions of types of aircraft, engines, instruments, accessories or equipment to those already endorsed on the licence for each category in which additions are required ..	5

(2) When, in view of the candidate's experience and competence, it is decided to dispense with the whole or a part of the technical examination, the fee may be waived or reduced by such amount as the Governor General in Council thinks fit.

(3) An application for a licence or certificate or for the renewal or extension of a licence or certificate shall be accompanied by a Treasury Receipt for the sum necessary to cover all the fees payable, but when,

in any case, the licence or certificate is not issued, renewed or extended, the Governor General in Council may refund to the applicant such proportion of the sum paid as represents the cost of any examination or inspection not carried out or any licence or certificate not issued.

PART VII.—RADIO-TELEGRAPH APPARATUS.

63. *Aircraft for which apparatus is obligatory.*—Every public transport aircraft registered in British India, which is capable, according to its certificate of airworthiness, of carrying ten or more persons including the crew, shall, when used in international air navigation or on a regular air transport service operating in British India, be equipped with radio-telegraph apparatus of a type approved by the Governor General in Council capable of sending and receiving communications by radio-telegraphy or radio-telephony, and installed, bonded and screened in a manner approved by the Governor General in Council.

64. *Suspension of rules.*—The application of the rules in this Part may be suspended when owing to the lack of radio-telegraph organisations available for air traffic in a particular region the employment of radio-telegraph apparatus on board aircraft would serve no useful purpose.

PART VIII.—AIR-ROUTE BEACONS, AERODROME LIGHTS AND FALSE LIGHTS.

65. *Air-route beacons and aerodrome lights.*—(1) No air-route beacon or aerodrome light shall be established or maintained within British India, nor shall the character of the light exhibited therefrom be altered, except with the approval in writing of the Governor General in Council, and subject to such conditions as he may prescribe.

(2) No person shall wilfully or negligently injure or interfere with any air-route beacon or aerodrome light, established or maintained with the approval of the Governor General in Council, or any light exhibited therefrom.

66. *False lights.*—(1) Whenever in British India any light is exhibited—

(*a*) in the neighbourhood of an aerodrome or an air-route beacon so as to be liable to be mistaken for an aerodrome light or an air-route beacon; or

(*b*) which by reason of its liability to be mistaken for an aerodrome light or an air-route beacon is calculated to endanger the safety of aircraft; or

(*c*) which, being in the neighbourhood of an aerodrome, is liable by reason of its glare to endanger the safety of aircraft arriving at or departing from the aerodrome,

the Governor General in Council may serve a notice upon the owner or person in possession of the place where the light is exhibited or upon the person having charge of the light, directing that owner or person within

a reasonable time to be specified in the notice, to take effectual means for extinguishing or for effectually screening the light and for preventing for the future the exhibition of any similar light.

(2) The notice may be served either personally or by post, or by affixing the same in some conspicuous place near to the light to which the notice relates.

(3) An owner or person on whom a notice under sub-rule (1) has been served shall, in the absence of reasonable cause, the burden of proving which shall be upon him, comply with the directions contained in the notice.

(4) If any owner or person on whom a notice under this rule is served, neglects for a period of seven days to extinguish or effectually to screen the light mentioned in the notice, the Governor General in Council may enter upon the place where the light is and forthwith extinguish the same, doing no unnecessary damage.

PART IX.—LOG BOOKS.

67. (1) The following log books shall be kept in respect of aircraft registered in British India, namely:—

(*a*) for every aircraft an aircraft log book and an engine log book and where more than one engine is fitted, a separate log book for each engine;

(*b*) in addition, for every public transport aircraft (except where such aircraft does not leave the vicinity of its starting place and returns without landing elsewhere to its starting place) and for every aircraft engaged in international navigation, a journey log book.

(2) The log books shall be kept up to date in such manner as the Governor General in Council may direct.

(3) The journey log book shall be issued by the Governor General in Council; other log books shall be in the form required by the Governor General in Council.

(4) The log books shall be preserved for two years from the date of the last entry therein.

(5) No person shall destroy, mutilate, alter or render illegible any log book or any entry made therein, or wilfully make or procure or assist in the making of any false or fraudulent entry in or omission from any log book.

PART X.—INVESTIGATION OF ACCIDENTS.

68. In this Part the expression "serious structural damage" in relation to an aircraft means:—

(*i*) the telescoping or breaking apart of the fuselage; or

(*ii*) the breaking of a main spar; or

(*iii*) the breaking of any part of the controls; or

(*iv*) damage by fire to any part of the aircraft.

69. *Notification of accidents.*—(1) When an accident, in which any aircraft is involved, occurs in or over British India, and such accident involves death or personal injury to any person, whether carried in the aircraft or not, or serious structural damage to the aircraft, or is suspected to have been caused or contributed to by the failure in the air of any part of the aircraft, the pilot, or, if the pilot is incapacitated by injury, the owner or, if the owner is not present or is incapacitated by injury, the hirer of the aircraft shall

(*a*) send notice thereof by telegram to the Director of Civil Aviation in India, and

(*b*) give information to the District Magistrate and the Officer in charge of the nearest Police Station.

(2) The notice and information shall be sent as soon as possible and by the best available means and in any case within twenty-four hours after the occurrence of the accident.

(3) The notice to the Director of Civil Aviation in India shall contain the following information:—

(*i*) the nationality and the registration marks of the aircraft;

(*ii*) the name of the owner and hirer (if any) of the aircraft;

(*iii*) the name of the pilot of the aircraft;

(*iv*) the place where the accident occurred;

(*v*) the date and time when the accident occurred;

(*vi*) the nature of the accident;

(*vii*) a brief statement of the extent of damage to the aircraft; and

(*viii*) whether death or personal injury was caused by the accident, and, if so, to whom.

70. *Report on accidents.*—The pilot or owner of an aircraft which has been involved in an accident, whether notifiable under rule 69 or not, shall, if required by the Director of Civil Aviation in India, submit to the Director, a written report on such accident in such form as he may prescribe.

71. *Removal of wreckage.*—(1) In the case of an accident which is notifiable under rule 69 and which involves serious structural damage, or in any other case in which the Director of Civil Aviation in India gives notice to the owner or other person in charge of the aircraft to this effect, the aircraft shall not, except under the authority of the Director of Civil Aviation in India, be removed or otherwise interfered with:

Provided that subject to compliance with the provisions of rule 61 of the Indian Aircraft Rules, 1920, in so far as they may be applicable:—

(*i*) if the aircraft is wrecked on water, the aircraft or any parts or contents thereof may be removed to such extent as may be necessary for bringing it or them to a place of safety;

(*ii*) the aircraft or any parts or contents thereof may be removed or interfered with so far as may be necessary for the purpose of extricating persons or animals, preventing the destruction of the aircraft or its contents by fire or other cause or preventing any danger or obstruction to the public; and

(*iii*) goods, mails or passengers' baggage may be removed from the aircraft under the supervision of the pilot, a member of the crew, an official of the operating company, an officer of police, a Magistrate, or an officer of the Civil Aviation Directorate, and, in the absence of any such person, mails may be removed under the supervision of an officer of the Posts and Telegraphs Department, and passengers' baggage by the owner or owners thereof.

(2) The Director of Civil Aviation in India may authorise any person, so far as may be necessary for the purposes of any investigation under these rules, to take measures for the preservation of any aircraft involved in an accident, and such person may thereupon have access to, examine, or otherwise deal with the aircraft;

(3) The owner of the aircraft or his nominated representative shall have the right to be present during any examination or other action taken under sub-rules (1) and (2) provided that the Director of Civil Aviation shall not be bound to postpone any action which he may consider necessary under this rule by reason of the absence of the owner or his representative.

72. *Inspector's Investigation.*—(1) The Director of Civil Aviation in India may order the investigation of any accident, whether notifiable under rule 69 or not and may by general or special order appoint any person (hereinafter referred to as an Inspector of Accidents) for the purpose of carrying out such investigation.

(2) The investigation shall be conducted in such manner that if a charge is made or is likely to be made against any person, that person shall have an opportunity of being present and of making any statement, or giving any evidence and producing witnesses on his behalf.

(3) The Inspector of Accidents shall make a report to the Director of Civil Aviation in India stating all relevant facts with regard to the accident and his findings with regard to the causes of the accident and adding any recommendations which he may think fit to make with a view to the avoidance of similar accidents in future.

73. *Powers of Inspector.*—For the purpose of such investigation an Inspector of Accidents shall have power:—

(*a*) by summons under his hand to require the attendance of any person whom he thinks fit to call before him and examine for such purpose and to require answers or returns to any inquiries he thinks fit to make;

(*b*) to require any such person to make and sign a declaration of the truth of the statements made by him in his examination;

(*c*) to require and enforce the production of all books, papers, documents and material objects which he considers important for such purpose;

(*d*) to have access to and examine any aircraft concerned in the accident, the place where the accident occurred, or any other place the entry upon and examination of which appears to the Inspector requisite for the purposes of the investigation.

74. *Inspector's fee.*—When a person other than an officer of Government is appointed to investigate an accident, he may be granted such fee and expenses as may be determined by the Governor General in Council.

75. *Formal Investigation.*—Where it appears to the Governor General in Council that it is expedient to hold a formal investigation of an accident, he may, whether an investigation has been made under Rule 62 or not, by order direct a formal investigation to be held; and with respect to any such formal investigation the following provisions shall have effect:—

(1) The Governor General in Council shall appoint a competent person, in these rules referred to as "the Court" to hold the investigation, and may appoint one or more persons possessing legal, aeronautical, engineering, or other special knowledge to act as assessors, and may direct that the Court and the assessors shall receive such remuneration as he may determine.

(2) The Court shall hold the investigation in open court in such manner and under such conditions as the Court may think most effectual for ascertaining the causes and circumstances of the accident and enabling the Court to make the report hereinafter mentioned.

(3) (*i*) The Court shall have, for the purpose of the investigation, all the powers of a Civil Court under the Code of Civil Procedure, 1908, and without prejudice to those powers the Court may—

(*a*) enter and inspect, or authorise any person to enter and inspect, any place or building, the entry or inspection whereof appears to the Court requisite for the purposes of the investigation; and

(*b*) enforce the attendance of witnesses and compel the production of documents and material objects; and every person required by the Court to furnish any information shall be deemed to be legally bound to do so within the meaning of Section 176 of the Indian Penal Code.

(*ii*) The assessors shall have the same powers of entry and inspection as the Court.

(4) The investigation shall be conducted in such manner that, if a charge is made or likely to be made against any person, that person shall have an opportunity of being present and of making any statement or giving any evidence and producing witnesses on his behalf.

(5) Every person attending as a witness before the Court shall be allowed such expenses as the Court may consider reasonable. Provided that, in the case of the owner or hirer of any aircraft concerned in the accident and of any persons in his employment or of any other person concerned in the accident, any such expenses may be disallowed if the Court, in its discretion, so directs.

(6) The Court shall make a report to the Governor General in Council stating its findings as to the causes of the accident and the circumstances thereof, and adding any observations and recommendations which the Court thinks fit to make

with a view to the preservation of life and the avoidance of similar accidents in future, including a recommendation for the cancellation, suspension or endorsement of any licence or certificate issued under these Rules.

(7) The assessors (if any) shall either sign the report, with or without reservations, or state in writing their dissent therefrom and their reasons for such dissent, and such reservations or dissent and reasons (if any) shall be forwarded to the Governor General in Council with the report. The Governor General in Council may cause any such report and reservations or dissent and reasons (if any) to be made public, wholly or in part, in such manner as he thinks fit.

76. *Obstruction of proceedings.*—(1) A person shall not obstruct or impede the Court or an Inspector of Accidents or an assessor or any person acting in the exercise of any powers or duties under the rules in this Part.

(2) A person shall not without reasonable excuse (the burden of proving which shall lie on him) fail to comply with any summons or requisition of a Court or an Inspector of Accidents holding an investigation under the rules in this Part.

77. *Saving.*—Nothing in this Part shall limit the power of the Governor General in Council with regard to the cancellation, suspension or endorsement of any licence or certificate issued under these Rules.

PART XI.—AERODROMES.

78. *Government aerodromes.*—A Government aerodrome shall not be open to use by any member of the public save to such extent, if any, and subject to such conditions as the Governor General in Council may determine.

79. *Places other than Government aerodromes.*—A place in British India other than a Government aerodrome shall not be used as a regular place of landing and departure by a scheduled air transport service or for a series of landings and departures by any aircraft carrying passengers for hire or reward unless it has been licensed for the purpose, or save in accordance with the conditions, if any, of such licence.

80. *Licensed aerodromes.*—An aerodrome shall be licensed by the Governor General in Council in one of the following categories, namely:—

(*a*) for public use;

(*b*) for private use; that is to say, for use by the licensee and by individuals specifically authorised by the licensee.

81. *Public aerodromes.*—Every aerodrome which is licensed for public use or which is open to use by aircraft registered in India upon

payment of charges shall to the same extent and upon the same conditions be open to use by aircraft possessing the nationality of a contracting State. Every such aerodrome shall at all reasonable times be open to use by any aircraft in the service of His Majesty.

82. *Tariff charges.*—At every aerodrome referred to in rule 81 there shall be exhibited in a conspicuous place a single tariff of charges, including charges for landing and length of stay, which shall not exceed the charges specified in, and shall be leviable in accordance with the provisions contained in Section B of Schedule V, and such tariff shall be applicable alike to all aircraft whether registered in India or in any contracting State.

83. *Qualification of licensee.*—A licence for an aerodrome shall not be granted to any person or corporation other than—

(*a*) a British subject or person under His Majesty's protection, or

(*b*) a company or corporation registered and having its principal place of business in His Majesty's dominions.

84. *Period of validity of licence.*—An aerodrome licence may be granted for any period not exceeding twelve months, and on each occasion of renewal may be renewed for any period not exceeding twelve months.

85. *Classification of Aerodromes.*—An aerodrome may be licensed for all types of aircraft or for certain specified types or classes of aircraft and the licence may specify the conditions on which the aerodrome may be used.

86. (1) *Conditions governing the grant of a licence.*—A licence shall not be granted in respect of any place which does not satisfy the requirements specified in Part A of Schedule V.

(2) While a licence is in force no alterations to the landing area or to the buildings or other structures on the aerodrome which may affect the safety of aircraft shall be undertaken save with the previous approval of the Governor General in Council. Application for such approval shall be addressed to the Director of Civil Aviation in India and shall be accompanied by full particulars with plans of any such alterations including alterations to surrounding obstructions which may affect the safety of aircraft.

(3) The necessary approval may be granted or withheld and if granted may be granted subject to such conditions (including conditions involving a revision of the original conditions of licence) as the Governor General in Council may think fit.

(4) If any alteration of the nature referred to in sub-rule (2) is undertaken without the previous approval of the Governor General in Council the licence may be cancelled.

(5) The licensee shall maintain the aerodrome in a fit state for use by aircraft and adequately marked to the satisfaction of the Governor General in Council during the whole period of the currency of the licence where this exceeds a period of three months and shall, if the aerodrome becomes unserviceable, immediately notify the Director of Civil Aviation in India by telegraph.

87. *Fees.*—The fees chargeable for the grant or renewal of a licence for an aerodrome shall be—

		Rs.
(1)	When the licence is granted or renewed for a period not exceeding three months	15
(2)	When the licence is granted or renewed for a period exceeding three months but not exceeding six months ..	20
(3)	When the licence is granted or renewed for a period exceeding six months but not exceeding 12 months ..	30

Provided that if, in the opinion of the Governor General in Council, it is necessary or expedient before the grant or renewal of the licence, for the aerodrome in question to be inspected by an officer of Government or other person authorised by the Director of Civil Aviation in India, an additional fee of Rs. 30 shall be chargeable for the inspection, and the applicant shall also be required to pay the travelling expenses of the inspecting officer.

PART XII.—RULES OF THE AIR.

SECTION I.—LIGHTS AND VISUAL SIGNALS TO BE DISPLAYED BY AIRCRAFT AND SOUND SIGNALS.

A.—General.

88. *Obligation to display the required lights.*—The rules concerning lights to be displayed by aircraft shall be complied with in all weathers from sunset to sunrise, and during such time no other lights which may be mistaken for the prescribed lights shall be exhibited. The said lights shall not be dazzling.

89. *Angular limits of lights.*—The angular limits of the lights referred to in this Part shall be determined when the aircraft is in its normal position for flying on a rectilinear horizontal course and as shewn diagrammatically in figure 1 in Schedule IV.

90. *Failure of lights, etc.*—(1) In the event of the failure of any light which is required by these Rules to be displayed by aircraft in flight, the aircraft concerned shall, if the light cannot immediately be repaired or replaced in flight, land as soon as it can do so without danger.

(2) Where, owing to the difficulty of producing lamps to meet the requirements of these Rules as regards sector lights, an overlap of those lights is unavoidable, the overlap shall be as small as possible; there shall be no sector in which no light is visible.

91. *Savings.*—Nothing in these rules shall interfere with the operation of any special rules made by the Government of any State with respect to the additional signal or station lights for military aircraft, aircraft exclusively employed in State services or for aircraft in group formation, or with the exhibition of recognition signals adopted by owners of aircraft which have been authorized by their respective Governments and duly published.

B.—Lights and visual signals to be displayed by aircraft.

Flying machines.

92. *In the air or on land aerodromes.*—(1) Every flying machine in the air or on the landing area of a land aerodrome shall display the following lights, that is to say:—

(*a*) on the right side, a green light, fixed so as to show an unbroken light, visible at a distance of at least 5 miles, throughout a dihedral angle of 110° formed by two vertical planes, of which one is parallel to the plane of symmetry and directed dead ahead, and the other is directed to the right;

(*b*) on the left side, a red light, fixed so as to show an unbroken light, visible at a distance of at least 5 miles, throughout a dihedral angle of 110° formed by two vertical planes, of which one is parallel to the plane of symmetry and directed dead ahead, and the other is directed to the left;

(*c*) at the rear, a white light, fixed so as to show astern an unbroken light, visible at a distance of at least 3 miles, throughout a dihedral angle of 140° formed by two vertical planes bisected by the plane of symmetry.

(2) In a case where, in order to comply with the provisions of sub-rule (1), a single light has to be replaced by several lights, the field of visibility of each of these lights shall be so limited that only one can be seen at a time.

(3) In the case of a flying machine with a maximum span of less than 65 feet, the lights required by this rule may be combined in one or more lamps, placed centrally, provided that the requirements of sub-rules (1) and (2) as to colour and visibility are complied with.

93. *Under way on the surface of the water.*—Every flying machine under way on the surface of the water shall display lights in accordance with the following provisions:—

(1) If it is under control and is not being towed, it shall display the lights required by rule 92, and in addition, forward, a white light fixed so as to show forward an unbroken light visible, at a distance of at least 3 miles, throughout a dihedral angle of 220° formed by two vertical planes and bisected by the plane of symmetry.

(2) If it is being towed, it shall display the lights required by rule 92.

(3) If it is not under control, it shall display two red lights placed where they can best be seen, one vertically over the other, not less than 3 feet apart, and both being visible, so far as practicable, all round the horizon at a distance of at least 2 miles, and, in addition—

(*a*) if making way, it shall display the lights required by rule 92; or

(*b*) if not making way, it shall display the light required by clause (c) of sub-rule (1) of rule 92.

(4) If it is towing another aerodyne, it shall display the lights specified in clause (1) and in addition, forward, two white lights placed where they can best be seen, one vertically over the other, not less than 6 feet apart, and visible at a distance of at least 3 miles in a dihedral angle of 220° formed by two vertical planes and bisected by the plane of symmetry.

94. *At anchor or moored on the surface of the water.*—Every flying machine whether at anchor or moored on the surface of the water shall display lights in accordance with the following provisions, namely:—

(1) In every case, it shall display forward centrally where it can best be seen, a white light, visible all round the horizon at a distance of at least 1 mile.

(2) In a case where the length of the flying machine is 150 feet or upwards, it shall display, in addition to any other light required by this rule, a white light at or near its stern at a lower height than the forward light mentioned in clause (1), and visible all round the horizon at a distance of at least 1 mile.

(3) In a case where the maximum span of the flying machine is 150 feet or upwards, it shall display, in addition to any other light required by this rule, a white light on each side placed in such a manner as to demarcate the maximum lateral dimension of the flying machine and visible, so far as practicable, all round the horizon at a distance of at least 1 mile.

Gliders.

95. In all cases in which flying machines are required by these rules to display lights, a glider shall display a red light visible, so far as practicable, in all directions.

Balloons and Kites.

96. *Free Balloons.*—A free balloon shall display a red light placed not less than 15 or more than 30 feet below the basket and visible, so far as practicable, in all directions at a distance of at least 2 miles.

97. *Captive balloons and kites.*—In the case of a captive balloon or kite, lights shall be displayed in accordance with the following provisions, namely:—

(1) when flown at an altitude exceeding 180 feet above the ground, or at any altitude if it is less than 3 miles from an aerodrome or from a recognised air route the balloon or kite shall display a white light placed 12 feet vertically above a red light, these lights being visible so far as practicable in all directions at a distance of at least 2 miles, the upper white light being placed not less than 15 or more than 30 feet below the basket, or, if there is no basket, below the lowest part of the balloon or kite:

(2) in addition, from the mooring cable of the balloon or kite there shall be displayed at intervals of 1,000 feet measured from the said group of two lights, similar groups of two lights, one white and one red, and if the lowest group of lights is obscured by clouds, an additional group shall be displayed below the cloud base:

(3) in addition, the position of the object to which the balloon or kite is moored on the ground shall be marked by a group of three flashing lights, arranged on a horizontal plane at the apexes of a triangle approximately equilateral and measuring at least 75 feet on each side; the side of this triangle, perpendicular to the horizontal projection of the cable, shall be delimited by two red lights, the third light shall be a green light placed opposite the direction of the cable.

98. *Day markings for captive balloons.*—By day, the mooring cable of a captive balloon shall have attached to it at intervals of not more than 600 feet measured from the basket (or, if there is no basket, from the lowest part of the balloon) tubular streamers, not less than 8 inches in diameter and 6 feet in length, and marked with alternate bands of white and red 18 inches in width.

99. *Day markings for kites.*—By day, the mooring cable of a kite shall be marked, either in the manner required by rule 98 in the case of a captive balloon, or by streamers of stout paper attached to the cable at intervals of 300 feet measured from the lowest part of the kite, such streamers being not less than 30 inches in length and one foot in width in their widest part and marked with alternate bands of white and red 4 inches wide.

Airships.

100. *Under way.*—(1) Except as provided in rule 101 an airship when under way shall display the following lights, namely:—

(*a*) forward, a white light fixed so as to show forward an unbroken light visible at a distance of at least 5 miles and throughout a dihedral angle of 220° formed by two vertical planes and bisected by the plane of symmetry;

(*b*) on the right side, a green light fixed so as to show an unbroken light visible at a distance of at least 5 miles and throughout a dihedral angle of 110° formed by two vertical planes, of which one is parallel to the plane of symmetry and directed dead ahead, and the other is directed to the right;

(*c*) on the left side, a red light fixed so as to show an unbroken light visible at a distance of at least 5 miles and throughout a dihedral angle of 110° formed by two vertical planes, of which one is parallel to the plane of symmetry and directed dead ahead and the other is directed to the left;

(*d*) at the rear, a white light fixed so as to show astern an unbroken light visible at a distance of at least 3 miles and throughout a dihedral angle of 140° formed by two vertical planes and bisected by the plane of symmetry.

(2) In a case where, in order to comply with the provisions of sub-rule (1), a single light has to be replaced by several lights, the field of visibility of each of those lights shall be so limited that only one can be seen at a time.

101. *Not under control.*—(1) An airship which is under way and which is not under control, or which has voluntarily stopped its engines, or which is being towed, shall display the following lights, namely:—

(*a*) the forward and rear lights required by clauses (*a*) and (*d*) of sub-rule (1) of rule 100;

(*b*) in addition, below the airship, two red lights, one placed vertically below the other 12 feet apart, the upper light being 25 feet below the control car, and both being visible so far as practicable in all directions at a distance of not less than two miles;

(*c*) in addition, if making way but not otherwise, the side lights required by clauses (*b*) and (*c*) of sub-rule (1) of rule 100.

(2) By day, an airship in the circumstances mentioned in sub-rule (1) of this rule shall display two black balls or shapes, each at least 2 feet in diameter, one placed vertically below the other 12 feet apart, the upper one being 24 feet below the control car, and both being visible so far as practicable in all directions.

Where necessary in order to comply with this requirement, the said group of two black balls or shapes may be duplicated.

102. *Moored.*—(1) An airship when moored to a mooring mast shall display at or near the rear a white light visible, so far as practicable, in all directions at a distance of at least 3 miles.

(2) An airship, when moored to the ground or the surface of the water by a cable, shall display, forward, the white light required by clause (*a*) of sub-rule (1) of rule 100, and at the rear, the white light required by clause (*d*) of that sub-rule and in addition the airship and its mooring cable shall be lighted or marked in accordance with such of the provisions of rules 97 and 98 as are applicable in the case of a captive balloon.

(3) An airship while picking up its moorings, although considered as being under way and not being under control, shall however display only the lights specified in rule 100 until it is finally made fast.

C.—Sound Signals.

103. *Fog, mist, etc.*—In fog, mist, falling snow or heavy rainstorm, whether by day or night, an aircraft on the water shall make the following sound signals, namely:—

(*a*) If not anchored or moored, a sound at intervals of not more than two minutes, consisting of two blasts of about five seconds duration with an interval of about one second between them.

(*b*) If at anchor or moored, the rapid ringing of an efficient bell or gong for about five seconds at intervals of not more than one minute.

SECTION II.

GROUND MARKINGS AND SIGNALLING.

A. GROUND MARKINGS, LIGHTS AND SIGNALS ON AND IN THE VICINITY OF AERODROMES OPEN TO PUBLIC USE.

104. *Ground markings.*—At every land aerodrome open to public use, the boundaries of the landing area shall, by means of suitable markings, be rendered clearly visible both to aircraft in the air and to aircraft manœuvring on the landing area. In addition, a circle marking may be placed on the landing area. All obstructions existing on a landing area shall be clearly marked. In case part of the marked landing area should become unfit for use, this part shall be delimited by clearly visible markings or flags, and may, in addition, be indicated by one or more clearly visible crosses.

105. *Ground signals.*—(1) At every aerodrome open to public use—

(*a*) the direction of the wind at the landing area shall be clearly indicated by one or more of the recognised methods, *e.g.*, conical streamers, smudge fire, etc.;

(*b*) if there is a landing T, it shall be used to indicate the compulsory direction for landing and taking-off, even should such direction not correspond to the direction of the wind. Normally, the T shall be so placed that the long arm lies along the direction of the wind, with the cross arm set at that end of the long arm from which the wind is blowing. In the event of there being no wind or a light irregular wind, the T shall be fixed in the direction in which the landing or departure is to be made, and the fact that it is fixed shall be signalled by the presence of a ball, mounted on a mast on the signal area and clearly visible both to aircraft in flight and to those manœuvring on the landing area.

(2) When, by way of exception, at certain aerodromes, the landing area is regarded as divided into two approximately equal zones, one for departure and the other for landing, as provided for in rule 126, this special arrangement must be indicated by a full star of five points (constituted by a regular non-convex pentagon which could be inscribed in a circle of not less than forty-five feet diameter) as shown in figure 2 in Schedule IV.

(3) When under rule 118 the special rules for air traffic prescribed in Section V are temporarily suspended, wholly or partially, in respect of a specified aerodrome such suspension shall be indicated by a red square panel, each side of which measures at least ten feet, placed horizontally as shown in figure 3 in Schedule IV.

(4) If an order issued under rule 118 prescribes among other things that circuits outside the landing area and those for taking off and landing, which are referred to in clause (*b*) of rule 120 and rule 124, are to be right-handed, the red square panel, prescribed in sub-rule (3) of this rule, shall, along two of its sides, be bordered by a red rectangular panel at least three feet in width, separated from the central panel by at least three feet. At the extremity of one of the rectangular panels

shall be placed a red triangle so as to indicate that the direction of the circuit is right-handed as shown in figure 4 in Schedule IV. If, however, the only object of the order is that circuits should be right-handed, the red square panel shall not be displayed.

(5) When special circumstances call for a prohibition to land liable to be prolonged, use shall be made of a red square panel, placed horizontally, each side of which measures at least ten feet and the diagonals of which are covered by yellow strips at least two feet in width, arranged in the form of an X as shown in figure 5 in Schedule IV.

(6) When the bad state of the landing area or any other reason calls for the observance of certain precautions in landing, use may be made of a red square panel, placed horizontally, each side of which measures at least ten feet and one of the diagonals of which is covered by a yellow strip at least two feet in width as shown in figure 6 in Schedule IV.

(7) When a landing by means of a radioelectric guide is taking place the fact may be signalled by hoisting on a mast a yellow triangular equilateral pyramid, each side of which measures at least six feet as shown in figure 7 in Schedule IV.

(8) The signals referred to in the foregoing sub-rules shall, whenever possible, be displayed in a special part of the aerodrome selected as a signal area; by way of exception, the wind indicators and the landing T referred to in sub-rule (1) of this rule may be located elsewhere.

(9) During periods of poor visibility, the lights existing for night lighting shall be operated by day, whenever possible and in so far as necessary.

106. *Ground lights.*—(1) At every aerodrome open to public use and used for night flying, the following provisions shall apply during the working hours of the night service, namely:—

(*a*) *Dangerous lights.*—No lights shall be exhibited at or in the neighbourhood of an aerodrome which may endanger the safety of aircraft, whether by reason of glare, or by causing confusion with or preventing clear visual reception of the lights or signals prescribed in these rules.

(*b*) *Aerodrome beacon.*—The position of the aerodrome may be indicated by a luminous beacon.

(2) At every land aerodrome open to public use and used for night flying, the following provisions shall apply during the working hours of the night service, namely:—

(*a*) *Lighting of obstructions.*—Fixed red lights shall be exhibited—

(i) on all obstructions within the landing area which constitute a danger to aircraft in motion on the landing area;

(ii) as far as possible, on all obstructions within 1,000 yards of the boundary of the landing area and constituting a danger to aircraft approaching or leaving the aerodrome in a normal manner. In case it should be impossible to exhibit fixed red lights on such obstructions, their horizontal projection and the centre of the obstructions shall, as far as possible, be clearly indicated by synchronised red flashing or occulting lights, placed on a level with or near to the ground.

(*b*) *Lighting of landing T and of wind indicators.*—The landing T, if used, and at least one of the wind indicators shall be illuminated with fixed lighting, preferably white.

(*c*) *Lighting of signals.*—The signals displayed in the signal area shall be suitably illuminated.

(*d*) *Lighting of landing area*—

(i) The landing area or the part thereof on which landings should be made shall be illuminated by a floodlight or floodlight system during landing manœuvres;

(ii) In default, one of the following methods may be used:

First method: A line of lights spaced 150 feet apart shall be laid out on the ground, consisting of a central section of six white lights to indicate that landings should be made on the adjacent portion of the landing area and on either side of this line, with at least two green lights at one end and at least two red lights at the other end to indicate that landings should be made from the direction of the green lights towards the red lights;

Second method: Lights shall be laid out on the ground in the form of a T, the long arm of which shall be composed of at least four lights in a line not less than 250 yards in length. The light at the foot of the T shall indicate the place where the aerodyne should first make contact with the ground and the cross arm of the T shall indicate the place where it should finish its run. Landings may be made on either side of the long arm of the T but always parallel to that arm; in the event, however, of the area situated on either side of the long arm becoming obstructed, the light indicating the cross arm on that side shall be removed and landing shall be effected on the opposite side.

The direction of landing and take-off will be given by the two alternative methods referred to above; the landing T shall not, therefore, be used.

(*e*) *Approach lighting*—The most favourable sectors of approach to the landing area may be indicated by green lights.

(*f*) *Boundary lighting*—The boundary of the landing area shall be marked by fixed yellow-orange lights, normally laid out 300 feet apart:

Provided that—

(i) when there are obstructions on the boundary of the landing area, the lights serving to mark such obstructions may take the place of boundary lights;

(ii) when the boundary lights are in the form of strips, their colour may be red;

(iii) when local conditions render unavoidable the use of gas boundary lights, they may be given an intermittent character;

(iv) when the boundary of the landing area cannot be marked, only the extremities of such landing area between which aircraft may move without danger shall be indicated by fixed yellow-orange lights.

(8) At every water aerodrome open to public use and used for night flying, the provisions of sub-rule (2) shall equally apply, except in cases of obvious impossibility.

B. DISTRESS, URGENCY AND SAFETY SIGNALS.

107. (1) *General.*—The following general provisions shall apply to all distress, urgency and safety signals, namely:—

(*a*) the signals referred to in this rule may be transmitted only with the authorisation of the commander or person responsible for the aircraft;

(*b*) when these signals are sent by radiotelegraphy or radiotelephony, the group or spoken expression shall be sent three times, and followed by the group DE and the call sign, also sent three times, of the station which sends it. In the case of "safety" messages, the frequency to be employed is that for "distress" messages.

(2) *Distress Signals.*—When an aircraft is threatened by grave and imminent danger and requests immediate assistance, the following signals shall be used or displayed, either together or separately, before the sending of a message, namely:—

(*a*) by radiotelegraphy—

the signal . . . — — — . . . [See Note (1)].

(*b*) by radiotelephony—

the spoken expression "MAYDAY" (corresponding to the French pronunciation of the expression "m'aider").

(*c*) by visual signalling—

(i) the signal . . . — — — . . . with signalling apparatus;

(ii) a succession of red pyrotechnical lights fired at short intervals;

(iii) the two-flag signal corresponding to the letters NC of the International Code of Signals [See Note (2)];

(iv) the distant signal, consisting of a square flag having, either above or below it, a ball or anything resembling a ball [See Note (2)].

(*d*) by sound signalling—

(i) the signal . . . — — — . . . with any sound apparatus;

(ii) a continuous sounding with any sound apparatus [See Note (2)].

Note (*1*).—When the signal specified in clause (*a*) above is sent by radiotelegraphy on 500 kc/s (600 m.), it shall, when possible, in order to be received by automatic maritime apparatus, be followed by the automatic alarm signal consisting of a series of twelve dashes of four seconds each, separated by an interval of one second.

Note (*2*).—The signals specified in (iii) and (iv) of clause (*c*) and (ii) of clause (*d*) above are normally for use by seaplanes on the surface of the water, but they may also be used by aircraft in the air.

(3) *Urgency Signals.*—(*a*) When an aircraft wishes to give notice of difficulties which compel it to land without requiring immediate assistance, the following signals shall be used, either together or separately, before the sending of a message, namely:—

(i) by radiotelegraphy—

the group PAN, the letters of which must be well separated that the signals A N may not be transformed into one signal P;

(ii) by radiotelephony—

the spoken expression PAN (corresponding to the French pronunciation of the word "panne");

in cases where, owing to the rapidity of the manœuvres to be executed, the aircraft is unable to transmit the intended message by radiotelegraphy or radiotelephony, the signal PAN not followed by a message retains this meaning;

(iii) by visual signalling—

by day: a succession of white pyrotechnical lights;

by night: a succession of white pyrotechnical lights, or a succession of short and intermittent flashes with the navigation lights.

(*b*) When an aircraft has a very urgent message to transmit concerning its own safety, or that of an aircraft, ship or other vehicle, or the safety of any person on board or within sight, the following signals shall be used, either together or separately, before the sending of the message. As a general rule they are addressd to a specific authority.

(i) by radiotelegraphy—

the group XXX;

the letters of each group and the successive groups shall be clearly separated from each other;

(ii) by visual signalling—

either a succession of green pyrotechnical lights;
or a succession of green flashes with signalling apparatus.

(4) *Safety Signals.*—When an aircraft is about to transmit a message concerning the safety of navigation or giving important meteorological warnings, the following signals shall be used, either together or separtely, before the sending of a message, namely:—

(*a*) by radiotelegraphy—

the group T T T;

the letters of each group and the successive groups shall be clearly separated from each other.

(*b*) by radiotelephony—

the French word "SECURITE" (to which correspond in English pronunciation the syllabus SAY-CURE-E-TAY).

(*c*) by visual signalling—

International visual signalling procedure, by signalling apparatus or flags.

C. OTHER SIGNALS TO OR FROM AIRCRAFT.

108. *At aerodromes open to public use*—

(1) By day and by night, when there is an officer controlling the traffic, he shall, except as permitted by sub-rule (2) of this rule, use the following visual signals, namely:—

(*a*) to authorise movement on the landing area, but excluding authorisation to take-off, he shall direct at the aircraft an intermittent white luminous beam;

(*b*) to authorise taking-off, he shall direct at the aircraft a continuous white luminous beam;

(*c*) to prohibit taking-off or any movement on the landing area, he shall direct at the aircraft an intermittent red luminous beam;

The signals in this sub-rule may be preceded by the last three letters of the registration group of the aircraft to which the signal is addressed; these three letters shall be sent in the International Morse Code, by using a luminous beam of the same colour as the signal which is to be sent.

(2) By day, when there is on the landing area an officer controlling the traffic, he may use the following signals, namely:—

(*a*) to authorise movement on the landing area, but excluding authorisation to take-off, he shall wave a small white flag in the direction to be followed;

(*b*) to authorise taking-off, he shall lower a small white flag in the direction of taking-off;

(c) to prohibit taking-off or movement towards the taking-off point, he shall raise a small red flag;

(d) to prohibit landing, he shall wave a small red flag vertically above his head.

(3) An aircraft wishing to land at night, without being compelled to do so, on an aerodrome having a ground control, shall, before landing, ask permission by a signal made either by radiotelegraphy or radiotelephony or by means of a lamp or a projector, the use of the navigation lights for this purpose not being permissible.

The visual signal, sent by International Morse Code, shall be composed of the last three letters of the registration group of the aircraft; this signal shall be repeated for as long as may be necessary.

The reply will be given from the ground to the aircraft either by radiotelegraphy or radiotelephony or by visual signal, it being understood that when permission has been asked by visual signal the reply shall always be by visual signal. The visual signal shall consist of a repetition of the same three-letter sign made with the signalling lights of the aerodrome.

These signalling lights shall be constituted either by a group of lights arranged on a horizontal plane at the apexes of an equilateral triangle, each side of which measures from one to three yards, or by a luminous beam directed at the aircraft.

The colour green shall be used to give permission to land and the colour red to prohibit landing.

109. *Signals for aircraft not to land.*—(1) At every aerodrome, the firing of a red pyrotechnical light or the display of a red flare from the ground, whether by day or by night and notwithstanding any previous permission, shall be taken as an instruction to aircraft in flight that they are not to land for the moment and to aircraft manœuvring on the landing area that they are to stop moving.

(2) At aerodromes provided with the triangular device provided for in sub-rule (3) of rule 108, the emission by such device of intermittent red lights shall, whether by day or by night and notwithstanding any previous permission, instruct aircraft in flight that they are not to land for the moment.

110. *Signals for aircraft to land.*—To require an aircraft to land, the following signals shall be used, namely:—

(a) by day: a series of projectiles discharged at intervals of ten seconds, each showing on bursting black smoke.

(b) by night: a series of projectiles discharged at intervals of ten seconds, showing on bursting white lights or stars.

In addition, if it is necessary to distinguish amongst several the aircraft which is to land, an intermittent white luminous beam shall be directed at that aircraft.

Provided that, when the authority who desires to give the order to land is able to establish a radioelectric communication with the aircraft, this order may be given by using the means of communication established.

111. *Warning signal for prohibited areas.*—To warn an aircraft that it is in the vicinity of a prohibited area and should change its course, the following signals shall be used, namely:—

(*a*) by day: a series of projectiles discharged at intervals of ten seconds, each showing on bursting orange smoke;

(*b*) by night: a series of projectiles discharged at intervals of ten seconds, showing on bursting orange lights or stars.

Provided that, when the authority who desires to prescribe the change of course referred to in this rule is able to establish a radio-electric communication with the aircraft, this order may be given by using the means of communication established.

SECTION III.

GENERAL RULES FOR AIR TRAFFIC.

112. *General.*—(1) Subject to the provisions of sub-rule (6) of this rule and clause (1) of rule 116, mechanically driven aerodynes shall always give way to non-mechanically-driven aerodynes and to aerostats, and mechanically-driven aerostats to non-mechanically-driven aerostats and aerodynes.

(2) An airship which is under way and which is not under control (or which has voluntarily stopped its engines) shall, for the application of the rules in Section III, be classed as a free balloon.

113. *Risk of collision.*—(1) When circumstances permit, an aircraft can ascertain risk of collision with another aircraft by carefully watching the successive compass bearings and angles of elevation of the latter. It shall consider that risk of collision with this other aircraft exists if neither the bearing nor the angle of elevation changes appreciably and if the distance between the two aircraft diminishes.

The term "risk of collision" includes all risk of accident due to undue proximity of other aircraft.

(2) Every aircraft which is required by these Rules to give way to another to avid collision, shall keep a safe distance, having regard to the circumstances of the case.

(3) While observing the provisions relative to risk of collision contained in sub-rules (1) and (2), a mechanically-driven aircraft must always manœuvre according to the provisions of sub-rules (4) and (8), as soon as it is apparent that, if it pursued its course, it would not pass clear of another aircraft.

(4) When two mechanically-driven aircraft are meeting end on or nearly end on, each shall, without prejudice to the application of the provisions of sub-rule (1), alter its course to the right.

(5) Subject to the application of the provisions of sub-rule (1) of of this rule and sub-rule (3) of rule 116, when two mechanically-driven aircraft are on courses which cross, the aircraft which has the other on its own right side shall keep out of the way of the other.

(6) An aircraft overtaking any other shall keep out of the way of the overtaken aircraft by altering its own course to the right, and must not pass by diving.

Every aircraft coming up with another aircraft from any direction more than 110 degrees from ahead of the latter, *i.e.*, in such a position with reference to the aircraft which it is overtaking that at night it would be unable to see either of that aircraft's side lights, shall be deemed to be an overtaking aircraft, and no subsequent alteration of the bearing between the two aircraft shall make the overtaking aircraft a crossing aircraft within the meaning of these rules, or relieve it of the duty of keeping clear of the overtaken aircraft until it is finally past and clear.

As by day the overtaking aircraft cannot always know with certainty whether it is forward or abaft the direction mentioned above from the other aircraft, it should, if in doubt, assume that it is an overtaking aircraft and keep out of the way.

(7) Every aircraft which is obliged by the rules in Part XII to keep out of the way of another aircraft shall, if the circumstances of the case admit, avoid passing over or under the other, or crossing ahead of it.

(8) Where, by any of the rules in Part XII, one of two aircraft is to keep out of the way, the other shall keep its course and speed. When, however, in consequence of thick weather or any other cause, the aircraft having the right of way finds itself so close that collision cannot be avoided by the action of the giving-way aircraft alone, it shall take such action as will best aid to avert collision.

(9) Every aircraft in a cloud, fog, mist or other conditions of bad visibility, shall proceed with caution, having careful regard to the existing circumstances.

(10) Every aircraft flying beneath clouds shall always do so, so far as it is safe and practicable, at such a distance below the clouds as will enable it readily to see and be seen.

114. *Risk of collision on air traffic routes.*—In order to obviate the increased risk of collision which exists on air traffic routes the following provisions shall be observed by aerodynes and airships when flying on or in the vicinity of such routes, namely:—

(1) An aircraft flying by compass along the straight line (rhumb line) joining two points on an air traffic route in common use, shall keep such line at least 1,000 yards on its left.

(2) An aircraft following, either an officially recognised air traffic route, or a route frequented by aircraft and indicated on the ground by a line of landmarks such as a road, railway, river, canal, coastline, etc., shall keep such route at least 300 yards on its left.

(3) An aircraft shall not fly keeping on its right any of the lines or routes referred to in rule 114, except at a distance therefrom sufficient to avoid aircraft following such lines or routes in accordance with the said rule.

(4) An aircraft crossing one of the lines or routes referred to in rule 114 shall cross it at right angles as rapidly as possible.

(5) In the case of pre-arranged flights in group formation, the aircraft of the leader of the group shall lead the flight in such a manner that every aircraft in the group can comply with rule 114.

115. *Position of pilot.*—To facilitate the application of the rules for air traffic contained in this Part, the pilot of a mechanically-driven aerodyne shall, save in exceptional circumstances, be placed either in the plane of symmetry of the aerodyne or on the left-hand side of such plane.

SECTION IV.

SPECIAL RULES FOR AIR TRAFFIC ON AND IN THE VICINITY OF ALL AERODROMES.

116. *Special rules.*—The following provisions shall apply on and in the vicinity of all aerodromes, namely:—

(1) Aircraft about to land on an aerodrome shall be given free way.

(2) An aircraft about to take off shall not attempt to do so until there is no risk of collision with another aircraft.

(3) In the case of two mechanically-driven aerodynes approaching an aerodrome for the purpose of landing, the aerodyne flying at the greater height shall be responsible for avoiding the aerodyne at the lower height, but the latter shall, if the contingency arises, comply with the provisions of sub-rule (6) of rule 113.

SECTION V.

SPECIAL RULES FOR AIR TRAFFIC ON AND IN THE VICINITY OF AERODROMES OPEN TO PUBLIC USE.

A. GENERAL.

117. *Extent of application.*—(1) The provisions of Section V shall apply on and in the vicinity of aerodromes open to public use. They concern only land and water aerodromes for mechanically-driven aerodynes, which are designated in the present Section by the single word "aerodynes".

(2) Non-mechanically-driven aerodynes on and in the vicinity of aerodromes open to public use shall comply with the provisions of Section V as far as possible.

118. *Exemptions.*—The Governor General in Council may by special order in writing in this behalf temporarily suspend the application of all or any of the provisions of Section V with reference to any aerodromes in British India which is open to public use. Where any

such order is for the time being in force with respect to any aerodrome the suspension shall be indicated by the appropriate signals provided for in sub-rule (3) of rule 105.

119. *Neutral zones.*—At land aerodromes, a neutral zone, situated along the perimeter of the landing area and at the approaches to the hangars, may be set apart for aerodynes manœuvring on the ground.

B. FLIGHT OVER OR IN THE VICINITY OF THE LANDING AREA.

120. *Minimum Flying altitude.*—Subject to any special local regulations which may exist:

(*a*) flight over a landing area at a lower height than 2,000 feet is prohibited for aerodynes, save in the case of a departure or landing.

(*b*) every aerodyne flying outside a landing area at a distance of less than 2,000 yards from the nearst point of such area shall, unless it is flying at a greater height than 2,000 feet, keep the landing area on its left.

121. *Aerial acrobatics.*—Aerodynes are prohibited from engaging in aerial acrobatics in the vicinity of aerodromes, at a distance of less than two miles from the nearest point of the perimeter of the aerodrome, unless they are flying at a greater height than 6,000 feet.

122. *Landings by radioelectric guide.*—When an aerodyne is about to land by means of a radioeletric guide, other aerodynes, in order to avoid collision, must conform to any local rules in force which may be applicable or, in default of such rules, fly as low as possible below the clouds.

123. *Fixed balloons and kites.*—No fixed balloon or kite shall be elevated in the vicinity of an aerodrome without a special authorisation.

C. RULES TO BE OBSERVED FOR DEPARTURES AND LANDINGS.

124. *Circuits.*—An aerodyne starting from or about to land on an aerodrome shall make a circuit or partial circuit and the turning shall be made clear of the landing area and shall be left-handed (anti-clockwise), so that during such circuit the landing area shall always be on its left.

As an exception, the turning shall be right-handed when the signal indicated in sub-rule (4) of rule 105 is displayed.

125. *Direction of take-off or landing.*—(1) Every aerodyne taking off from or landing at an aerodrome shall do so upwind, except when the natural conditions of the aerodrome do not permit. If, however, there is a landing T as provided for in clause (b) of sub-rule (1) of rule 105, or a line of lights as provided for in sub-clause (ii) of clause (*d*) of sub-rule (2) of rule 106, the aerodyne shall take off or land in the direction indicated by this T (*i.e.*, by following the direction of the long arm of the T towards the cross arm of that T) or by the line of lights.

(2) Landings shall be preceded by a descent in a straight line, commencing at least 300 yards outside the perimeter of the landing area.

(3) Every aerodyne landing at an aerodrome shall leave clear on its left any aerodyne which has already landed or is already landing, or which is taking off or about to take off.

(4) Every aerodyne taking off from an aerodrome shall leave clear on its left any aerodyne which is already taking off.

(5) In observing the provisions of rule 125, every aerodyne, when landing or taking off, shall leave a reasonable space on its right for other aerodynes to land or take off.

(6) At an aerodrome, taking off or landing simultaneously by two or more aerodynes, unless pre-arranged, is prohibited.

(7) For the purposes of rule 125, two or more aerodynes taking off or landing simultaneously by pre-arrangement shall be regarded as a single aerodyne.

126. *Zones for landings and departures.*—(1) By way of exception, at certain aerodromes, the landing area may be regarded as divided into two approximately equal zones, by a vertical plane bearing in the direction of departure and landing defined in sub-rule (1) of rule 125. For an observer facing in the direction towards which departures and landings are to be made, the zone on the right will be the one reserved for landings and the zone on the left the one reserved for departures. This special arrangement must be indicated by the signal provided for in sub-rule (2) of rule 105.

(2) Every aerodyne landing at one of these aerodromes shall do so in conformity with the provisions of sub-rules (1) and (2) of rule 125, as far as possible to the left in the zone reserved for that purpose, but leaving clear on its left any other aerodyne which has already landed or which is landing.

(3) Every aerodyne taking off from one of these aerodromes shall do so in conformity with the provisions of sub-rule (1) of rule 125, as far as possible to the left in the zone reserved for that purpose, but leaving clear on its left any other aerodynes which are already taking off.

127. *Take-offs.*—On land aerodromes having a ground control, no aerodyne having proceeded on to the landing area with the intention of taking off shall take off until it has received permission to do so by the signals prescribed in clause (b) of sub-rule (1), and clause (b) of sub-rule (2), of rule 108.

D. RULES TO BE OBSERVED FOR MANOEUVRES ON THE GROUND.

128. (1) *Land aerodromes.*—Every aerodyne moving on the ground in the landing area shall normally do so in the direction of landing. It may, however, in order to shorten its course, cross the landing area to reach its take-off point or the boundary, provided that, in the course of such movement, turns are always made to the left, that it gives free way to every aircraft leaving or landing, and that it conforms to the provisions of sub-rules (4) and (8) of rule 113.

(2) *Water aerodromes.*—The rules for land aerodromes contained in sub-rule (1) of this rule apply equally to water aerodromes, subject however to the provisions contained in rule 129.

(3) On aerodromes having a ground control, in addition to the observance of the provisions of sub-rules (1) and (2) of this rule, no aerodyne shall proceed on to the landing area until it has received permission to do so by the signal prescribed in clause (a) of sub-rule (1), or clause (a) of sub-rule (2), of rule 108.

SECTION VI.

RULES RELATING TO AIRCRAFT ON THE SURFACE OF THE WATER.

129. *Regulations for preventing collisions at sea.*—Every aircraft manœuvring under its own power on the water shall conform to the regulations for preventing collisions at sea, and for the purposes of these regulations shall be deemed to be a steam-vessel:

Provided that—

(*a*) in conforming with the above-mentioned regulations, it shall be borne in mind that steam-vessels in narrow channels are not able to manœuvre so as to avoid collision with aircraft;

(*b*) the aircraft shall carry only the lights specified in Section I of this part, and not those prescribed for steam-vessels in the regulations for preventing collisions at sea; it shall use the sound signals specified in the above-mentioned regulations only as specified in rule 103 and clause (d) of sub-rule (2) of rule 107; and it shall not be deemed to hear any sound signals.

SECTION VII.

MISCELLANEOUS PROVISIONS.

130. *Ballast.*—The dropping of ballast other than fine sand or water from aircraft in the air is prohibited.

131. *Observance of general and special rules for air traffic.*—In conforming with the provisions of Sections III, IV and V of this Part, due regard shall be had to all dangers of navigation and collision and to any special circumstances which may render a departure from these rules necessary in order to avoid immediate danger.

132. *Neglect in the use of lights or signals, etc.*—Nothing in this Part shall exonerate any aircraft, or the owner, pilot or crew thereof, from the consequences of any neglect in the use of lights or signals, or of any neglect to keep a proper lookout, or of the neglect of any precaution which may be required by the ordinary practice of the air, or by the special circumstances of the case.

133. *Special orders relative to navigation of aircraft in the immediate vicinity of an aerodrome.*—Nothing in this Part shall interfere with the operation of any special rule or rules approved by the Governor General in Council and published relative to navigation of aircraft in the immediate vicinity of any aerodrome or other place, and it shall be obligatory on all owners, pilots, or crews of aircraft to obey such rules.

PART XIII.—GENERAL.

134. *Inspection.*—Any person authorised by the Governor General in Council by special or general order in writing in this behalf may—

(*a*) at all reasonable times enter any place to which access is necessary for the purpose of exercising his powers or carrying out his duties under these rules;

(*b*) at all times during working hours enter that portion of any factory or place in which aircraft or parts of aircraft or aero engines or parts of aero engines are being manufactured, overhauled, repaired or assembled and inspect any such factory or place, aircraft, aero engines or parts and any drawings relating to such aircraft, aero engines or parts;

(*c*) at any time inspect any flying machine which is required by these rules to be certified as airworthy or in respect of which a certificate of airworthiness is in force;

(*d*) enter, inspect and search any aircraft for the purpose of securing compliance with any of these rules.

135. *Forgery, etc., of documents.*—No person shall fraudulently lend any licence or certificate issued under these Rules or allow it to be used by any other person.

136. *Foreign Military Aircraft.*—No person shall fly or land, or assist in flying or landing, any foreign military aircraft over or in British India except on or with the invitation or permission in writing of the Governor General in Council, and on such conditions as may be specified in the invitation or permission.

137. *Obstruction of authorised persons.*—No person shall voluntarily obstruct any person acting in the exercise of his powers or in the discharge of his duties under these Rules.

138. *General power to exempt.*—The Governor General in Council may by general or special order in writing exempt any aircraft or class of aircraft or any person or class of persons from the operation of these rules, either wholly or partially, subject to such conditions, if any, as may be specified in such order.

139. *Penalties.*—(1) Any person contravening any of these rules shall, where no punishment is provided for such contravention in the Indian Aircraft Act, 1934 (XXII of 1934), be punishable to the extent laid down in Schedule VI to these rules.

(2) It shall be a defence to any proceedings for contravention of or failure to comply with, these rules if the contravention or failure is proved to have been due to accident, stress of weather or other unavoidable cause; and it shall be a defence to any proceedings under these rules against the owner, hirer, operator, pilot or commander of an aircraft that the alleged contravention took place without his actual fault or privity.

SCHEDULE I.

(See rule 12.)

Areas over which flight by aircraft is prohibited.

Area.	Extent of prohibition.
(1) The area included within a radius of one mile from the Towers of Silence on Malabar Hill, Bombay. (2) The North-West Frontier Province and the Political Agencies and tribal areas under the charge of the Governor of the North-West Frontier Province in his capacity of Agent to the Governor General. (3) All territory in British Baluchistan and Baluchistan Agency Territories comprised within the following areas :— (*a*) The District of Zhob .. (*b*) That part of the Districts of Sibi and Loralai lying to the north of the parallel of latitude passing through Kach. (*c*) The Quetta-Pishin District with the exception of territory lying to the south and east of the railway line from Kach through Bostan and Quetta to Spezand, and with the exception of territory lying within a radius of 15 miles from Quetta railway station. (*d*) That part of the District of Chagai lying to the north of the railway line from Spezand through Nushki and Dalbandin to Duzdap and all territory lying south of the railway within 20 miles of the Persia-Baluchistan Frontier.	Absolute.

Note.—These areas are shewn on a map which may be obtained on application to the Director of Civil Aviation in India, Simla/New Delhi.

SCHEDULE II.

(See rule 41.)

Proofs of Competency, Tests and Examinations for the Issue and Renewal of Licences to Aircraft Personnel.

Personnel.

The qualifications of which proofs are required from applicants for licences or renewal of licences are as set out below :—

SECTION A.—PRIVATE PILOT'S LICENCE ("A" LICENCE) (FLYING MACHINES).

1. *Flying Experience.*—An applicant for the grant of a licence or the renewal of a licence shall be required to produce evidence or having

carried out, during the six months immediately preceding the date of the application, not less than five hours solo flying.

2. *Flying Tests.*—(1) An applicant for the grant of a licence shall be required to carry out the following tests to the satisfaction of the examiners:—

(*a*) Tests for altitude and gliding flight: Two flights each finishing with a glide, the engines being completely throttled down at not less than 2,000 feet above the landing area. The landings shall be made without reopening the throttle and within 150 yards of a point fixed beforehand by the official examiners of the test.

(*b*) Test of skill: A flight around two posts (or buoys) situated 500 yards apart making a series of five figure-of-eight turns, each turn reaching one of the two posts (or buoys). This flight shall be made at an altitude of not more than 600 feet above the ground (or water) without touching the ground (or water). The landing shall be effected by:—

(i) finally closing the throttle of the engine at latest when the aircraft touches the ground (or water);

(ii) finally stopping the flying machine without the use of brakes within a distance of 50 yards from a point fixed by the candidate before starting.

(*c*) Spinning test: A left hand and right hand spin. During this test the examiner shall be on board. The test shall be undertaken at such a height that normal flight is resumed after the spin at a height of not less than 2,000 feet above the ground.

(2) An applicant for the renewal of a licence who has not had the recent flying experience laid down in paragraph 1 of this Section shall carry out the following tests to the satisfaction of the examiner:—

(*a*) Test of skill: Three figure of eight turns in accordance with sub-paragraph (1) of this paragraph.

(*b*) Landing test: Three landings, finally stopping the aircraft on each occasion without the use of brakes within a distance of 50 yards from a point fixed by the applicant before starting.

(3) An applicant for the addition to his licence of a different type of aircraft may be required to carry out any of the foregoing tests and shall normally be required to carry out the landing test detailed in clause (*b*) of sub-paragraph (2).

3. *Technical Examination.*—An applicant for the grant of a licence shall be required to pass, to the satisfaction of the examiners, an examination in the following subjects:—

(*a*) Rules as to Lights and Signals; General Rules for Air Traffic; Special Rules for Air Traffic on and in the vicinity of aerodromes open to Public use.

(*b*) International Air Legislation, with particular reference to the obligations of a pilot in international flights.

(*c*) General knowledge of, in so far as they affect the responsibilities of a pilot the rules made under the Indian Aircraft Act, 1934 (Act XXII of 1934), and Notices to Airmen.

4. *Medical Examination.*—(1) The medical examination shall be carried out by a medical practitioner who possesses qualifications entitling him to inclusion in the Medical Register of Great Britain, and who may be the applicant's usual medical attendant. Such examination shall be conducted in accordance with such form as may be prescribed by the Governor General in Council and a copy of that form, completed as required, shall be forwarded by the medical officer to the Director of Civil Aviation, Simla/Delhi, by whom copies of the form will be supplied on demand.

(2) The medical examination shall be based upon the following requirements of mental and physical fitness:—

(*a*) Good family and personal history, with particular reference to nervous stability, as to which information shall be given in a statement made and signed by the applicant and satisfactory to the medical examiner.

(*b*) *General surgical examination.*—The applicant must neither suffer from any wound or injury nor have undergone any operation, nor possess any abnormality, congenital or acquired, which might interfere with the safe handling of a private flying machine under ordinary conditions. Palpation of the abdomen and abdominal viscera, particularly the pyloric, vesicular duodenal and appendicular regions, whenever it reveals any swelling or distinct pain, must be completed by a radioscopic and radiographic examination.

Any anatomical lesion in the walls of any part whatever of the digestive tube, any stricture of its calibre, any calculus or foreign body, any peritoneal lesion, established by clinical or laboratory examinations, will entail rejection. Exception may be made for spasmodic strictures not accompanied by other troubles and for ptoses compensated by a good abdominal musculature.

An applicant who has undergone a surgical intervention in the biliary passages or the digestive tube, except appendicitis, involving a total or partial excision or a diversion of any of these organs, shall be declared unfit unless (i) a period of two years has elapsed since the surgical intervention and the effects of the operation are not considered liable to cause sudden incapacity in the air, or (ii) an attestation made by a surgeon, having knowledge of the nature of the disease which necessitated the operation, certifies that no immediate or future consequences are to be feared.

Diseases of the liver (including those of the biliary passages) and of the pancreas shall in cases where it is deemed necessary be verified by laboratory examination, particularly by radiography as well as by an examination of the blood and of the urine, and shall entail rejection only if they afford indication of the existence of a calculus, tumour or lesion involving a persistent impairment of function of these organs.

(*c*) *General Medical Examination.*—The applicant must not suffer from any disease or disability which renders him liable suddenly to become incompetent in the management of aircraft. He must possess heart, lungs and nervous system in a state to withstand the effects of altitude. He must be free from kidney disease, and must not present any clinical sign of syphilis, nor have any cardiac lesion.

(*d*) *Eye Examination.*—The applicant must possess, with correction by glasses if necessary, a visual acuity equal to at least 70 per cent. of the normal visual acuity for each eye taken separately. Visual acuity shall be measured by means of standard test types (optotypes) powerfully illuminated in such manner that the light does not shine directly into the eyes of the examinee. Binocular vision, ocular poise, ocular mobility, the field of vision of each eye and colour perception must be normal. With regard to colour perception, a candidate suffering from daltonism may however be accepted under the following conditions:—

(i) if he is unable to distinguish pigmentary colours but is able to distinguish the coloured lights used in air navigation, his licence is rendered valid both for flight by night and for flight by day;

(ii) if he is unable to distinguish either pigmentary colours or the coloured lights used in air navigation, his licence is rendered valid only for flight by day, that is to say, between sunrise and unset.

(*e*) *Ear Examination.*—The middle ear must be healthy. The applicant must possess an auditory acuity not less than that corresponding with the perception of the whispered voice at one metre. The vestibular mechanism must be intact and not hyper-sensitive. It must be equal on both sides.

(*f*) *Nose, Throat and Mouth Examination.*—The applicant must possess free tubular air entry on both sides:

Provided that a person who does not satisfy the whole of the above medical requirements may, at the discretion of the Governor General in Council, be accepted, so far as such requirements are concerned, as eligible for the renewal of a licence, or for the issue of a licence if he has previously been found medically fit for flying:

Provided also that a person who does not satisfy all the above medical requirements may, at the discretion of the Governor General in Council, be accepted as eligible for the issue of a licence subject to such limitations as the Governor General in Council may impose and on the condition that the licence shall in no case be valid for flight outside India.

(3) The medical examination shall take place before the commencement of flying instruction in the case of an application for the issue of a licence, and, in the case of an application for renewal of a licence, not earlier than 15 days before the date of expiry of the validity of the licence.

(4) Every applicant who presents himself to undergo the medical examination required for the issue or renewal of a licence must furnish to the medical examiner a declaration signed by him stating whether he has previously undergone such a medical examination, and with what result. A false declaration shall render the applicant liable to the cancellation of any licence issued or renewed to him as the result of the examination.

SECTION B.—PILOT'S "A—1" LICENCE (FLYING MACHINES).

1. *Flying experience.*—(1) An applicant for the original endorsement of a licence shall be required to produce evidence of having carried out during the two years preceding the date of application not less than 100 hours solo flying (including not less than 30 landings) of which not less than 15 hours shall have been performed during the preceding six months, and of which not less than 25 hours shall consist of cross country flights:

Provided that, except in a case where the Governor General in Council is satisfied that the experience of the applicant as a pilot is sufficiently long and varied as to constitute equivalent experience, an applicant for the endorsement of his licence in respect of a type of flying machine fitted with two or more engines, shall be required to produce evidence of having carried out not less than 10 hours flying on a multi-engined flying machine either as first pilot or as second pilot.

(2) An applicant for the renewal of the endorsement of his licence shall be required to produce evidence of having carried out during the preceding six months not less than 10 hours solo flying.

2. *Flying Tests.*—(1) An applicant for the original endorsement of a licence shall be required to carry out the following tests to the satisfaction of the examiner:—

(*a*) Single-engined flying machines—General flying for half an hour with an examiner on board and including three landings.

(*b*) Multi-engined flying machines—General flying for half an hour with an examiner on board, during which the aircraft shall be flown with each engine in turn completely throttled down and during which three landings shall be made. Part of this flying shall be carried out with the aircraft light and part with the aircraft fully loaded.

(*c*) A cross country or oversea flight of at least 200 miles with an examiner on board and including three forced landings at points selected by the examiner. During this flight a height of 6,500 feet shall be maintained for a total period of one hour. The applicant will at the time of departure be informed of his route and furnished with the appropriate map. The examiner will judge whether the route has been correctly followed.

(2) An applicant for the endorsement of his licence in respect of an additional type of flying machine shall be required to carry out to the satisfaction of the examiner three landings with the aircraft light and three landings with the aircraft fully loaded:

Provided that an applicant for the addition to the endorsement on his licence for the first time of a type of flying machine with two or more engines shall be required to carry out the general flying test specified in clause (*b*) of sub-paragraph (1) of this paragraph.

(3) An applicant for the renewal of a licence who has not had the recent flying experience specified in sub-paragraph (2) of paragraph (1) shall be required to carry out the general flying tests laid down in sub-paragraph (1) of this paragraph and may also be required to carry out the other tests laid down in sub-paragraph (1) of this paragraph.

3. *Technical Examination.*—(1) An applicant for the issue of a licence shall be required to pass, to the satisfaction of the examiners, an examination in the following subjects:—

Group I.

(*a*) Flying machines: Theoretical knowledge of the laws of resistance of the air especially as concerns its effect on main plane structure, tail unit and air-screw; functions of the different parts of flying machines and of the controls. Assembling of flying machines and their parts. Practical tests on rigging. Centre of gravity and loading. Principles of inspection and tests.

(*b*) Engines: General knowledge of internal combustion engines and the functions of the component parts; general knowledge of the construction, assembling, adjustment and characteristics of aero-engines; fuel and oil consumption and effect on range of aircraft; principles of inspection and tests. Causes of the faulty running of engines and of breakdown; practical tests in running repairs.

(*c*) Instruments: Principles and use of instruments prescribed for flying machines.

Group II.

(*d*) As set out in paragraph 3 of Section A for an applicant for Pilot's "A" Licence.

(*e*) Elementary Navigation: Map reading and use of maps, care, use and compensation of the compass, determination of position and drift.

(2) The examination in flying machines and engines shall have reference to the particular types of flying machines or engines which are to be endorsed on the licence. The applicant may be required to undergo a further examination with reference to other types of flying machines and engines before the licence is endorsed for such other types.

(3) An applicant who fails to pass in any group shall be permitted to reappear not more than twice for examination in that group:

Provided that an applicant who does not pass in all groups of the technical examination within a period of six months from the date of the first examination shall be required to undergo the complete examination again.

4. *Medical Examination.*—The medical examination shall be based on the same requirements and shall be undertaken under the same conditions as set out in paragraph 4 of Section C for an applicant for Pilot's "B" Licence.

SECTION C.—PILOT'S "B" LICENCE (FLYING MACHINES).

1. *Flying Experience.*—(1) (*a*) An applicant for the grant of a licence shall be required to produce evidence of having carried out during the three years preceding the date of application not less than 200 hours solo flying (including not less than 30 landings) of which not less than 15 hours shall have been performed during the preceding six months, and of which not less than five hours shall have been performed by night.

(*b*) The applicant's flying experience shall include a minimum of 75 hours cross country flying, of which at least 5 hours shall consist of cross country flights carried out at night.

(*c*) Except in a case where the Governor General in Council is satisfied that the experience of the applicant as a pilot is sufficiently long and varied as to constitute equivalent experience, an applicant for a licence in respect of a type of flying machine fitted with two or more engines shall be required to produce evidence of having included in the flying experience specified in this sub-paragraph not less than 10 hours solo flying on a multi-engined flying machine:

Provided that flying experience as the holder of an "A-1" licence while employed as second pilot in a flying machine fitted with dual control employed in air transport operations may be accepted in lieu of the solo flying experience specified in this paragraph but each hour of such experience shall count as half an hour of solo flying experience.

(2) An applicant for the renewal of a licence shall be required to produce evidence of having carried out during the preceding six months not less than 10 hours solo flying.

2. *Flying Tests.*—(1) An applicant for the grant of a licence shall be required to carry out the following tests to the satisfaction of the examiners:—

(*a*) *Altitude, gliding flight, skill and spinning tests.*—The same tests as are laid down in sub-paragraph (1) of paragraph 2 of Section A for a Pilot's "A" Licence:

Provided that of such tests an applicant who is in possession of a valid Pilot's "A" Licence shall be required to pass the spinning test only.

(*b*) *Tests of navigation.*—Two cross country or oversea flights of at least 200 miles each. As regards one of these, the flight shall be made in the same aircraft within eight hours, shall include two obligatory landings (when the machine must come to rest at points, other than the point of departure, fixed beforehand by the examiners) and shall terminate with a landing at the point of departure. During this flight a height of at least 6,500 feet shall be maintained for a total period of one hour. Provided that an applicant who is in possession of valid Pilot's "A-1" Licence may be exempted from this flight. On the second flight the examiner shall be on board and three forced landings shall be made at points selected by the examiner.

As regards both flights the applicant shall at the time of departure be informed of his route and furnished with the appropriate map. The examiners will judge whether the route has been correctly followed.

(*c*) *General Flying.*—(i) Single-engined flying machines. General flying for about half an hour with an examiner on board and including three landings.

(ii) Multi-engined flying machines. General flying for half an hour with an examiner on board during which the aircraft shall be flown with each engine in turn completely throttled down and during which three landings shall be made. Part of this flying shall be carried out with the aircraft light and part with the aircraft fully loaded.

(*d*) *Night Flight.*—(i) A night flight of at least one hour carried out away from the aerodrome of departure at a height of at least 1,500 feet.

(ii) Three landings of which at least two shall be made without the aid of a floodlight. Flares on the landing area may be used.

These flights shall be made between two hours after sunset and two hours before sunrise, on a dark night. The aircraft used for these tests shall be equipped with approved lighting equipment for effecting night landings.

(*e*) *Blind flying.*—A flight of not less than one hour in duration in the course of which the applicant, under the supervision of an examiner appointed by the Governor General in Council, shall without exterior view satisfactorily perform the following operations:—

(i) Calculate and fly at least three different courses of not less than 15 miles each on directions given by the examiner stating the point of departure and point to be flown to.

(ii) Carry out all ordinary manœuvres and enter and recover from a spin:

Provided that the Governor General in Council may at his discretion exempt from this test an applicant who produces satisfactory evidence of having had experience in or of having completed a recognised course of training in instrument flying.

(2) An applicant for the endorsement of his licence in respect of an additional type of flying machine shall be required to carry out, to the satisfaction of the examiner, three landings with the aircraft light and three landings with the aircraft fully loaded:

Provided that an applicant for the addition to his licence for the first time of a type of flying machine with two or more engines shall be required to carry out the general flying test prescribed in sub-clause (ii) of clause (*c*) of sub-paragraph (1) of this paragraph.

(3) (i) An applicant for the renewal of a licence, who has not had the recent flying experience specified in sub-paragraph (2) of paragraph 1, shall be required to carry out the general flying test laid down in sub-clause (i) of clause (*c*) of sub-paragraph (1) of this paragraph, but may be required to carry out any of the other tests laid down in sub-paragraph (1) of this paragraph.

(ii) An applicant for the renewal of a licence whose total night flying experience does not exceed 30 hours shall be required to pass the test laid down in sub-clause (ii) of clause (*d*) of sub-paragraph (1) of this paragraph.

3. *Technical Examination.*—(1) An applicant for the grant of a licence shall be required to pass, to the satisfaction of the examiners, an examination in the following subjects:—

Group I.

(*a*) Flying machines: Theoretical knowledge of the laws of resistance of the air especially as concerns its effect on main plane structure, tail unit and airscrew; functions of the

different parts of the flying machine and of the controls. Assembling of flying machines and their parts. Practical tests on rigging. Centre of gravity and loading principles of inspection and tests.

(*b*) Engines: General knowledge of internal combustion engines and the functions of the component parts; general knowledge of the construction, assembling, adjustment and characteristics of aero engines; fuel and oil consumption and effect on range of aircraft; principles of inspection and tests. Causes of the faulty running of engines and of breakdown; practical tests in running repairs.

(*c*) Instruments: Principles and use of instruments prescribed for flying machines, including blind flying instruments:

Provided that an applicant who is in possession of a valid Pilot's "A-1" Licence may be exempted from the examination in the subjects mentioned in this Group.

Group II.

(*d*) Elementary Navigation: Map reading and use of maps; compass, care, use and compensation; principles of dead reckoning navigation and the instruments in common use; principles of navigation by radio-goniometry.

(*e*) Rules as to Lights and Signals; General Rules for Air Traffic, Special Rules for Air Traffic on and in the vicinity of aerodromes open to Public Use; Rules for Preventing Collisions at Sea.

(*f*) Practical knowledge of the special conditions of air traffic and of international air legislation. General knowledge, in so far as they affect the responsibilities of a pilot, of the rules made under the Indian Aircraft Act, 1934 (Act XXII of 1934), and Notices to Airmen.

Group III.

(*g*) Elementary Meteorology.

(2) The examination in flying machines and engines shall have reference to the particular types of flying machines or engines which are to be endorsed on the licence. The applicant may be required to undergo a further examination with reference to other types of flying machines and engines before the licence is endorsed for such other types.

(3) An applicant who fails to pass in any of the groups shall be permitted to reappear not more than twice for examination in those groups:

Provided that an applicant who does not pass in all groups of the technical examination within a period of six months from the date of the first examination shall be required to undergo the complete examination again.

4. *Medical Examination.*—(1) The medical examination shall be conducted by medical officers specially approved for the purpose by the Governor General in Council, and shall be based on the following requirements of mental and physical fitness:—

(*a*) Preliminary: The applicant must have the complete use of his four limbs, must not be completely deprived of the use of either eye and must be free from any active or latent, acute or chronic, medical or surgical, disability, or infection. He must be free from any injury or wound which would entail any degree of functional incapacity which might interfere with the safe handling of aircraft at any altitude even in the case of prolonged or difficult flight. He must be completely free from hernia, must not suffer from any detectable sensory lesion, and must be free from a history of morbid mental or nervous trouble.

The applicant will be questioned concerning his family and personal history.

(*b*) Examination of the Nervous system: The examination of the nervous system of the applicant shall comprise a full inquiry into family and personal history. The information obtained shall be given in a statement made and signed by the applicant and accompanied, if possible, by a certificate in regard especially to losses of consciousness, fits and convulsions of all kinds, from the applicant's ordinary medical adviser or a responsible person who has known him for a long time. This statement and this certificate must be such as to satisfy the examining medical officer. The applicant must not present any mental or trophic impairment, pathological tremor, or presumptive evidence of latent epilepsy. Motility, sensibility, tendinous, cutaneous and pupillary reflexes, co-ordination of movements and cerebellar functions, must be normal. An exception may be made for local peripheral trouble due to accidental section of a nerve branch.

Fractures of the cranium involving the internal table of the cranial box, even without apparent impairment, will entail temporary unfitness during a period of two years from the date of the fracture. Any presumed nervous syphilis will entail rejection, unless the non-existence of such an impairment is proved by an examination of the blood and an examination of the cerebrospinal fluid, made with the consent of the applicant.

(*c*) *General surgical examination.*—The requirements of this examination shall be the same as those laid down in clause (*b*) of sub-paragraph (2) of paragraph 4 of Section A for an applicant for a Pilot's "A" licence, with the addition that the applicant must neither suffer from any wound or injury, nor have undergone any operation, nor possess any abnormality, congenital or acquired, which might interfere with the safe handling of a flying machine at any altitude even in the case of prolonged or difficult flight.

(*d*) *General Medical Examination.*—The applicant must not suffer from any disease or disability which renders him liable

suddenly to become incompetent in the management of aircraft. His muscular power must be adequate for handling of the types of aircraft he will have to pilot or the apparatus he is to use. He must not have any signs of aneurism of the large arterial trunks, nor have any cardiac lesion, even if well compensated; the heart must be normal, with normal function, and only respiratory arrhythmia, increase of pulse rate from excitement of exercise and a general slow pulse not associated with auriculo-ventricular dissociation will be allowed. The applicant must not suffer from any acute disability of the lungs, nor possess any cicatricial lesion of the lungs, and must be free from tuberculosis capable of being diagnosed by the usual clinical methods, from trace-bronchial disease of the glands, and from pulmonary emphysema, even if slight. However, with regard to the maintenance of the applicant's efficiency, pulmonary emphysema will entail rejection only when the pulmonary capacity falls below three and half litres at rest after full exhalation and inhalation and when the duration of the breath holding falls at rest below fifty seconds, or only forty seconds if the candidate is less than 5 feet or is of the female sex. In addition, each examination shall include a radioscopic record in doubtful clinical cases. When the examination of the spleen and of the ganglionic tracts reveals hypertrophy of these organs, the candidate shall be declared unfit unless a hematological examination has shown that it is not a case of an original impairment of the hemotopoietic organs. Hemoglobinary, hemophily and purpuras shall also entail rejection, unless hematological examination shows that it is a case of only transitory impairment. The applicant must not present any signs of organic disease of the kidneys; these latter must be insensitive to palpation and of normal size. Renal ptosis shall entail rejection; this rule, however, shall not apply as regards the maintenance of efficiency if no functional trouble is involved. The urine must not contain any pathological element. Affections of the urinary passages and of the genital organs, even blennorrhoea, may entail temporary or definite unfitness, an exception being allowed as regards the maintenance of efficiency in the case of tuberculous orchi-epididymitis in its mild and localised form.

Applicants of the female sex must present a normal uterus and appendages. Cases in which surgical intervention has taken place shall be considered individually. Any presumed pregnancy shall entail rejection. Following confinement or miscarriage, the holder of a licence shall be allowed to resume her air duties only after having undergone a fresh medical examination.

The applicant must not present any clinical signs of syphilis. Dysentery shall be considered as an acute disease; provided that a presumption of dysenteric infection shall entail rejection, unless the medical examiner considers that the clinical phenomena have disappeared.

(e) *Eye Examination.*—The applicant must possess a degree of visual acuity compatible with the efficient performance of his duties. Binocular vision, ocular poise, ocular mobility, the field of vision of each eye and colour perception must be normal.

The applicant must possess, without correction by glasses, visual acuity equal to at least 80 per cent. of the normal visual acuity for each eye taken separately, or 90 per cent. for one eye and 70 per cent. for the other, the visual acuity being measured by means of standard test types powerfully illuminated in such a manner that the light does not shine directly into the eyes of the examinee.

(f) *Ear Examination.*—The middle ear must be healthy. The applicant must possess an auditory acuity not less than corresponding with the normal perception of 64 vibrations per second, 256 vibrations per second and 4,096 vibrations per second, the forks being held perpendicularly to the ground one centimetre from the auditory tube. The vestibular mechanism must be intact and not hypersensitive; it must be equal on both sides.

(g) *Nose, Throat and Mouth Examination.*—The applicant must possess free nasal and tubal air entry on both sides and must not suffer from serious, acute or chronic affections of the buccal cavity or upper respiratory tract:

Provided that an applicant who does not satisfy the whole of the above medical requirements may at the discretion of the Governor General in Council, be accepted, as far as such requirements are concerned, as eligible for the renewal of a licence, or for the issue of a licence if he has previously been found medically fit for flying in accordance with the above requirements:

Provided further that an applicant who does not satisfy all the above medical requirements may, at the discretion of the Governor General in Council, be accepted, so far as such requirements are concerned, as eligible for the issue of a licence subject to such limitations as the Governor General in Council may impose and on the condition that the licence shall in no case be valid for flight outside India.

(2) In the case of an application for renewal of a licence the medical examination shall take place not earlier than 15 days before the date of expiry of the validity of the licence.

(3) Every applicant who presents himself to undergo the medical examination required for the issue or renewal of a licence must furnish to the medical examiner a declaration signed by him stating whether he has previously undergone such a medical examination and with what result. A false declaration shall render the applicant liable to the cancellation of any licence issued or renewed to him as the result of the examination.

SECTION D.—PILOT INSTRUCTOR'S LICENCE.

1. *Flying Experience.*—(1) An applicant for the issue of a licence shall be required to produce evidence of having carried out not less

than 500 hours solo flying, which shall be to the satisfaction of the Governor General in Council.

(2) An applicant for the renewal of a licence who has not given at least 50 hours flying tuition in the preceding 12 months, shall be required to pass the flying tests prescribed in paragraph 2 of this Section.

2. *Flying Tests.*—An applicant shall carry out such practical flying tests as may be required by the Governor General in Council or produce evidence of such qualifications as a pilot instructor as may be considered equivalent. The tests will include a demonstration by the candidate as instructor and the examiner as pupil.

3. *Technical Examination.*—An applicant shall undergo such technical examination in the principles of flying instruction as may be required by the Governor General in Council or produce evidence of such qualifications as a pilot instructor as may be considered equivalent. The examination shall include a demonstration by the candidate of his ability to lecture on any subject of examination for the Pilot's "B" licence, and shall test the candidate's knowledge of the rules made under the Indian Aircraft Act, 1934 (Act XXII of 1934), and of Notices to Airmen with particular reference to the training and licensing of pilots and the responsibilities of a pilot instructor.

4. *Medical Examination.*—The medical examination shall be based on the same requirements and shall be undertaken under the same conditions as set out in paragraph 4 of Section C, of this Schedule for a Pilot's "B" Licence.

SECTION E.—NAVIGATOR'S LICENCE.

1. *Flying Experience.*—(1) An applicant for a second class licence shall be required to produce evidence of having had at least two years air experience, during which at least 300 hours shall have been spent in the air.

(2) An applicant for a first class licence shall be required to produce evidence of having had at least four years air experience, during which at least 600 hours shall have been spent in the air, not less than 100 hours of this being experience of navigation in the air, of which not less than 15 hours shall have been obtained in connection with cross country flights made between two hours after sunset and two hours before sunrise.

(3) In this paragraph the expression "air experience" means experience as an operative member of the crew of an aircraft.

2. *Technical Examination.*—(1) An applicant for a second class licence shall be required to pass to the satisfaction of the examiners an examination on the following subjects:—

(*a*) Form of the earth; its divisions and their notation; mathematical calculation of the various elements by plane trigonometry to obtain course and distance.

(*b*) Maps and charts; how to read and use them; practical properties of different projections used in aviation.

(*c*) Compasses, their construction, use, and adjustment; elementary principles of earth's magnetism.

(*d*) Flight by dead reckoning; with the use of instruments for the measurement and calculation of the elements of the triangle of velocities.

(*e*) Navigation by radiogoniometry; methods of fixing the position of an aircraft with the application of the necessary corrections.

(*f*) International air legislation; regulations for the prevention of collisions at sea; publications for the assistance of navigators.

(*g*) Signalling; semaphore, flashing, and international code flags.

(*h*) Meteorology; knowledge of meteorological elements and observations; arrangements for the issue of meteorological reports for aviation; principles of forecasting; construction and interpretation of synoptic charts; climatology.

(2) An applicant for a first class licence shall be required to pass to the satisfaction of the examiners an examination on the following subjects:—

(*a*) Form of the earth, as in clause (*a*) of sub-paragraph (1) with the addition of mathematical calculation of various elements by spherical trigonometry (great circle courses and distances).

(*b*) Maps and charts; as in clause (*b*) of sub-paragraph (1) with the addition of the principles of construction of the different projections used in aviation.

(*c*) Tides; elementary theory and prediction by the aid of tables.

(*d*) Compasses, as in clause (*c*) of sub-paragraph (1); more advanced knowledge.

(*e*) Flight by dead reckoning, as in clause (*d*) of sub-paragraph (1).

(*f*) Navigation by radiogoniometry, as in clause (*e*) of sub-paragraph (1).

(*g*) International air legislation, etc., as in clause (*f*) of sub-paragraph (1).

(*h*) Signalling, as in clause (*g*) of sub-paragraph (1).

(*i*) Astronomical navigation; various methods of fixing the position of an aircraft, with the use and care of tables, diagrams, and instruments for the solution of this problem; knowledge of the mathematics involved.

(*j*) Meteorology, as in clause (*h*) of sub-paragraph (1); more advanced knowledge.

(3) The arrangement of subjects detailed in this paragraph shall not necessarily be that adopted in the examination where two or more subjects may be grouped into one paper. The examination shall usually be written but shall be accompanied by oral and practical tests.

3. *Medical Examination.*—The medical examination shall be conducted by medical officers specially approved by the Governor General in Council, shall be based upon the same requirements and shall be undertaken under the same conditions as set out in paragraph 4 of Section A for a Pilot's "A" Licence with the following modifications:—

(1) *General surgical examination.*—The applicant must neither suffer from any wound or injury nor have undergone any operation, nor possess any abnormality, congenital or acquired, which might interfere with the performance of his duties. The remaining conditions for this examination shall be the same as those set out in clause (*b*) of sub-paragraph (2) of paragraph 4 of Section A.

(2) *General Medical Examination.*—The applicant must not suffer from any disease or disability which might interfere with the performance of his duties. The remaining conditions for this examination shall be the same as those set out in clause (*c*) of sub-paragraph (2) of paragraph 4 of Section A.

(3) *Eye Examination.*—The applicant must possess, with correction by glasses if necessary, a visual acuity equal to 100 per cent., that is to say normal for each eye taken separately.

SECTION F.—RADIO-TELEGRAPH OPERATOR'S LICENCES.

1. *Flying Experience.*—(1) For the original grant of a licence, the applicant shall be required to produce evidence of having had the following minimum air experience while performing satisfactorily in an aircraft the duties of a radio-telegraph operator:—

(*a*) Radio-telephone licence—ten hours as a radio-telephone operator.

(*b*) Second Class licence—twenty hours } Other than as a radio
(*c*) First Class licence—seventy hours } telephone operator.

(2) For the renewal of a licence, the applicant shall be required to produce evidence of having had, during the two years immediately preceding the date of application, the air experience specified in sub-rule (1) for the original grant of the licence.

2. *Medical Examination.*—(1) An applicant for a licence shall be required to undergo a medical examination, by medical officers specially approved for the purpose by the Governor General in Council. This examination shall be based on the requirements set out in paragraph 4 of Section A, with the following modifications, namely:—

(*a*) Normal colour perception shall not be required;

(*b*) Binocular vision, ocular poise and ocular mobility may be subnormal;

(*c*) Visual acuity may be reduced for the two eyes with correction by glasses to a total of 50 per cent. of the normal visual acuity, it being admitted that one eye may be entirely lacking.

(2) Special attention shall be paid to the following requirements:—

(*a*) freedom of nasal air passage;

(*b*) patency of Eustachian tubes;

(*c*) absence of active otitis media; absence of ceruminous or epidermal plugs;

(*d*) perception of the whispered voice at seven feet or more for each ear;

(*e*) perfect perception of air vibrations between 512 and 2,048;

(*f*) absence of symptoms of serious labyrinthine disorder (vertigo, vomiting, loss of balance) whether spontaneous or easily evoked.

SECTION G.—GENERAL.

1. The evidence normally required as proof of flying experience shall consist of the production of a Pilot's Log Book certified by a responsible authority, or of a certified extract therefrom in the prescribed form. Such flying experience shall be to the satisfaction of the Governor General in Council.

2. Flight by night for the purpose of this Schedule, except where otherwise stated, means flight performed between the hours of one hour after sunset and one hour before sunrise.

3. A cross country flight for the purpose of this Schedule means a flight of not less than 100 miles from the aerodrome from which the flight started, whether over land or sea.

4. In each flying test, unless otherwise specified, the candidate shall be alone in the flying machine.

5. The flying tests specified in Sections A to D, respectively, shall be carried out within a maximum period of two months, and together with the technical examinations specified in these Sections shall be completed within a period of six months preceding the date of issue of the licence.

The flying tests may be carried out in any order and each may be attempted twice. They shall be witnessed by at least two properly accredited examiners who shall hand over the official reports to the proper authorities.

The official reports shall give full details of the flights, especially of the landings. The candidates shall, on demand by the examiners, furnish, before each test, proof of identity.

A barograph shall be carried on all height tests, and the graph signed by the two examiners shall be attached to their report.

6. All landings carried out in the course of the flying tests specified in Sections A to D, respectively, shall be normal three point landings to the satisfaction of the examiner.

7. (1) Application for the grant of licences should be made to the Director of Civil Aviation, Simla/Delhi, by whom all the necessary forms shall be supplied on demand.

(2) Such applications shall be accompanied by—

(*a*) three unmounted photographs of the applicant's head uncovered, the image of the head measuring approximately $1\frac{1}{4}'' \times \frac{3}{4}''$;

(*b*) the necessary medical certificates, and examiner's reports where these have not been sent direct;

(*c*) the treasury receipt for the payment of the fee due.

8. An applicant who fails in any subject of the technical examinations specified in Sections A to D shall not be permitted to appear for re-examination for a period of 3 months or such lesser period as may be intimated by the examiner or by the Director of Civil Aviation in India.

SCHEDULE III.

(See Part VI.)

DETAILED CONDITIONS APPLICABLE TO THE ISSUE, VALIDITY AND RENEWAL OF CERTIFICATES OF AIRWORTHINESS, AND GROUND ENGINEERS' LICENCES.

SECTION A.

Classification of Flying Machines.

1. Every flying machine for which a certificate of airworthiness is granted shall be classified on such certificate as belonging to one of the following categories and one or more of the following sub-divisions:—

(1) *Normal Category*—

Sub-division (*a*).—Passenger machines.

Sub-division (*b*).—Mail machines.

Sub-division (*c*).—Goods machines.

Sub-division (*d*).—Aerial work machines.

Sub-division (*e*).—Private machines.

(2) *Special Category*—

Sub-division (*f*).—Racing or record machines.

"Racing or record machines" means machines which are specially intended or arranged for the purpose of sporting or technical performances, to the exclusion of all other uses.

Sub-division (*g*).—Research or experimental machines.

"Research or experimental machines" means machines which are specially intended or arranged for the purpose of experimenting in flight with new apparatus, to the exclusion of all other uses.

(3) *Acrobatic Category*—

Sub-divisions (*a*) to (*g*) as in the two preceding categories.

Notes.—(*i*) An aerial work machine may be limited by the certificate of airworthiness to specific purposes for which it is designed or equipped.

(*ii*) Machines in the Normal Category must not be flown at indicated air speeds greatly in excess of the indicated air speed corresponding to steady horizontal flight at the international number of revolutions per minute, as specified in the certificate of airworthiness, at the rated altitude of the engine(s) and must in no circumstances be flown at speeds greater than 50 per cent. in excess of this speed. They are limited to normal flight.

(*iii*) The conditions of flight for machines in the Special Category shall be determined for each individual machine on its merits. Flights of such machines may, as a precautionary measure, be limited to certain areas and to certain periods.

(*iv*) Machines in the Acrobatic Category shall not be restricted as to the indicated air speed at which they may be flown and shall not be limited to normal flight.

(*v*) The Category in which a flying machine may be given a certificate of airworthiness shall depend upon its load factors, its performance and its equipment.

2. A flying machine which is classified in any sub-division in the Normal or Special Category may be used for any of the sub-divisions which follow in those categories, and a flying machine which is classified in any sub-division in the Acrobatic Category may be used for any of the sub-divisions which follow in that category, provided in each case that while being so used all the conditions (including those relating to the equipment and operation of the machine) applicable to the sub-division concerned shall be complied with.

SECTION B.

Instruments and equipment to be carried by flying machines.

1. The following instruments and equipment shall be required in the circumstances detailed to be carried when flying by flying machines which are required to be provided with a certificate of airworthiness:—

(1) In all flying machines:—

(*a*) For all flights:—

The instruments specified in rule 52, in addition:—

Hand fire extinguisher in each main compartment carrying personnel.

(*b*) For flights which extend beyond a radius of 3 miles from the point of departure:—

Equipment, as required by the circumstances of the case, for making the signals prescribed in these Rules.

(*c*) For flights any part of which takes place between sunset and sunrise:—

Navigation lights. Illumination for instruments and equipment.

(2) In public transport flying machines, in addition:—

(*d*) For flights which extend beyond a radius of 20 miles from the point of departure:—

Compass.

Watch.

Map or maps to cover the whole route of the proposed flight.

Turn Indicator, Sensitive Altimeter, when radio-telegraph apparatus is carried. Pitch Indicator.	For machines operating on a regular scheduled air service.

(*e*) For flights at any point of which the machine is more than 10 miles from the nearest land:—

Life belt for each person on board.

(*f*) For flights any part of which takes place between the hours of sunset and sunrise observed respectively at the ground level of the region flown over and at any point of which the machine is more than 3 miles from the nearest lighted aerodrome approved for night flying:—

Approved lighting equipment for effecting night landings.

(*g*) For flights on which a licensed navigator is required, by Part V of these rules, to be carried:—

Drift Indicator, for machines with seating accommodation, as shown in the certificate of airworthiness, for more than five persons.

Chart table. Navigator instruments. Navigator's air speed indicator. Navigator's altimeter. Navigator's compass.	As may be required by the duties and location of the navigator.

Note.—The rules with regard to carriage of radio-telegraph apparatus are contained in Parts II and VII.

(*h*) For flights over uninhabited or sparsely inhabited regions:—

Two days' supply of water and food for each person on board.

SECTION C.

Weighing and marking of flying machines.

1. Every flying machine shall be weighed:—

(*a*) Before a certificate of airworthiness is issued in respect thereof; and

(*b*) At such times after the issue of a certificate of airworthiness as the Governor General in Council may require.

2. Every flying machine for which a certificate of airworthiness is for the time being in force shall bear clearly painted upon it in a prominent position:—

(*a*) its weight empty (including water in radiators), as ascertained at its last previous weighing; and

(*b*) the maximum total weight authorised for it, as shown for the time being in its certificate of airworthiness;

and shall carry displayed in a prominent position inside it a weight schedule showing what items of equipment (if any) are included in the "weight empty (including water in radiators)" as painted on it.

SECTION D.

Inspection of aircraft before flight.

1. *Conditions of inspection.*—The inspection of a flying machine required by rule 60 shall be in accordance with the following provisions:—

(*a*) Inspection of the flying machine (including its instruments and equipment, but exclusive of the engine or engines and engine installation and of the instruments relating thereto) shall be carried out by a ground engineer licensed in Category A in respect of aircraft of the type in question.

(*b*) Inspection of the engine or engines and engine installation and of the instruments relating thereto shall be carried out by a ground engineer licensed in Category C in respect of engines of the type or types in question.

(*c*) The whole of the inspection may be carried out by the same ground engineer, provided that he shall be licensed both in Category A and in Category C in respect of aircraft and engines of the types in question.

2. *Form of ground engineer's certificate.*—The certificate of the ground engineer required by rule 60 (2) shall be made out in duplicate in the following form:—

Certificate of safety for flight.

Aircraft Type

Nationality and Registration Marks

(*a*) I hereby certify that I have this day inspected the above aircraft [including its instruments and equipment, but exclusive of the engine(s) and engine installation and of the instruments relating thereto], and that I am satisfied that it is safe in every way for flight, provided that the conditions of loading specified in the certificate of airworthiness are complied with.

(Signed)

Ground Engineer; Licence No.

Category

Date

Time

(*b*) And I hereby certify that I have this day inspected the engine(s) and engine installation (including the instruments relating thereto) of the above aircraft and that I am satisfied that they are in every way fit for flight.

(Signed)

Ground Engineer; Licence No.

Category

Date

Time

3. *Pilot's inspection.*—The inspection of a flying machine required by sub-rule (3) of rule 60 shall be such as to satisfy the pilot or person in charge of the flying machine on the points enumerated hereunder:—

(*a*) the aircraft is equipped with the prescribed instruments and equipment;

(*b*) the controls of the machine are working freely in the correct sense, and the engines are giving their correct revolutions;

(*c*) the aircraft is satisfactorily loaded with respect to total load and distribution of load as specified in the certificate of airworthiness, with such modification as may be necessitated by the conditions of the proposed flight;

(*d*) the view of the pilot is not interfered with by any obstruction not forming part of the structure of the aircraft;

(*e*) sufficient fuel, oil and water are on board for the purpose of the proposed flight, and the fuel and oil are of a grade specified by the manufacturer of the engine;

and in the case of every flying machine which is required by rule 15 to be certified as airworthy:—

(*f*) the aircraft, engines, instruments and equipment have been certified by a ground engineer holding the appropriate licence as fit in every way for the proposed flight, in accordance with rule 60.

4. *Load sheet.*—In the case of a public transport flying machine effecting public transport on a regular air service, a load sheet shall be completed by the person superintending the loading and such load sheet shall be submitted to the pilot or person in charge for the purpose of satisfying himself that the conditions set out in clause (*c*) of paragraph 3 have been complied with.

5. *Disposal of certificates.*—Of the copies of the certificates referred to in this Section, one copy shall be retained by the owner or operator of the aircraft, and one copy shall be carried in the journey log book until replaced by a further certificate issued under this Section. The load sheet shall be kept by the owner or operator of the aircraft. Certificates and load sheets shall be kept for six months from the date of their completion.

SECTION E.

Inspection of aircraft and aero-engines after overhaul, repair, etc.

1. *Conditions of Inspection.*—When any flying machine which is required by these Rules to be certified as airworthy or in respect of which a certificate of airworthiness has been issued by the Governor General in Council or the engine or engines of such flying machine is or are overhauled, repaired or modified, or when any part thereof is replaced, the flying machine shall not fly again, except in so far as flying machines which have no certificate of airworthiness are permitted to fly under these Rules, unless and until the following conditions have been complied with:—

(1) The work shall be completed in all essential respects in accordance with—

(*a*) the approved type design in conformity with which the aircraft or engine was constructed, including any modifications to that design or to the aircraft or engine which may have been required or approved by the Governor General in Council, or

(*b*) a repair scheme which has been approved by the Governor General in Council.

(2) The materials used shall be not inferior to those authorized for the type design in conformity with which the aircraft or engine was constructed.

(3) The work shall be inspected in accordance with the provisions respecting inspection of subsequent aircraft or engines applicable to the case.

(4) A certificate in the form set out in paragraph 3 of this Section, shall be obtained:

Provided that in the case of repairs where it is not reasonably practicable to comply with the above requirements, whether by reason of particulars of the type design not being available or otherwise, a temporary repair may be made for the purpose of enabling the aircraft to proceed directly to the nearest place at which a repair complying with the above requirements can be carried out, and, if the pilot is satisfied that, having regard to all the circumstances of the case, such repair is adequate for the purpose, the aircraft may then proceed to fly to such place:

Provided further that if it is proposed that such temporary repair shall remain in service, it shall be treated as a modification requiring the approval of the Governor General in Council and until such approval has been obtained the aircraft shall not fly except as specified in the preceding proviso or in so far as aircraft which have no certificate of airworthiness are permitted to fly under these Rules.

2. *Inspection Requirements.*—The following conditions shall be complied with in the inspection of flying machines or engines during construction (including overhaul), repair, modification, or replacements, namely:—

(1) All materials used in the construction of the aircraft or engine shall be in accordance with the approved specification for the first aircraft or engine constructed of that particular type,

and such material shall be adequately identified as being of the approved specification or shall be proved to comply with such specification by suitable examination, sampling and testing.

(2) The constructor's inspecting staff shall stamp, or otherwise provide means for the identification of, all parts approved by them for incorporation in the aircraft or engine in such a way that the person so approving each such part can subsequently be identified.

(3) Only parts which have been approved in accordance with clause (2) may be issued to the workshops for assembly into the aircraft or engine.

(4) The constructor shall maintain an efficient process inspection during the work of assembly, and record the progress of such inspection for each component. Every component shall be finally inspected and approved by a qualified member of his inspection staff, who shall mark the component in such a way that he may afterwards be identified as the person having so approved it and shall also sign the inspection record.

(5) Operations such as heat treatment of steels and nonferrous metals, seasoning and conversion of timber, glueing of important parts, doping, welding, whitemetalling, brazing and soldering shall be carried out by methods approved by the Governor General in Council.

(6) The constructor shall ensure that all components and parts obtained from sub-contractors have been inspected and approved in accordance with these conditions.

(7) The constructor shall ensure that all engines fitted in the aircraft have been inspected and approved in accordance with these conditions and have passed satisfactory tests. The constructor shall provide adequate facilities for these tests.

(8) The constructor shall ensure that the instruments and equipment fitted in accordance with Section B have been manufactured, and any repairs thereto executed, in accordance with approved specifications.

(9) The aircraft constructor shall ensure by suitable inspection that all engines, instruments and parts (including wiring for electrical equipment and radio-telegraph apparatus) which are fitted into the aircraft are so installed as to function correctly. The persons responsible for such inspection shall be indicated by signatures on the inspection record referred to in clause (4).

3. *Form of Certificate.*—The certificate referred to in clause (4) of paragraph 1 shall be appended to the written particulars of the overhaul, repair, modification or replacement to which it relates, and shall be in the following form:—

I hereby certify that in carrying out the overhaul, repair, modification, replacement, specified above all the conditions required for the inspection of subsequent aircraft (aero-engines) during

construction which are applicable to this aircraft (aero-engine) have been complied with.

Signed

Designation

Date

4. *Persons authorised to give certificates.*—The certificate referred to in clause (4) of paragraph 1 shall be signed by a ground engineer qualified under the terms and conditions of his licence to carry out or inspect the overhaul, repair, modification, or replacement to which the certificate relates, or by a person authorised by a firm or company approved by the Governor General in Council in this behalf, or, where the overhaul, repair, or replacement has been carried out at a Royal Air Force workshop by Royal Air Force personnel, by the officer in charge of that workshop.

5. *Ground engineers authorised to inspect.*—The categories of ground engineers who are authorised to inspect overhauls, replacements, modifications and repairs are as follows:—

(*a*) Inspection of flying machines, excluding engines—a ground engineer licensed in Category B in respect of aircraft of the type in question.

(*b*) Inspection of engines—a ground engineer licensed in Category D in respect of engines of the type in question.

(*c*) Inspection of instruments, equipment and accessories of aircraft and engines—a ground engineer licensed in Category X in respect of the type of instrument, equipment or accessory in question.

6. *Disposal of certificates.*—The certificate referred to in clause (4) of paragraph 1 shall, when it relates to the aircraft exclusive of the engine or engines, be written in the aircraft log book, or, when it relates to the engine or engines, be written in the engine log book, or, when it relates to instruments, equipment and accessories, in the aircraft or engine log book as may be most appropriate:

Provided that if the appropriate log book is not at the place where the overhaul, repair, modification or replacement is carried out, the certificate may be given separately, but shall be pasted in the log book as soon as practicable and shall be kept with the working copy of the log book until so pasted.

7. *Inspection after damage.*—When structural damage which materially impairs its safety occurs to an aircraft in respect of which a certificate of airworthiness is required by these Rules, the aircraft shall not again fly until the damage has been repaired and a certificate has been obtained in accordance with this section.

8. *Defective parts.*—When any part of an aircraft, an aero-engine, or an instrument or equipment of an aircraft is revealed by inspection to be defective, the Governor General in Council may require it to be delivered to a person authorised by him in this behalf for examination, and on a request being made by the owner such part shall be returned to him after examination.

SECTION F.

Ground Engineers' Licences. Qualifying Tests and Examinations

1. *Practical experience required.*—(1) An applicant for the grant of a licence under rule 61 shall normally be required to satisfy the examiner appointed or approved by the Governor General in Council in this behalf that he has the qualifications and has had the practical experience detailed below for the appropriate category of licence:—

Category A.—Not less than two years on aircraft maintenance or construction and maintenance.

Category B.—Not less than two years on aircraft construction, including overhaul and the testing of materials used in aircraft construction, and not less than four years in all on aircraft construction and maintenance. The applicant must be the holder of a licence in Category A.

Category C.—Not less than two years on aero-engine maintenance or construction and maintenance.

Category D.—Not less than two years on aero-engine construction, including overhaul and the testing of materials used in aero-engine construction, and not less than four years in all on aero-engine construction and maintenance. The applicant must be the holder of a licence in Category C.

Category X.—Such practical experience of the particular work of which the licence is required as in the opinion of the authorised examiners will enable the candidate to perform satisfactorily the duties for which the licence is required.

(2) A shorter period of practical experience than that specified may be accepted as sufficient on proof that the candidate has otherwise acquired adequate engineering experience which may be applied to the construction or maintenance of aircraft, aero-engines, instruments, accessories or equipment as the case may require.

(3) A candidate whose experience is limited to particular types of construction, methods of overhaul or materials may be granted a licence restricted to those particular types of construction, methods of overhaul or materials:

Provided that an applicant for such a restricted licence in Category B or D shall have had not less than one year's experience in the complete overhaul or construction and overhaul of aircraft or aero-engines, as the case may be, and not less than three years' experience in all in aircraft construction, overhaul and maintenance, or aero-engine construction, overhaul and maintenance, as the case may be, and shall, if an applicant for a B licence have held an A licence for one year, and, if an applicant for a D licence have held a C licence for one year.

2. (1) *Technical examination.*—An applicant for the grant of a licence shall be required to pass to the satisfaction of the examiner an examination in the subjects detailed below for the appropriate category of licence:—

For all Categories—

Duties and responsibilities of a ground engineer; approved materials and distribution procedure; procedure regarding modifications; forms and procedure regarding certificates and log book entries; prescribed equipment of aircraft; general principles of engineering practice.

Category A—

Inspection of aircraft before flight.

Elementary theory of flight as applied to rigging;

Erection and inspection of aircraft and adjustment of flying controls;

Inspection for wear and tear and inspection after accident;

Methods of carrying out repairs, replacements and modifications permitted under Category A;

Common defects of aircraft components;

Fitting and inspection of airscrews;

Principles of construction, installation and inspection of air speed indicators and altimeters;

Principles of construction, installation and inspection of various types of turn indicators and electrical equipment;

Erection, truing and inspection of hulls and floats.

Category B—

Inspection of aircraft during construction or overhaul.

The subjects for Category A, and in addition:—

Processes of manufacture, inspection, testing and identification of aircraft materials and parts;

Methods of repair, assembly, inspection and testing of aircraft components and complete aircraft.

Category C—

Inspection of aero-engines before flight.

Principles of internal combustion engines;

Constructional details of types of aero-engines;

Top overhaul; methods, common defects and permissible allowances for wear and distortion;

Clearances and tolerances, use of measuring instruments, and knowledge of principles of expansion of metals;

System of carburation, ignition and lubrication;

Detection and correction of running defects;

Installation of engines and inspection of installation and engine controls;

Fitting and inspection of airscrews;

Principles of construction, installation and inspection of aero-engine instruments;

Routine inspection and testing of aero-engines preparatory to flight.

Category D—

Inspection of aero-engines during construction or complete overhaul.

The subjects of Category C, and in addition:—

Processes of manufacture, inspection, testing and identification of aero-engine materials and parts;

Methods of repair, assembly, inspection and testing of aero-engine components and complete aero-engines.

Note.—In the case of restricted B and D licences such portions of the appropriate syllabus may be omitted as the examiner thinks fit.

Category X—

One or more of the following subjects according to the purpose for which the licence is required:—

(1) Repair, overhaul and testing of magnetos.

(2) Repair, overhaul, testing and calibration of aircraft and aero-engine instruments.

(3) Inspection, packing and maintenance of parachutes.

(4) Installation and compensation of compasses in aircraft.

(5) Construction and repair by welding.

(*b*) The examiners may require a candidate to undergo a practical test in any of the subjects of examination.

(*c*) An applicant for the renewal of a licence who has not, since the issue of the licence, been employed on the work for which the licence was issued may be required to undergo re-examination as a condition of the renewal of the licence.

SECTION G.

General.

1. Application for the issue or renewal of certificates of airworthiness and ground engineers' licences shall be made to the Director of Civil Aviation in India, Simla/New Delhi, by whom all the necessary forms shall be supplied on demand, and by whom instructions shall be issued as to the place and time of inspection or examination and as to further information or evidence required for the purpose of the issue of the certificate or licence.

2. The detailed syllabus of examination for ground engineers shall be supplied by the Director of Civil Aviation in India, Simla/New Delhi, on demand.

SCHEDULE IV.

DIAGRAMS.

Figure 1.—*Navigation Lights*—Angular limits prescribed in rule 89.

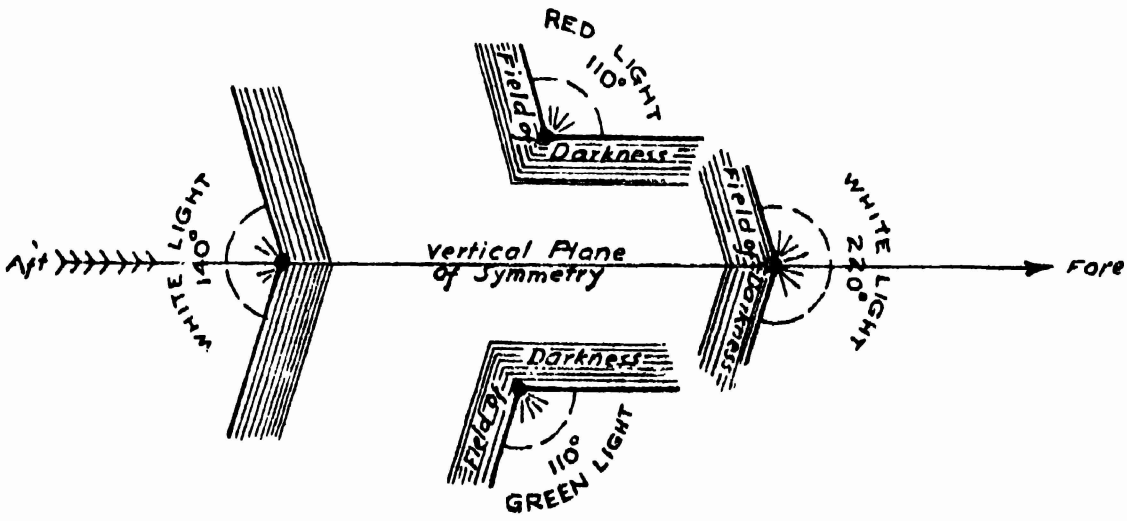

Figure 2.—Star of five points prescribed in sub-rule (2) of rule 105.

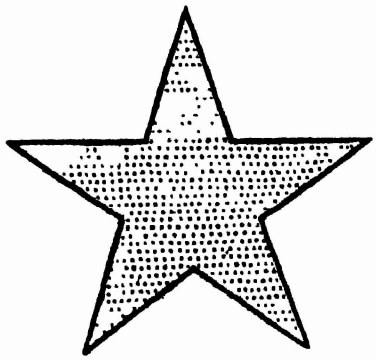

Figure 3.—Red square panel prescribed in sub-rule (3) of rule 105.

Figure 4.—Red square panel and red rectangular panel prescribed in sub-rule (4) of rule 105.

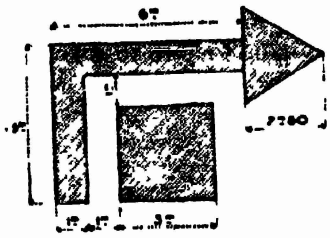

Figure 5.—Red square prescribed in sub-rule (5) of rule 105.

Figure 6.—Red square panel prescribed in sub-rule (6) of rule 105.

Figure 7.—Mast and triangular equilateral pyramid prescribed in sub-rule (7) of rule 105.

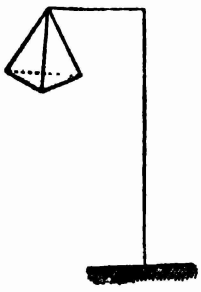

SCHEDULE V.

AERODROMES.

Section A.—Requisites to grant of licence.

(See rule 86.)

1. The landing area shall be of adequate dimensions for the type of aircraft in respect of which the licence is required, having regard to the altitude of the ground and the nature of surrounding obstructions.

2. The landing area shall be sufficiently level and smooth to present no danger to aircraft landing or taking off, and sufficiently firm in the conditions in which it is to be used to withstand the weight of the aircraft to be used.

3. The landing area shall be adequately marked with boundary marks and such bad ground, or other, markings, as may be considered necessary by the Director of Civil Aviation in India.

4. For an aerodrome to be used for night flying, the following equipment shall be provided, namely—boundary lights, obstruction lights, illuminated wind indicator, and either flares or floodlight.

5. The direction of the wind shall be clearly indicated by one or more of the recognised methods approved by the Director of Civil Aviation in India.

6. For an aerodrome open to public use such international signals shall be displayed as may be specified by the Director of Civil Aviation in India.

Section B.—Tariff of landing and housing charges at Government Aerodromes.

(See Rule 82.)

1. The charges for landing and housing of aircraft, other than airships, at Government aerodromes shall be as follows:—

Type of aircraft.	Landing fees.						Housing fees (excluding landing fees).	
	For machines fitted with tail skids.		For machines fitted with tail wheels.		Extra for each landing for machines fitted with wireless Telegraph.	Extra for each landing or departure at night.	Up to 24 hours.	For one month. (At a specified aerodrome.)
	For single landing.	Covering all landings in one month at a specified aerodrome.	For single landing.	Covering all landings in one month at a specified aerodrome.				
	Rs. a.	Rs.	Rs.	Rs.	Rs.	Rs.	Rs.	Rs.
AA.—Small type occupying not more than 500 sq. ft. of area.	1 0	15	1	15	2	2	1	15
A.—Small type occupying more than 500 sq. ft. but not more than 1,000 sq. ft.	1 8	25	1	15	2	2	2	30
B.—Medium type occupying over 1,000 sq. ft. but not more than 2,000 sq. ft.	3 0	90	2	60	2	2	6	90
C.—Large type occupying over 2,000 sq. ft. but not more than 4,000 sq. ft.	8 0	240	6	180	5	5	15	225
D.—Large type occupying more than 4,000 sq. ft. and not more than 10,000 sq. ft.	15 0	450	11	330	5	5	30	450
E.—Large type occupying more than 10,000 sq. ft.	25 0	750	20	600	10	10	40	600

2. For landing purposes, the area of an aircraft shall be calculated as the product of the span and the length of the aircraft.

3. The payment of the landing fee shall entitle aircraft to the use of the landing ground for alighting and departure, to the supply of all available information as to routes and weather conditions, and to the services of the aerodrome personnel, if available, for assisting in guiding the machine, starting propellers, carrying petrol and oil, etc.

4. Any flight, of which prior notice is given to the Aerodrome Officer, and which is undertaken solely for the purpose of ascertaining the serviceability in the air of the engine or engines, air frame or equipment of the aircraft flown, shall be deemed to be a test flight and shall be exempt from the levy of a landing fee.

5. The extra fee for each landing or departure at night will be levied only when personnel are required to attend, or flares or other lighting apparatus are used.

6. In lieu of the extra fee for each landing or departure at night the person by whom such fee is payable may at his option pay a charge of Rs. 5 per half hour or part thereof for a succession of landings or departures performed by a single user of the aircraft concerned.

7. In respect of an aircraft fitted with wireless telegraph apparatus, in lieu of the extra fee for each landing, and in addition to the standard landing fee, a person by whom such fee is payable may at his option pay a monthly charge at the following rates:—

Class.	Rs.
AA.	30
A	30
B	30
C	75
D	75
E	150

8. When an aerodrome is used temporarily for repeated landings, a daily charge equivalent to five times the charge for a single landing for the class of aircraft concerned shall be levied in respect of each aircraft, subject to a maximum total charge, in the first or any subsequent period of 30 consecutive days included in the period during which the aerodrome is so used or in any further period of less than 30 days so included, equivalent to the monthly charge set out in paragraph 1.

9. All charges for landing shall be paid either at the time of, or immediately after, the use of the landing ground.

10. For housing purposes, the area of an aircraft shall be calculated as the product of the span or overall width and the length of the aircraft in the condition in which it is housed:

Provided that, with the approval of the aerodrome authority, it shall not be necessary to fold the supporting surfaces of a flying machine in order to obtain a reduction of the housing fee when there is space available and the period of housing will not exceed 24 hours.

11. 50 per cent. of the standard housing fees shall be charged for mooring aircraft in the open, but this charge shall be made only after an aircraft has been left on the aerodrome for a period of not less than six hours.

12. All charges for housing and mooring other than daily charges shall be paid in advance. When housing space which has been paid for in advance is not used, the space may be used for the housing of other aircraft, and no refund shall be made to the lessee unless he is prevented by the housing of other aircraft from obtaining accommodation for his aircraft.

13. Special rates for long periods may be fixed, on application to the Director of Civil Aviation, in cases in which a number of aircraft are housed or where extensive use is made of facilities over a long period.

SCHEDULE VI.

PENALTIES.

(See rule 139.)

Nature of offence.	Relevant Rule or Rules.	Penalty.
1. *Registration and marking of aircraft.*—Contravention of rules relating to the registration and marking of aircraft.	Rule 5 and the rules in Part IV.	Imprisonment for a term not exceeding one month, or a fine not exceeding Rs. 250 or both.
2. *Documents.*—Contravention of the rules relating to carriage and production of documents.	7, 17, 19 ..	
3. *Radio-telegraphy.*—Contravention of the rules relating to the use of radio-telegraph apparatus.	Rule 9 and the rules in Part VII.	
4. *Mails.*—Contravention of the rule relating to the carriage of mails.	10 ..	
5. *Aerial work and public transport.*—Unauthorised use of aircraft for aerial work or public transport.	14 ..	
6. *Log Books.*—Contravention of the rules governing the issue and maintenance of log books.	67 ..	
7. *Aircraft accidents.*—Failure to notify or submit reports on accidents.	69, 70 ..	
8. *Aerodrome.*—Contravention of the rules relating to aerodromes.	Rule 11 and the rules in Part XI.	Imprisonment for a term not exceeding 2 months or a fine not exceeding Rs. 500 or both.
9. *Conditions under which aircraft may be flown.*—*A. Personnel.*—Contravention of the rules relating to personnel.	Rule 6 and the rules in Part V.	
B. Airworthiness.—Contravention of the rules relating to airworthiness.	Rule 15 and the rules in Part VI.	
10. *Rules of the air.*—Contravention of the rules of the air.	Rule 16 and the rules in Part XII.	
11. *Detention of aircraft.*—Acts in contravention of any authorised direction given for the detention of an aircraft.	18 (2) ..	
12. *General safety conditions.*—Contravention of the rules relating to general safety conditions.	The rules in Part III.	
13. *Air Route beacons, etc.*—Contravention of the rules relating to the supply, supervision and control of air route beacons, aerodrome lights and lights at or in the neighbourhood of aerodromes or air routes.	The rules in Part VIII.	

Nature of offence.	Relevant Rule or Rules.	Penalty.
14. *Prohibited carriage.*—Unauthorised carriage on aircraft of certain articles.	8 ..	Imprisonment for a term not exceeding 3 months, or a fine not exceeding Rs. 1,000 or both.
15. *Prohibited areas.*—Unauthorised flight over or photography of areas prohibited aircraft.	12, 13 ..	
16. *Entry and departure of aircraft.*—Contravention of the conditions under which aircraft may enter or leave British India.	The rules in Part IX of the Indian Aircraft Rules, 1920.	..
17. *Aircraft accidents.*—Removal of or interference with aircraft to which an accident has occurred.	71 ..	
18. *Investigation of accidents.*—Obstruction of proceedings.	76 ..	
19. *Documents.*—Loan of or allowance of use of any licence or certificate issued under the rules.	135 ..	
20. *Foreign military aircraft.*—Unauthorised flight or assistance in such flight.	136 ..	
21. *Obstruction of authorised persons* in the performance of their duties, under the rules.	137 ..	
22. The doing of any act prohibited by or under any rule not specified in the foregoing items.	..	

N. MAHADEVA AYYAR,
Additional Deputy Secretary to the Govt. of India.

HOME DEPARTMENT.

New Delhi, the 2nd March 1937

NOTIFICATION

Rangpur-Goalpara-Garo Hills. -No. F.360/36-Public.—In exercise of the powers conferred by section 60 of the Government of India Act, and in supersession of all previous notifications relating to the boundary between the district of Rangpur (in Bengal) on one side and the districts of Goalpara and Garo Hills (in Assam) on the other, the Governor-General in Council is pleased to declare that the following shall be the boundary between the said districts:—

From the trijunction of Rangpur, Cooch Behar and Goalpara at the north-east corner of village Dakshin Tilai, (jurisdiction list No. 18), police-station Bhurangamari, the boundary follows the eastern boundary of Dakshin Tilai, jurisdiction list No. 18, northern and eastern boundaries of Bhurangamari, jurisdiction list No. 51, eastern boundary of Bharater Chhara, jurisdiction list No. 53, northern and eastern boundaries of Banur Kuthi, jurisdiction list No. 64, eastern boundary of Parasuramer Kuthi, jurisdiction list No. 65, north-eastern boundary of Chhaubandha Khalisakuri, jurisdiction list No. 66, northern and eastern boundaries of Mangalar Kuthi, jurisdiction list No. 67, eastern boundaries of Kedar, jurisdiction list No. 68 and Dakshin Baldia, jurisdiction list No. 71, as laid down in the cadastral survey of seasons 1931-35. All these villages are in police-station Bhurangamari, district Rangpur.

Then along the south-eastern boundary of Baher Kedar, jurisdiction list No. 64, northern and eastern boundaries of Dhaluabari, jurisdiction list No. 65, and Kachardara, jurisdiction list No. 66, eastern boundary of Kachakata, jurisdiction list No. 70, part of western, the northern and eastern boundaries of Dhanirampur, jurisdiction list No. 71, eastern and southern boundaries of Balarhat, jurisdiction list No. 72, eastern boundary of Kanyamati, jurisdiction list No. 73, northern boundaries of Chauddaghari, jurisdiction list No. 76, and Jhau Kuthi, jurisdiction list No. 77, northern and eastern boundaries of Pakhuria, jurisdiction list No. 78, eastern boundaries of Kulamua Kalar Char, jurisdiction list No 79, Narayanpur, jurisdiction list No. 81, Uttar Dhakdahar, jurisdiction list No. 82, Dumardaha, jurisdiction list No. 83, and Dakshin Dhakdahar, jurisdiction list No. 84, as laid down in the cadastral survey of season 1931-35. All these villages are in police-station Nageswari, district Rangpur.

Then along the eastern boundary as laid down in the cadastral survey of 1931-35 of Pipulbari, jurisdiction list No. 75, police-station Kurigram, district Rangpur.

Then along the eastern boundary as laid down in the survey of 1931-35 of Mekurer Alga, jurisdiction list No. 189, and Saheber Alga, jurisdiction list No. 190, police-station Ulipur, district Rangpur

Then along the eastern boundary of Kazaikata, jurisdiction list No. 4, northern and eastern boundaries of Kauniar Char, jurisdiction list No. 5, north-eastern boundary of Danthbhanga, jurisdiction list No. 7, eastern boundaries of Jhagrar Char, jurisdiction list No. 8, Boalmari, jurisdiction No. 18, Saulmari, jurisdiction list No. 1[illegible], Rahumari Alga, jurisdiction list No. 22, Kalabari, jurisdiction list No. 24, and eastern boundary of Pahartali, jurisdiction list No 37, as laid down in the cadastral survey of 1931-35 up to the trijunction of Rangpur, Goalpara and Garo Hills where the boundary between Rangpur and Goalpara terminates.

From the bove trijunction the boundary between Rangpur and Garo Hills starts and passes along the eastern boundaries of Pahartali, jurisdiction list No. 37, and Jauniar Char, jurisdiction list No. 38, as laid down in the cadastral survey of 1931-35 till it meets the trijunction of Rangpur, Mymensingh and Garo Hills at the extreme south-east corner of village Jauniar Char, jurisdiction list No. 38. All the above villages are in police-station Rahumari, district Rangpur.

J A THORNE,

Joint Secy. to the Govt. of India.

Registered No. C207

The Calcutta Gazette

THURSDAY, APRIL 8, 1937.

PART IB

Educational Notices.

(Approved by the Executive Council, dated the 20th March 1937.)

University of Dacca.

Ramna, Dacca, the 20th March 1937.

Revised Time-table for the B.L. Examinations to be held in August 1937 (in supersession of the Time-table approved by the Executive Council, dated the 22nd December 1936.)

(The order of subjects given in the Time-table is liable to changes in detail.)

Preliminary and Final B.L. Examinations, August 1937.

Time—11 a.m. to 3 p.m.

1937.

Tuesday,	August	10	Muhammadan Law and Law of Persons.
Wednesday	,,	11	Roman Law.
Thursday	,,	12	Hindu Law.
Saturday	,,	14	Jurisprudence.
Monday	,,	16	Constitutional Law and History of English Law.
Tuesday	,,	17	(*i*) Law of Transfer and Succession. (*ii*) Law of Persons and Law of Testamentary and Intestate Succession.
Wednesday	,,	18	(*i*) Law of Real Property, Equity and Trusts. (*ii*) Law of Real Property, Transfer and Trusts.
Thursday	,,	19	Law of Contract and Torts.
Saturday	,,	21	Land Laws of Bengal.
Monday	,,	23	Law of Crimes.
Tuesday	,,	24	Law of Evidence and Civil Procedure.

N. AHMAD, *Registrar.*

Rajshahi Division.

Jalpaiguri, the 25th March 1937.

Corrigendum to the list of the candidates declared to have passed the Primary (Maktab) Final Examination, 1936, published in the "Calcutta Gazette", on the 14th January 1937.

Pabna district.

FIRST DIVISION.

Serajganj Centre.

In place of

18 Khagendra Nath Sarkar (E), Baniagat Primary School

please read

18 Jagadish Chandra Haldar (E), Baniagat Primary School.

P. C. MUKHERJI,

Inspector of Schools, Rajshahi Division.

Rajshahi Division.

Jalpaiguri, the 1st March 1937.

Results of the Guru and Muallim Training Examinations of 1936.

The following Gurus are declared to have passed the Guru and Muallim Training Examinations of 1936:—

(The letter "E" against the name of a candidate indicates that he passed also in English.)

(In order of merit.)

Serial No.	Roll No.	Name of candidate.
		Bogra G. T. School.
1	15	Jasimuddin Ahmad.
		Dinajpur G. T. School.
2	22	Narain Chandra Sarkar (E).
		Nilphamari G. T. School.
3	33	Atul Krishna Sur (E).
		Dinajpur G. T. School.
4	1	Yasin Ali Mia (E).
		Boalia G. T. School.
5	29	Soukhin Kumar Biswas (E).
6	2	Rash Behari Das (E).
		Nilphamari G. T. School.
7	14	Md. Serajul Haque (E).
		Dinajpur G. T. School.
8	28	Kamaluddin Ahmad.
		Pabna G. T. School.
9	17	Md. Abdul Quddus Kamali.
		Jalpaiguri G. T. School.
10	2	Bimal Chandra Ghose.

Rajshahi district.

Boalia G. T. School.

1 Sheikh Enayetullah (E).
2 Shashi Bhusan Sarkar.
3 Md. Gowhar Ali Shah (E).
4 Jan Muhammad Fakir.
5 Kafiruddin Mandal.
6 Habibar Rahman.
7 Shamsher Ali Sirkar.
8 Bhabbesh Chandra Roy (E).
9 Muhammad Hossain Sardar.
10 Muhammad Ismail Hossain (E).
11 Aminuddin Mia.
12 Haidar Ali Sarkar.
13 Amir Hossain Mia.
14 Johiruddin Khandkar.
15 Md. Shamsuddin.
16 Brojo Bashi Pal.
17 Md. Ramjan Ali Sarkar (E).
18 Bhowani Kishore Roy (E).
19 Md. Younusur Rahman.
20 Nakul Chandra Mandal.
21 Md. Safiuddin Pramanik.
22 Md. Fajaruddin Molla (E).
23 Md. Maniruddin Pramanik (E).
24 Tarapada Karmakar (E).
25 Muhammad Mansur Ali (E).
26 Shamsuddin Mandal (E).
27 Abdul Majid Mia (E).
28 Kishori Mohan Karmakar (E).
29 Shib Charan Ghose (E).
30 Khairatullah Khan.
31 Md. Anisur Rahman (E).
32 Afazuddin Sarkar.
33 Faizuddin Ahmad.
34 Idris Ali Sarkar (E).

Private candidate.

1 Nagendra Nath Chakravarty.

Natore Muallim Training School.

1 Haji Azimuddin Ahmad.
2 Muhammad Abdul Jabbar.
3 Muhammad Badaruddin (E).
4 Abdul Hamid Khan.
5 Muhammad Kaisar.
6 Muhammad Aftabuddin.
7 Muhammad Amanatullah.
8 Jainuddin Ahmad (E).
9 Md. Naimuddin.
10 Md. Rahim Baksh (E).
11 Md. Mashiatullah (E).
12 Md. Ayub Hossain.
13 Dewan Md. Pearuddin.
14 Md. Tajibor Rahman.
15 Md. Fazlul Haque.
16 Janab Ali Ahmad.
17 Md. Mazharul Islam.
18 Md. Anisur Rahman.
19 Md. Abdul Wahed.
20 Abul Fazl Md. Burhanuddin.
21 Md. Abdur Rauf (E).
22 Md. Nasihat Ali.
23 Abu Atif Md. Abdul Latif.
24 Md. Amjad Ali.
25 Khabiruddin Ahmad.
26 Md. Abdul Halim (E).
27 Md. Nasihatullah.
28 Md. Salimullah.
29 Md. Harunar Rashid.
30 Md. Johiruddin.
31 Md. Abdul Hamid.
32 Md. Sharifuddin.
33 Md. Lutfar Rahman.
34 Md. Idris Ahmad, II.
35 Md. Mojibullah.
36 Md. Abdul Ghani.
37 Kafiluddin Ahmad.
38 Kaji Jamlauddin Ahmad.

Private candidate.

1 Md. Faizuddin Khondkar.

Naogaon G. T. School.

1 Danejuddin Pramanik.
2 Md. Ashmatullah.
3 Khabiruddin Sheikh.
4 Md. Mahiuddin Sarkar.
5 Dabiruddin Khondkar.
6 Md. Mohiuddin Mandal (E).
7 Mofizuddin Mandal.
8 Krishna Mohan Pramanik.
9 Judhistir Mandal.
10 Nakul Chandra Pramanik.
11 Md. Ishaque.
12 Ahmad Ali Mirdha.
13 Kajemuddin Mia.
14 Hafezuddin Sarkar.
15 Md. Kasiruddin Pramanik.
16 Quasimuddin Sardar (E).
17 Muhammad Idris (E).
18 Chand Muhammad Khan (E).
19 Abul Hossain Mandal.
20 Rawshan Ali Mandal.

Private candidate.

1 Meher Ali Pramanik.

Dinajpur district.

Dinajpur G. T. School.

1 Fazley Haque Sarkar.
2 Serajuddin Ahmad (E).
3 Md. Abdul Aziz (E).

4 Samiruddin Ahmad, I.
5 Md. Alimuddin (E).
6 Md. Sharafuddin.
7 Jasimuddin Khondkar.
8 Dabiruddin Mandal.
9 Ayenuddin Mandal.
10 A. K. M. Safiuddin Mia, I (E).
11 Samiruddin Ahmad, II.
12 Ashabuddin Sarkar (E).
13 Afazuddin Ahmad.
14 Md. Lutful Haque.
15 Md. Kalimuddin.
16 Sagaruddin Mandal.
17 Md. Babar Ali.
18 Maharam Sha.
19 Keshab Chandra Das (E).
20 Parsha Nath Das.
21 Dhirendra Nath Paul (E).
22 Mohini Mohan Das.
23 Gopal Chandra Das.
24 Baidya Nath Mallik.
25 Nooruddin Ahmad (E).
26 Md. Safiuddin, II.
27 Md. Altaf Ali (E).
28 Sk. Jainuddin Ahmad (E).
29 Kafiluddin Mia.
30 Syed Waris Ali Dewan.
31 Mahiuddin Ahmad.
32 Kali Kumar Ganguly.
33 Bejoy Kumar Jhan.
34 A. M. Shafiuddin, III.
35 Md. Abdul Karim.

Private candidates.

1 Abbasuddin Ahmad.
2 Kashiruddin Ahmad.
3 Kazi Nazimuddin (E).
4 Jiheruddin Ahmad.
5 Abdul Osman.
6 Karamat Ali Talukdar.
7 Mainuddin Ahmad.

Thakurgaon G. T. School.

1 Azimuddin Ahmad.
2 Asgar Ali (E).
3 Md. Basiruddin.
4 Darshan Ali Shah.
5 Nasiruddin.
6 Tasadduque Ahmad.
7 Md. Maniruzzamn.
8 Md. Shamsul Haque.
9 Probhat Chandra Roy Chowdhry (E).
10 Nagendra Nath Adhikary.
11 Rajani Kanta Roy.
12 Kali Mohan Sinha.
13 Nabiruddin Ahmad.
14 Abdus Subhan Mia.
15 Mirza Sadique Ali Beg.
16 Mafizuddin Ahmad (E).
17 Shaikh Dhan Muhammad.
18 Shaikh Tamizuddin Ahmad.
19 Abdul Ghani (E).
20 Muktipada Goswami (E).
21 Debendra Kumar Nath.
22 Kazemuddin Ahmad.
23 Jogendra Nath Barma.
24 Dewan Sadaruddin Ahmad.
25 Dewan Wazed Ali (E).
26 Jatindra Kumar Chakravarty (E).
27 Md. Afaruddin Sarkar.
28 Md. Tozammul Hossain.
29 Motaraf Ali Khan (E).
30 Nazimuddin Sarkar.
31 Md. Tamizuddin.
32 Rafiquddin Ahmad.
33 Md. Dayemuddin (E).
34 Dinabandhu Roy.
35 Aswini Kumar Sarkar (E).
36 Nitya Nanda Chanda (E).

Private candidates.

1 Shahabuddin Ahmad.
2 Md. Abdul Kadir.

Jalpaiguri district.

Jalpaiguri G. T. School.

1 Ram Kumar Barma.
2 Quazi Sa'adullah (E).
3 Jatindra Nath Joarder (E).
4 Md. Azhar Ali, I (E).
5 Nimai Chandra Das (E).
6 Rajendra Nath Roy.
7 Hanifa Muhammad.
8 Md. Abdul Ahad Dewan.
9 Tasibuddin Ahmad (E).
10 Anwar Ali Patwari.
11 Abdul Ghani (E).
12 Khagendra Nath Chowdhry.
13 Md. Nazimuddin.
14 Abdul Quddus (E).
15 Md. Asiruddin Mia.
16 Md. Mahiuddin.
17 Suresh Chandra Majumdar (E).
18 Habibullah Bhat.
19 Aswini Kumar Biswas.
20 Noor Muhammad Patwari.
21 Niranjan Adhikary.
22 Premananda Sarma.
23 Md. Mohsin (E).
24 Kartik Chandra Sinha.
25 Samadullah Mia (E).
26 Md. Azhar Ali, II (E).
27 Baikuntha Nath Das.
28 Balendra Nath Roy.
29 Akshoy Narayan Roy.
30 Darajul Islam Dowan.
31 Baneswar Roy.
32 Kanteswar Roy.
33 Habibar Rahman.

Private candidates.

1 Indra Mohan Roy.
2 Md. Aynul Haque.
3 Jogendra Nath Roy.
4 Sahanuddin Ahmad.

Rangpur district.

Kurigram G. T. School.

1 Md. Majibur Rahman.
2 Lakshmi Narayan Pathak.
3 Jonad Ali Ahmad (E).
4 Khwaja Md. Abu Taleb (E).
5 Md. Shahadatullah.
6 Md. Abdur Rahman.
7 Purna Chandra Sarkar.
8 Gopal Chandra Das.
9 Hem Lal Das (E).
10 Md. Hossain Ali Mia.
11 Md. Khamiruddin (E).
12 A. B. Md. Reazuddin.
13 Arabuddin Ahmad.
14 Dhajiruddin Ahmad.
15 Jnan Chandra Das.
16 Lalit Chandra Sarkar (E).
17 Md. Abdul Haque Akanda.
18 Md. Kasiruddin Mandal.
19 Md. Ali Mia.
20 Md. Alabaksh Fakir.
21 Md. Mohsin Ali.
22 Md. Ramjan Ali (E).
23 Md. Ibrahim Mia.
24 Md. Jaffaruddin Mandal.
25 Md. Sabed Ali Sheikh.
26 Md. Abdul Hamid.
27 Md. Mobarak Ali.
28 Md. Jasimuddin.
29 A. K. Md. Hasanatullah (E).
30 Md. Solemanuddin Bakshi.
31 Mozaffar Ahmad Mazumdar (E).
32 Md. Farazuddin Mia.
33 Md. Fazaluddin Sarkar.
34 Md. Sanaullah Behari.
35 Kshitish Chandra Das (E).

Private candidates.

1 Abhay Charan Sarkar.
2 Tarani Mohan Sarkar.

Nilphamari G. T. School.

1 Sarafuddin Ahmad.
2 Jamaluddin Ahmad, I.
3 Nazemuddin Ahmad (E).
4 Farazuddin Ahmad (E).
5 Md. Abul Hossain.
6 Md. Basiruddin (E).
7 Mafizuddin Ahmad, I (E).

8 Md. Abbas Ali Sarkar (E).
9 Md. Solaiman.
10 Ahmad Ali.
11 Omaruddin Ahmad.
12 Asanuddin (E).
13 A. K. Md. Fazal Karim.
14 Md. Akram Ali.
15 Md. Ilyas.
16 Md. Idris Mia (E).
17 Md. Fazlul Karim.
18 Md. Nizamuddin.
19 Probodh Bhusan Tniki.
20 Md. Jamaluddin, II (E).
21 Md. Tofazzal Hossain (E).
22 Afanuddin Ahmad.
23 Taslimuddin Ahmad (E).
24 Md. Osimuddin (E).
25 Md. Ishaque Hossain.
26 Abul Hossain.
27 Md. Yunus.
28 Mafizuddin Ahmad, II.
29 Samsuddin Ahmad (E).
30 Radhika Krishna Sil.
31 Chitra Mohan Roy.
32 Prasanna Kumar Sarkar.
33 Monmohan Mahato.
34 Surendra Nath Roy.
35 Hara Lal Roy.
36 Mritunjoy Barman (E).

Private candidate.

1 Jadav Chandra Roy.

Gaibandha G. T. School.

1 Md. Abdul Basir (E).
2 Md. Mobarak Ali (E)
3 Jahiruddin Ahmad.
4 Md. Moyenuddin Sarkar.
5 Md. Jobed Ali.
6 Radha Madhab Goon.
7 Probhat Chandra Bakshi.
8 Naresh Chandra Guha.

Private candidates.

1 Nasiruddin Mandal.
2 Samsuddin Ahmad.
3 Md. Saidur Rahman (E).

Bogra district.

Bogra G. T. School.

1 Md. Ahsan Ali (E).
2 Digendra Nath De.
3 Dabiruddin Ahmad (E).
4 Md. Abdul Wahid (E).
5 Basanta Kumar Lahiri.
6 Md. Umar Ali Mia (E).
7 Sharifuddin Mandal.
8 Alimuddin Mandal.
9 Nibaran Behari Chowdhury (E).
10 Akhand Basiruddin.
11 Nazibuddin Ahmad.
12 Abinash Chandra Chakravarty (E).
13 Syed Tayef Ali.
14 Md. Abdur Rahim (E).
15 Md. Ali Mia (E).
16 Md. Abdus Salam (E).
17 Kaibalya Chandra Sanyal.
18 Khondkar Md. Sarafatullah (E).
19 Md. Mujibur Rahman (E).
20 Asimuddin Sarkar (E).
21 Md. Abdur Razzaque.
22 Khondkar Md. Abdul Hares (E).
23 Md. Ismail Hossain Mia (E).
24 Md. Joliluddin Khan (E).
25 Erfan Ali Khan (E).
26 Manmatha Nath Sarkar.
27 Md. Ayubuddin Mandal.
28 Md. Asimuddin.
29 Kasimuddin Ahmad (E).
30 Md. Abdus Sattar (E).
31 Mir Khorshed Ali (E).
32 Asiruddin Sarkar (E).
33 Md. Ali Sarkar.
34 Fariduddin Ahmad.
35 Nalini Kanta Mandal.

Pabna district.

Pabna G. T. School.

1 Abinash Chandra Khan.
2 Md. Jasimuddin.
3 Md. Injil Ali.
4 Harish Chandra Sanyal.
5 Manohar Chandra Shaha.
6 Md. Azizar Rahman.
7 Md. Rahimuddin Sarkar.
8 Md. Mozaffar Hossain (E).
9 Mokshed Ali Sarkar.
10 Ayenuddin Mia, I.
11 Ayenuddin Mia, II.
12 Mokshed Ali Mia.
13 Md. Khorshed Ali.
14 Md. Niamat Ali Sheikh.
15 Md. Abdul Hakim Chowdhry.
16 Raisuddin Mia.
17 Amarendra Nath Chakravarty.
18 Bhakta Chandra Karmakar.
19 Promode Chandra Chakravarty.
20 Md. Abdul Majid Talukdar.
21 Ram Chandra Roy.
22 Jaliluddin Ahmad.
23 Osman Ghani Talukdar.
24 Abhay Charan Paul.
25 Md. Abdul Ghaffar Mia (E).
26 Mokshed Ali Sarkar.
27 Md. Rustom Ali.
28 Md. Tafiluddin Mia.
29 Narendra Nath Saha.
30 Md. Abdus Sattar Talukdar.
31 Md. Tasiruddin (E).
32 Md. Jonab Ali Mia (E).
33 Ganesh Chandra Chaki (E).
34 Lutfur Rahman Khan.

Private candidates.

1 Md. Abbas Ali Biswas.
2 Md. Sagiruddin Khondkar (E).

Malda district.

Malda G. T. School.

1 Debendra Narayan Chowdhry (E).
2 Lokman Hossain Momin.
3 Mahendra Nath Pramanik.
4 Lalit Mohan Jha.
5 Hira Lal Mandal.
6 Md. Abdur Razzaque (E).
7 Bibhuti Bhusan Roy (E).
8 Syed Sojawar Ali.
9 Sheikh Badaruddin Ahmad (E).
10 Md. Abdul Aziz Mian.
11 Momtazuddin Ahmad.
12 Md. Lutful Haque.
13 Md. Mofazzal Hossain (E).
14 Md. Majid Ali (E).
15 Md. Herashuddin Mandal.
16 Sheikh Md. Musha Ali.
17 Sheikh Lal Muhammad.
18 Ashok Muhammad (E).
19 Lalit Mohan Shaha.
20 Tafazzal Hossain.
21 Moazzam Hossain.
22 Benode Behari Misra.
23 Dewan Jahiruddin Ahmad.
24 Kumud Chandra Paul (E).
25 Sabita Charan Sarkar (E).
26 Dukshabhanjan Mandal.
27 Md. Mohshin Reza.
28 Subal Chandra Mandal.
29 Soleman Biswas.
30 Md. Rezatulla Biswas.
31 Sazeman Biswas.
32 Md. Aftabuddin (E).
33 Nand Lal Mandal.
34 Tarak Brahma Das.
35 Md. Ismail.
36 Phani Bhusan Bhattacharyya.
37 Bhuban Mohan Das.
38 Kali Pada Das.
39 Syed Motahar Ali.

Private candidates.

1 Abdul Wahed.
2 Dhirendra Nath Goswami.
3 Jamini Kanta Mandal.

P. C. MUKHERJI,

Inspector of Schools, Rajshahi Division

NOTIFICATION.

Bengal Engineering College, the 25th March 1937.

The following candidates from Collegiate and Zilla Schools in Bengal have passed the School Final Examination (Science Side) held in February 1937 :—

SECOND DIVISION.

(Names are arranged in alphabetical order.)

Roll No.	Name.	Age on 1st January 1937. Y.	M.	School from which passed.
4	Banerjee, Mono Ranjan	18	5	Dacca Collegiate School.
6	Barua, Bodhitaru Kumar	17	0	Chittagong Collegiate School.
42	Basak, Nitai Pada	17	8	Pabna Zilla School.
21	Bisi, Akhil Chandra	15	11	Rajshahi Collegiate School.
37	Biswas, Manindra Nath	17	9	Khulna Zilla School.
36	Bose, Dilip Ranjan	15	3	Ditto.
7	Chakravarty, Sukhendubikash	17	11	Chittagong Collegiate School.
2	Das, Shambhu Nath	18	1	Dacca Collegiate School.
38	,, Anil Kumar	20	5	Khulna Zilla School.
19	Das Gupta, Samarendra Nath	17	6	Rajshahi Collegiate School.
14	Dey, Sudhir Chandra	18	9	Rangpur Zilla School.
35	,, Shibendra Nath	21	2	Khulna Zilla School.
1	Ghosh, Abinash Chandra	18	11	Dacca Collegiate School.
26	,, Beni Madhab	15	9	Rajshahi Collegiate School.
30	,, Santi Ranjan	18	4	Khulna Zilla School.
31	Kazi, Shamsuzzaman	17	11	Ditto.
44	Khalil Ahamed Rokonuddin	16	11	Pabna Zilla School.
22	Kundu, Jagannath	15	9	Rajshahi Collegiate School.
24	Md. Abduzhaher Sarkar	20	0	Ditto.
40	,, Abdur Rahman Miah	16	5	Pabna Zilla School.
20	,, Ataur Rahman	17	9	Rajshahi Collegiate School.
28	,, Farhad Ali Khondaker	16	5	Ditto.
27	,, Ismail Hossain	18	11	Ditto.
18	,, Yakub	18	0	Ditto.
16	Mukherjee, Amal Kumar	15	1	Darjeeling Government H. E. School.
8	Nath, Dhirendra Kumar	16	2	Chittagong Collegiate School.
43	Roy, Amarendra Nath	14	10	Pabna Zilla School.
9	,, Sudhamoy	16	1	Chittagong Collegiate School.
11	Saha, Hare Krishna	16	0	Ditto.
34	Sarkar, Nirode Chandra	17	11	Khulna Zilla School.
39	,, Rakhal Chandra	17	10	Pabna Zilla School.
10	Sen, Nripendu Bikash	17	0	Chittagong Collegiate School.
15	Sen Gupta, Bimal	18	8	Darjeeling Government H. E. School.
23	,, Sunil Kumar	14	10	Rajshahi Collegiate School.
5	Sufee Muhammad Abdul Majid	18	6	Dacca Collegiate School.
33	Sur, Profulla Kumar	15	11	Khulna Zilla School.
25	Talukdar, Bhabendra Nath	19	0	Rajshahi Collegiate School.

R. WOLFENDEN,

Secretary, School Final Examination Board (Science Side).

NOTIFICATION.

Bengal Engineering College, the 25th March 1937.

The following junior scholarships are awarded on the results of the School Final Examination (Science Side) held in February 1937 :—

First Grade—Rs. 20 a month.

1	Shambhu Nath Das	Dacca Collegiate School.
2	Amal Kumar Mukherjee	Darjeeling Government H. E. School.
3	Bimal Sen Gupta	Ditto.

Second Grade—Rs. 15 a month.

1	Jagannath Kundu	Rajshahi Collegiate School.
2	Rakhal Chandra Sarkar	Pabna Zilla School.
3	Md. Farhad Ali Khandaker	Rajshahi Collegiate School.

Third Grade—Rs. 10 a month.

1	Hare Krishna Saha	Chittagong Collegiate School.
2	Akhil Chandra Bisi	Rajshahi Collegiate School.
3	Dhirendra Kumar Nath	Chittagong Collegiate School.
4	Sufee Muhammad Abdul Majid	Dacca Collegiate School.

R. WOLFENDEN,

Secretary, School Final Examination Board (Science Side).

Office of the Director of Public Instruction, Bengal.

NOTIFICATION.

Calcutta, the 22nd March 1937.

Research Scholarships to be awarded in 1937.

Three Research Scholarships will be awarded for the encouragement of original research to candidates who have high and special qualifications and appear to be likely to conduct original research with success. The value of each scholarship is Rs. 75 a month.

2. Ordinarily one scholarship will be awarded annually to a student who proposes to carry on original research in scientific subjects, including such branches as natural and physical science, chemistry, mathematical science, etc., and another scholarship will similarly be awarded for research in literary subjects, including such branches as languages, comparative philology, palæography, epigraphy, philosophy, history, archæology, anthropology, etc., and the third scholarship will be awarded for research either in scientific or in literary subjects. No application for a research scholarship will be considered unless a candidate submits certificates showing that he has the capacity for undertaking the research proposed and a programme of work indicating a definite course of enquiry.

3. Election will be made in the first instance for one year only, with effect from the 1st July 1937, but a scholarship may be renewed from year to year up to the limit of three years, provided the scholar has throughout the year vigorously prosecuted original research in the subject selected by him.

4. Each candidate for a scholarship should submit his application through the head of the institution in which he last studied to the Director of Public Instruction, Bengal, on or before the 10th May next, and must produce evidence of having passed from a College or other institution in Bengal the M.A. or M.Sc. examination of the Calcutta or Dacca University, or of having obtained some other equivalent or higher degree of either of these Universities in 1934 or 1935 or 1936. He must state as definitely as possible the subject or part of the subject in which he intends, if elected to a scholarship, to carry on his original investigation. He must also state the name of the institution in which he proposes to work, with evidence that the authorities of the institution are able and willing to provide facilities for him, or if no institution is mentioned, the circumstances or conditions under which he proposes to work should be stated.

5. Each candidate is required to submit with his application a declaration to the effect that, if selected, he will not undertake any work, either paid or unpaid, or sit for any examination, or pursue any course of studies except that of original research in his selected subject during the tenure of his scholarship.

6. The application from each candidate should contain a note from the authority forwarding the application as to how long the proposed research will take.

7. The candidate must be a native or domiciled in Bengal.

8. Applications for this year's scholarships should be submitted in prescribed forms, which are obtainable from the Personal Assistant to the Director of Public Instruction, Writers' Buildings, Calcutta.

9. Applications submitted after the appointed date or not in the proper form will not be considered.

J. M. BOTTOMLEY,

Director of Public Instruction, Bengal.

Registered No. C207

The Calcutta Gazette

THURSDAY, APRIL 8, 1937.

PART II

Advertisements.

Notices.

Advertisements, Notices, etc., intended for insertion in this part of the Gazette must be sent to Press before 12 noon on Saturday, and all costs deposited and proofs returned by 4 p.m. on Monday. Manuscripts and postal remittances must be addressed to Superintendent, Government Printing (Publication Branch), Bengal Government Press, Alipore.

For the convenience of advertisers located in Calcutta, arrangements have been made to accept advertisements and prepayment of charges at Sales Office, Ground Floor, Writers' Buildings, Calcutta. The latest time for receipt of advertisements for current week's Gazette has been extended till 4 p.m. on Mondays.

Office of the Municipal Commissioners of Pabna.

NOTIFICATION OF SALE UNDER SECTION 525, BENGAL MUNICIPAL ACT, 1932.

	Rs.
Holding No. 408 Dilalpur (Fish market)—Tax due for 4 qrs. of 1936-37 at Rs. 46-8 per qr.	=186
Holding No. 409 Dilalpur (Vegetable market)—Tax due for 4 qrs. of 1936-37 at Rs 23-4 per qr.	=93
Total ..	279

WHEREAS in the opinion of the Commissioners, the ownership of the abovenoted holdings within the Pabna Municipality are disputed, and as a sum of Rs. 279 (two hundred and seventy-nine) only is due under the Bengal Municipal Act, 1932, in respect of taxes, etc., recoverable under the said Act, this is to give notice under section 525 of the Act that unless the amount recoverable be paid, the aforesaid holdings will be sold to the highest bidder after the expiration of the prescribed period.

R. BOSE, Chairman.

Municipal Office, Pabna, the 25th March 1937.

(729—1)

In the Court of the Sub-Judge, Dinajpur.

EXECUTION CASE No. 100 OF 1936 (MORTGAGE).

Nagendra Behari Roy Chowdhury, decree-holder,

versus

Rabindra Chandra Chowdhury and five others, judgment-debtors.

THE following 17 mauzas in police-station Gadagari, pargana Kazihata, appertaining to the 5 annas share in the mahal Maharapur in tauzi No. 386 with separate account No. 3/1 of the Rajshahi Collectorate and the annual revenue being Rs. 315-2-6pies being the mortgaged property in the suit, will be sold by the Nazir of the Dinajpur Judge's Court at 12 noon on the 3rd May 1937. The estimated value of the property is Rs. 3,000:—

List of mauzas.

(1) Mahrapur.
(2) Delsangpur.
(3) Joubanbasail.
(4) Hapania.
(5) Shimla.
(6) Parlia.
(7) Nezampur.
(8) Elaipur.
(9) Jouban.
(10) Ulipur.
(11) Raghunathpur.
(12) Sonarbong.
(13) Shreeballavpur.
(14) Dangapara.
(15) Angarpur.
(16) Kachuarpara.
(17) Jotemohan.

K. B. SEN, Sub-Judge.

Dinajpur,
The 25th March 1937.

(690—1)

SALE NOTICE.

In the Court of the Sub-Judge at Malda.

EXECUTION CASE No. 52 OF 1936 (MORTGAGE).

Jagabandhu Sarkar, decree-holder,

versus

Sachindra Nath Misra and others, judgment-debtors.

NOTICE is hereby given that the properties mentioned in the schedule below will be sold on the 20th May 1937, at 6 a.m., by the Nazir of the Sub-Judge, Malda, for Rs. 19,575-2-3 p. due to the above decree-holder from the judgment-debtors under order of the Sub-Judge, Malda:—

Schedule.

Lot No. 1.—All that interest of the abovenamed judgment-debtors in 1 anna, 7 gandas, 2 karas, 2 krantis share of the zamindary right of tauzi No. 82/10 of the Malda Collectorate being revenue Rs. 2,763-14-7 pies in 16 annas, which comprises mauzas Bhaluka, Degun, Khokra, Hariharpur, Masaldah, Narayanpur, Santoshpur, Par Bhaluka, Pipla Kasimpur, Dakhin Harischandrapur, Uttar Harischandrapur, Khanta, Janakinagar, Hardamnagar, Okhra Chandpara, Mirdadpur, Nizgaon Araidanga, Alangi, Soulmari, Rampur Uchitpur, Khidirgunj in the district of Malda and Kehunia, Nimole, Dhokaria, Rakhole in the district of Purnea and Rajshahi Diara Survey Haripur Gopi in the district of Malda.

Estimated value—Rs. 3,000.

All that interest of the abovenamed judgment-debtors in 1/3 share of 13 gandas, 3 karas, 1 kranti share of patni taluk in tauzi No. 82/10 of Malda Collectorate, recorded in C. S. Khatians No. 7, J. L. No. 175 of mauza Bhaluka, C. S. No. 7, J. L. No. 176 of Degun, C. S. No. 7, J. L. No. 75 of Khokra, C. S. No. 2, J. L. No. 144 of Harischandrapur, C. S. No. 29, J. L. No. 178 of mauza Masaldah, C. S. No. 8, J. L. No. 130 of mauza Narayanpur, C. S. No. 186, J. L. No. 98 of mauza Santoshpur, C. S. No. 12, J. L. No. 174 of mauza Par Bhaluka, C. S. No. 3, J. L. No. 127 of Pipla Kashimpur, C. S. No. 311, J. L. No. 101 of Dakhin Harischandrapur, C. S. No. 629, J. L. No. 102 of Uttar Harischandrapur, C. S. No. 3, J. L. No. 168 of mauza Hardamnagar in police-station Harischandrapur, district Malda; C. S. No. 7, J. L. No. 64 of Okhra Chandpara, C. S. No. 7, J. L. No. 131 of Mirdadpur, C. S. No. 12, J. L. No. 132 of Nizgaon Araidanga in police-station Ratua, district Malda; C. S. No. 7, J. L. No. 93 of Elangi, C. S. No. 7, J. L. No. 94 of Soulmari, C. S. No. 7, J. L. No. 181 of Rampur Uchitpur, C. S. No. nil, J. L. No. 24 of Khidirgunj in police-station Kharba, district Malda; C. S. No. nil, J. L. 261 of Kehunia in police-station Katihar, district Purnea; C. S. No. 5, J. L. No. 590 of Nimole, C. S. No. nil, J. L. No. 605 of Dhokoria, C. S. No. 3, J. L. No. 594 of Rakhole in police-station Kadua, district Purnea and C. S. No. nil, J. L. No. 28 of Rajshahi Diara Survey Haripur Gopi in the district of Malda.

Estimated value—Rs. 400.

Proprietor's name—Sarat Kamini Devi.

Lot No. 2.—All that interest of the abovenamed judgment-debtors in 1 anna and 4 pies share of zamindary right of tauzi No. 169/4 of Malda Collectorate bearing revenue Rs. 523-12 in 16 annas, which comprises mauzas Khopakati, Dakshin Gouripur, Talsur, Dakshin Bhakuria, Daulatnagar of Malda district; Teghra, Nima, Jafargunj, Bhabanipur, Sundari, Jhola, Bahadurpur, Tildanga of Purnea district.

Estimated value—Rs. 2,550.

All that interest of the abovenamed judgment-debtors in 1/3 share of 10 gandas, 2 karas, 2 krantis of patni taluk in tauzi No. 169/4 of Malda Collectorate, recorded in C. S. khatians No. 16, J. L. No. 158 of mauza Khopakati, C. S. No. 3, J. L. No. 167 of mauza Dakshin Gouripur, C. S. No. 6, J. L. No. 165 of mauza Talsur, C. S. No. 259, J. L. No. 160 of Dakshin Bhakuria, C. S. No. 588, J. L. No. 161 of Daulatnagar in police-station Harischandrapur, district Malda; J. L. No. 254 of mauza Teghra, J. L. No. 5 of Nima, J. L. No. 78 of Jafargunj, J. L. No. 351 of Bhabanipur, J. L. No. 353 of Sundari, J. L. No. 352 of Jhola, J. L. No. 354 of Bahadurpur, J. L. No. 355 of Tildanga in police-station Katihar, district Purnea, within the jama of Rs. 900.

Estimated value—Rs. 200.

Proprietor's name—Sarat Kamini Devi.

Lot No. 3.—All that interest of the abovenamed judgment-debtors in 1 anna, 4 pies share of zamindary right of tauzi No. 168/3 of Malda Collectorate paying revenue Rs. 983-13-9 in 16 annas, which comprises mauzas Kashimpur in police-station Kharba, Rampur, Harinkole in police-station Ratua, Sultannagar, Tetia, Jalalpur, Belshur, Malior in police-station Harischandrapur, district Malda.

Estimated value—Rs. 2,300.

All that interest of the abovenamed judgment-debtors in 2 2/3 pies share of patni right of tauzi No. 168/3 of Malda Collectorate, J. L. No. 101 of mauza Kashimpur in police-station Kharba; J. L. No. 141 of mauza Rampur, J. L. No. 144 of mauza Harinkole in police-station Ratua; J. L. No. 124 of mauza Sultannagar, J. L. No. 134 of mauza Tetia, J. L. No. 166 of mauza Jalalpur, J. L. No. 163 of mauza Belshur, J. L. No. 164 of mauza Malior in police-station Harischandrapur, district Malda.

Estimated value—Rs. 200.

Proprietor's name—Sarat Kamini Devi.

Lot No. 4.—All that interest of the abovenamed judgment-debtors in 1 anna, 4 pies share of zamindary right of tauzi No. 174/4 of Malda Collectorate paying revenue Rs. 1,058-14 in 16 annas, which comprises mauzas Par Bhaluka, Ratanpur, Kamalpur, Durgapur, Narattampur, Maniknagar, Surjyapur, Khidirgunj in police-station Ratua, dt. Malda.

Estimated value—Rs. 1,025.

All that interest of the abovenamed judgment-debtors in 2 2/3 pies share of patni right of tauzi No. 174/4 of Malda Collectorate within jama of Rs. 900, J. L. No. 174 of mauza Par Bhaluka, J. L. No. 2 of mauza Ratanpur, J. L. No. 3 of mauza Kamalpur, J. L. No. 14 of mauza Durgapur, J. L. No. 26 of mauza Narattampur, J. L. No. 4 of mauza Maniknagar, J. L. No. 23 of mauza Surjyapur, J. L. No. 17 of mauza Khidirgunj in police-station Ratua, district Malda.

Estimated value—Rs. 100.

Proprietor's name—Sarat Kamini Devi.

Lot No. 5.—All that interest of the abovenamed judgment-debtors in 2 annas, 2 gandas, 2 karas, 2 krantis share of the zamindary right in tauzi No. 159/3 of Malda Collectorate paying revenue of Rs. 277-5-5p. in 16 annas, comprising mauzas Haranathpur, Dakshin Mohindrapur, Mungole in police-station Harischandrapur, district Malda.

Estimated value—Rs. 400.

All that interest of the abovenamed judgment-debtors in 1/3 share of 1 anna, 1 ganda, 1 kara 1 kranti patni right of tauzi No. 159/3 of Malda Collectorate being rental of Rs. 900 in 16 annas, J. L. No. 108 of mauza Haranathpur, J. L. No. 109 of mauza Dakshin Mohindrapur, J. L. No. 100 of mauza Mungole in police-station Harischandrapur, district Malda.

Estimated value—Rs. 50.

Proprietor's name—Sarat Kamini Devi.

Lot No. 6.—All that interest of the abovenamed judgment-debtors in 2 annas, 1 3/5 pies share of the zamindary right in tauzi No. 158/4 of Malda Collectorate paying revenue Rs. 1,171-2-0 in 16 annas, which comprises mauzas Haranathpur, Dakshin Mohindrapur, Mungole in police-station Harischandrapur, district Malda.

Estimated value—Rs. 400.

All that interest of the abovenamed judgment-debtors in 1/3 share of 1 anna, 4/5 pies share of patni right in tauzi No. 158/4 of Malda Collectorate being rental of Rs. 900, J. L. No. 108, C. S. No. 11 of Haranathpur, J. L. No. 109, C. S. No. 159 of Dakshin Mohindrapur, J. L. No. 100, C. S. No. 2 of Mungole in police-station Harischandrapur, district Malda.

Estimated value—Rs. 50.

Proprietor's name—Sarat Kamini Devi.

Lot No. 7.—All that interest of the abovenamed judgment-debtors in 1 anna, 4 pies share of zamindary right of tauzi No. 471 of Malda Collectorate paying revenue Rs. 10-10-4½p., which comprises mauza Bhaluka in police-station Harischandrapur, district Malda.

Estimated value—Rs. 100.

All that interest of the abovenamed judgment-debtors in 2 2/3 pies share of patni right in tauzi No. 471 of Malda Collectorate within jama of Rs. 900, comprises mauza Bhaluka, J. L. No. 175, C. S. No. 288 in police-station Harischandrapur, district Malda.

Estimated value—Rs. 25.

Proprietor's name—Sarat Kamini Devi.

Lot No. 8.—All that interest of the abovenamed judgment-debtors in 2 annas, 9¼ pies share of patni right in tauzi No. 22 of Purnea Collectorate being rental Rs. 830-0-9p. in 5 annas 6¼ pies, which comprises mauzas Bhagabanpur, Ranipur, Uttar Mukundapur, Bighore, Doula, Dangi Mohendrapur, Bahadurpur in police-station Harischandrapur, district Malda; Nimole, Fatepur, Samaikole in police-station Kadua, district Purnea.

Estimated value—Rs. 800.

Proprietor's name—Syed Ashad Reza of village Painbagh in district Purnea.

All that interest in the abovenamed judgment-debtors in 5¼ pies share of Dar Patni right of tauzi No. 22 of Malda Collectorate bearing rental Rs. 131-0-6p. in 10½ pies share, J. L. No. 4, C. S. No. 37 of Bhagabanpur, J. L. No. 25, C. S. No. 7/8 of Ranipur, J. L. No. 35, C. S. No. 24/25 of Uttar Mukundapur, J. L. No. 31, C. S. No. 13/14 of Bighore, J. L. No. 33, C. S. No. 15/16 of Doula, Dangi Mohendrapur and Bahadurpur in police-station Harischandrapur, district Malda, J. L. No. 613, C. S. No. 3 of Nimole, J. L. No. 404, C. S. No. nil of Fatepur, J. L. No. 621, C. S. No. nil of Samaikole in police-station Kadua, district Purnea.

Estimated value—Rs. 400.

Proprietor's name—Syed Asad Reza of village Painbagh, district Purnea.

S. A. ALI, Sub-Judge.

Malda, the 16th March 1937.

(648—1)

NOTICE TO CREDITORS OF APPLICATION FOR DISCHARGE.

In the Court of the Sub-Judge at Asansol.

INSOLVENCY CASE No. 39 OF 1935.

H. A. Mann and Mrs. D. C. Mann, petitioners.

TAKE notice that the abovenamed insolvents have applied to this Court for their discharge, and that the 16th April 1937 has been fixed for hearing of their application.

J. P. BANERJEA, Sub-Judge.

Asansol, the 17th March 1937.

(691—1)

In the Court of the Sub-Judge at Asansol.

INSOLVENCY CASE No. 27 OF 1936.

Sitesh Chandra Adhikari, Guard, E. I. Railway (Ondal), insolvent.

TAKE notice that the insolvent abovenamed has filed a petition for final discharge on 17th March 1937, and that the 23rd April 1937 has been fixed for hearing thereof.

J. P. BANERJEA, Sub-Judge.

Asansol, the 23rd March 1937.

(692—1)

In the Court of the Sub-Judge at Asansol.

INSOLVENCY CASE No. 4 OF 1937.

Low Samuel of Burnpur, police-station and chouki Asansol, district Burdwan, petitioner.

TAKE notice that the insolvency petition filed by the abovenamed petitioner has been admitted, and that the 16th April 1937 has been fixed for hearing thereof.

J. P. BANERJEA, Sub-Judge.

Asansol, the 23rd March 1937.

(693—1)

In the Court of the Sub-Judge at Asansol.

INSOLVENCY CASE No. 5 OF 1937.

George Henry Williams of Asansol, petitioner.

TAKE notice that the petitioner aforesaid has been adjudged an insolvent on 19th March 1937, and that he has been directed to apply for his discharge within one year from the said date.

J. P. BANERJEA, Sub-Judge.

Asansol, the 25th March 1937.

(694—1)

NOTICE TO CREDITORS OF THE DATE OF HEARING OF AN INSOLVENCY PETITION.

Section 19 of the Provincial Insolvency Act, V of 1920.

In the Court of the District Judge at Chittagong.

INSOLVENCY APPLICATION No. 4 OF 1937.

WHEREAS debtor Nabin Chandra Barua, son of late Jadu Ram Barua, of Nanupur, police-station Fatikchari, district Chittagong, has applied to this Court, by a petition, dated the 16th day of March 1937, to be declared an insolvent under the Provincial Insolvency Act, V of 1920, and this is to give notice that the Court has fixed the 22nd day of April 1937 for the hearing of the aforesaid petition and the examination of the debtor.

S. K. DEY, for District Judge.

Chittagong, the 31st March 1937.

(735—1)

In the Court of the Deputy Commissioner at Darjeeling.

INSOLVENCY CASE No. 5 OF 1935.

Ranekbul Sing of Simkona, district Darjeeling, applicant.

WHEREAS the abovenamed applicant has applied to this Court by a petition for his discharge and the Court has fixed the 16th April 1937 for hearing of the petition, any one desiring to be represented in the matter may appear in person or by a duly authorised pleader before the undersigned on the date fixed above.

B. C. SEN, for Deputy Commissioner.

Darjeeling, the 25th March 1937.

(689—1)

In the Court of the District Judge of Dinajpur.

INSOLVENCY CASE No. 7 OF 1937.

Nabaitulla Sarker, petitioner.

NABAITULLA SARKER, son of late Id Mohammed, of Balukara, police-station Hemtabad, district Dinajpur, has applied to this Court to be adjudged insolvent.

The 22nd day of April 1937 has been fixed for hearing the application at Dinajpur.

S. C. MUKHERJI, for District Judge.

Dinajpur, the 30th March 1937.

(725—1)

In the Court of the District Judge of Hooghly.

NOTICE is hereby given, under clause (2) of section 12 of the Provincial Insolvency Act, V of 1920, to his creditors that the insolvency petition of Janaki Nath De, son of late Haridas De, of Haripal, thana Haripal, district Hooghly, has been admitted by this Court as No. 28 of 1937 and that the 24th April 1937 has been fixed for the hearing thereof

S. MUKHARJI, District Judge.

Chinsura, the 23rd March 1937.

(722—1)

In the Court of the District Judge of Hooghly.

NOTICE is hereby given, under clause (2) of section 12 of the Provincial Insolvency Act, V of 1920, to his creditors that the insolvency petition of Surjya Kumar Dauri, son of late Akshoy Kumar Dauri, of Cossipore, thana Jangipara, district Hooghly, has been admitted by this Court as No. 20 of 1937 and that the 24th April 1937 has been fixed for the hearing thereof.

S. MUKHERJI, District Judge.

Chinsura, the 19th March 1937.

(723—1)

In the Court of the District Judge of Hooghly.

NOTICE is hereby given, under clause (2) of section 12 of the Provincial Insolvency Act, V of 1920, to his creditors that the insolvency petition of Fakir Muhammad Mandal, son of late Tincowri Mandal, of Gupitala, thana Polba, district Hooghly, has been admitted by this Court as No. 29 of 1937, and that the 1st May 1937 has been fixed for the hearing thereof.

S. MUKHERJI, District Judge.

Chinsura, the 30th March 1937. (744—1)

In the Court of the District Judge of Hooghly.

NOTICE is hereby given, under clause (2) of section 12 of the Provincial Insolvency Act, V of 1920, to his creditors that the insolvency petition of Sheikh Abdul, son of late Sheikh Haoder, of Paikpara, thana Bhadreswar, district Hooghly, has been admitted by this Court as No. 30 of 1937, and that the 1st May 1937 has been fixed for the hearing thereof.

S. MUKHERJI, District Judge.

Chinsura, the 31st March 1937. (745—1)

In the Court of the Addl. District Judge of Hooghly at Howrah.

INSOLVENCY CASE No. 57 OF 1931.

NOTICE is hereby given that the order adjudicating Raghu Nandan Missir, son of late Surajbal Missir, of 64, Golam Hossain Sardar Lane, police-station Shibpur, district Howrah, has been annulled by this Court under section 39 of the Provincial Insolvency Act.

T. ROXBURGH, Addl. District Judge.

Howrah, the 18th March 1937. (732—1)

In the Court of the Addl. District Judge of Hooghly at Howrah.

NOTICE is hereby given under the Provincial Insolvency Act, V of 1920, to his creditors that the insolvency petition of Purna Chandra Mitra, son of late Nil Kanta Mitra, of 85, Khetra Mohan Banerjee Lane, thana Shibpur, district Howrah, has been admitted by this Court as No. 114 of 1936, and that the 23rd April 1937 has been fixed for the hearing thereof.

T. ROXBURGH, Addl. District Judge.

Howrah, the 31st March 1937.

(733—1)

In the Court of the Addl. District Judge of Hooghly at Howrah.

NOTICE is hereby given under the Provincial Insolvency Act, V of 1920, to his creditors that the insolvency petition of Ashutosh Paul, son of Satya Charan Paul, of Banupal Chak, thana Amta, district Howrah, has been admitted by this Court as No. 137 of 1936, and that the 9th April 1937 has been fixed for the hearing thereof.

T. ROXBURGH, Addl. District Judge.

Howrah, the 18th March 1937.

(734—1)

In the Court of the District Judge of Khulna.

INSOLVENCY CASE No. 7 OF 1936.

IT is hereby notified that (1) Pramatha Nath Das and (2) Manmatha Nath Das, sons of late Panchanan Das, of Kushadanga, police-station Kushadanga, district Khulna, have been adjudged as insolvents on 26th February 1937 and have been directed to apply for discharge within six months.

S. N. SEN, District Judge.

Khulna, the 30th March 1937.

(721—1)

In the Court of the District Judge of Noakhali.

INSOLVENCY CASE No. 9 OF 1936.

NOTICE is hereby given that Nowabjan Mia and Hanu Mia, sons of late Ahammod Ali Miaji, of Alaiyarpur, post office Daganbhuiya, police-station Feni, district Noakhali, having applied to this Court for their discharge under section 41 of the Provincial Insolvency Act, the 24th day of April 1937 has been set down for hearing of the application.

S. K. SEN, District Judge.

Noakhali, the 30th March 1937.

(724—1)

ORDER OF ADJUDICATION.

In the Court of the District Judge of Noakhali.

INSOLVENCY CASE No. 17 OF 1936.

In the matter of Hamid Ullah Patari, son of late Abdul Gani Patari, of Charmandal, police-station Lakshmipur, district Noakhali, debtor-petitioner.

PURSUANT to a petition, dated the 10th October 1936, filed by the abovenamed debtor and on reading the application and on hearing the debtor it is ordered that the debtor be and the same is hereby adjudged insolvent.

Dated the 6th day of March 1937.

S. K. SEN, District Judge

(746—1)

In the Court of the District Judge of Rajshahi.

INSOLVENCY CASE No. 9 OF 1937.

NOTICE is hereby given that Isab Pramanik, son of late Beni Pramanik, of Mangalpara, police-station Puthia, district Rajshahi, has applied under Act V of 1920 to be adjudged an insolvent and that 24th April 1937 has been fixed for hearing the application.

[ILLEGIBLE], for District Judge.

Rajshahi, the 1st April 1937.

(731—1)

ORDER OF ADJUDICATION.

Section 27 of the Provincial Insolvency Act, V of 1920.

In the Court of the District Judge at Alipore.

INSOLVENCY APPLICATION No. 33 OF 1936.

PURSUANT to a petition, dated 11th September 1936, filed against Basanta Kumar Ray and Sons, a firm at Sahapur, and its partners Probodh Kumar Ray and others and on the application of Bejoy Kumar Addy and others of Chetla, Alipore, creditors, and on reading their application and hearing their pleader, it is ordered that the debtors be and the said debtors are hereby adjudged insolvents.

It is further ordered that the debtors do apply for their discharge on or before 14th March 1938.

Dated this 15th day of March 1937.

M. H. B. LETHBRIDGE, District Judge.

(726—1)

ORDER OF ADJUDICATION.

Section 27 of the Provincial Insolvency Act, V of 1920.

In the Court of the District Judge at Alipore.

INSOLVENCY APPLICATION No. 36 OF 1936.

PURSUANT to a petition, dated 6th October 1936, filed by Bhupendranath Sinha of 82A, Charakdanga Road, police-station Beliaghata, 24-Parganas, debtor, and on the application of the debtor himself, and on reading his application and hearing his pleader, it is ordered that the debtor be and the said debtor is hereby adjudged insolvent.

It is further ordered that the debtor do apply for his discharge within one year from this date, i.e., by 14th March 1938.

Dated this 15th day of March 1937.

M. H. B. LETHBRIDGE, District Judge.

(727—1)

NOTICE TO CREDITORS OF APPLICATION FOR DISCHARGE.

Section 41 (1) of the Provincial Insolvency Act, V of 1920.

In the Court of the District Judge at Alipore.

INSOLVENCY CASE No. 38 OF 1935.

Annada Prasad Ghosh of 83, Barrackpore Trunk Road, Chitpur, 24-Parganas, applicant.

TAKE notice that the abovenamed insolvent has applied at the Court for his discharge, and that the Court has fixed the 14th day of June 1937 at 11 o'clock for hearing the application.

Dated this 31st day of March 1937.

M. H. B. LETHBRIDGE, District Judge.

(736—1)

In the Court of the District Judge of 24-Parganas.

INSOLVENCY CASE No. 9 OF 1937.

Nrishingha Prasad Bose of 32, Talpukur Road, Beliaghata, 24-Parganas, applicant.

To Madhab Lall Mehta and others of 23, Banstolla Street, Calcutta, and others, creditors.

ON the 25th day of March 1937 it was ordered that the matter of the petition of the applicant be heard on the 26th day of April 1937, and that the said applicant do attend to be examined by this Court on that date.

M. H. B. LETHBRIDGE, District Judge.

Alipore, the 31st March 1937.

(737—1)

In the Court of the District Judge of 24-Parganas.

INSOLVENCY CASE No. 10 OF 1937.

Durga Prasad Patodia of 48, Chakraberia Road, South, Bhowanipore, 24-Parganas, applicant.

To Jibanram Sewbux of 180, Harrison Road, Calcutta, and others, creditors.

ON the 25th day of March 1937 it was ordered that the matter of the petition of the applicant be heard on the 26th day of April 1937, and that the said applicant do attend to be examined by this Court on that date.

M. H. B. LETHBRIDGE, District Judge.

Alipore, the 31st March 1937.

(738—1)

In the 4th Court of the Sub-Judge of 24-Parganas.

INSOLVENCY CASE No. 101 OF 1937.

Raj Kumar Chatterjee of 13/2A, Kedar Bose's Lane, Bhowanipore, Calcutta, applicant.

To Khirode Chandra Paul of 6, Rasik Ghose's Lane, Calcutta, and others, creditors.

ON the 19th day of March 1937 it was ordered that the matter of the petition of the applicant be heard on the 30th day of April 1937, and that the said applicant do attend to be examined by this Court on that date.

T. C. MUKHERJEE, Sub-Judge.

Alipore, the 22nd March 1937.

(695—1)

In the 4th Court of the Sub-Judge of 24-Parganas.

INSOLVENCY CASE No. 102 OF 1937.

Surja Prasad Shaw of 76, Paltapatty, Tallygunge, Calcutta, applicant.

To Ram Gopal Mahadeo of 5, Shibtola Road, Calcutta, and others, creditors.

ON the 15th day of March 1937 it was ordered that the matter of the petition of the applicant be heard on the 30th day of April 1937, and that the said applicant do attend to be examined by this Court on that date.

T. C. MUKHERJEE, Sub-Judge.

Alipore, the 16th March 1937. (696—1)

In the 4th Court of the Sub-Judge of 24-Parganas.

INSOLVENCY CASE No. 105 OF 1937.

Bishnu Charan Naiya of Majilpore, police-station Joynagore, 24-Parganas, applicant.

To Sm. Sukumari Dasi of Majilpore, police-station Joynagore, 24-Parganas, and others, creditors.

ON the 16th day of March 1937 it was ordered that the matter of the petition of the applicant be heard on the 30th day of April 1937, and that the said applicant do attend to be examined by this Court on that date.

T. C. MUKHERJEE, Sub-Judge.

Alipore, the 18th March 1937.

(697—1)

In the 4th Court of the Sub-Judge of 24-Parganas.

INSOLVENCY CASE No. 106 OF 1937.

Sailendra Nath Roy alias Sailendra Nath Roy Chowdhury of 13B, Chandra Mondal Lane, Kalighat, Calcutta, applicant.

To Kailash Prosad of 50, Muktaram Babu's Street, Calcutta, and others, creditors.

ON the 17th day of March 1937 it was ordered that the matter of the petition of the applicant be heard on the 30th day of April 1937, and that the said applicant do attend to be examined by this Court on that date.

T. C. MUKHERJEE, Sub-Judge.

Alipore, the 22nd March 1937.

(698—1)

In the 4th Court of the Sub-Judge of 24-Parganas.

INSOLVENCY CASE No. 108 OF 1937.

Nakumia of B. N. R. Marine Quarter, Garden Reach, Calcutta, applicant.

To Nazar Mahammed Khan Kabuli of 34, Rajnarayan Roy Chowdhury Ghat Road, post office Shibpore, Howrah, and others, creditors.

ON the 19th day of March 1937 it was ordered that the matter of the petition of the applicant be heard on the 30th day of April 1937, and that the said applicant do attend to be examined by this Court on that date.

T. C. MUKHERJEE, Sub-Judge.

Alipore, the 22nd March 1937.

(699—1)

In the 4th Court of the Sub-Judge of 24-Parganas.

INSOLVENCY CASE No. 109 OF 1937.

Mahammad Hossain of 2/1/B, Cantopher Lane, Entally, Calcutta, applicant.

To Abdul Satter of 29, Munshi Sadaruddin Lane, Barabazar, Calcutta, and others, creditors.

ON the 20th day of March 1937 it was ordered that the matter of the petition of the applicant be heard on the 30th day of April 1937, and that the said applicant do attend to be examined by this Court on that date.

T. C. MUKHERJEE, Sub-Judge.

Alipore, the 23rd March 1937.

(700—1)

In the 4th Court of the Sub-Judge of 24-Parganas.

INSOLVENCY CASE No. 110 OF 1937.

J. M. Parnall, the shunter of E. B. Railway, Sealdah, applicant.

To Mohadeo Lall & Bros. of 1, Tikiapara Road, Howrah, and others, creditors.

ON the 20th day of March 1937 it was ordered that the matter of the petition of the applicant be heard on the 30th day of April 1937, and that the said applicant do attend to be examined by this Court on that date.

T. C. MUKHERJEE, Sub-Judge.

Alipore, the 22nd March 1937.

(701—1)

In the 4th Court of the Sub-Judge of 24-Parganas.

INSOLVENCY CASE No 111 OF 1937.

Abdul Wahid of 105/3, Ultadanga Main Road, Manicktola, 24-Parganas, applicant.

To Sk. Mahammed Naseruddin and others of mohalla Sheikhpura, post office Sasaram, district Sahabad, and another, creditors.

ON the 22nd day of March 1937 it was ordered that the matter of the petition of the applicant be heard on the 7th day of May 1937, and that the said applicant do attend to be examined by this Court on that date.

T. C. MUKHERJEE, Sub-Judge.

Alipore, the 23rd March 1937.

(702—1)

NOTICE TO CREDITORS OF APPLICATION FOR DISCHARGE.

Section 41 (1) of the Provincial Insolvency Act, V of 1920.

In the 4th Court of the Sub-Judge at Alipore.

INSOLVENCY CASE No. 453 OF 1935

Brojendra Lal Bhaduri, Train Examiner, E. B. Railway, applicant.

TAKE notice that the abovenamed insolvent has applied at the Court for his discharge, and that the Court has fixed the 30th day of April 1937 at 11 o'clock for hearing the application.

Dated this 15th day of March 1937.

T. C. MUKHERJEE, Sub-Judge.

(703—1)

NOTICE TO CREDITORS OF APPLICATION FOR DISCHARGE.

Section 41 (1) of the Provincial Insolvency Act, V of 1920.

In the 4th Court of the Sub-Judge at Alipore.

INSOLVENCY CASE No. 163 OF 1936

Manilal Burman of Khorda, police-station Diamond Harbour, 24-Parganas, applicant.

TAKE notice that the abovenamed insolvent has applied at the Court for his discharge, and that the Court has fixed the 7th day of May 1937 at 11 o'clock for hearing the application.

Dated this 20th day of March 1937.

T. C. MUKHERJEE, Sub-Judge.

(704—1)

NOTICE TO CREDITORS OF APPLICATION FOR DISCHARGE.

Section 41 (1) of the Provincial Insolvency Act, V of 1920.

In the 4th Court of the Sub-Judge at Alipore.

INSOLVENCY CASE No. 192 OF 1936.

Mono Mohan Roy of 63, Tallygunge Road, Calcutta, applicant.

TAKE notice that the abovenamed insolvent has applied at the Court for his discharge, and that the Court has fixed the 7th day of May 1937 at 11 o'clock for hearing the application.

Dated this 22nd day of March 1937.

T. C. MUKHERJEE, Sub-Judge.

(705—1)

NOTICE TO CREDITORS OF APPLICATION FOR DISCHARGE.

Section 41 (1) of the Provincial Insolvency Act, V of 1920.

In the 4th Court of the Sub-Judge at Alipore.

INSOLVENCY CASE No. 271 OF 1936.

Khapri Kahar of Gouripore, Naihati, 24-Parganas, applicant.

TAKE notice that the abovenamed insolvent has applied at the Court for his discharge, and that the Court has fixed the 30th day of April 1937 at 11 o'clock for hearing the application.

Dated this 16th day of March 1937.

T. C. MUKHERJEE, Sub-Judge.

(706—1)

ORDER OF ADJUDICATION.

Section 27 of the Provincial Insolvency Act, V of 1920.

In the 4th Court of the Sub-Judge at Alipore.

INSOLVENCY APPLICATION No. 333 OF 1936.

PURSUANT to a petition, dated 21st July 1936, filed by Mahabub Mia of Titagarh Puratan Bazar, post office Titagarh, 24-Parganas, debtor, and on the application of the debtor himself and on reading his application and hearing his pleader, it is ordered that the debtor be and the said debtor is hereby adjudged insolvent.

It is further ordered that the debtor do apply for his discharge by 13th September 1937.

Dated this 13th day of March 1937.

T. C. MUKHERJEE, Sub-Judge.

(707—1)

ORDER OF ADJUDICATION.

Section 27 of the Provincial Insolvency Act, V of 1920.

In the 4th Court of the Sub-Judge at Alipore.

INSOLVENCY APPLICATION No. 409 OF 1936.

PURSUANT to a petition, dated 1st September 1936, filed by Bhagaban Das Teli of Titagarh Banshbagan, 24-Parganas, debtor, and on the application of the debtor himself and on reading his application and hearing his pleader, it is ordered that the debtor be and the said debtor is hereby adjudged insolvent.

It is further ordered that the debtor do apply for his discharge by 13th September 1937.

Dated this 13th day of March 1937.

T. C. MUKHERJEE, Sub-Judge.

(708—1)

ORDER OF ADJUDICATION.

Section 27 of the Provincial Insolvency Act, V of 1920.

In the 4th Court of the Sub-Judge at Alipore.

INSOLVENCY APPLICATION No. 456 OF 1936.

PURSUANT to a petition, dated 26th September 1936, filed by Dharmadas Mukherjee of Titagarh Jute Mill, police-station Khardah, 24-Parganas, debtor, and on the application of the debtor himself and on reading his application and hearing his pleader, it is ordered that the debtor be and the said debtor is hereby adjudged insolvent

It is further ordered that the debtor do apply for his discharge by 13th September 1937.

Dated this 13th day of March 1937.

T. C. MUKHERJEE, Sub-Judge.

(709—1)

ORDER OF ADJUDICATION.

Section 27 of the Provincial Insolvency Act, V of 1920.

In the 4th Court of the Sub-Judge at Alipore.

INSOLVENCY APPLICATION No. 460 OF 1936.

PURSUANT to a petition, dated 30th September 1936, filed by Sheik Pir Bux of Titagarh, police-station Titagarh, 24-Parganas, debtor, and on the application of the debtor himself and on reading his application and hearing his pleader, it is ordered that the debtor be and the said debtor is hereby adjudged insolvent.

It is further ordered that the debtor do apply for his discharge by 13th September 1937.

Dated this 13th day of March 1937.

T. C. MUKHERJEE, Sub-Judge.

(710—1)

ORDER OF ADJUDICATION.

Section 27 of the Provincial Insolvency Act, V of 1920.

In the 4th Court of the Sub-Judge at Alipore.

INSOLVENCY APPLICATION No. 466 OF 1936.

PURSUANT to a petition, dated 2nd October 1936, filed by Monoranjan Bose of 23-7-1, Tallygunge Road, police-station Tollygunge, 24-Parganas, debtor, and on the application of the debtor himself and on reading his application and hearing his pleader, it is ordered that the debtor be and the said debtor is hereby adjudged insolvent.

It is further ordered that the debtor do apply for his discharge by 13th September 1937.

Dated this 13th day of March 1937.

T. C. MUKHERJEE, Sub-Judge.

(711—1)

ORDER OF ADJUDICATION.

Section 27 of the Provincial Insolvency Act, V of 1920.

In the 4th Court of the Sub-Judge at Alipore.

INSOLVENCY APPLICATION No. 494 OF 1936.

PURSUANT to a petition, dated 18th November 1936, filed by Srinath Bhunia of Rajabagan, police-station Metiabruz, 24-Parganas, debtor, and on the application of the debtor himself and on reading his application and hearing his pleader, it is ordered that the debtor be and the said debtor is hereby adjudged insolvent.

It is further ordered that the debtor do apply for his discharge by 13th September 1937.

Dated this 13th day of March 1937.

T. C. MUKHERJEE, Sub-Judge.

(712—1)

ORDER OF ADJUDICATION.

Section 27 of the Provincial Insolvency Act, V of 1920.

In the 4th Court of the Sub-Judge at Alipore.

INSOLVENCY APPLICATION No. 503 OF 1936.

PURSUANT to a petition, dated 30th November 1936, filed by Kalipada Mondal of Ganapatipore, Dack Naihati, Basirhat, 24-Parganas, debtor, and on the application of the debtor himself and on reading his application and hearing his pleader, it is ordered that the debtor be and the said debtor is hereby adjudged insolvent.

It is further ordered that the debtor do apply for his discharge by 13th September 1937.

Dated this 13th day of March 1937.

T. C. MUKHERJEE, Sub-Judge.

(713—1)

ORDER OF ADJUDICATION.

Section 27 of the Provincial Insolvency Act, V of 1920.

In the 4th Court of the Sub-Judge at Alipore.

INSOLVENCY APPLICATION No. 505 OF 1936.

PURSUANT to a petition, dated 2nd December 1936, filed by Fazlay Rahman of 264, Upper Circular Road, Calcutta, debtor, and on the application of the debtor himself and on reading his application and hearing his pleader, it is ordered that the debtor be and the said debtor is hereby adjudged insolvent.

It is further ordered that the debtor do apply for his discharge by 13th September 1937.

Dated this 13th day of March 1937.

T. C. MUKHERJEE, Sub-Judge.

(714—1)

ORDER OF ADJUDICATION.

Section 27 of the Provincial Insolvency Act, V of 1920.

In the 4th Court of the Sub-Judge at Alipore.

INSOLVENCY APPLICATION No. 509 OF 1936.

PURSUANT to a petition, dated 5th December 1936, filed by Sheik Hikmat Ali of Manumahalla, police-station Tritole, 24-Parganas, debtor, and on the application of the debtor himself and on reading his application and hearing his pleader, it is ordered that the debtor be and the said debtor is hereby adjudged insolvent.

It is further ordered that the debtor do apply for his discharge by 13th September 1937.

Dated this 13th day of March 1937.

T. C. MUKHERJEE, Sub-Judge.

(715—1)

ORDER OF ADJUDICATION.

Section 27 of the Provincial Insolvency Act, V of 1920.

In the 4th Court of the Sub-Judge at Alipore.

INSOLVENCY APPLICATION No. 6 OF 1937.

PURSUANT to a petition, dated 5th January 1937, filed by Ganesh Chandra De of 36, Bridge Road Alipore, Calcutta, debtor, and on the application of the debtor himself and on reading his application and hearing his pleader, it is ordered that the debtor be and the said debtor is hereby adjudged insolvent.

It is further ordered that the debtor do apply for his discharge by 13th September 1937.

Dated this 13th day of March 1937.

T. C. MUKHERJEE, Sub-Judge.

(716—1)

ORDER OF ADJUDICATION.

Section 27 of the Provincial Insolvency Act, V of 1920.

In the 4th Court of the Sub-Judge at Alipore.

INSOLVENCY APPLICATION No. 7 OF 1937.

PURSUANT to a petition, dated 5th January 1937, filed by Fakira Show of 23, Ganesh Sarkar Lane, Kidderpore, Calcutta, debtor, and on the application of the debtor himself and on reading his application and hearing his pleader, it is ordered that the debtor be and the said debtor is hereby adjudged insolvent.

It is further ordered that the debtor do apply for his discharge by 13th September 1937.

Dated this 13th day of March 1937.

T. C. MUKHERJEE, Sub-Judge.

(717—1)

ORDER OF ADJUDICATION.

Section 27 of the Provincial Insolvency Act, V of 1920.

In the 4th Court of the Sub-Judge at Alipore.

INSOLVENCY APPLICATION No. 8 OF 1937.

PURSUANT to a petition, dated 5th January 1937, filed by F. Giordano of 78, Traffic Quarters, Sealdah, 24-Parganas, debtor, and on the application of the debtor himself and on reading his application and hearing his pleader, it is ordered that the debtor be and the said debtor is hereby adjudged insolvent.

It is further ordered that the debtor do apply for his discharge by 13th September 1937.

Dated this 13th day of March 1937.

T. C. MUKHERJEE, Sub-Judge.

(718—1)

ORDER OF ADJUDICATION.

Section 27 of the Provincial Insolvency Act, V of 1920.

In the 4th Court of the Sub-Judge at Alipore.

INSOLVENCY APPLICATION No. 9 OF 1937.

PURSUANT to a petition, dated 6th January 1937, filed by Sheik Abdul Bari alias Sheik Barick of 7, Kashaipara Lane, Park Circus, Calcutta, debtor, and on the application of the debtor himself and on reading his application and hearing his pleader, it is ordered that the debtor be and the said debtor is hereby adjudged insolvent.

It is further ordered that the debtor do apply for his discharge by 13th September 1937.

Dated this 13th day of March 1937.

T. C. MUKHERJEE, Sub-Judge.

(719—1)

ORDER OF ADJUDICATION.

Section 27 of the Provincial Insolvency Act, V of 1920.

In the 4th Court of the Sub-Judge at Alipore.

INSOLVENCY APPLICATION No. 12 OF 1937.

PURSUANT to a petition, dated 7th January 1937, filed by Sheik Abdul Barik of 39/22, Lockgate Road, police-station Chitpore, 24-Parganas, debtor, and on the application of the debtor himself and on reading his application and hearing his pleader, it is ordered that the debtor be and the said debtor is hereby adjudged insolvent.

It is further ordered that the debtor do apply for his discharge by 13th September 1937.

Dated this 13th day of March 1937.

T. C. MUKHERJEE, Sub Judge.

(720—1)

ORDER ANNULLING ADJUDICATION.

Section 43 of the Provincial Insolvency Act, V of 1920.

In the 4th Court of the Sub-Judge at Alipore.

INSOLVENCY APPLICATION No. 208 OF 1936.

Ganesh Bala Devi, applicant.

WHEREAS Ganesh Bala Devi of 28, Kalighat Road, Bhowanipore, Calcutta, debtor, does not proceed with her application for discharge within the specified time, it is ordered that the order of adjudication, dated 22nd June 1936, against the debtor be and the same is hereby annulled.

Dated this 16th day of March 1937.

T. C. MUKHERJEE, Sub-Judge.

ORDER ANNULLING ADJUDICATION.

Section 43 of the Provincial Insolvency Act, V of 1920.

In the 4th Court of the Sub-Judge at Alipore.

INSOLVENCY APPLICATION No. 251 OF 1936.

Enath Ali Molla, applicant.

WHEREAS Enath Ali Molla of Kashipore, police-station Budge Budge, 24-Parganas, debtor, neither appeared nor applied for discharge within the specified time, it is ordered that the order of adjudication, dated 14th September 1936, against the debtor be and the same is hereby annulled.

Dated this 15th day of March 1937.

T. C. MUKHERJEE, Sub-Judge.

ORDER ANNULLING ADJUDICATION.

Section 43 of the Provincial Insolvency Act, V of 1920.

In the 4th Court of the Sub-Judge at Alipore.

INSOLVENCY APPLICATION No. 323 OF 1936.

Priyanath Sarkar, applicant.

WHEREAS Priyanath Sarkar of Mollarchack, police-station Magrahat, 24-Parganas, debtor, neither appeared nor applied for discharge within the specified time, it is ordered that the order of adjudication, dated 14th September 1936, against the debtor be and the same is hereby annulled.

Dated this 15th day of March 1937.

T. C. MUKHERJEE, Sub-Judge.

MR. MADAN CHANDRA GHOSE intends to be enrolled as an Advocate of the Calcutta High Court.

(665—4)

RASH BEHARI MAZUMDAR intends to enrol himself as an Advocate of the High Court, Calcutta.

(686—4)

DHONESH CHANDRA MITRA, Pleader, desires to be enrolled as an Advocate of the High Court, Calcutta

(743—4)

Federal Public Service Commission.

APPLICATIONS are invited for the post of Research Officer to conduct practical research into the feeding of cattle at Departmental Farms in the United Provinces. (2) Post non-pensionable and temporary for five years. Probation one year. Service terminable by six months' notice on either side. (3) Pay:—Rs. 275—25—650. (4) Qualifications:—(a) M.Sc. degree in Chemistry or Honours degree in Science with Chemistry as special subject and (b) post-graduate training in Physiological Chemistry or Biochemistry. Practical experience in Research work on Animal Nutrition, preferably on Cattle, would be an additional qualification. (5) A candidate must be a British subject of Indian domicile. A subject of an Indian State who has obtained the necessary declaration under section 262(1) of the Government of India Act, 1935, also eligible. Age below 45. Women eligible. (6) Government servants eligible if permitted by their departments. A permanent Government servant, if appointed, will be allowed to retain his pensionary status. (7) Government reserve the right to prefer a resident of the United Provinces if such a candidate is on the list of most suitable candidates submitted by the Federal Public Service Commission. (8) Canvassing in any form will disqualify. (9) Last date for receipt of applications, which must be on the prescribed form, 11th May 1937. Prescribed application forms and further particulars may be obtained from the Secretary, Federal Public Service Commission, Delhi, up to 10th April 1937, thereafter Simla. Applicants for forms must mention the name of the post.

Delhi, the 1st April 1937. (747—1)

Federal Public Service Commission.

APPLICATIONS are invited for the post of Physical Assistant in the Indian Stores Department. (2) Post temporary and up to the 28th February 1938 in the first instance. Post non-pensionable. Probation six months. (3) Pay:— Rs. 150—10—300—Efficiency Bar—20—400. Pay of a Government servant, if appointed, will be fixed under the appropriate rules. If he has been in continuous Government employ since the 15th July 1931, and is entitled to the old scale of pay, his pay will be fixed in the corresponding old scale of Rs. 150—15—300—20—500. (4) Must possess a degree in Textile Technology of a University in India or the United Kingdom or a Diploma after a full course at a Technological Institute in India or the United Kingdom. Should have received subsequent experience in the physical testing and manufacture of cotton and woollen textile yarns and fabrics during a period of not less than three years. (5) Age must not exceed 30 years. Age limit may be relaxed in the case of Government servants. (6) Must be a Statutory Native of India. Women are eligible. (7) Government servants eligible if permitted to apply by their departments. A Government servant, if holding a permanent pensionable post, will, if confirmed in a permanent post in the Indian Stores Department, retain that status. (8) The Appointing Authority intends to appoint a Muslim if one is on the list of "Candidates most suitable for appointment" submitted by the Federal Public Service Commission. (9) Canvassing in any form will disqualify. (10) Last date for the receipt of applications, which must be on the prescribed form, 4th May 1937. Prescribed application forms and further particulars may be obtained from the Secretary, Federal Public Service Commission. Requisitions should be addressed to Delhi if they can reach there before the 10th April 1937, and thereafter to Kennedy House Annexe, Simla. Applicants for forms must mention the name of the post.

Delhi, the 1st April 1937. (748—1)

Federal Public Service Commission.

APPLICATIONS are invited for the post of Probationary Superintendent in the Northern India Salt Revenue Department. (2) Post permanent and pensionable. (3) Pay—for direct recruits—on probation: Rs. 150, on confirmation: Rs. 200—15—500. For Government servants who have been in continuous employ since 15th July 1931—on probation: Rs. 150, on confirmation: Rs. 250—50/3—600. The initial pay of a Government servant after confirmation will be fixed in accordance with the appropriate rules. (4) Must possess an Honours degree of a University with Chemistry as the main subject. (5) Age must not be less than 22 and not more than 25 years on the 1st April 1937. (6) Government servants eligible if permitted to apply by their departments. (7) Canvassing in any form will disqualify. (8) Last date for the receipt of applications, which must be on the prescribed form, 8th May 1937. Prescribed application forms and further particulars may be obtained from the Secretary, Federal Public Service Commission. Requisitions should be addressed to Delhi if they can reach there before the 10th April 1937, and thereafter to Kennedy House Annexe, Simla. Applicants for forms must mention the name of the post.

Delhi, the 1st April 1937. (749—1)

Draft Advertisement.

APPLICATIONS are invited from Muslim candidates for appointment as Professor of Philosophy and Logic in the Bengal Educational Service (Men's Branch) on Rs. 150—25—200—50/2—300—40/2—500—50/2—700 (efficiency bars after the 12th and 20th stages). The selected candidate will be appointed on probation for two years.

2. Applicants must:—

(i) be British subjects or subjects of a State of India,

(ii) not be over 45 years of age,

(iii) possess high academic qualifications in Philosophy and Logic and a satisfactory record of teaching experience,

(iv) furnish with their applications documentary proofs of their qualifications, teaching experience and age; also two certificates written not more than one year prior to the dates of their applications from two responsible persons not related to them testifying to their private character and stating that they are natural born British subjects or subjects of a State in India; these certificates must be in addition to any furnished from persons connected with their Colleges or Universities.

3. Canvassing in any form (direct or indirect) will be considered a disqualification.

4. Applications must be submitted to the Assistant Director of Public Instruction, Bengal, Writers' Buildings, Calcutta, on or before 15th April 1937.

The Bengal and Madras Service Family Pension Fund which is provisionally managed and assisted by Government has for its object the provision of monthly pensions for the maintenance of the widows and children of subscribers and is open, with certain exceptions, to all active and pensioned members of the Uncovenanted service of Government (except those serving under the Government of Bombay), and to Local Fund servants earning pensions from Government. Some of the special features of the fund are (1) that widowed daughters incapable of re-marriage or children labouring under such mental or bodily infirmities as incapacitate them from earning their livelihood or preclude the possibility of marriage (in case of a daughter) are admitted to its benefits; and (2) that subscribers to the Widows' and Daughters' branches are entitled to a refund of 30 per cent. of the premia paid, should the nominee predecease them after five years of admission. The second quinquennial valuation of the Fund has been completed by the Actuary to the Government of India, and his report discloses very favourable results. For forms of application and rules of the Fund apply to the Accountant-General, Bengal, Imperial Secretariat Buildings, Calcutta.

TO whomsoever it may concern, the following notice is hereby given that the Hon'ble Board of Revenue, Bengal, has by its order No. 822W., dated the 14th January 1937, declared Srijukta Indumati Devi Choudhurani, widow of late Babu Birendra Chandra Roy Choudhury, a disqualified proprietress of the Dhankora Court of Wards Estate No. I, Dacca, and has retained charge and is managing all her properties, moveable or immovable. No payment by any bank, company, corporation or any person should henceforth be made to her and all payments should be made to me on her behalf as her Manager under the Court of Wards. Any payment made to her will be at his own risk.

N. C. SEN, Manager,
Dhankora C. W. Estate No. I.

Banglabazar, Dacca, the 25th February 1937.

(666—3)

Lost.

THE Government Promissory Note No. 113985 of the 3 per cent. loan of 1896-97 for Rs. 500, originally standing in the names of Asha Kumari Debi and Santi Kumari Debi or either of them, the proprietresses by whom it was never endorsed to any other person having been lost, notice is hereby given that payment of the above note and the interest thereupon have been stopped at the Public Debt Office, Reserve Bank of India, Calcutta, and that application is about to be made for the issue of duplicate in favour of the proprietresses. The public are cautioned against purchasing or otherwise dealing with the abovementioned security.

Signature of the advertisers—Asha Kumari Debi and Santi Kumari Debi.

Residence—Jemo, Kandi post office, Murshidabad.

(642—3)

BOARD OF REVENUE, BENGAL.

A Group—Wards Branch.

ORDER No. 3316W.

UNDER provision of section 65 of Act IX (B. C.) of 1879, the Court of Wards hereby directs that its jurisdiction over the estate known as the Padua Gupta Estate in Chittagong which was taken charge of by the Court of Wards at the request of the District Judge of Chittagong under section 95 of the Bengal Tenancy Act (Act VIII of 1885) shall cease with effect from the forenoon of the 7th April 1937, subject to any contract entered into by the Court of Wards for the preservation or benefit of the estate.

By order of the Court of Wards, Bengal,
S. BANERJEE, Secretary.

Calcutta, the 24th February 1937.

(730—1)

Custom House Notice.

TO be sold by public auction at the Custom House, 1, Charnock Place, Calcutta, at 11-30 a.m., on Friday, the 9th April 1937, under section 119, Sea Customs Act—

4 cases whisky.

The goods will be on view at the Custom House, Baggage Shed, from 10 a.m. on the day of the sale.

They will be offered for sale in convenient lots.

G. N. BOWER, Collector of Customs.

Custom House, Calcutta, the 5th April 1937.

(753—1)

Road Cess Notification.

THE district board of Mymensingh decided at a special meeting held on the 19th February 1937 to levy road cess at the rate of six pies a rupee during 1937-38.

S. AHMAD, Chairman, District Board.

Mymensingh, the 4th March 1937.

(557—3)

Custom House Notice.

TO be sold by public auction at the Custom House, 1, Charnock Place, Calcutta, at 11-30 a.m., on Monday, the 12th April 1937, under section 119, Sea Customs Act—

44 cases jamie Stuart whisky.
20 cases rum.
4 cases whisky.

The goods will be on view at the Custom House, Baggage Shed, from 10 a.m. on the day of the sale.

They will be offered for sale in convenient lots.

G. N. BOWER, Collector of Customs.

Custom House, Calcutta, the 5th April 1937.

(754—1)

THE first meeting of the newly elected and nominated Commissioners of the Garden Reach Municipality was held in the Municipal Office on Friday, the 2nd April 1937, at 6 p.m., and the following Commissioners were elected as Chairman and Vice-Chairman :—

Mr. H. Wallace . Chairman.
Mr. Unsud Dowla .. Vice-Chairman.

H. WALLACE, Chairman.

Garden Reach Municipality, the 5th April 1937. (751—1)

NOTICE is hereby given pursuant to section 72 of the Indian Partnership Act that the firm of H. N. Datta & Co., as at present constituted, has been dissolved with effect from the 31st March 1937 by the retirement of Mr. D. N. Mitra, one of the partners. The business will as from that date be carried on by Messrs. H N. Datta, D. C. Mitra and A. K. Ghose as partners.

A. K. GHOSE,
one of the partners.

Calcutta,
The 31st March 1937. (741—1)

Estate Miss Margaret Maxtone, deceased.

PURSUANT to section 360 of Act XXXIX of 1925 and section 42 of Act XXVIII of 1866, the creditors and all persons interested in the estate of Miss Margaret Maxtone some time of Broomhall, Dunfermline, and late of Tynehead, British Columbia, Canada, who died at Tynehead, aforesaid, on the 9th day of March 1932, and Letters of Administration to whose estate were granted by the High Court, Calcutta, on the 8th day of March 1937, are hereby required to submit particulars of their claims to the undersigned on or before the 8th day of May 1937, after which date the Administrator will distribute the assets, having regard only to the claims of which notice shall then have been received.

ORR, DIGNAM & CO.,
Solicitors to the Administrator.

32, Dalhousie Square, South, Calcutta, the 31st March 1937. (728—1)

Notes.

PORTIONS of the following notes of the Calcutta Office of Issue are stated to have been destroyed, and payment of their value has been claimed by the person whose name is placed against the numbers. Any other person claiming a right to them is warned to communicate at once with the undersigned :—

Register No.	Number of Notes.	Value.	Name of claimant.
		Rs.	
W D 6-37	T/17, 222327	100	Abdul Jalil Biswas, son of Elahi Bux Biswas, village Jorpukhuria, post office Bamandi, district Nadia.
	T/17, 685829	100	
	T/17, 646167	100	
	T/17, 685830	100	
	T/17, 646166	100	
	T/17, 756364	100	
	T/17, 685832	100	
	T/17, 756365	100	
	T/17, 685831	100	
	T/17, 711659	100	
	T/17, 711660	100	
	T/17, 757796	100	
	T/17, 646165	100	
	T/17, 756366	100	
	T/17, 189287	100	

S. GUPTA, Currency Officer.

Reserve Bank of India, Issue Department, Calcutta, the 1st April 1937.

In the matter of the Indian Companies Act, 1913 and 1936,

and

In the matter of Quentin Loch, Limited (in voluntary liquidation).

MEMBERS VOLUNTARY WINDING UP.

NOTICE is hereby given that at an extraordinary general meeting of the members of the abovenamed Company duly convened and held at 5, Fairlie Place, Calcutta, on Monday, the twenty-second day of March 1937, the following resolution was passed as a special resolution:—

That the Company be wound up voluntarily as a members voluntary liquidation and that Mr. E. J. Carter, Mr. James Orr of 4, Lyons Range, Calcutta, and Mr. F. G. Roberts of 5, Fairlie Place, Calcutta, be and they are hereby appointed liquidators for the purpose of such winding up with joint and several powers at a remuneration to be later agreed with the shareholders.

F. G. ROBERTS, Chairman.

5, Fairlie Place, Calcutta, the 22nd March 1937.

(739—1)

In the matter of the Indian Companies Act, 1913 and 1936,

and

In the matter of Durward, Limited (in voluntary liquidation).

MEMBERS VOLUNTARY WINDING UP.

NOTICE is hereby given that at an extraordinary general meeting of the members of the abovenamed Company duly convened and held at 5, Fairlie Place, Calcutta, on Monday, the twenty-second day of March 1937, the following resolution was passed as a special resolution:—

That the Company be wound up voluntarily as a members voluntary liquidation and that Mr. E. J. Carter, Mr. James Orr of 4, Lyons Range, Calcutta, and Mr. F. G. Roberts of 5, Fairlie Place, Calcutta, be and they are hereby appointed liquidators for the purpose of such winding up with joint and several powers at a remuneration to be later agreed with the shareholders.

F. G. ROBERTS, Chairman.

5, Fairlie Place, Calcutta, the 22nd March 1937.

(740—1)

In the matter of the Indian Companies Act, 1913,

and

In the matter of Shome Brothers, Limited (in liquidation).

NOTICE is hereby given pursuant to section 217 that a meeting of the members of Shome Brothers, Limited (in liquidation), will be held on Saturday, the 8th May 1937, at 2 p.m. at 3, Clive Row, Calcutta, to receive liquidator's account showing how the winding up has been conducted and the property of the Company has been disposed of and also to receive any explanation which the liquidator wants to give thereof.

S. B. ROY, liquidator.

3, Clive Row, Calcutta,
The 31st March 1937.

(742—1)

In the matter of the Indian Companies Act, VII of 1937,

and

In the matter of Sujanagar Banking, Trading and Industrial Co., Ltd. (in liquidation).

NOTICE is hereby given that at an extraordinary general meeting of the shareholders held on 3rd January 1937, Babu Ekkari Banerji, B.L., has been appointed liquidator of the abovenamed Company in place of Mr. K. B. Ghatak, resigned.

K. N. SARKAR, Chairman.

78, Amherst Street, Calcutta, the 5th April 1937.

(752 -1)

In the matter of the Indian Companies Act

and

In the matter of the Brahmanbaria Luxmi Bank, Ltd. (in voluntary liquidation), Brahmanbaria, Tippera.

Section 206(1) of the Indian Companies Act.

NOTICE is hereby given that a special resolution for the purpose of voluntary winding up of the above Company was passed at an extraordinary general meeting of the Company held on the 1st April 1937 at 3 p.m. at the registered office of the Company by which the above Company was put into voluntary liquidation for the purpose of amalgamation of the Brahmanbaria Luxmi Bank, Ltd., with the Comilla Union Bank, Ltd., under the terms as approved of by the members in the said meeting, and Babu Binoybhushan Bordhan was appointed the liquidator of the said Brahmanbaria Luxmi Bank, Ltd.

BINOYBHUSHAN BORDHAN, Liquidator.

Brahmanbaria, the 3rd April 1937. (750 -1)

SPECIAL ARRANGEMENTS.

Printing of the "Calcutta Gazette" of 15th April 1937.

OWING to Gazetted holiday on the 13th April 1937 on account of Chaitra Sankranti, the following special arrangements have been made for the printing of the "Calcutta Gazette" that will issue on the 15th April 1937:—

All MSS. of notifications, declarations, etc., that are to appear in Part I of the "Calcutta Gazette" will be received in the Press up to 5 p.m. on Friday, the 9th April 1937, and all proofs must be returned to Press by 1 p.m. on Monday, the 12th April 1937.

Advertisements, notices, etc., intended for publication in Part II of the "Calcutta Gazette" will be accepted in the Press up to 5 p.m. on Friday, the 9th April 1937, and all proofs must be returned and cost deposited by 1 p.m. on Monday, the 12th April 1937.

Proofs of all other matter must be returned to Press not later than 1 p.m. on Monday, the 12th April 1937.

C. R. BATTERSBY, M.B.E.,

Supdt., Govt. Printing, Bengal.

Bengal Govt. Press, Alipore, the 30th March 1937.

Imperial Library.

Secretariat Buildings, 6, Esplanade East, Calcutta. Open on—

Week days and Saturdays from 10 a.m. to 7 p.m.
Sundays and Gazetted holidays from 2 p.m. to 5 p.m.

THE Imperial Library is also a Lending Library. It is free to all except children. There is no subscription to pay.

K. M. ASADULLAH, Librarian.

CINCHONA FACTORY PRODUCTS.

By order of the Government of Bengal Cinchona Factory Products as manufactured and packed at the Cinchona Factory, Mungpoo, Darjeeling district, will be sold and distributed by the Superintendent of the Presidency Jail, *in original packages* as received from the Mungpoo Factory, at the rates herein noted from the 1st May 1926 :—

Name of drug	Price per lb. in powder form. Taken at a time. For 60 lbs. and upwards.	For 6 lbs. and over but less than 60 lbs.	For any quantity less than 6 lbs.	Price in 5 grain tablets. 1,000 tablets.	500 tablets.	250 tablets.	Price by weight per lb.
	Rs.	Rs.	Rs.	Rs.	Rs. a.	Rs. a.	Rs.
Quinine Bisulphate ..	18	19	20	16	8 0	4 4	..
" Hydrobromide ..	23	24	25	20	10 0	5 4	..
" Bihydrobromide ..	26	27	28	23	11 8	6 0	..
" Salicylate ..	24	25	26	..	..	..	..
" Tannate ..30 per cent. 35 per cent.	14	15	16	..	..	..	14

N.B.—Packing free in tins, sizes 1 lb., 8 oz. and 4 oz. only. Packing in bottles or smaller sizes of tins extra.

Quinine Sulphate.

For 60 lbs. and upwards at a time .. Rs. 18 per lb.
For 6 lbs. and over but less than 60 lbs. at a time .. .. .. " 19 "
For any quantity less than 6 lbs. .. " 20 "

Crude Quinine Sulphate Powder .. Rs. 14 per lb.
Crude Quinine Sulphate Tablets .. " 12-8 "
Will be sold to Government departments, local authorities, hospitals, dispensaries and missionaries in the Bengal area of distribution.

Totaquina.

Irrespective of quantity .. Rs. 13-8 per lb.
For sale to hospitals and dispensaries in Bengal, Bihar, Orissa and Assam.

Quinine Hydrochloride.

For 60 lbs. and upwards at a time .. Rs. 23 per lb.
For 6 lbs. and over but less than 60 lbs. at a time .. .. .. " 24 "
For any quantity less than 6 lbs. .. " 25 "

Quinine Di-Hydrochloride.

For 60 lbs. and upwards at a time .. Rs. 25 per lb.
For 6 lbs. and over but less than 60 lbs. at a time .. .. .. " 26 "
For any quantity less than 6 lbs. .. " 27 "

Quinidine Sulphate.

For 60 lbs. and upwards at a time .. Rs. 20 per lb.
For 6 lbs. and over but less than 60 lbs. at a time .. .. .. " 21 "
For any quantity less than 6 lbs. .. " 22 "

Cinchonidine Sulphate.

For 60 lbs. and upwards at a time .. Rs. 25 per lb.
For 6 lbs. and over but less than 60 lbs. at a time .. .. .. " 26 "
For any quantity less than 6 lbs. .. " 27 "

Cinchonine Sulphate.

For 60 lbs. and upwards at a time .. Rs. 12 per lb.
For 6 lbs. and over but less than 60 lbs. at a time .. .. .. " 13 "
For any quantity less than 6 lbs. .. " 14 "

*Cinchona Febrifuge (Powder).

For 60 lbs. and upwards at a time .. Rs. 9 per lb.
For 6 lbs. and over but less than 60 lbs. at a time .. .. .. " 9 "
For any quantity less than 6 lbs. .. " 10 "

*Cinchona Febrifuge (Tablets).

For 60 lbs. and upwards at a time .. Rs. 10 per lb.
For 6 lbs. and over but less than 60 lbs. at a time .. .. .. " 10 "
For any quantity less than 6 lbs. .. " 11 "

Supply of Cinchona Febrifuge to all authorised indentors will be rationed in the proportion of 1½ of Cinchona Febrifuge to 1 of Quinine Sulphate at their existing prescribed prices.

Cinchona Bark (in 50 pound original bags).

Per bag .. .. .. Rs. 25.

4 grains Quinine Tablets.

Rs.	a.	
2	8	per box of 200 tablets (for Bengal and other provinces).
15	8	per lb.

5 grains Quinine Tablets.

Rs.	a.	
15	8	per lb. sold in 1 lb., ½ lb. and ¼ lb. tins.

5 grains Quinine Hydrochloride Tablets.

Rs.	a.	
20	0	per 1,000 tablets.
10	0	" 500 "
5	4	" 250 "

Packing free in tins, sizes 1 lb., 8 oz. and 4 oz. only. Packing in bottles or smaller sizes in tins extra.

5 grains Quinine Bihydrochloride Tablets.

Rs.	a.	
22	0	per 1,000 tablets.
11	0	" 500 "
6	0	" 250 "

Packing free in tins, sizes 1 lb., 8 oz. and 4 oz. only. Packing in bottles or smaller sizes in tins extra.

Transit charges extra in every case.

Quinine and Cinchona products will be sold by the Presidency Jail to (*a*) Local Governments and departments of Local Governments, (*b*) dispensaries and hospitals belonging to or managed by Local Governments and local authorities, (*c*) Municipalities, District Boards, Railways, Union Boards and other local authorities otherwise than for purposes of sale to the public, (*d*) Missions, (*e*) Government Medical Store Depot, Calcutta.

Provinces other than Bengal, Bihar, Orissa and Assam will get their supplies of Sulph. Quinine and Cinchona Febrifuge Powder and Tablets from the Director, Botanical Survey of India, Sibpur, Howrah.

Local sale at the jail gate from 10 a.m. to 3-30 p.m.

The system of payment is by—*Cash in advance*—by "*Treasury Challans*," "*Remittance Transfer Receipts*" or crossed "*Cheques*."

Indents unaccompanied by cash in advance will be sent Value Payable Post. Credit sale is not allowed except under special circumstances.

In the case of *Government officers* payments will be recovered by *Book Transfer, i.e., Countersigned Invoices*, in the event of *Cash* not accompanying the indent by "*Treasury Challans*," *Remittance Transfer Receipt or Cheque*.

2. Price and postage must accompany the price of the drug (when the drug is required by post).

The name of the Railway and Steamer Station or Post Office must be written distinctly when the parcels are required by Rail, Steamer or by Post. Railway parcels are sent by passenger train only.

A scale of postage is given below.

	1 oz.	2 ozs.	4 ozs.	½ lb.	¾ lb.	1 lb.
	As.	As.	As.	As.	As.	Rs. A.
Quinine Sulph. ..	..	..	7	7	11	0 11
Cinchona Feb. ..	..	..	7	7	11	0 11
Cinchona Feb. Tablets	..	..	7	7	11	0 11
Quinine Hydrochlor. ..	5	5	7	7	..	0 11
Quinine Di-hydrochlor.	5	5	7	7	..	0 11
Quinine Tablets ..	..	..	7	7	11	0 11
Totaquina ..	..	..	7	7	11	0 11

	1¼ lb.	2 lb.	3 lb.	4 lb.	5 lb.	6 lb.
	Rs. A.	Rs. A.	Rs. A.	Rs. A.	Rs. A.	Rs. A.
Quinine Sulph. ..	0 15	1 3	1 7	1 15	2 7	2 11
Cinchona Feb. ..	0 15	0 15	1 7	1 11	2 3	2 7
Cinchona Feb. Tablets	0 15	1 3	1 11	1 15	2 7	2 15
Quinine Hydrochlor. ..	0 15	1 3	1 7	1 15	2 7	2 11
Quinine Di-hydrochlor.	0 15	0 15	1 7	1 11	2 3	2 7
Quinine Tablets ..	0 15	0 15	1 7	1 11	1 15	2 3
Totaquina ..	0 15	1 3	1 7	1 15	2 7	2 11

Two different drugs are not packed in the same parcel and postage must be paid separately for each kind.

N.B.—Postage stamps are not accepted as revenue.

Government reserve the right to alter the price without notice.

Registered No. C207

The Calcutta Gazette

THURSDAY, APRIL 8, 1937.

PART V

Acts of the Indian Legislature assented to by the Governor-General and Ordinances promulgated under section 72 of the Government of India Act.

GOVERNMENT OF INDIA.

Legislative Department.

The following Act of the Indian Legislature received the assent of the Governor General on the 4th March, 1937, and is hereby promulgated for general information :—

ACT No. II OF 1937.

An Act further to amend the Indian Naval Armament Act, 1923, for a certain purpose.

WHEREAS it is expedient further to amend the Indian Naval Armament Act, 1923, for the purpose of giving effect in British India to the Treaty for the Limitation of Naval Armament and for the Exchange of Information concerning Naval Construction signed in London on behalf of His Majesty on the twenty-fifth day of March, 1936 ; It is hereby enacted as follows :— VII of 1923.

Short title.

1. This Act may be called the Indian Naval Armament (Amendment) Act, 1937.

Amendment of preamble to Act VII of 1923.

2. In the preamble to the Indian Naval Armament Act, 1923 (hereinafter referred to as the said Act), for the words beginning "Treaty for the Limitation of Naval Armament signed at Washington" and ending "signed at London on behalf of His Majesty on the twenty-second day of April, 1930" the following shall be substituted, namely :— VII of 1923.

"Treaty for the Limitation of Naval Armament and for the Exchange of Information concerning Naval Construction signed in London on behalf of His Majesty on the twenty-fifth day of March, 1936."

Amendment of section 2, Act VII of 1923.

3. In section 2 of the said Act, for clause (*c*) the following clause shall be substituted, namely :—

"(*c*) 'the Treaty' means the Treaty for the Limitation of Naval Armament and for the Exchange of Information concerning Naval Construction signed in London on behalf of His Majesty on the twenty-fifth day of March, 1936."

Amendment of section 4, Act VII of 1923.

4. To section 4 of the said Act the following sub-section shall be added, namely :—

"(*3*) Any person who, in pursuance of a licence granted under sub-section (*1*) before the commencement of the Indian Naval Armament (Amendment) Act, 1937, is engaged in building any vessel of war or in altering, arming or equipping any ship so as to adapt her for use as a vessel of war, or is about to despatch or deliver, or allow to be despatched or delivered, from any place within British India any ship which has been so built, altered, armed or equipped, either entirely or partly, within British India, shall upon written demand, furnish to the Local Government such designs and particulars as may be required by the Local Government for the purpose of securing the observance of the obligations imposed by the Treaty." II of 1937.

Amendment of section 5, Act VII of 1923.

5. In sub-section (*1*) of section 5 of the said Act, after the word and figure "section 3" the following shall be inserted, namely :—

"or fails to comply with the provisions of sub-section (*3*) of section 4".

Omission of the Schedule to Act VII of 1923.

6. The Schedule to the said Act shall be omitted.

G. H. SPENCE,

Secy. to he Govt. of India.

Registered No. C207

The Calcutta Gazette

THURSDAY, APRIL 8, 1937.

PART VI

Bills introduced in the Council of State and Legislative Assembly, Reports of Select Committees presented to the Council and Assembly, and Bills published under Rule 18 of the Indian Legislative Rules.

GOVERNMENT OF INDIA.

Legislative Assembly Department.

The following Bill* was introduced in the Legislative Assembly on the 27th February, 1937 :—

L. A. BILL No. 14 OF 1937.

A Bill to fix the duty on salt manufactured in, or imported by land into, certain parts of British India, to vary the excise duty on sugar leviable under the Sugar (Excise Duty) Act, 1934, to vary certain duties leviable under the Indian Tariff Act, 1934, to vary the excise duty on silver leviable under the Silver (Excise Duty) Act, 1930, to fix maximum rates of postage under the Indian Post Office Act, 1898, and to fix rates of income-tax and super-tax.

WHEREAS it is expedient to fix the duty on salt manufactured in, or imported by land into, certain parts of British India, to vary the excise duty on sugar leviable under the Sugar (Excise Duty) Act, 1934, to vary certain duties leviable under the Indian Tariff Act, 1934, to vary the excise duty on silver leviable under the Silver (Excise Duty) Act, 1930, to fix maximum rates of postage under the Indian Post Office Act, 1898, and to fix rates of income-tax and super-tax ; It is hereby enacted as follows :

XIV of 1934. XXXII of 1934. XVIII of 1930. VI of 1898.

Short title and extent.

1. (*1*) This Act may be called the Indian Finance Act, 1937.

*The Governor General has been pleased to accord the sanction required by section 67 (2) of the Government of India Act.

(2) It extends to the whole of British India, including British Baluchistan and the Sonthal Parganas.

Fixation of salt duty.

2. The provisions of section 7 of the Indian Salt Act, 1882, shall, in so far as they enable the Governor General in Council to impose by rule made under that section a duty on salt manufactured in, or imported into, any part of British India other than Burma or Aden, be construed as if, for the year beginning on the 1st day of April, 1937, they imposed such duty at the rate of one rupee and four annas per maund of eighty-two and two-sevenths pounds avoirdupois of salt manufactured in, or imported by land into, any such part, and such duty shall, for all the purposes of the said Act, be deemed to have been imposed by rule made under that section. XII of 1882.

Excise duty on sugar.

3. In sub-section (2) of section 3 of the Sugar (Excise Duty) Act, 1934, XIV of 1934.

(a) in clause (i) for the words "ten annas" the words "one rupee and five annas" shall be substituted, and

(b) in clause (ii) for the words "one rupee and five annas" the words "two rupees" shall be substituted.

4. In the First Schedule to the Indian Tariff Act, 1934— XXXII of 1934.

Import duty on sugar.

(a) in Item No. 17 for the words and figures "Rs. 9-1 per cwt." in the fourth column the following words and figures shall be substituted, namely—

"the rate at which excise duty is for the time being leviable on sugar, other than *khandsari* or palmyra sugar, produced in British India *plus* Rs. 7-4 per cwt."

Import duty on silver.

(b) in Item Nos. 61 (2) and 62 (1) for the words "two annas per ounce" in the fourth column the words "three annas per ounce" shall be substituted.

Excise duty on silver.

5. In sub-section (1) of section 3 of the Silver (Excise Duty) Act, 1930, for the words "two annas" the words "three annas" shall be substituted. XVIII of 1930.

Inland Postage rates.

6. For the year beginning on the 1st day of April, 1937, the Schedule contained in the First Schedule to this Act shall be inserted in the Indian Post Office Act, 1898, as the First Schedule to that Act. VI of 1898.

Income-tax and super-tax.

7. (1) Income-tax for the year beginning on the 1st day of April, 1937, shall be charged at rates applicable to the total income of each assessee the same, and increased in each case by the same fraction of the amount of the rate, as for the year beginning on the 1st day of April, 1936.

(2) The rates of super-tax for the year beginning on the 1st day of April, 1937, shall, for the purposes of section 55 of the Indian Income-tax Act, 1922, be the same rates, increased in each case by the same fraction of the amount of the rate, as for the year beginning on the 1st day of April, 1936. XI of 1922.

(3) For the purposes of sub-section (1) "total income" means total income as determined in accordance with the provisions of the Indian Income-tax Act, 1922. XI of 1922.

It is hereby declared that it is expedient in the public interest that clauses 3, 4 and 5 of this Bill shall have immediate effect under the Provisional Collection of Taxes Act, 1931. XVI of 1931.

SCHEDULE I.

Schedule to be inserted in the Indian Post Office Act, 1898.

(*See* section 6.)

THE FIRST SCHEDULE.

INLAND POSTAGE RATES.

(*See* section 7.)

Letters.

For a weight not exceeding one tola	One anna.
For every tola, or fraction thereof, exceeding one tola	Half an anna.

Postcards.

Single	Nine pies.
Reply	One and a half annas.

Book, Pattern and Sample Packets.

For the first two and a half tolas or fraction thereof	Six pies.
For every additional two and a half tolas or fraction thereof in excess of two and a half tolas.	Three pies.

Registered Newspapers.

For a weight not exceeding eight tolas	Quarter of an anna.
For a weight exceeding eight tolas and not exceeding twenty tolas	Half an anna.
For every twenty tolas, or fraction thereof exceeding twenty tolas	Half an anna.

Parcels.

For a weight not exceeding forty tolas	Four annas.
For every forty tolas, or fraction thereof, exceeding forty tolas	Four annas.

STATEMENT OF OBJECTS AND REASONS.

The object of this Bill is to continue for a further period of one year certain duties and taxes imposed under the Indian Finance Act, 1936, which would otherwise cease to have effect from the 1st April, 1937 ; and to increase the import and excise duties on silver and sugar.

2. Clause 2 provides for the continuance for a further period of one year of the existing provisions regarding salt duty. The duty of Rs. 1-4-0 per maund on salt remains liable to the additional duty imposed under section 5 of the Indian Finance (Supplementary and Extending) Act, 1931.

3. Clause 3 provides for the increase in the excise duty on *khandsari* sugar from 10 annas per cwt. to Rs. 1-5 per cwt. and on sugar, other than *khandsari* or palmyra, from Rs. 1-5 per cwt. to Rs. 2 per cwt.

4. Clause 4 provides for the increase in the import duty—

(1) on sugar from Rs. 9-1 per cwt. to the rate at which excise duty is for the time being leviable on sugar, other than *khandsari* or palmyra, *plus* Rs. 7-4 per cwt. and

(2) on silver from 2 annas an ounce to 3 annas an ounce.

5. Clause 5 provides for the increase in the excise duty on silver corresponding to the increase in the import duty.

6. Clause 6 provides for the continuance for a further period of one year of the present inland postage rates with the following alterations :—

(1) *Book, Pattern and Sample Packets.*—The present rate is nine pies for the first five tolas and six pies for every additional five tolas. It is proposed to reduce the rate to six pies for the first 2½ tolas and three pies for every additional 2½ tolas.

(2) *Parcels.*—It is proposed to eliminate the present rate of 2 annas for parcels weighing up to 20 tolas, so that all parcels weighing 40 tolas or less will be charged 4 annas.

7. Clause 7 provides for the continuance for a further period of one year of the existing rates of income-tax and super-tax.

8. The reasons for making the above changes have been fully explained in my budget speech.

NEW DELHI ; P. J. GRIGG.

The 27th February, 1937.

MD. RAFI,

Secy. to the Govt. of India.

Registered No. C207

Appendix to

The Calcutta Gazette

THURSDAY, APRIL 8, 1937.

General Jury List

Common Jury List

List of persons liable to serve on common Juries in the High Court of Judicature at Fort William in Bengal for the year ensuing from 1st May 1937 pursuant to Act V of 1898.

Remarks.—Errors in names and descriptions can be corrected on communication to the Office of the Clerk of the Crown. Revised list will be published on the 29th day of April 1937. Any person who deems himself for any reason wrongly included in the list should address the Clerk of the Crown on the subject immediately as the revised list will be final.

No.	Names.	Style or calling.	Residence or place of business.	Religion.
	A			
	Abraham, E	Measurer, Bengal Chamber of Commerce	2, Clive Street	Christian
	Abraham, S D	Inspector, Agency Department, E B R	3, Kaylaghat Street	Jew
	Acaster, Alfred George	Assistant, Bengal Chamber of Commerce	2, Clive Street	Christian
	Adams, G B	Sub-Accountant, Grindlay & Co, Ltd	6, Church Lane	ditto
	Adams, James Aloysius	Assistant, J B Norton & Sons, Ld	Norton Buildings	ditto
	Adamson, G A	Assistant, Mackinnon, Mackenzie & Co	16, Strand Road	ditto
	Adelaide, G E	Assistant, Mackinnon, Mackenzie & Co	8, Strand Road	ditto
	Ager, Eric Frank	Offg Asstt Superintendent, Operating Department, E I R	E I R House	ditto
	Aitkins, K P	Measurer, Bengal Chamber of Commerce	2, Clive Street	ditto
	Albert, Desmond	Assistant, Mackenzie Lyall & Co	5, Mission Row	ditto
	Alcock, R	Salesman, Alfred Herbert (India), Ld	13-3, Strand Road	ditto
	Allan, William O	Assistant, Lionel Edwards, Ld	D-1, Clive Buildings	ditto

Ambrose, G S	Contract Engineer, Associated Electrical Industries (India), Ld	A-3, Clive Buildings	ditto
Ames, Oswald Clarke	Assistant, Duncan Brothers & Co, Ld	101, Clive Street	ditto
Anania, Terence George	Assistant, D J Keymer & Co, Ld	4, Lyons Range	ditto
Anderson, D K	Sub-Accountant, Mercantile Bank of India, Ld	8, Clive Street	ditto
Anderson, J J	Assistant, J Thomas & Co	8, Mission Row	ditto
Anderson, John Chaplain	Assistant, W T Henley's Telegraph Works Co, Ld	Old Court House Corner	ditto
Anderson, R J	Assistant, Lionel Edwards, Ld	D-1, Clive Buildings	ditto
Andree, Ambrosa Lorenz	Journalist, *Statesman*, Ld	Statesman House	ditto
Andrew, Thomas Harold	Sub-Director of Programmes, all India Radio	1, Garstin Place	ditto
Andrew, W E	Assistant, J Thomas & Co	8, Mission Row	ditto
Andrews, E T	Assistant, McLeod & Co	28, Dalhousie Square	ditto
Andrews, L	Assistant, Roberts McLean & Co, Ld	101, Clive Street	ditto
Andrews, Percival Thomas	Assistant, Samuel Fitze & Co, Ld	26, Chowringhee	ditto
Angus, R MacGillivray	Assistant, Roberts McLean & Co, Ld	101, Clive Street	ditto
Anstiss, Leslie Herbert	Assistant, North British & Mercantile Insurance Co, Ld	101-1, Clive Street	ditto
Apcar, G J	Assistant, Heatly & Gresham, Ld	6, Waterloo Street	ditto
Aquilina, Frank	Assistant, Grahams Trading Co (India), Ld	6, Lyons Range	ditto

No.	Names.	Style or calling.	Residence or place of business.	Religion.
	Aquilina, John C	Assistant, Grahams Trading Co (India), Ld	6, Lyons Range	Christian
	Arakie, David	Assistant, Thorne's Ld	13, Ezra Street	ditto
	Archard, P W	Assistant, Barry & Co	2, Fairlie Place	ditto
	Archer, G W	Measurer, Bengal Chamber of Commerce	2, Clive Street	ditto
	Archer, W R	Assistant, Calcutta Claims Bureau	26, Dalhousie Square	ditto
	Armstrong, Ernest	Engineer Representative, The Mirrlees Watson Co, Ld	28, Grosvenor House	ditto
	Armstrong, G L	Assistant, Caledonian Insurance Co	8, Clive Street	ditto
	Arnold, J N	Assistant, Geo Henderson & Co, Ltd	101-1, Clive Street	ditto
	Arratoon, A E	Assistant, Lovelock & Lewes	4, Lyons Range	ditto
	Arratoon, E L	Teacher, Armenian College and Philanthropic Academy	39, Free School Street	ditto
	Arton, G O	Assistant, James Finlay & Co, Ld	1, Clive Street	ditto
	Ashmead, W K	Assistant, Standard Vacuum Oil Co	6, Church Lane	ditto
	Atherton, Frederick George	Assistant, G Atherton & Co (Eastern), Ld	8, Clive Street	ditto
	Atherton, John Bramall	Assistant, G Atherton & Co (Eastern), Ld	8, Clive Street	ditto
	Atkinson, Albert Allan	Salesman, C C Wakefield & Co, Ld	7, Royal Exchange Place	ditto
	Atkinson, T C	Assistant, Turner, Morrison & Co, Ld	6, Lyons Range	ditto
	Augustin, H	Overseer, P S Office, E I R	E I R House	ditto
	Augustin, N A	Assistant, Shaw, Wallace & Co	4, Bankshall Street	ditto
	Austin, C	Claims Inspector, Traffic Department, E B R	3, Kaylaghat Street	ditto

Averley, E	Works Foreman, Heatly & Gresham, Ld	6, Waterloo Street	ditto
Aviet, E E	Assistant, Shaw, Wallace & Co	4, Bankshall Street	ditto

B

Bacon, John Edward	Foreman, W Newman & Co, Ld	3, Old Court House Street	Christian.
Badelow, W J	Assistant, Balmer, Lawrie & Co, Ld	103, Clive Street	ditto
Bagnall, E V	Measurer, Bengal Chamber of Commerce	2, Clive Street	ditto
Baikie, Alexander Banks	Assistant Accountant, National Bank of India, Ld	104, Clive Street	ditto
Bailey, J A	Assistant, Roberts McLean & Co, Ld	101, Clive Street	ditto
Bailey, W E	Assistant, G E C (India), Ld	Magnet House, Chittaranjan Avenue, South.	ditto
Balcombe, L W	Assistant, Turner, Morrison & Co, Ld	6, Lyons Range	ditto
Baldassari, A E	Assistant. I G N & Ry Co, Ld	4, Fairlie Place	ditto
Banes, George	Assistant, Whiteaway Laidlaw & Co, Ld	7, Chowringhee	ditto
Bannerman, James Meiklejohn	Salesman, Lyall Marshall & Co	4, Fairlie Place	ditto
Banyard, Peter	Assistant, Begg, Dunlop & Co, Ld	2, Hare Street	ditto
Baptist, J M	Clerk, C M's Office, E I R	E I R House	ditto

No.	Names.	Style or calling.	Residence or place of business.	Religion.
	Baptiste, Dennis Vincent	Assistant, Hoare Miller & Co, Ld	5, Fairlie Place	Christian
	Baptiste, Edwin	Assistant, Ranken & Co, Ld	4, Old Court House Street	ditto
	Barclay, Ian Campbell	Assistant, Macneill & Co	2, Fairlie Place	ditto
	Barke, J H	Assistant, Ivan Jones, Ld	8, Dalhousie Square, East	ditto
	Barlow, C	Measurer, Bengal Chamber of Commerce	2, Clive Street	ditto
	Barlow, W E	Measurer, Bengal Chamber of Commerce	2, Clive Street	ditto
	Barnabas, M	Clerk, C M E's Office, E I R	E I R House	ditto
	Barnes, H L	Assistant, Lovelock & Lewes	4, Lyons Range	ditto
	Barnet, John Allan	Assistant, King Bros	102, Clive Street	ditto
	Barrett, Eric Lancelot	Bookseller, W Newman & Co, Ld	3, Old Court House Street	ditto
	Barrett, H C	Engineer, Hindusthan Engineering & Construction Co	10, Hastings Street	ditto
	Barry, Charles Victor	Assistant, Standard Vacuum Oil Co	6, Church Lane	ditto
	Basil, Nefton Arratoon	Assistant, Mulcott Belting Co, Ld	10, Government Place, East	ditto
	Bassett, B T	Accountant, Cutler Palmer & Co	10, Government Place, East	ditto
	Batchelor, Geo F F	Assistant, James Luke & Sons	7, Royal Exchange Place	ditto
	Bateman, C R	Measurer, Bengal Chamber of Commerce	2, Clive Street	ditto

Batra, F C	Assistant, Balmer Lawrie & Co, Ld	103, Clive Street	ditto
Batten, H A	Assistant Accountant, G E C (India), Ld	Magnet House, Central Avenue, South.	ditto
Battye, Harold	Assistant, Lovelock & Lewes	4, Lyons Range	ditto
Baxendine, John Young	Assistant Accountant, National Bank of India, Ld	104, Clive Street	ditto
Baxter, Ronald Ian	Artist, D J Keymer & Co, Ld	4, Lyons Range	ditto
Beadle, W W	Assistant, Macmillan & Co, Ld	294, Bowbazar Street	ditto
Beadon, J R H	Sub-Accountant, Mercantile Bank of India, Ld	8, Clive Street	ditto
Beard, Frederick Hugh	Showroom Manager, C E S C, Ld	Victoria House	ditto
Beath, D	Sub-Accountant, Chartered Bank of India, Australia & China	1-1, Clive Street	ditto
Beattie, James	Assistant, Balmer Lawrie & Co, Ld	103, Clive Street	ditto
Bebbington, H	Engineer, Chloride Elec Storage Company, Ld	4, Lyons Range	ditto
Beddoe, Robert Reginald	Assistant, Cox and Kings (Agents), Ld	5, Bankshall Street	ditto
Beedie, H	Assistant, J Thomas & Co	8, Mission Row	ditto
Begbie, F W (Capt)	Assistant, I G N & Ry Co, Ld	4, Fairlie Place	ditto
Begbie, Ralph Arnold	Assistant, Macneill & Co	2, Fairlie Place	ditto
Behura, Nathaniel	Meter-Reader Inspector, C E S C, Ld	Victoria House	ditto
Belchambers, G E	Clerk, Calcutta Mint	47, Strand Road	ditto
Belchambers, John Smeal	Assistant, Cox and Kings (Agents), Ld	5, Bankshall Street	ditto
Bell, Arthur Duncan	Assistant, W T Henley's Telegraph Works, Ld	Old Court House Corner	ditto

No.	Names.	Style or calling.	Residence or place of business.	Religion.
	Bell, A B	Sub-Accountant, Mercantile Bank of India, Ld	8, Clive Street	Christian
	Bell, J J C	Exporter and Importer, J J C Bell & Co	9, Clive Street	ditto
	Bellety, B	Assistant, Accountant-General's Office, Bengal	Treasury Buildings	ditto
	Bellety, G F	Assistant, Turner, Morrison & Co, Ld	6, Lyons Range	ditto
	Belletty, Stanislaus Rideout	Head Clerk, Royal Calcutta Turf Club	11, Russell Street	ditto
	Bennett, Edmund Thomas Randolph	Accountant, Cutler, Palmer & Co	10, Government Place East	ditto
	Bent, John Philip Howard	Assistant, Begg, Dunlop & Co, Ld	2, Hare Street	ditto
	Beresford, D'Souza Valentine	Assistant, T E Thomson & Co, Ld	9, Esplanade East	ditto
	Berry, J	Assistant, Turner, Morrison & Co, Ld	6, Lyons Range	ditto
	Bett, A M	Assistant, Jute Industries, Ld	1A, Hare Street	ditto
	Bevan, K W	Assistant, Lovelock & Lewes	4, Lyons Range	ditto
	Biber, Alfred Marsden	Assistant, T E Thomson & Co, Ld	9, Esplanade East	ditto
	Billane, John Michael	Assistant, Dunlop Rubber Co (India), Ld	42, Free School Street	ditto
	Billon, H E	Assistant, Barry & Co	2, Fairlie Place	ditto
	Binyon, J B	Assistant, Hall & Anderson, Ld	31, Chowringhee	ditto
	Birch, George	Engineer, Linotype & Machinery, Ld	21, Bowbazar Street	ditto
	Birch, Joseph James Netheriel	Assistant, Army & Navy Stores, Ld	41, Chowringhee	ditto
	Bird, Herbert	Assistant, Macneill & Co	2, Fairlie Place	ditto
	Bischoff, Gerald	Service Stn Manager, Walford Transport, Ld	71-73, Park Street	ditto

Blacker, C W	Draftsman, C M E's Office, E I R	E I R House	ditto
Blackford, Edward George	Boiler Inspector	40-1A, Free School Street	ditto
Blake, E P	Job Analysis Inspector, D A O's Office, E I R	E I R House	ditto
Blake, J H	Superintendent, Landing & Shipping, B I S N Co, Ld	8, Strand Road	ditto
Blake, Lionel Alfred	Assistant, T E Thomson & Co, Ld	9, Esplanade, East	ditto
Blake, P F	Assistant, Associated British Machine Tool Makers, Ld	6, Old Post Office Street	ditto
Blanche, Charles Lionel	Engineer, Greaves Cotton & Co, Ld	60, Dharamtala Street	ditto
Blenkiron, Benjamin	Assistant, Burmah Shell Co of India, Ld	Hongkong House	ditto
Blizzard, M W	Assistant, Standard Vacuum Oil Co	6, Church Lane	ditto
Bloud, A F	Measurer, Bengal Chamber of Commerce	2, Clive Street	ditto
Boase, E R	Sub-Accountant, Lloyds Bank, Ld	101-1, Clive Street	ditto
Bogaars, A E	Assistant, Balmer, Lawrie & Co, Ld	103, Clive Street	ditto
Bolst, Harold	Stenographer, Boots Pure Drug Co, Ld	10, Lal Bazar Street	ditto
Bomford, B C M	Assistant, D L Millar & Co, Ld	28, Dalhousie Square, West	ditto
Bonner, V E Peace	Assistant, Balmer Lawrie & Co, Ld	103, Clive Street	ditto
Borthwick, S G	Assistant Accountant, Port Commissioners' Office	Strand Road	ditto

No.	Names	Style or calling	Residence or place of business.	Religion.
	Bottrill, Maurice Edward	Sub-Accountant, Grindlay & Co, Ld	6, Church Lane	Christian
	Bourke, J W Neal	Assistant, Place Siddons & Gough	6, Lyons Range	ditto
	Bower, R H	Assistant, Imperial Chemical Industries (India), Ld	18, Strand Road	ditto
	Bowman, Edward	Publicity Clerk, C C M's Office, E I R	E I R House	ditto
	Boyce, G M	Sub-Accountant, Lloyds Bank, Ld	101-1, Clive Street	ditto
	Boyd, A	Engineer, W & T Avery, Ld	11, Crooked Lane	ditto
	Bradburn, George	Assistant, Whiteaway, Laidlaw & Co, Ld	7, Chowringhee	ditto
	Bradley, J M	Assistant, Mackinnon Mackenzie & Co	16, Strand Road	ditto
	Braganza, Manuel Anthony	Clerk, Prudential Assurance Co, Ld	Clive Buildings	ditto
	Bray, R P	Assistant, Jardine, Skinner & Co	4, Clive Row	ditto
	Bretherick, F	Assistant, Remington Rand, Inc	3, Council House Street	ditto
	Brewester, F, F R S A	Handwriting Expert	6, Hastings Street	ditto
	Bridge, Francis	Assistant, General Accident, Fire & Life Assurance Corpn, Ld	7, Hare Street	ditto
	Brierley, Walter Harry	Assistant, G D Peters (India), Ld	10, Clive Street	ditto
	Brims, James	Collection Manager, The British India Publishing Co	Stephen House	ditto
	Brindley, E C	Loading Supervisor, I G N & Ry Co, Ld	Armenian Ghat	ditto

Brindley, P W	Assistant Artist Engraver, Calcutta Mint	47, Strand Road	ditto
Brock, Edwin Harold	Assistant Manager, Baldwin Locomotive Works	5, Dalhousie Square	ditto
Brodie, Ernest Dingwarr	Assistant, Sinclair & Co	5, Commercial Buildings	ditto
Brooks, Eric Stanley	Assistant, South British Insurance Co, Ld	5, Clive Street	ditto
Brooks, J H	Assistant, Mather & Platt, Ld	7, Hare Street	ditto
Broom, Maurice Henry	Assistant, D J Keymer & Co, Ld	4, Lyons Range	ditto
Broughton, C	Assistant, Grahams Trading Co (India), Ld	6, Lyons Range	ditto
Brown, A B	Assistant, Ranken & Co, Ld	4, Old Court House Street	ditto
Brown, A W	Measurer, Bengal Chamber of Commerce	2, Clive Street	ditto
Brown, C C	Assistant, Balmer Lawrie & Co, Ld	103, Clive Street	ditto
Brown, Edward	Head Assistant, Office of the Inspector-General of Prisons, Bengal	Writers' Buildings	ditto
Brown, J A Campbell	Surveyor, Norman, Stewart & Co	9, Clive Street	ditto
Brown, N K	Assistant, Jessop & Co, Ld	93, Clive Street	ditto
Bryan, J E	Assistant, Imperial Bank of India	Strand Road	ditto
Bryden, William Donald	Assistant, Bengal Chamber of Commerce	2, Clive Street	ditto
Brydges, Charles	Assistant, Ralli Bros, Ld	16, Hare Street	ditto

No.	Names.	Style or calling.	Residence or place of business.	Religion.
	Bryson, Archibold Jordon Steuart	Assistant, Blackwood Bryson & Co, Ld	2, Mangoe Lane	Christian
	Bryson, David Gillespie	Assistant, Blackwood Bryson & Co Ld	2, Mangoe Lane	ditto
	Buchan, Walter	Superintendent of Circulation, *Statesman*, Ld	Statesman House	ditto
	Buike, E C	Measurer, Bengal Chamber of Commerce	2, Clive Street	ditto
	Buike, O R	Measurer, Bengal Chamber of Commerce	2, Clive Street	ditto
	Bull, Allen Henry	Salesman, Army and Navy Stores, Ld	41, Chowringhee	ditto
	Bull, H C	Measurer, Bengal Chamber of Commerce	2, Clive Street	ditto
	Burbridge, R	Assistant, Burn & Co, Ld	12, Mission Row	ditto
	Burgess, Percy Cyril	Stenographer, Army and Navy Stores, Ld	41, Chowranghee	ditto
	Burke, Albert Reginald	Assistant, D J Keymer, & Co, Ld	4, Lyons Range	ditto
	Burns, L G	Assistant, Balmer, Lawrie & Co, Ld	103, Clive Street	ditto
	Burrows, R J	Measurer, Bengal Chamber of Commerce	2, Clive Street	ditto
	Burtenshaw, Leslie Williams	Architect, Martin & Co	12, Mission Row	ditto
	Butcher, P L[G]	Assistant, Hall & Anderson	31, Chowringhee	ditto
	Byrne, Rowland Wilmot	Assistant, Gillanders, Arbuthnot & Co	8, Clive Street	ditto

Byron, Geoffrey	Assistant Accountant, Lloyds Bank, Ld	41, Chowringhee	ditto
Bywater, Newelyn	Assistant, Burmha Shell Co of India, Ld	Hongkong House	ditto

C

Cabral, L E	Measurer, Bengal Chamber of Commerce	2, Clive Street	Christian
Cairns, A C	Architect, Mackintosh Burn, Ld	8, Clive Street	ditto
Calder, James McBeath	Assistant, Macneill & Co	2, Fairlie Place	ditto
Cameron, J	Traffic Assistant, Calcutta Tramways Co, Ld	7, Church Lane	ditto
Campbell, H F	Assistant, Imperial Chemical Industries (India), Ld	18, Strand Road	ditto
Cantopher, G C	Dy Bullion Registrar, Calcutta Mint	47, Strand Road	ditto
Carapiet, C W	Foreman, G Rogers & Co	5, Dalhousie Square, East	ditto
Carapiet, N	Store-keeper, Geo Henderson & Co, Ld	101-1, Clive Street	ditto
Carpenter, E C	Assistant, Ranken & Co, Ld	4, Old Court House Street	ditto
Carrie, J	Assistant, Barry & Co	2, Fairlie Place	ditto
Carruthers, C	Assistant, Hall & Anderson, Ld	31, Chowringhee	ditto
Carson, H D	Assistant, Turner, Morrison & Co, Ld	6, Lyons Range	ditto
Carter, John	Assistant, Army & Navy Stores, Ld	41, Chowringhee	ditto

No.	Names.	Style or calling.	Residence or place of business.	Religion.
	Carter, Lancelot James	Assistant, C E S C, Ld	Victoria House	Christian
	Carter, William George	Assistant, A & J Main & Co, Ld	10, Clive Street	ditto
	Carvalho, Matthew Joseph	Engineer, F & C Osler, Ld	12, Old Court House Street	ditto
	Carvey, P G	Measurer, Bengal Chamber of Commerce	2, Clive Street	ditto
	Cashmore, G L	Sub-Accountant, Grindlay & Co, Ld	6, Church Lane	ditto
	Castellari, Edwin Alfred	Assistant, J & R Hutchison, Ld	29, Waterloo Street	ditto
	Castle, Norman	Assistant, Whiteaway, Laidlaw & Co, Ld	7, Chowranghee	ditto
	Cattell, E. H.	Assistant Accountant, Lloyds Bank, Ld	101-1, Clive Street	ditto
	Catto, William Ewan	Assistant, Andrew Yule & Co, Ld	8, Clive Row	ditto
	Champness, F B	Engineer, G E C (India), Ld	Magnet House, Chittaranjan Avenue South.	ditto
	Chaplin, Hugh Archie	Assistant, Ralli Bros, Ld	16, Hare Street	ditto
	Charlton, Cyril	Accountant, T E Thomson & Co, Ld	9, Esplanade, East	ditto
	Chew, O A	Assistant, Grahams Trading Co (India), Ld	6, Lyons Range	ditto
	Chiodetti, J S	Assistant, Turner, Morrison & Co, Ld	6, Lyons Range	ditto
	Clare, John Arnold	Assistant, Ralli Bros, Ld	16, Hare Street	ditto

Churcher, Philip Stanley	Accountant, Duncan Bros & Co, Ld	101, Clive Street	ditto
Churchill, J G	Sub-Accountant, Chartered Bank of India, Australia & China	1-1, Clive Street	ditto
Clark, D A S	Engineer, Greaves Cotton & Co, Ld	60, Dharamtala Street	ditto
Clark, John Hutchison	Assistant, Landale & Clark, Ld	11, Clive Street	ditto
Clark, L A	Assistant, Jessop & Co, Ld	93, Clive Street	ditto
Clark, W A	Assistant, McLeod & Co	28, Dalhousie Square	ditto
Clarkeson, John R	Assistant, Lionel Edwards, Ld	D-1, Clive Buildings	ditto
Clelend, D P, BSc, AIC	Assistant, Ivan Jones, Ld	8, Dalhousie Square, East	ditto
Clemens, K R	Assistant, Macmillan & Co, Ld	294, Bowbazar Street	ditto
Clemenson, Bertram Charles	Assistant, C E S C, Ld	Victoria House	ditto
Cliff, Henry	Sales Manager, Walford Transport, Ld	71-73, Park Street	Jew
Cliff, Joseph	Salesman, Walford Transport, Ld	71-73, Park Street	ditto
Cockburn, T S	Sub-Accountant, Chartered Bank of India, Australia & China	1-1, Clive Street	Christian
Coelho, Colin Agair	Assistant, Burmah Shell Co of India, Ld	Hongkong House	ditto
Coelho, Dossu Clifton	Assistant, Alfred, Herbert (India), Ld	13-3, Strand Road	ditto
Coelho, F	Salesman, Dunlop Rubber Co (India), Ld	42, Free School Street	ditto

No.	Names.	Style or calling.	Residence or place of business.	Religion.
	Coelho, Fredrick James	Deputy Secretary, Calcutta Trades Association	34, Dalhousie Square	Christian
	Coelho, P B	Measurer, Bengal Chamber of Commerce	2, Clive Street	ditto
	Coffey, F W	Assistant, Imperial Chemical Industries (India), Ld	18, Strand Road	ditto
	Cohen, Aaron Arakie	Assistant, Anderson Wright & Co	22, Strand Road	Jew
	Cohen, Joe Abraham	Assistant, E D Sassoon & Co, Ld	101, Clive Street	ditto
	Cohen, Sassoon	Salesman, English Electric Co, Ld	D-4, Clive Street	ditto
	Cohen, Shalome Simon Duck	Reader, Caledonian Printing Co, Ld	3, Wellesley Place	ditto
	Coker, C M	Assistant, Macneill & Co	2, Fairlie Place	Christian
	Colby, S R	Assistant, B I S N Co, Ld	8, Strand Road	ditto
	Coldwell, Newcomb Spence	Assistant, James Finlay & Co, Ld	1, Clive Street	ditto
	Coles, B L H	Assistant, Turner, Morrison & Co, Ld	6, Lyons Range	ditto
	Collier, Leonard	Salesman, Marshall Sons & Co (India), Ld	99, Clive Street	ditto
	Collins, P R	Assistant, Geo Henderson & Co, Ld	101-1, Clive Street	ditto
	Collins, Ralph Hubert	Assistant Engineer, *Statesman*, Ld	Statesman House	ditto
	Collins, Warwick Howard	Assistant, South British Insurance Co, Ld	5, Clive Street	ditto
	Colridge, Arthur	Salesman, Whiteaway, Laidlaw & Co, Ld	7, Chowringhee	ditto

Coltart, Ronald Hugh	Assistant, Mackenzie Lyall & Co	5, Mission Row	ditto
Combe, J P	Assistant, Bird & Co	1-1, Clive Street	ditto
Combie, F	Assistant, Calcutta General Printing Co, Ld	300, Bowbazar Street	ditto
Conn, D E	Measurer, Bengal Chamber of Commerce	2, Clive Street	ditto
Connolly, E M T	Chief Draftsman, Mechanical Dept, E B R	3, Koilaghat Street	ditto
Connolly, H S	Assistant, McLeod & Co	28, Dalhousie Square	ditto
Connolly, Joseph Francis	Store-keeper, Greaves Cotton & Co, Ld	60, Dharamtala Street	ditto
Conroy, J H W	Measurer, Bengal Chamber of Commerce	2, Clive Street	ditto
Cook, Collin Norman	Assistant, Army & Navy Stores, Ld	41, Chowringhee	ditto
Cooke, S C	Accountant, Lovelock & Lewes	4, Lyons Range	ditto
Coombe, W J B	Assistant Manager, The Gas Accumulator Co (India), Ld	12, Mission Row	ditto
Cooper, A A	Assistant, Jessop & Co, Ld	93, Clive Street	ditto
Cooper, F W	Engineer, G E C (India), Ld	Magnet House, Central Avenue, South	ditto
Cooper, P A V	Assistant, Andrew Yule & Co, Ld	8, Clive Row	ditto
Cope, J T	Salesman, W & T Avery, Ld	Avery House, Waterloo Street	ditto
Copping, Peter Norman	Assistant, Hamilton & Co, Ld	8, Old Court House Street	ditto
Corbet, Edward Lestrange	Assistant, Burmah Shell Co of India Ld	Hongkong House	ditto

No.	Names,	Style or calling	Residence or place of business.	Religion.
	Corbett, W P	Clerk, C E's Office, E I R	E I R House	Christian
	Corlett, Harold Robert	Salesman, Marshall Sons & Co (India), Ld	99, Clive Street	ditto
	Corner, Alexander MacEwen	Manager, Despatch Deptt, Army & Navy Stores, Ld	41, Chowringhee	ditto
	Cornish, R W	Assistant, Balmer Lawrie & Co, Ld	103, Clive Street	ditto
	Corrin, Adrian Thomas	Assistant, Hoare Miller & Co, Ld	5, Fairlie Place	ditto
	Corrin, R O	Assistant, Balmer, Lawrie & Co, Ld	103, Clive Street	ditto
	Corsie, William	Assistant, Lyall Marshall & Co	4, Fairlie Place	ditto
	Corstorphine, E E	Assistant, Jardine Skinner & Co	4, Clive Row	ditto
	Coryton, P D O	Assistant, Octavius Steel & Co, Ltd	14, Old Court House Street	ditto
	Course, R G	Assistant, Imperial Chemical Industries (India), Ld	18, Strand Road	ditto
	Cousin, Ernest	Assistant, Hoare Miller & Co, Ld	5, Fairlie Place	ditto
	Coutts, C H	Sub-Head, C A O's Office, E I R	E I R House	ditto
	Coventry, Arthur Frederick	Engineer, British Insulated Cables, Ld	2, Waterloo Street	ditto
	Coventry, E D	Assistant, Bird & Co	1-1, Clive Street	ditto
	Cowley, Harold Hendric	Assistant, Macneill & Co	2, Fairlie Place	ditto
	Cowley, James Kewley	Journalist, *Statesman*, Ld	Statesman House	ditto

Cox, Charles	Assistant, Planters' Stores & Agency Co, Ld	11, Clive Street	ditto
Cox, Thomas	Underwriting Clerk, American Foreign Insurance Association	8, Clive Street	ditto
Craig, Robert Gordon	Salesman, I R G P & T W Co, Ld	7, Old Court House Street	ditto
Cramer, F A	Assistant, City Press	9, Strand Road	ditto
Craven, Lawrence Arther	Assistant, Bird & Co	1-1, Clive Street	ditto
Creais, Robert	Assistant, Burmah Shell Co of India, Ld	Hongkong House	ditto
Crews, O J	Assistant, Standard Vacuum Oil Co	6, Church Lane	ditto
Crinall, W O	Measurer, Bengal Chamber of Commerce	2, Clive Street	ditto
Cronan, Lubin Bertram	Assistant, T E Thomson & Co, Ld	9, Esplanade, East	ditto
Cross, W G	Operating & Works Engineer, Calcutta Tramways Co, Ld	7, Church Lane	ditto
Crossby, E J	Assistant Signal Engineer, E I R	E I R House	ditto
Crossby, John	Salesman, Whiteaway, Laidlaw & Co, Ld	7, Chowringhee	ditto
Cuddeford, E J	Assistant, Jardine Skinner & Co	4, Clive Row	ditto
Cullington, H S	Assistant, Andrew Yule & Co, Ld	8, Clive Row	ditto
Cummins, Hubert James	Assistant, Bengal Chamber of Commerce	2, Clive Street	ditto
Cunningham, Alexander More	Assistant, Northern Assurance Co, Ld	7, Hare Street	ditto
Curlender, A	Partner, S Curlender & Co	8, Old Court House Corner	ditto

No.	Names.	Style or calling.	Residence or place of business.	Religion.
	Curlender, D	Partner, S Curlender & Co	8, Old Court House Corner	Christian
	Curlender, Meyer	Partner, S Curlender & Co	8, Old Court House Corner	ditto
	Currie, A H	Assistant, W Haworth & Co	1, Commercial Buildings	ditto
	Curtis, Maurice Seymour	Assistant, Macneill & Co	2, Fairlie Place	ditto
	D			
	D'Costa, L A	Assistant, Bengal Secretariat, Political Department	Writers' Buildings	Christian
	D'Costa, P	Measurer, Bengal Chamber of Commerce	2, Clive Street	ditto
	D'Cruz, A E	Measurer, Bengal Chamber of Commerce	2, Clive Street	ditto
	D'Cruz, D F	Assistant, Turner, Morrison & Co, Ld	6, Lyons Range	ditto
	D'Cruz, Ernest Berghman	Assistant Accountant, Port Commissioners' Office	Strand Road	ditto
	D'Cruz, William Ernest	Assistant, Duncan Brothers & Co, Ld	101, Clive Street	ditto
	D'Cruze, A	Assistant Salesman, Marshall Sons & Co (India), Ld	99, Clive Street	ditto
	D'Cruze, D B	Assistant, A G's Office, Bengal	Treasury Buildings	ditto
	D'Cruze, D R	Clerk, Jardine Skinner & Co	4, Clive Row	ditto
	D'Moirah, S J	Measurer, Bengal Chamber of Commerce	2, Clive Street	ditto
	D'Paiva, Joseph Chalmer	Assistant, Hoare Miller & Co, Ld	5, Fairlie Place	ditto

D'Rozario, D	Reader, Government of India Press	8, Hastings Street	ditto
D'Rozario, Joseph	Assistant, Bengal Chamber of Commerce	2, Clive Street	ditto
D'Santos, Edward	Assistant, Hoare Miller & Co, Ld	5, Fairlie Place	ditto
D'Silva, C J	Measurer, Bengal Chamber of Commerce	2, Clive Street	ditto
D'Silva, H C J	Measurer, Bengal Chamber of Commerce	2, Clive Street	ditto
D'Souza, A G, BA	Clerk, D A G P & T Office	7, Koilaghat Street	ditto
D'Souza, B W	Chief Clerk, Baptist Mission Press	41, Lower Circular Road	ditto
D'Souza, C	Assistant, Jessop & Co, Ld	93, Clive Street	ditto
D'Souza, C A	Measurer, Bengal Chamber of Commerce	2, Clive Street	ditto
D'Souza. D	Assistant, Hall & Anderson, Ld	31, Chowringhee	ditto
D'Souza, Francis D	Clerk, Prudential Assurance Co, Ld	Clive Buildings	ditto
D'Souza, G W	Measurer, Bengal Chamber of Commerce	2, Clive Street	ditto
D'Souza, J A	Measurer, Bengal Chamber of Commerce	2, Clive Street	ditto
D'Souza, R B	Assistant, Thacker Spink & Co (1933), Ld	3, Esplanade, East	ditto
D'Souza, Remigus Francis	Clerk, Prudential Assurance Co, Ld	Clive Buildings	ditto
DaCosta, Edwin William	Head Clerk, Eagle Star and British Dominions Insurance Co, Ld	21, Strand Road	ditto

No.	Names.	Style or calling	Residence or place of business.	Religion.
	Dakers, James Tullis	Assistant, Andrew Yule & Co, Ld	8, Clive Row	Christian
	Dalling, Robert	Assistant Geo Beaver & Co	87-A, Clive Street	ditto
	Dalmahoy, A E	Assistant, McLeod & Co	28, Dalhousie Square	ditto
	Daniell, A H	Assistant, J O'Hara Murray & Co	100, Clive Street	ditto
	Daniell, Hector Rupert Horatio, BA, BT	Master, Elias Meyer Free School and Talmud Torah	50, Bowbazar Street	ditto
	Daniell, S	Stenographer, C M E's Office, E I R	E I R House	ditto
	Daniels, A	Mech. Supervisor, Calcutta Improvement Trust	5, Clive Street	ditto
	Darbyshire, H M	Assistant, Octavius, Steel & Co, Ld	14, Old Court House Street	ditto
	DaSilva, Richard Herbert	Journalist, *Statesman*, Ld	Statesman House	ditto
	Davey, G H	Measurer, Bengal Chamber of Commerce	2, Clive Street	ditto
	David, O	Assistant, Mackinnon, Mackenzie & Co	8, Strand Road	ditto
	Davidson, J E	Assistant, Balmer, Lawrie & Co, Ld	103, Clive Street	ditto
	Davidson, L A	Assistant, Imperial Bank of India	Strand Road	ditto
	Davidson, Matthew Denholm	Assistant, A & J Main & Co, Ld	10, Clive Street	ditto
	Davies, Stanley Horace	Assistant, Duncan Brothers & Co, Ld	101, Clive Street	ditto
	Davies, William Owen	Engineer, W & T Avery, Ld	11, Crooked Lane	ditto

Davis, G F	Assistant, Lipton, Ld	9, Weston Street	ditto
Davis, Ralph S	Accountant, Ludlow Jute Co, Ld	7, Royal Exchange Place	ditto
Dawson, C J	Assistant, Andrew Yule & Co, Ld	8, Clive Row	ditto
Dawson, Donald Leslie	Assistant, W T Henley's Telegraph Works Co, Ld	Old Court House Corner	ditto
Dean, M R	Assistant Accountant, Lloyds Bank, Ld	101-1, Clive Street	ditto
Dearden, R A	Assistant, Associated British Machine Tool Makers, Ld	6, Old Post Office Street	ditto
Deacon, H G	Assistant, Andrew Yule & Co, Ld	8, Clive Street	ditto
DeCourcey, K S	Salesman, Greaves Cotton & Co, Ld	60, Dharamtala Street	ditto
Delacour, J H	Asstt Accountant, P & O Banking Corporation, Ltd	1, Fairlie Place	ditto
Delaplaine, A C	Assistant, Standard Vacuum Oil Co	6, Church Lane	ditto
DeLang, Edward	Assistant, Craven Bros (Manchester), Ld	19-C, British Indian Street	ditto
DeLeemans, E N	Measurer, Bengal Chamber of Commerce	2, Clive Street	ditto
Dennis, W H	Assistant Accountant, Lloyds Bank, Ld	101-1, Clive Street	ditto
Derosaire, E R G	Measurer, Bengal Chamber of Commerce	2, Clive Street	ditto
DeSanges Thos R	Assistant Burn & Co, Ld	12, Mission Row	ditto
DeSouza, Gabriel	Assistant, Bird & Co	1-1, Clive Street	ditto

No.	Names.	Style or calling.	Residence or place of business.	Religion.
	Dessa, Albert	Assistant, Taylor's Gramophone Saloon	15-4, Chowringhee	Christian
	Devereux, C A	Assistant, I G N & R Co, Ltd	4, Fairlie Place	ditto
	Devereux, C H	Assistant, Jessop & Co, Ltd	93, Clive Street	ditto
	Devereux, Lawrence Arthur	Architect, Talbot & Co	Tower House	ditto
	Devery, Bernard John	Assistant, Hoare Miller & Co, Ld	5, Fairlie Place	ditto
	Devine, F C	Sub-Accountant, Lloyds Bank, Ld	101-1, Clive Street	ditto
	Diamond, W H	Assistant, Jessop & Co, Ld	93, Clive Street	ditto
	Dias, G P	Assistant, Office of the I-G of Police	Writers' Buildings	ditto
	Diboll, R W G	Acting Manager, Sutton & Sons, Ld	35, Park Mansions	ditto
	Dick, W H A	Assistant, Lloyds Bank, Ld	101-1, Clive Street	ditto
	Dickins, L Clifford	Engineer, Paterson Engineering Co (India), Ld	2, Dalhousie Square	ditto
	Dickson, A R	Assistant, A M Mair & Co	6, Royal Exchange Place	ditto
	Dickson, J W	Assistant, Mackinnon Mackenzie & Co	16, Strand Road	ditto
	Dickson, Robert Fraser	Assistant, Ranken & Co, Ld	4, Old Court House Street	ditto
	Dowley, D A	Assistant Inspector (Mains), Central District, C E S C, Ld	Victoria House	ditto
	Dougal, W T	Sub-Accountant, Mercantile Bank of India, Ld	8, Clive Street	ditto

Douglas, D I	Assistant, H J Foster & Co, Ld	Sassoon House	ditto
Doyne, E D	Assistant, Kilburn & Co	4, Fairlie Place	ditto
Draper, Maurice, BSC (Lond.)	Assistant Master, La Martiniere	11, Loudon Street	ditto
Drew, H	Vict. Supdt, B I S N Co, Ld	16, Strand Road	ditto
Du Casse, A J	Assistant, Macmillan & Co, Ld	294, Bowbazar Street	ditto
Duckworth, G F, MA	S A S Clerk, D A G P & T Office	7, Koilaghat Street	ditto
Dudley, H	Assistant, G E C (India), Ld	Magnet House, Chittaranjan Avenue, South.	ditto
Duguid, Robert Hutton	Accountant, Duncan Brothers & Co, Ld	101, Clive Street	ditto
Dunbar, James	Accountant, *Statesman*, Ld	Statesman House	ditto
Duncan, C G	Assistant, Bombay Co, Ld	19, British Indian Street	ditto
Duncan, P C	Assistant, Geo Henderson & Co, Ld	101-1, Clive Street	ditto
Duncan, P M	Assistant, Geo Henderson & Co, Ld	101-1, Clive Street	ditto
Dunlop, W D W	Assistant Accountant, National Bank of India, Ld	104, Clive Street	ditto
Dunsford, Edward Henry	Assistant Engineer, Construction, C E S C, Ld	Victoria House	ditto
Dutton, Michael Lawrence	Examiner of Accounts, I T Office	3, Government Place, West	ditto
Dyer, P J	Assistant, Balmer, Lawrie & Co, Ld	103, Clive Street	ditto
Dyer, W H	Sub-Accountant, Lloyds Bank, Ld	101-1, Clive Street	ditto

No.	Names.	Style or calling.	Residence or place of business.	Religion.
	Dyer, Walter Lawrence Edmund	Assistant, Martin and Harris, Ld	17, Prinsep Street	Christian
	E			
	Eady, B C	Assistant, Lovelock & Lewes	4, Lyons Range	Christian
	Earl, Charles Clement	Assistant, Cox and Kings (Agents), Ld	5, Bankshall Street	ditto
	Earshman, George Purves	Assistant, Ranken & Co, Ld	4, Old Court House Street	ditto
	Easson, J W	Assistant, Gillanders Arbuthnot & Co	8, Clive Street	ditto
	Eastment, T	Assistant Accountant, Port Commissioners' Office	Strand Road	ditto
	Eburne, S T	Engineer, G E C (India), Ld	Magnet House, Chittaranjan Avenue, South.	ditto
	Echlin, Cyril M	House Manager, Humayan Properties, Ld	1, Humayan Place	ditto
	Edey, A R	Stock Broker, Stewart & Co	8, Clive Street	ditto
	Edge, C S	Measurer, Bengal Chamber of Commerce	2, Clive Street	ditto
	Edrich, W T	Assistant, Jardine Skinner & Co	4, Clive Row	ditto
	Edwards, Edward	Salesman, Henry Maddison, Ld	Mercantile Buildings	ditto
	Edwin, Alfred Samuel, BA	Assistant, Reserve Bank of India	8, Council House Street	ditto
	Elder, J K	Assistant, Geo Henderson & Co, Ld	101-1, Clive Street	ditto
	Elias, I	Foreman, Testing Department, C E	Victoria House	Jew

Elkin, William James	Assistant, Marshall Sons & Co (India), Ld	99, Clive Street	ditto
Ellicott, Noel Ivor	Retail Manager, Kodak, Limited	17, Park Street	ditto
Elliot, Edmond Waren	Assistant, Kilburn & Co	4, Fairlie Place	ditto
Elliott, Reginald Sutton	Assistant, Employer's Liability Assurance, Corpn, Ld	9, Clive Street	ditto
Ellis, J	Assistant, Balmer, Lawrie & Co, Ld	103, Clive Street	ditto
Ellis, Leslie Seymour	Assistant, Macneill & Co	2, Fairlie Place	ditto
Elloy, James F G, BA	Assistant, Education Department, Bengal Secretariat	Writers' Buildings	ditto
Elloy, S A J	Assistant, Jessop & Co, Ld	93, Clive Street	ditto
Engineer, H D	Assistant, Grahams Trading Co (India), Ld	6, Lyons Range	ditto
English, I J	Assistant, Standard Vacuum Oil Co	6, Church Lane	ditto
Ephraim, W	Press Reader, Baptist Mission Press	41, Lower Circular Road	ditto
Esplen, James Leslie	Assistant, Normans, Ross & Co	3, Clive Street	ditto
Essery, A E	Salesman, J Boseck & Co, Ld	16-5, Chowringhee	ditto
Evans, E J	Assistant, Guest, Keen, Williams, Ld	7, Council House Street	ditto
Evans, Percival Cadogan	Manager, I R G P & T W Co, Ld	7, Old Court House Street	ditto
Evenette, Ernest William	Assistant, Gillanders Arbuthnot & Co	8, Clive Street	ditto
Everingham, A A	Assistant, I G N & Ry Co, Ld	Armenian Ghat	ditto

No.	Names.	Style or calling.	Residence or place of business.	Religion.
	Evrall, Roger	Salesman, Alfred Herbert (India), Ld	13-3, Strand Road	Christian
	Ewing, F O	Assistant, I G N & Ry Co, Ld	4, Fairlie Place	ditto
	Ezekiel, D	Partner, Ezekiel & Co	13, Chowringhee Lane	Jew
	Ezekiel, E	Partner, Ezekiel & Co	13, Chowringhee Lane	ditto
	Ezekiel, J	Partner, Ezekiel & Co	13, Chowringhee Lane	ditto
	Ezra, Ezekiel	Assistant, Army & Navy Stores, Ld	41, Chowringhee	ditto
	Ezra, M S	Superintendent, Central Registry, E B R	3, Kaylaghat Street	ditto
	Ezra, Ralph	Assistant, Bird & Co	1-1, Clive Street	Christian
	F			
	Falloon, V R	Assistant, McGregor & Balfour, Ld	11, Clive Street	Christian
	Farmer, Francis Darell	Assistant, James Finlay & Co, Ld	1, Clive Street	ditto
	Farrell, John Stanley	Assistant, Macneill & Co	2, Fairlie Place	ditto
	Farrell, T A	Assistant, Shaw, Wallace & Co	4, Bankshall Street	ditto
	Farrell, T M	Audit Inspector, Port Commissioners' Office	Strand Road	ditto
	Farrer, C E	Assistant, Standard Vacuum Oil Co	6, Church Lane	ditto
	Farrow, Harold Arthur Lewis	Assistant, F W Heilgers & Co	1-1, Clive Street	ditto

Faulkner, John Claude	Assistant, Begg, Dunlop & Co, Ld	2, Hare Street	ditto
Fawcett, James Edward	Assistant, F W Heilgers & Co	1-1, Clive Street	ditto
Fellinger, Eugene Gerald	Artist, *Statesman*, Ld	Statesman House	ditto
Fenwick, J H	Sub-Accountant, Chartered Bank of India, Australia & China	1-1, Clive Street	ditto
Fenwick, W F	Works Manager, W & T Avery, Ld	11, Crooked Lane	ditto
Ferguson, J	Assistant, Jessop & Co, Ld	93, Clive Street	ditto
Fernandes, Mick	Accountant, George Newnes Book Co (India), Ld	10, Clive Row	ditto
Fernandez, C P	Measurer, Bengal Chamber of Commerce	2, Clive Street	ditto
Fernandez, Joacquin Ludoireo	Clerk, Prudential Assurance Co, Ld	Clive Buildings	ditto
Fernandez, Reginald	Clerk, Ralli Bros, Ld	16, Hare Street	ditto
Ferris, Maurice	Assistant, E D Sassoon & Co, Ld	101, Clive Street	Jew
Ferron, Arthur Richard	Salesman, Army & Navy Stores, Ld	41, Chowringhee	Christian
Fettes, W J A	Assistant, The Central Agency, Ld	2, Old Court House Corner	ditto
Fewkes, Henry Gordon	Assistant, J B Norton & Sons, Ld	Norton Buildings	ditto
Field, C A	Assistant, J Boseck & Co, Ld	17-3, Chowringhee	ditto
Findlay, R W	Assistant, I G N & Ry Co, Ld	4, Fairlie Place	ditto
Fink, L T MacRitchie, BCom (Lond)	Examiner of Accounts, Income-Tax Office	6, Esplanade, East	ditto

No.	Names.	Style or calling.	Residence or place of business.	Religion.
	Fisher, E C	Assistant, Turner, Morrison & Co, Ld	6, Lyons Range	Christian
	Fitzau, Ralph	Assistant, Max Staub, Ld	10, Clive Row	ditto
	Fitzgerald, G D	Assistant, Gladstone, Wyllie & Co	4, Fairlie Place	ditto
	Flanigan, Charles Andrew	Assistant, Hamilton & Co, Ld	8, Old Court House Street	ditto
	Fleming, L H	Assistant, Thomas Duff & Co, Ld	3, Clive Row	ditto
	Fleming, Murray	Assistant, Moran & Co, Ld	4, Lyons Range	ditto
	Fletcher, Geoffrey Cyril	Stock Broker, Stewart & Co	8, Clive Street	ditto
	Fletcher, Wy Cliffe	Assistant, Pigott Chapman & Co	6, Lyons Range	ditto
	Fleury, G W	Engineer, Calcutta Mint	47, Strand Road	ditto
	Fleury, M	Assistant, Standard Vacuum Oil Co	6, Church Lane	ditto
	Flowerday, Lawrence	Assistant, Whiteaway Laidlaw & Co, Ld	7, Chowringhee	ditto
	Foote, Arthur George Frank	Assistant, Army and Navy Stores, Ld	41, Chowringhee	ditto
	Foolit, R L C, B A (Cantab)	Assistant, Burmah Shell Co of India, Ld	Hongkong House	ditto
	Forbes, A A	Assistant, Jardine Skinner & Co	4, Clive Row	ditto
	Forbes, Kenneth Herberts	Assistant, Burmah Shell Co of India, Ld	Hongkong House	ditto
	Forbes, W K	Assistant, Price, Waterhouse, Peat & Co	B-4, Clive Buildings	ditto

Ford, E H	Assistant, Balmer, Lawrie & Co, Ld	103, Clive Street	ditto
Ford, Guy Harold	Salesman, Texas Co (India), Ld	11, Esplanade, East	ditto
Forster, Andrew Hine	Assistant, Barry & Co	2, Fairlie Place	ditto
Fox, A E	Assistant, McLeod & Co	28, Dalhousie Square	ditto
Fox, D	Assistant, Manton & Co	13, Old Court House Street	ditto
Fox, D R	Measurer, Bengal Chamber of Commerce	2, Clive Street	ditto
Francis, A W	Claims Inspector, E B R	3, Kaylaghat Street	ditto
Francis, C N	Assistant, Turner, Morrison & Co, Ld	6, Lyons Range	ditto
Francis, E	Assistant, I G N & Ry Co, Ld	Nimtala	ditto
Francis, J	Assistant, Turner, Morrison & Co, Ld	6, Lyons Range	ditto
Francis, Vernon Clifford	Master, Elias Meyer Free School and Talmud Torah	50, Bowbazar Street	ditto
Frankum, G C	Engineer, Calcutta Mint	47, Strand Road	ditto
Freestone, William	Assistant, C C Wakefield & Co, Ld	7, Royal Exchange Place	ditto
French, Bryan Morley	Assistant, James Finlay & Co, Ld	1, Clive Street	ditto
French, Collin Leslie	Assistant, F W Heilgers & Co	1-1, Clive Street	ditto
Frowd, L K	Assistant, Hall & Anderson, Ld	31, Chowringhee	ditto
Frutwein, G E	Assistant, Place Siddon & Gough	6, Lyons Range	ditto

No.	Names.	Style or calling.	Residence or place of business.	Religion.
	Fuller, Gordon Wallace	Assistant, Nestle & Anglo-Swiss Condensed Milk (Export) Co, Ld	9A, Clive Street	Christian
	Furlonger, C A M	Assistant, Standard Vacuum Oil Co	6, Church Lane	ditto
	Furns, John Smith	Assistant, Moran & Co, Ld	4, Lyons Range	ditto
	Fyfe, J H	Assistant, Mackinnon Mackenzie & Co	16, Strand Road	ditto
	Fyfe, J M	Assistant, Balmer Lawrie & Co, Ld	103, Clive Street	ditto
	G			
	Gade, R V	Assistant, Heatly & Gresham, Ld	6, Waterloo Street	Christian
	Gainsford, A T	Assistant, Mackinnon, Mackenzie & Co	16, Strand Road	ditto
	Gale, V F	Assistant, Balmer, Lawrie & Co, Ld	103, Clive Street	ditto
	Galloway, Albert Henry	Assistant Manager, Corn Products Co (India), Ld	4, Lyons Range	ditto
	Galloway, A H	Assistant, Octavius Steel & Co, Ld	14, Old Court House Street	ditto
	Garate, Edmound Ernest	Assistant, Army & Navy Stores, Ld	41, Chowringhee	ditto
	Garreau, Ronald	Boiler Inspector	40-1A, Free School Street	ditto
	Garrison, Edward	Principal, City Telegraph & Commercial College	121-B, Bowbazar Street	ditto
	Gellatly, A K	Assistant, Turner, Morrison & Co, Ld	6, Lyons Range	ditto
	Gellatly, K M	Assistant, Turner, Morrison & Co, Ld	6, Lyons Range	ditto

George, B	Storekeeper, McGregor and Balfour, Ld	11, Clive Street	ditto
George, T J	Assistant, Bombay Co, Ld	19, British Indian Street	ditto
Gerard, E L	Assistant, Balmer, Lawrie & Co, Ld	103, Clive Street	ditto
Gidley, A G	Assistant, Burn & Co, Ld	12, Mission Row	ditto
Gilbert, James Anderson	Assistant, Cox and Kings (Agents), Ld	5, Bankshall Street	ditto
Giles, D H	Assistant, Alliance Insurance Co	2, Hare Street	ditto
Gill, F R	Measurer, Bengal Chamber of Commerce	2, Clive Street	ditto
Gill, H S	Assistant, Lovelock & Lewes	4, Lyons Range	ditto
Gillespie, E F	Storekeeper, Jewell Export Filter, Co	10, Clive Street	ditto
Gilmour, Lockart	Engineer, Chloride Electrical Storage Co, Ld	4, Lyons Range	ditto
Gilson, C	Assistant, Babcock, Wilcox, Ld	4, Bankshall Street	ditto
Ginzler, A T F	Assistant, Heatly & Gresham, Ld	6, Waterloo Street	ditto
Ginzler, J R	Assistant, Heatly & Gresham, Ld	6, Waterloo Street	ditto
Glasfurd, Gerald Fenton	Assistant, J & R Hutchison, Ld	29, Waterloo Street	ditto
Glasfurd, Harold Oscar	Head Master, St Paul's Higher Grade Mission School	13, Scott's Lane	ditto
Glenn, U	Assistant, Price, Waterhouse, Peat & Co	B-4, Clive Buildings	ditto

No.	Names.	Style or calling.	Residence or place of business.	Religion.
	Glover, Alfred Edwin	Assistant, Alfred Herbert (India), Ld	13-3, Strand Road	Christian
	Glover, Danford	Assistant, Worthington, Simpson, Ld	10, Clive Street	ditto
	Glynn, N C	Measurer, Bengal Chamber of Commerce	2, Clive Street	ditto
	Godwin, Harold James	Assistant, Thomas, Cook & Son, Ld	4, Dalhousie Square	ditto
	Gomes, Joseph Aloysius	Assistant, Army & Navy Stores, Ld	41, Chowringhee	ditto
	Gomes, J S	Assistant, Hall & Anderson, Ld	31, Chowringhee	ditto
	Gomez, B L	Assistant, Jessop & Co, Ld	93, Clive Street	ditto
	Gomez, C O	Assistant, Balmer, Lawrie & Co, Ld	103, Clive Street	ditto
	Gomez, John Henry	Assistant Engineer, *Statesman*, Ld	Statesman House	ditto
	Gomme, D E	Assistant, Octavius Steel & Co, Ld	14, Old Court House Street	ditto
	Gonsalves, J R	Assistant, Turner, Morrison & Co, Ld	6, Lyons Range	ditto
	Gonsalves, S R	Stenographer, Mechanical Department, E B R	3, Koilaghat Street	ditto
	Goodman, E L	Assistant, McLeod & Co	28, Dalhousie Square	ditto
	Goodman, George Joseph	Assistant, Anderson, Wright & Co	22, Strand Road	ditto

Gordon, J	Engineer, Mackintosh, Burn, Ld	8, Clive Street	ditto
Gosling, E B	Assistant, Jessop & Co, Ld	93, Clive Street	ditto
Goss, A	Works Manager, A Milton & Co, Ld	156, Dharamtala Street	ditto
Gough, Harry	Assistant, Cox & Kings (Agents), Ld	5, Bankshall Street	ditto
Gould, A	Head Assistant, Sun Life of Canada	12, Dalhousie Square, East	ditto
Gourlay, R A	Assistant, Jardine, Skinner & Co	4, Clive Row	ditto
Graham, Joseph Faulds	Assistant, British Insulated Cables, Ld	2, Waterloo Street	ditto
Graham, Osmond Joseph	Reader, Caledonian Printing Co, Ld	3, Wellesley Place	ditto
Grange, Aubrey Cecil Malcolm	Salesman, Kalamazoo (Sales), Ld	2 and 3, Clive Row	ditto
Granville, Harry Norman	Assistant, New Zealand Insurance Co, Ld	26, Dalhousie Square	ditto
Graves, A J	Assistant, Allen and Hanburys, Ld	C-3, Clive Buildings	ditto
Greaves, Jack	Salesman, Walford Transport, Ld	71-73, Park Street	ditto
Greene, W R	Assistant, Jardine, Skinner & Co	4, Clive Row	ditto
Gregory, G E	Assistant, R K O Radio Pictures, Ld	98E, Central Avenue, South	ditto
Gregory, George William	Assistant, Hoare Miller & Co, Ld	5, Fairlie Place	ditto

No.	Names.	Style or calling.	Residence or place of business.	Religion.
	Gregory, John Simon	Assistant, Talbot & Co	Tower House	Christian
	Gregson, H R	Engineer, Chloride Electric Storage Co, Ld	4, Lyons Range	ditto
	Grenon, D	Assistant, City Press	9, Strand Road	ditto
	Grieve, A C	Assistant, Jardine, Skinner & Co	4, Clive Row	ditto
	Griffin, G E	Salesman, Marshall Sons & Co (India), Ld	99, Clive Street	ditto
	Griffiths, G C	Assistant, Balmer, Lawrie & Co, Ld	103, Clive Street	ditto
	Grimpel, B H	Assistant, Cox & Kings (Agents), Ld	5, Bankshall Street	ditto
	Grueber, P K	Head Clerk, Calcutta Tramways Co, Ld	7, Church Lane	ditto
	Gueizelar, Oliver Osmond	Chief Contract Clerk, Bengal Telephone Corporation, Ld	8, Hare Street	ditto
	Gundry, George	Salesman, Harnack & Co	10, Old Court House Street	ditto
	Guynan, Herbert William	Assistant, T E Thomson & Co, Ld	9, Esplanade, East	ditto
	H			
	Hadlow, B D	Assistant, Turner, Morrison & Co, Ld	6, Lyons Range	ditto
	Hall, S G	Sub-Accountant, Lloyds Bank, Ld	101-1, Clive Street	ditto

Hall, V G	Assistant, Thorne's, Ld	13, Ezra Street	ditto
Hall, W R	Assistant, Standard Vacuum Oil, Co	6, Church Lane	ditto
Halpin, J E	Office Superintendent, Port Commissioners' Office	Strand Road	ditto
Hamilton, John	Boiler Inspector	40-1A, Free School Street	ditto
Hamilton, Robert Mackay	Assistant, A & G Main & Co, Ld	10, Clive Street	ditto
Hammond, A F	Assistant, Lloyds Bank, Ld	101-1, Clive Street	ditto
Hanley, Patrick William	Assistant, Cooke and Kelvey	20, Old Court House Street	ditto
Hanlon, J V	Assistant, Standard Vacuum Oil, Co	6, Church Lane	ditto
Hannah, Donald Victor	Boiler Inspector	40-1A, Free School Street	ditto
Hannah, M R	Sub-Accountant, Chartered Bank of India, Australia & China	1-1, Clive Street	ditto
Hannah, R L	Assistant, Calcutta Tramways Co, Ld	7, Church Lane	ditto
Hanson, H N	Measurer, Bengal Chamber of Commerce	2, Clive Street	ditto
Hanson, Oliver	Assistant, Samuel Fitze & Co, Ld	26, Chowringhee	ditto
Hardaker, John	Journalist, *Statesman*, Ld	Statesman House	ditto
Harding, B A	Assistant, Breakwell & Co	44, Free School Street	ditto

No	Names.	Style or calling	Residence or place of business.	Religion.
	Hardinge, Roderic Melwood	Assistant, F W Heilgers & Co	1-1, Clive Street	Christian
	Hardless, Cedric	Assistant, Ralli Bros, Ld	16, Hare Street	ditto
	Hardless, W	Assistant, Hall & Anderson, Ld	31, Chowringhee	ditto
	Hardman, Gerald Moss	Engineer, English Electric Co, Ld	D-4, Clive Buildings	ditto
	Harker, Henry H, B.A.(Oxon)	Assistant Master, La Martiniere	11, Loudon Street	ditto
	Harper, E	Superintendent of Stores, Sutton & Sons, Ld	35, Park Mansions	ditto
	Harrington, William Maurice	Sub-Editor, " Star of India "	3, Wellesley Place	ditto
	Harris, Albert Victor	Assistant, Hamilton & Co, Ld	8, Old Court House Street	ditto
	Harris, Herbert Stanley	Assistant, British Insulated Cables, Ld	2, Waterloo Street	ditto
	Harris, K F L	Assistant, F W Heilgers & Co	1-1, Clive Street	ditto
	Harrison, Frank	Assistant Manager, Cox & Kings (Agents), Ld	5, Bankshall Street	ditto
	Harrison, S G	Assistant, Ocean Accident & Guarantee Corporation, Ld	32-1, Dalhousie Square, South	ditto
	Harvey, A	Assistant, Lloyds Bank, Ld	101-1, Clive Street	ditto
	Haslam, P	Assistant, Hall & Anderson , Ld	31, Chowringhee	ditto
	Hastings, Andrew S	Engineer, Mackintosh Burn, Ld	8, Clive Street	ditto

Hawkings, R J	Assistant, G E C (India), Ld	Magnet House, Chittaranjan Avenue (South).	ditto
Hawkins, R E	Assistant, Gladstone Wyllie & Co	4, Fairlie Place	ditto
Hay, Edmond Gordon	Assistant, Burmah Shell Co of India, Ld	Hongkong House	ditto
Hay, William	Engineer, Mackintosh Burn, Ld	8, Clive Street	ditto
Hayeck, John Francis	Assistant, Llewellyn & Co	9-1, Waterloo Street	ditto
Hayden, H K	Assistant, Hall & Anderson, Ld	31, Chowringhee	ditto
Hayman, R D	Assistant, Mackinnon Mackenzie & Co	16, Strand Road	ditto
Head, George	Photographer, *Statesman*, Ld	Statesman House	ditto
Heathman, G B H	Assistant Accountant, Lloyds Bank, Ld	101-1, Clive Street	ditto
Hedley, Brian Ernest	Sales Engineer, Standard Telephones & Cables, Ld	4, Esplanade, East	ditto
Heelis, Richard	Assistant, Andrew, Yule & Co, Ld	8, Clive Row	ditto
Hefferan, Albert Edward	Assistant, Ralli Bros, Ld	16, Hare Street	ditto
Hemming, Charles Capper	Assistant, Alliance Assurance Co, Ld	2, Hare Street	ditto
Hempson, John Spencer	Assistant, Burmah Shell Co of India, Ld	Hongkong House	ditto
Henshaw, David	Assistant, Walter Bushnell, Ld	21, Old Court House Street	ditto
Henderson, D R	Assistant, Remington Rand Inc	3, Council House Street	ditto

No.	Names.	Style or calling.	Residence or place of business.	Religion.
	Henderson, Donald Victor	Assistant, The Indo Burma Petroleum Co, Ld	8, Clive Street	Christian
	Hendry, G V	Assistant, Grahams Trading Co (India), Ld	6, Lyons Range	ditto
	Henry, J	Godown Superintendent, Imperial Chemical Industries (India), Ld	18, Strand Road	ditto
	Henwood, George Pearson	Assistant, Ralli Bros, Ld	16, Hare Street	ditto
	Herbert, J F	Assistant, Kilburn & Co	4, Fairlie Place	ditto
	Hetherington, Henry Alfred	Assistant Engineer, Scott & Saxby, Ld	19, British Indian Street	ditto
	Heysham, George Clifford Berkeley	Assistant, Ralli Bros, Ld	16, Hare Street	ditto
	Hezmalhatch, Alfred	Assistant, Andrew, Yule & Co, Ld	8, Clive Row	ditto
	Hickman, T	Assistant, Kilburn & Co	4 Fairlie Place	ditto
	Hickman, W	Inspector, C E S C, Ld	Victoria House	ditto
	Hickmott, Reginald Ernest Joseph	Assistant, Hoare Miller & Co, Ld	5, Fairlie Place	ditto
	High, J W	Assistant, Jessop & Co, Ld	93, Clive Street	ditto
	Hill, C Rowland	Proprietor, General Export Co	55-58, Ezra Street	ditto
	Hill, F W	Assistant, Andrew, Yule & Co, Ld	8, Clive Row	ditto

Hillary, A	Lino Operator, Govt. of India Press	8, Hastings Street	ditto	
Hilliard, W A	Assistant, McGregor & Balfour, Ld	11, Clive Street	ditto	
Hillman, G K	Assistant, Standard Vacuum Oil, Co	6, Church Lane	ditto	
Hinton, W W	Assistant, Jardine, Skinner & Co	4, Clive Row	ditto	
Hippolite, D A	Measurer, Bengal Chamber of Commerce	2, Clive Street	ditto	
Hippolite, Eric James	Assistant, Blackwood, Bryson & Co, Ld	2, Mangoe Lane	ditto	
Hipsey, Alfred William Leslie	Accountant, Air Conditioning Corporation, Ld	4, Dalhousie Square	ditto	
Hirtzel, Michael Arthur Frederick	Assistant, Macneill & Co	2, Fairlie Place	ditto	
Hobson, Charles William	Assistant, Bengal Chamber of Commerce	2, Clive Street	ditto	
Hockley, B	Assistant, Calcutta Claims Bureau	26, Dalhousie Square	ditto	
Hockley, C	Assistant, McLeod & Co	28, Dalhousie Square	ditto	
Hodgen, W K	Assistant, I G N & Ry, Co, Ld	Nimtollah	ditto	
Hodges, Douglas Arthur	Assistant, Bell's Asbestos & Engineering (India), Ld	10, Clive Street	ditto	
Hodges, Ernest William	Assistant, Army & Navy Stores, Ld	41, Chowringhee	ditto	
Hodgkinson, H	Assistant, Jessop & Co, Ld	93, Clive Street	ditto	
Hogg, W	Assistant, Babcock, Wilcox, Ld	4, Bankshall Street	ditto	
Hoggan, D C J	Draftsman, C M E's Office, E I R	E I R House	ditto	

No.	Names.	Style or calling	Residence or place of business.	Religion.
	Hollands, John A	Assistant, Lionel, Edwards, Ld	D-1, Clive Buildings	Christian
	Hollis, A W	Assistant, Birla Brothers, Ld	8, Royal Exchange Place	ditto
	Holmes, A C	Sub-Accountant, Lloyds Bank, Ld	101-1, Clive Street	ditto
	Holmes, E C T	Assistant, Balmer, Lawrie & Co, Ld	103, Clive Street	ditto
	Hood, John	Assistant, Roberts, McLean & Co, Ld	101, Clive Street	ditto
	Hook, Gerald Joseph	Assistant, Anderson, Wright & Co	22, Strand Road	ditto
	Hook, Henry Milton	Journalist, Statesman Ld	Statesman House	ditto
	Hoover, Robert	Assistant, Texas Co (India), Ld	11, Esplanade, East	ditto
	Hopkins, C A	Assistant, Ocean, Accident & Guarantee Corpn, Ld	32-1, Dalhousie Square, South	ditto
	Hopkins, N D	Assistant, Brooke Bond (India), Ld	2, Metcalfe Street	ditto
	Hopkins, Trevor Henry	Assistant, Walter, Bushnell, Ld	21, Old Court House Street	ditto
	Horn, Loftus Percy	Assistant, Bird & Co	1-1, Clive Street	ditto
	Hornsey, Fredrick	Partner, The India Oil, Co	Stephen House	ditto
	Houghton, D A	Assistant, Shaw, Wallace & Co	4, Bankshall Street	ditto
	Howard, H	Assistant, Price, Waterhouse, Peat & Co	B4, Clive Buildings	ditto
	Howatson, M H Kirkwood	Assistant, Burmah Shell Co of India, Ld	Hongkong House	ditto
	Howe, William Fraser	Assistant, Bird & Co	1-1, Clive Street	ditto

Hoyle, C G	Engineer, Calcutta Mint	47, Stran l Road	ditto	
Huck, John	Assistant, Lyall, Marshall & Co	4, Fairlie Place	ditto	
Hugh, Francis Spencer	Assistant, Samuel, Fitz & Co, Ld	26, Chowringhee	ditto	
Hudson, John	Assistant, Butterworth & Co (India), Ld	Chowringhee Square	ditto	
Hugh, Oswald Sheanc-Smith	Assistant, Martin & Co	12, Mission Row	ditto	
Hughes, R A	Journalist, *Statesman*, Ld	Statesman House	ditto	
Hume, A H	Assistant, Turner, Morrison & Co, Ld	6, Lyons Range	ditto	
Humfrey, C M	Assistant, Associated Electrical Industries (India), Ld	A-3, Clive Buildings	ditto	
Humphrey, W R	Dy Superintendent, I G N & Ry, Co, Ld	4, Fairlie Place	ditto	
Humphrys, Arthur Sankey	Assistant, *Statesman*, Ld	Statesman House	ditto	
Hunt, D	Assistant, Gladstone, Wyllie & Co	4, Fairlie Place	ditto	
Hunt, L E	Assistant, Turner, Morrison & Co, Ld	6, Lyons Range	ditto	
Hunter, C E	Assistant, The Apcar Collieries, Ld	2, Fairlie Place	ditto	
Hunter, D. H.	Assistant, Jessop & Co, Ld	93, Clive Street	ditto	
Hunter-Arundell, W F	Assistant, Jardine, Skinner & Co	4, Clive Row	ditto	
Hurst, Frederic Alexander	Photographer, *Statesman*, Ld	Statesman House	ditto	
Hutcheon, William	Salesman, Marshall Sons & Co (India), Ld	99, Clive Street	ditto	

No.	Names.	Style or calling.	Residence or place of business.	Religion.
	Hutchison, C G	Assistant, Balmer, Lawrie & Co, Ld	103, Clive Street	Christian
	Hutchison, Edward Arthur	Assistant, James, Finlay & Co, Ld	1, Clive Street	ditto
	Hutchison, Hugh Arbuckle	Engineer, W Billinton & Co, Ld	Stephen House	ditto
	Hutson, David hpeoJs	Assistant, Ralli Brothers, Ld	16, Hare Street	ditto
	Hutton, G M	Sub-Accountant, Chartered Bank of India, Australia and China	1-1, Clive Street	ditto
	Huyshe, A E	Assistant, Kilburn & Co	4, Fairlie Place	ditto
	I			
	Inglis, Norman Lionel	Head Assistant, European Association	17, Stephen Court, Park Street	Christian
	Irwin, James	Assistant, Harman & Co, Ld	11, Government Place	ditto
	J			
	Jackson, D	Assistant, I G N & Ry Co, Ld	4, Fairlie Place	Christian
	Jackson, Frederick Bleasdale	Assistant, Worthington-Simpson, Ld	10, Clive Street	ditto
	Jackson, Henry Kenneth	Assistant, Prudential Assurance Co, Ld	Clive Buildings	ditto
	Jacob, D M	Assistant, Turner, Morrison & Co, Ld	6, Lyons Range	ditto
	Jacob, R J	Salesman, Remington Rand, Inc	3, Council House Street	Jew
	Jacob, Samuel Joseph	Assistant, Sinclair, Murray & Co, Ld	6, Royal Exchange Place	ditto
	Jacob, Joseph	Clerk, Army and Navy Stores, Ld	41, Chowringhee	ditto

Jacques, W H	Assistant, J Thomas & Co	8, Mission Row	ditto
Jahans, Norman Bernard	Assistant, Alfred, Herbert (India), Ld	13-3, Strand Road	ditto
James, A A	Stenographer, W H Brady & Co, Ld	26, Strand Road	ditto
James, Alan Sherman	Assistant, Hoare, Miller & Co, Ld	5, Fairlie Place	ditto
Jamieson, John Hutton	Assistant, James, Finlay & Co, Ld	1, Clive Street	ditto
Jamison, C G	Assistant, Mackinnon, Mackenzie & Co	8, Strand Road	ditto
Jarvis, Cecil John Edmund	Assistant, Royal Exchange Assurance	1 & 2, Old Court House Corner	ditto
Jarvis, Donald Edward Manners	Assistant, D J Keymer & Co, Ld	4, Lyons Range	ditto
Jary, Basil McLean	Engineer, W Billinton & Co, Ld	Stephen House	ditto
Jeff, R	Assistant, McLeod & Co	28, Dalhousie Square	ditto
Jenkin, C P M	Sub-Accountant, Chartered Bank of India, Australia & China	1-1, Clive Street	ditto
Jenkins, O T	Assistant, Balmer, Lawrie & Co, Ld	103, Clive Street	ditto
Jennings, Denzil Norman	Assistant, F W Heilgers & Co	1-1, Clive Street	ditto
John, Leon Carapiet	Assistant, Talbot & Co	Tower House	ditto
John, Samuel Henry	Timekeeper, Bengal Telephone Corpn, Ld	8, Hare Street	ditto
Johnson, R	Assistant, Balmer, Lawrie & Co, Ld	103, Clive Street	ditto
Johnson, S H	Assistant, H D Cartwright & Co	2, Clive Ghat Street	ditto
Jones, A G	Engineer, Calcutta Mint	47, Strand Road	ditto

No.	Name.	Style or calling.	Residence or place of business.	Religion.
	Jones, Arthur Llewellyn	Treasurer & House Manager, Humayan Properties, Ld	1, Humayan Place	Christian
	Jones, B S	Engineer, Calcutta Mint	47, Strand Road	ditto
	Jones, J.	Assistant, Balmer, Lawrie & Co, Ld	103, Clive Street	ditto
	Jones, J R	Assistant, Standard Vacuum Oil, Co	6, Church Lane	ditto
	Jones, N S	Engineer, Calcutta Mint	47, Strand Road	ditto
	Jones, Norman Clarence Henry	Storekeeper, Chloride Electrical Storage Co, Ld	4, Lyons Range	ditto
	Jones, P S	Chief Assistant, C O S Office, E I R	E I R House	ditto
	Jones, Paul J, B Sc	Clerk, D A G P & T Office	7, Koilaghat Street	ditto
	Jones, Stevenson Wilson	Assistant, Macneill & Co	2, Fairlie Place	ditto
	Jore, G C	Assistant, A G's Office, Bengal	Treasury Buildings	ditto
	Joscelyne, A K	Assistant, Lovelock & Lewes	4, Lyons Range	ditto
	Joseph, E M	Assistant, Grahams Trading Co (India), Ld	6, Lyons Range	ditto
	Joshep, Isaac Moses	Assistant, Walter, Bushnell, Ld	21, Old Court House Street	Jew
	Joshua, Jack Harry	Assistant, Planters' Stores & Agency Co, Ld	11, Clive Street	Christian
	Junior, Thomas	Assistant, T E Thomson & Co, Ld	9, Esplanade, East	ditto
	K			
	Kane, H W G	Assistant, Guest, Keen, Williams, Ld	7, Council House Street	Christian

Keiller, Douglas	Salvage Assessor, Sinclair, Murray & Co, Ld	6, Royal Exchange Place	ditto
Kendrew, N A	Assistant, Jardine, Skinner & Co	4, Clive Row	ditto
Kennedy, I G	Assistant, Jardine, Skinner & Co	4, Clive Row	ditto
Kerr, E L	Assistan, Jessop & Co, Ld	93, Clive Street	ditto
Kewley, C	Assistant, Price, Waterhouse, Peat & Co	B-4, Clive Buildings	ditto
Keyworth, Norman	Salesman, Marshall Sons & Co (India), Ld	99, Clive Street	ditto
Kidd, Frank Carlile	Assistant, F W Heilgers Co	1-1, Clive Street	ditto
Kidd, F H	Assistant, Thomas Duff & Co, Ld	3, Clive Row	ditto
Kidd, George Maxwell	Assistant, Bird & Co	1-1, Clive Street	ditto
Kilgour, Andrew McBlain	Assistant, Ranken & Co, Ld	4, Old Court House Street	ditto
Killick, W B	Assistant, I G N & Ry Co, Ld	4, Fairlie Place	ditto
King, D H	Measurer, Bengal Chamber of Commerce	2, Clive Street	ditto
King, H M	Assistant, Anderson Wright & Co	22, Strand Road	ditto
King, K F	Assistant, Mather & Platt, Ld	7, Hare Street	ditto
King, R B	Assistant, Andrew Yule & Co, Ld	8, Clive Row	ditto
Knight, Robert	Assistant, Craven Bros (Manchester), Ld	19-C, British Indian Street	ditto
Knight, R A	Assistant, Army & Navy Stores, Ld	41, Chowringhee	ditto
Kolb, E H	Assistant, Standard Vacuum Oil Co	6, Church Lane	ditto

No.	Names.	Style or calling.	Residence or place of business.	Religion.
	L			
	Lacey, Marten	Assistant, *Statesman*, Ld	Statesman House	Christian.
	Lacey, W C	Manager, Sitalprasad Kharagprasad	31, Burtolla Street	ditto
	Landeman, I S	Assistant, Jessop & Co, Ld	93, Clive Street	ditto
	Lane, Leopold Edgar	Assistant, *Statesman*, Ld	Statesman House	ditto
	Lane, Vivian Broughton	Assistant, Standard Vacuum Oil Co	6, Church Lane	ditto
	Lane, Walter Edward	Assistant Engineer, Scott & Saxby, Ld	19, British Indian Street	ditto
	Langlois, J	Superintendent, Coll Dept, Remington Rand, Inc	3, Council House Street	ditto
	Langton, John	Assistant, Ralli Brothers, Ld	16, Hare Street	ditto
	Lanyado, Yeddie	Assistant, E. D. Sasson & Co, Ld	101, Clive Street	Jew
	Large, Thomas	Line Inspector, Bengal Telephone Corporation, Ld	8, Hare Street	Christian
	Larkin, R S	Assistant, Mackinnon, Mackenzie & Co	16, Strand Road	ditto
	Larkins, W J	Measurer, Bengal Chamber of Commerce	2, Clive Street	ditto
	Last, R C	Assistant, I G N & Ry Co, Ld	4, Fairlie Place	ditto
	Law, Frank	Assistant, F W Heilgers & Co	1-1, Clive Street	ditto
	Law, Richard	Assistant Master, St. Paul's Higher Grade Mission School	13, Scott's Lane	ditto

Lawie, G D	Sub-Accountant, Chartered Bank of India, Australia and China	1-1, Clive Street	ditto
Lawrence, J A	Import Clerk, Mackinnon, Mackenzie & Co	8, Strand Road	ditto
Lawrence, Sidney Arthur	Reader, *Statesman*, Ld	Statesman House	ditto
Lawrenson, Robert Sinclair	Boiler Inspector	40-1A, Free School Street	ditto
Lawson, D H	Assistant, Jessop & Co, Ld	93, Clive Street	ditto
Lawson, H	Salesman, Remington Rand, Inc	3, Council House Street	ditto
Lawson, S E	Assistant, Kilburn & Co	4, Fairlie Place	ditto
Lawton, William	Assistant, Andrew Yule & Co, Ld	8, Clive Row	ditto
Le Blond, F	Assistant, Andrew Yule & Co, Ld	8, Clive Row	ditto
Lee, William Alford John	Assistant, Army & Navy Stores, Ld	41, Chowringhee	ditto
Leefe, George Noel	Assistant, Hamilton & Co, Ld	8, Old Court House Street	ditto
Leeming, Reginald Charles	Assistant, Burmah-Shell Co of India, Ld	Hongkong House	ditto
Lees, J	Assistant, J Thomas & Co	8, Mission Row	ditto
Le Fancheur, Robert	Assistant, North British & Mercantile Insurance Co, Ld	101-1, Clive Street	ditto
Le Franc, E H	Assistant, Harrisons & Crosfield, Ld	6, Church Lane	ditto
Leibenhals, C G	Assistant, Hall & Anderson, Ld	31, Chowringhee	ditto
Leicester, G F	Measurer, Bengal Chamber of Commerce	2, Clive Street	ditto

No.	Names.	Style or calling	Residence or place of business.	Religion.
	Leicester, Mervyn Terence	Assistant, Bengal Chamber of Commerce	2, Clive Street	Christian
	Leng, Leonard John	Assistant, W T Henley's Telegraph Works Co, Ld	Old Court House Corner	ditto
	Lennett, F I Gordon	Superintendent, Landing & Shipping, B I S N Co, Ld	9, Jetty	ditto
	Leonard, C P	Assistant, Standard Vacuum Oil, Co	6, Church Lane	ditto
	Le Patourel, Barry, MA	Assistant Master, La Martinière	11, Loudon Street	ditto
	Leslie, William, MA	Assistant, Duncan Bros & Co, Ld	101, Clive Street	ditto
	Leslie-Hall, J	Measurer, Bengal Chamber of Commerce	2, Clive Street	ditto
	Levi, Victor, BSc	Examiner of Accounts, Income-tax Office	6, Esplanade, East	ditto
	Lewis, Alfred	Assistant Engineer, *Statesman*, Ld	Statesman House	ditto
	Lewis, B E	Assistant, Grahams Trading Co (India), Ld	6, Lyons Range	ditto
	Lewis, H C	Assistant, Balmer, Lawrie & Co, Ld	103, Clive Street	ditto
	Lewis, Haywood Joseph	Assistant, Royal Calcutta Turf Club	11, Russell Street	ditto
	Lewis, M	Steno-typist, Traffic Department, E B R	3, Kaylaghat Street	ditto
	Lewis, Victor Andrew	Assistant, Blackwood, Bryson & Co, Ld	2, Mangoe Lane	ditto
	Lidderdale, Eric	Assistant, Bird & Co	1-1, Clive Street	ditto
	Liddle, G W	Assistant, J Thomas & Co	8, Mission Row	ditto

Liddle, W J	Sub-Accountant, Mercantile Bank of India, Ld	8, Clive Street	ditto
Lindsay, W	Assistant, Balmer Lawrie & Co, Ld	103, Clive Street	ditto
Ling, Samuel	Assistant, Bird & Co	1-1, Clive Street	ditto
Linnell, J M	Assistant, Standrad Life Assurance Co	32, Dalhousie Square	ditto
Linton, Harold Ashley	Assistant, Cooke & Kelvey	20, Old Court House Street	ditto
Littlewood, H S	Invoice Clerk, George Henderson & Co, Ld	101-1, Clive Street	ditto
Livermore, R	Assistant, J Thomas & Co	8, Mission Row	ditto
Lloyd, A C	Assistant, Barry & Co	2, Fairlie Place	ditto
Loader, H E	Sub-Editor, Thorne's, Ld	13, Ezra Mansions	ditto
Lobo, Joaquim Xavier	Stenographer, *Statesman*, Ld	Statesman House	ditto
Lobo, Rumaldo Justinian	Stenographer, *Statesman*, Ld	Statesman House	ditto
Lochore, Ian Duncan	Assistant Transport Officer (R S N), Macneill & Co	2, Fairlie Place	ditto
Lodrick, F W	Measurer, Bengal Chamber of Commerce	2, Clive Street	ditto
Lodrick, L W	Measurer, Bengal Chamber of Commerce	2, Clive Street	ditto
Lodrick, S B	Assistant, Lipton, Ld	9, Weston Street	ditto
Lofts, W	Assistant, Shaw, Wallace & Co	4, Bankshall Street	ditto

Names.	Style or calling.	Residence or place of business.	Religion.
Long, A D	Assistant, I G N & Ry Co, Ld	4, Fairlie Place	Christian
Longley, H J	Works Manager, Heatley and Gresham, Ld	6, Waterloo Street	ditto
Longhurst, G D	Assistant, Mackinnon Mackenzie & Co	16, Strand Road	ditto
Lovering, Arthur James	Assistant, Lyall Marshall & Co	4, Fairlie Place	ditto
Lovett, S C	Reader, Govt of India Press	8, Hastings Street	ditto
Low, A	Assistant, Bird & Co	1-1, Clive Street	ditto
Lucas, T R	Assistant, R V Briggs, Ld	8-B, Lall Bazar Street	ditto
Lugg, O W	Assistant, Bird & Co	1-1, Clive Street	ditto
Lumsden, John Gordon Babington	Assistant, Hoare Miller & Co, Ld	5, Fairlie Place	ditto
Lynch, D F	Assistant, Jessop & Co, Ld	93, Clive Street	ditto
M			
Mabbett, H J B	Assistant, Ranken & Co, Ld	4, Old Court House Street	Christian
Macey, T H	Measurer, Bengal Chamber of Commerce	2, Clive Street	ditto
MacDougall, J	Assistant, Jardine, Skinner & Co	4, Clive Row	ditto
MacFarlane, A F	Assistant, Jardine, Skinner & Co	4, Clive Row	ditto
MacFarlane, W	Assistant, Mackinnon, Mackenzie & Co	8, Strand Road	ditto

Mack, Davidwhite	Assistant Accountant, National Bank of India, Ld	104, Clive Street	ditto
Mackay, N A	Assistant, Heatley & Gresham Ld	6, Waterloo Street	ditto
Mackenzie, A	Assistant, Balmer, Lawrie & Co, Ld	103, Clive Street	ditto
Mackenzie, Colin	Works Manager, Electric Welding & Manufacturing Co (India), Ld	2, Fairlie Place	ditto
Mackenzie, Harish	Assistant, Indo-Burma Petroleum Co, Ld	8, Clive Street	ditto
Mackenzie, K A	Assistant, Jardine, Skinner & Co	4, Clive Row	ditto
Mackenzie, W H G	Asstt Supdt, P S's Office, E I R	E I R House	ditto
Mackie, J S	Architect, Mackintosh Burn, Ld	8, Clive Street	ditto
Mackinlay, G M	Assistant, Jardine, Skinner & Co	4, Clive Row	ditto
Mackinnon, A	Assistant, Mackinnon, Mackenzie & Co	16, Strand Road	ditto
Macklin, Cecil Henry	Assistant, Spencer & Co, Ld	32, Chowringhee	ditto
Mackrodt, L N	Assistant, Jessop & Co, Ld	93, Clive Street	ditto
Mackrodt, Archibald Vernon	Assistant, Texas Compay (India), Ld	11, Esplanade East	ditto
Maclauchlan, Colin Sinclair	Assistant, Davenport & Co, Ld	6, Church Lane	ditto
Maclennan, George Hope	Assistant, James Finlay & Co, Ld	1, Clive Street	ditto
Maclure, James Wyper	Assistant, Hoare Miller & Co, Ld.	5, Fairlie Place	ditto
Macmillan, W	Assistant, Babcock & Wilcox Ld	4, Bankshall Street	ditto

No.	Names.	Style or calling	Residence or place of business	Religion
	Madden, C A	Clerk, Geo Henderson & Co, Ld	101-1, Clive Street	Christian
	Maddocks, S W	Measurer, Bengal Chamber of Commerce	2, Clive Street	ditto
	Madge, D C	Measurer, Bengal Chamber of Commerce	2, Clive Street	ditto
	Maelzer, D J	Assistant, Imperial Chemical Industries (India), Ld	18, Strand Road	ditto
	Magnoni, B G	Proprietor, B Magnoni & Co	8, Royal Exchange Place	ditto
	Maidment, Henry St Clair	Journalist, *Statesman*, Ld	Statesman House	ditto
	Maitland, Oswald Cyril	Assistant, Ralli Bros, Ld	16, Hare Street	ditto
	Major, Harry Seymour	Assistant, Llewellyn & Co	9-1, Waterloo Street	ditto
	Manasseh, Alex	Assistant, Moran & Co, Ld	4, Lyons Range	Jew
	Mandle, Nathaniel	Reader, *Statesman*, Ld	Statesman House	Christian
	Mann, G A	Assistant, Mackinnon, Mackenzie & Co	16, Strand Road	ditto
	Mann, Patrick Wilmot, BA	Assistant, Bengal Secretariat, Political Department	Writers' Buildings	ditto
	Mann, V N	Measurer, Bengal Chamber of Commerce	2, Clive Street	ditto
	Manok, E S	Assistant, I G N & Ry Co, Ld	4, Fairlie Place	ditto
	Mansfield, A	Assistant, Balmer Lawrie & Co, Ld	103, Clive Street	ditto
	Manuk, Malcolm John	Assistant, Ralli Bros, Ld	16, Hare Street	ditto

Margrett, P C	Engineer, G E C (India), Ld	Magnet House, Chittaranjan Avenue (South).	ditto
Marcelline, Edwin Carlow	Assistant, South British Insurance Co, Ld	5, Clive Street	ditto
Marcon, E L M	Assistant, Superintendent, C O P S Office, E I R	E I R House	ditto
Marindin, F Jocelyn deVere, BA(Cantab).	Assistant, Burmah-Shell Co of India, Ld	Hongong House	ditto
Marklew, Ernest George	Assistant, Burmah-Shell Co of India, Ld	Hongkong House	ditto
Marr, Alexander Andrew	Assistant, Macneill & Co	2, Fairlie Place	ditto
Marr, A M	Assistant, McLeod & Co	28, Dalhousie Square	ditto
Marrow, C H	Assistant Superintendent, Tele Office, E I R	E I R House	ditto
Marsh, R J S	Sub-Accountant, Lloyds Bank, Ld	101-1, Clive Street	ditto
Marshall, Arthur Richard	Assistant to the Chief Electrical Engineer, C E S C, Ld	Victoria House	ditto
Marshall, Eric Albert	Assistant, Ralli Bros, Ld	16, Hare Street	ditto
Marshall, William Henry Allan	Assistant, F W Heilgers & Co	1-1, Clive Street	ditto
Martin, Arthur Ridley	Assistant, Ralli Bros, Ld	16, Hare Street	ditto
Martin, C A	Measurer, Bengal Chamber of Commerce	2, Clive Street	ditto
Martin, Clifford Ridley, BA	Assistant Master, St Thomas' School	58-B, Free School Street	ditto
Martin, John	Assistant Accountant, National Bank of India, Ld	104, Clive Street	ditto
Martin, J H	Assistant Superintending Engineer, B I S N Co, Ld	16, Strand Road	ditto

No.	Names.	Style or calling.	Residence or place of business.	Religion.
	Martin, Kenneth Bertram	Salesman, Army & Navy Stores, Ld	41, Chowringhee	Christian
	Martin, K V	Assistant, Imperial Chemical Industries (India), Ld	18, Strand Road	ditto
	Martin, Martyrose	Assistant, Hoare, Miller & Co, Ld	5, Fairlie Place	ditto
	Martin, Osmond Kenneth Ridley	Assistant, Ralli Bros, Ld	16, Hare Street	ditto
	Martin, Percival Spalding	Assistant, Mackenzie, Lyall & Co	5, Mission Row	ditto
	Martin, R	Surveyor, Mackintosh Burn, Ld	8, Clive Street	ditto
	Martin, David Henry	Assistant, Walter Bushnell, Ld	21, Old Court House Street	ditto
	Mason, J A	Assistant, Mackinnon, Mackenzie & Co	8, Strand Road	ditto
	Mason, William John	Assistant, Stewarts & Lloyds, Ld	6, Royal Exchange Place	ditto
	Mathew, S B	Claims Inspector, E B R	3, Kaylaghat Street	ditto
	Mathews, I K, BCom, GDA	Assistant, A-G's Office, Bengal	Treasury Buildings	ditto
	Mathieson, H	Assistant, Mackinnon, Mackenzie & Co	8, Strand Road	ditto
	Maunders, E W	Cargo Surveyor, Norman, Stewart & Co	9, Clive Street	ditto
	May, T G	Assistant, G E C (India), Ld	Magnet House, Chittaranjan Avenue (South).	ditto
	Mayers, W	Melter, Calcutta Mint	47, Strand Road	ditto
	McCarthy, Michall John	Sub-Accountant, Mercantile Bank of India, Ld	8, Clive Street	ditto
	McCaskie, C S	Asstt Supdg Engineer, B I S N Co, Ld	16, Strand Road	ditto

McConnel, Thomas Alexander	Assistant, Martin & Harris, Ld	17, Prinsep Street	ditto
McCraw, D	Assistant, McLeod & Co	28, Dalhousie Square	ditto
McCrea, R H	Assistant, Barry & Co	2, Fairlie Place	ditto
McCready, Horace E D Whaley	Assistant, Gillanders Arbuthnot & Co	8, Clive Street	ditto
McCulloch, C I	Measurer, Bengal Chamber of Commerce	2, Clive Street	ditto
McDonald, D A	Engineer, Calcutta Mint	47, Strand Road	ditto
McDonnell, R	Assistant, Heatly & Gresham, Ld	6, Waterloo Street	ditto
McEwan, D	Salesman, W H Brady & Co, Ld	Mercantile Buildings	ditto
McGowen, Alister	Assistant, Royal Calcutta Turf Club	11, Russell Street	ditto
McGregor, D R	Assistant, Innes Watson & Co	15, Clive Street	ditto
McIvor, D	Partner, Bright & McIvor	16, Chowringhee	ditto
McLaren, G H	Asstt Accountant, *Statesman*, Ltd	Statesman House	ditto
McLaren, John	Assistant, Alfred Herbert (India), Ld	13-3, Strand Road	ditto
McLeod, K G	Assistant, Andrew Yule & Co, Ld	8, Clive Row	ditto
McMullin, D J	P A to C O P S, E I R	E I R House	ditto

No.	Names.	Style or calling.	Residence or place of business.	Religion.
	McMurtrie, J B	Assistant, Glenfield & Kennedy, Ld	4, Fairlie Place	Christian
	McWilliam, C A	Assistant, Kilburn & Co	4, Fairlie Place	ditto
	Meikle, G	Assistant, Balmer, Lawrie & Co, Ld	103, Clive Street	ditto
	Mendes, Ivan Joseph	Head Assistant, Map Record & Issue Branch, Surveyor-General's Office.	13, Wood Street	ditto
	Mendies, Franklin Irvine	Assistant Superintendent, C E S C, Ld	Victoria House	ditto
	Mendies, Glyn Eustace	Assistant, W T Henley's Telegraph Works Co, Ld	Old Court House Corner	ditto
	Mendies, W	Measurer, Bengal Chamber of Commerce	2, Clive Street	ditto
	Mendieta, Isaac Daniel	Head Assistant, Survey of India	13, Wood Street	ditto
	Merrick, L A	Assistant, Morrison & Cottle, Ld	30-C, Chowringhee	ditto
	Mersh, G W	Measurer, Bengal Chamber of Commerce	2, Clive Street	ditto
	Metcalfe, M C	Assistant, Babcock Wilcox, Ld	4, Bankshall Street	ditto
	Meyer, O J	Measurer, Bengal Chamber of Commerce	2, Clive Street	ditto
	Michael, Joseph	Assistant, Bird & Co	1-1, Clive Street	ditto
	Michael, J	Assistant, J Thomas & Co	8, Mission Row	ditto
	Michael, Percival William	Assistant, Begg, Dunlop & Co, Ld	2, Hare Street	ditto

Michelmore, Walter Harold Strachan	Assistant, Bird & Co	1-1, Clive Street	ditto
Middleton, Robert George	Assistant, Macneill & Co	2, Fairlie Place	ditto
Miller, Alexander	Assistant, A & J Main & Co, Ld	10, Clive Street	ditto
Miller, Frederick Arthur Campbell	Assistant, Imperial Bank of India	3, Strand Road	ditto
Miller, J E	Assistant, Kilburn & Co	4, Fairlie Place	ditto
Miller, Patrick Noel	Assistant, Burmah Shell Co of India, Ltd	Hongkong House	ditto
Miller, R S	Assistant, Barry & Co	2, Fairlie Place	ditto
Miller, R T	Assistant, Lionel Edwards, Ltd	D-1, Clive Buildings	ditto
Mills, A D S	Measurer, Bengal Chamber of Commerce	2, Clive Street	ditto
Milne, James Davidson	Assistant, Harnack & Co	10, Old Court House Street	ditto
Milner, A G	Assistant, *Statesman*, Ld	Statesman House	ditto
Mingoil, David	Assistant, B I S N Co, Ltd	13, Lindsay Street	Jew
Minus, A H	Workshop Manager, McGregor & Balfour, Ld	11, Clive Street	Christian
Mitchell, M A	Measurer, Bengal Chamber of Commerce	2, Clive Street	ditto
Mitchell, Thomas Oliver	Assistant Accountant, National Bank of India, Ltd	104, Clive Street	ditto

No.	Names.	Style or calling.	Residence or place of business.	Religion.
	Mitchell, William Charles	Salesman, Stephens & Co, Ld	33, Bow Bazar Street	Christian
	Mitchell-Innes, Wilbert Ernest	Assistant, Hoare, Miller & Co, Ld	5, Fairlie Place	ditto
	Moffat, J H	Assistant, Jessop & Co, Ltd	93, Clive Street	ditto
	Moncrieff, F H W	Assistant, Jardine, Skinner & Co	4, Clive Row	ditto
	Monnier, Rudolph Scipio	Clerk, Machine Tools (India), Ld	Stephen House	ditto
	Moore, L	Assistant, Jessop & Co, Ld	93, Clive Street	ditto
	Morgan, E	Assistant, Balmer, Lawrie & Co, Ld	103, Clive Street	ditto
	Morgan, Robert William Davidson	Stock Broker, Stewart & Co	8, Clive Street	ditto
	Morgenstern, Maxwell	Assistant, Ralli Brothers, Ld	16, Hare Street	ditto
	Morrell, E	Assistant, Balmer, Lawrie & Co, Ld	103, Clive Street	ditto
	Morris, M M	Assistant, Standard Vacuum Oil Co	6, Church Lane	ditto
	Morris, Patrick Bowyer	Assistant, Davenport & Co, Ld	6, Church Lane	ditto
	Morris, Thomas	Clerk, Bengal Club	33, Chowringhee	ditto
	Morrison, James Binnie	Assistant, Bengal Chamber of Commerce	2, Clive Street	ditto
	Morrison, N	Assistant Superintending Engineer, B I S N Co, Ld	16, Strand Road	ditto

Morrison, P H	Assistant, Balmer Lawrie & Co, Ld	103, Clive Street		ditto
Moss, E J R	Measurer, Bengal Chamber of Commerce	2, Clive Street		ditto
Mowle, Lancelot	Salesman, Greaves Cotton & Co, Ld	60, Dharamtala Street		ditto
Mowle, R C	Assistant, Jardine, Skinner & Co	4, Clive Row		ditto
Mudie, D M	Asstt Supdtg Engr, B I S N Co, Ltd	16, Strand Road		ditto
Muir, J H	Assistant, James Finlay & Co, Ld	1, Clive Street		ditto
Muller, C H E	Assistant, Balmer, Lawrie & Co, Ld	103, Clive Street		ditto
Mullins, G E	Assistant, Burmah Shell Co of India, Ld	Hongkong House		ditto
Mullock, Denis Wilson, BA(Cantab.)	Assistant, Burmah Shell Co of India, Ld	Hongkong House		ditto
Munro, St E G	Measurer, Bengal Chamber of Commerce	2, Clive Street		ditto
Murgatroyd, F W	Clerk, C C M's Office, E I R	E I R House		ditto
Murison, Alister Ian	Assistant, James Finlay & Co, Ld	1, Clive Street		ditto
Murtough, H A	Assistant, Hoare Miller & Co, Ld	5, Fairlie Place		ditto
Murray, C B	Measurer, Bengal Chamber of Commerce	2, Clive Street		ditto
Musleah, E M	Inspector, C E S C, Ld	Victoria House		Jew
Musselwhite, A, ARPS	Manager, Bourne & Shepherd	141, Corporation Street		Christan

No.	Names.	Style or calling.	Residence or place of business.	Religion.
	N			
	Needham, Frederick William	Assistant, Graham Roberts & Co	5, Fairlie Place	Christian
	Nelson, Horace Frank Hamilton	Assistant, Martin & Co	12, Mission Row	ditto
	Nelson, John Lightbody	Assistant, Caledonian Insurance Co	8, Clive Street	ditto
	Nelson, P	Assistant, McLeod & Co	28, Dalhousie Square	ditto
	Nestor, Edwin Roy, BSc	Assistant Master, Calcutta Boys' School	72, Corporation Street	ditto
	Neunes, George	Assistant, Greaves Cotton & Co, Ld	60, Dharamtala Street	ditto
	Neubo, Ashley Charles	Assistant Accountant, T E Thomson & Co, Ld	9, Esplanade, East	ditto
	Neville, G W C	Assistant, Lovelock & Lewes	4, Lyons Range	ditto
	Neville-Scott, Guy Richmond	Reviser, *Statesman*, Ld	Statesman House	ditto
	Newbond, Arthur Joseph	Reader, W Newman & Co, Ld	3, Old Court House Street	ditto
	Newby, E H	Assistant, Jardine Skinner & Co	4, Clive Row	ditto
	Newing, E R	Assistant, Hall & Anderson, Ld	31, Chowringhee	ditto
	Newling, Vernon Henry	Engineer, F & C Osler, Ld	12, Old Court House Street	ditto
	Newman, John Sydney	Assistant, Ralli Bros, Ld	16, Hare Street	ditto
	Newson, A P	Assistant, Brooke Bond (India), Ld	2, Metcalfe Street	ditto

Newton, J A	Assistant, Octavious Steel & Co, Ltd	14, Old Court House Street	ditto
Newton, William Joseph	Assistant, Pigott Chapman & Co	6, Lyons Range	ditto
Niblett, Alexander Vernon	Assistant, Martin & Co	12, Mission Row	ditto
Nicholls, C F	Measurer, Bengal Chamber of Commerce	2, Clive Street	ditto
Nicholson, D	Engineer, G E C (India), Ld	Magnet House, Chittaranjan Avenue (South).	ditto
Nicolson, Thomas Frederick	Assistant, Blackwood, Bryson & Co Ld	2, Mangoe Lane	ditto
Nimmo, John Atholl Duncan, BA	Assistant, Duncan Brothers & Co, Ld	101, Clive Street	ditto
Noah, Ezekiel	Clerk, Army & Navy Stores, Ltd	41, Chowringhee	Jew
Noble, C S	Assistant, Mackinnon Mackenzie & Co	16, Strand Road	Christian
Noney, Robert Wallace	Stores Manager, A Milton & Co, Ld	156, Dharamtala Street	ditto
Norrish, A E	Assistant, Hall & Anderson, Ld	31, Chowringhee	ditto
Norwood, Wilfred Arthur	Assistant, Accountant, National Bank of India, Ld	104, Clive Street	ditto
Nulty, D J	Assistant, Balmer Lawrie & Co, Ld	103, Clive Street	ditto
Nunn, Eric Herbert	Assistant, office of the I G of Police	Writers' Buildings	ditto
Nunn, Lionel John	Clerk, Bengal Club	33, Chowringhee	ditto

No.	Names.	Style or calling.	Residence or place of business.	Religion.
	O			
	Oakley, R J L	Assistant, Kilburn & Co	4, Fairlie Place	Christian
	O'Connor, T A	Overhead and Cable Superintendent, Calcutta Tramways Co, Ld	7, Church Lane	ditto
	O'driscol, J O	Assistant, Ivan Jones, Ld	8, Dalhousie Square, East	ditto
	Odgers, Hector George	Sales Representative, Elford Edwards, Ltd	7, Old Court House Street	ditto
	Odgers, Leonard	Accountant, A Milton & Co, Ld	156, Dharamtala Street	ditto
	Ogilvie, Alec Drummond	Assistant, Andrew Yule & Co, Ltd	8, Clive Row	ditto
	Ogilvie, G C	Assistant, I G N & Ry Co, Ld	4, Fairlie Place	ditto
	Oliver, R	Assistant, Turner, Morrison & Co, Ld	6, Lyons Range	ditto
	Oliver, W J	L G S Officer, C O P S Office, E I R	E I R House	ditto
	Ortiger, John	Assistant, Worthington-Simpson, Ltd	10, Clive Street	ditto
	Osborne, M D	Architect, Macintosh Burn, Ld	8, Clive Street	ditto
	Osborne, W H	Measurer, Bengal Chamber of Commerce	2, Clive Street	ditto
	Oswald, James	Assistant, Balmer, Lawrie & Co, Ld	103, Clive Street	ditto
	Otto, F L	Assistant, Shaw, Wallace & Co	4, Bankshall Street	ditto
	P			
	Page, Eric Howard	Assistant, Begg, Dunlop & Co, Ld	2, Hare Street	Christian
	Paine, George Richard Montgomery	Assistant, Gillanders, Arbuthnot & Co	8, Clive Street	ditto

Painter, Geoffrey Sheppard	Assistant, Burmah Shell Co of India, Ld	Hongkong House	ditto
Pais, Vincent Ignatius	Assistant, Imperial Bank of India	3, Strand Road	ditto
Palmer, Harold William	Assistant, Bird & Co	1-1, Clive Street	ditto
Papworth, L	Foreman, Remington Rand, Inc	3, Council House Street	ditto
Parish, Patrick Edward Gladstone Woodbine.	Assistant, Gillanders, Arbuthnot & Co	8, Clive Street	ditto
Parker, E S	Assistant, T E Bevan & Co, Ld	Grosvenor House	ditto
Parker, Paul Richards	Examiner of Stores, Indian Stores Department (Inspection)	6, Esplanade, East	ditto
Parsons, R C	Inspector of Factories, Bengal	40-1A, Free School Street	ditto
Paterson, D J	Assistant, Jardine Skinner & Co	4, Clive Row	ditto
Paterson, George Duncan	Assistant, Moran & Co, Ld	4, Lyons Range	ditto
Paterson, Hector MacDonald	Assistant, Bird & Co	1-1, Clive Street	ditto
Paterson, J A C	Assistant, McLeod & Co	28, Dalhousie Square	ditto
Paton, A B G	Assistant, A & S Henry & Co, Ld	7, Grosvenor House	ditto
Paton, David Johnston	Assistant, King Bros	102, Clive Street	ditto
Paton, J M	Assistant, McLeod & Co	28, Dalhousie Square	ditto
Paul, Herbert	Assistant, Blackwood, Bryson Co, Ld	2, Mangoe Lane	ditto

No.	Names.	Style or calling.	Residence or place of business.	Religion.
	Paul, J Jones, BSc	Clerk, D A G P & T Office	7, Koilaghat Street	Christian
	Paul, J L	Assistant, Jessop & Co, Ld	93, Clive Street	ditto
	Paull, R C	Assistant, T E Bevan & Co, Ld	Grosvenor House	ditto
	Payne, Archibald Bestra	Purchase Clerk, Bengal Iron Co, Ld	4, Lyons Range	ditto
	Payne, R W	Measurer, Bengal Chamber of Commerce	2, Clive Street	ditto
	Peacock, D	Sub-Accountant, Chartered Bank of India, Australia and China	1-1, Clive Street	ditto
	Peacock, Philip Harold	Assistant, Army and Navy Stores, Ld	41, Chowringhee	ditto
	Pearce, D	Assistant, J Thomas & Co	8, Mission Row	ditto
	Pearson, Herbert Frederick	Assistant, *Statesman*, Ld	Statesman House	ditto
	Pearson, John Patrick, BA (Oxon.)	Asstt Manager, United Steel Cos (India), Ld	2, Avenue House, Chowringhee Square	ditto
	Peddar, A W	Assistant, Babcock & Wilcox, Ld	4, Bankshall Street	ditto
	Penheiro, F	Assistant, Hall & Anderson, Ld	31, Chowringhee	ditto
	Pentland, H J	Assistant, Mackinnon Mackenzie & Co	16, Strand Road	ditto
	Pentony, Llewellyn Richard	Assistant, F W Heilgers & Co	1-1, Clive Street	ditto
	Peppercorn, A J	Assistant, McLeod & Co	28, Dalhousie Square	ditto
	Pereira, A	Assistant, Jessop & Co, Ld	93, Clive Street	ditto

Pereira, Arthur Ivan	Assistant, British Refrigerators	30, Chowringhee	ditto
Pereira, A E	Assistant, Hall & Anderson, Ld	31, Chowringhee	ditto
Perry, B	Assistant, James Murray & Co	5, Old Court House Street	ditto
Perry, R B P	Sub-Accountant, Lloyd's Bank, Ld	101-1, Clive Street	ditto
Peters, Charles Stanley, BSc	Examiner of Accounts, I T Office	6, Esplanade East	ditto
Peters, P R	Rates Clerk, C C M's Office, E I R	E I R House	ditto
Peters, R E	Assistant, Balmer, Lawrie & Co, Ld	103, Clive Street	ditto
Peters, R G	Measurer, Bengal Chamber of Commerce	2, Clive Street	ditto
Peters, W W	Assistant, Lovelock & Lewes	4, Lyons Range	ditto
Peterson, John William, BA	Assistant Master, St Thomas' School	58-B, Free School Street	ditto
Petrie, G P	Assistant, McGregor & Balfour, Ld	11, Clive Street	ditto
Phillippe, Eugene Alefis	Assistant Engineer, *Statesman*, Ld	Statesman House	ditto
Phillips, A	Assistant, Mackinnon, Mackenzie & Co	8, Strand Road	ditto
Phillips, E C	Sub-Accountant, Chartered Bank of India, Australia & China	1-1, Clive Street	ditto
Phillips, Harry George	Machine Printer, Photo-Litho Branch, Surveyor-General's Office	14, Wood Street	ditto
Phillips, Herbert Angus Pengelly	Master, Elias Meyer Free School and Talmud Torah	50, Bowbazar Street	ditto

No.	Names.	Style or calling.	Residence or place of business.	Religion.
	Phillips, Thomas Mafeking	Assistant, Marconi I.M.C. Co, Ld	6, Old Post Office Street	Christian
	Phoenix, N B	Spl Inspector, Traffic Dept, E B R	3, Koilaghat Street	ditto
	Pierce, E	Assistant, Jessop & Co, Ld	93, Clive Street	ditto
	Pierson, S C F	Assistant, J Thomas & Co	8, Mission Row	ditto
	Piffard, Hume	Assistant, Burmah Shell Co of India, Ld	Hongkong House	ditto
	Pinto, Bernard	Assistant, Commercial Credit Corporation, Ld	20, Park Street	ditto
	Pithie, Edward John	Salesman, Birla Brothers, Ld	8, Royal Exchange Place	ditto
	Platel, A J	Assistant, Balmer, Lawrie & Co, Ld	103, Clive Street	ditto
	Platel, R E, BA	Inspector Surveyor, I T Office	3, Government Place, West	ditto
	Playfair, Arthur Melville	Assistant, Macneill & Co	2, Fairlie Place	ditto
	Plested, S J	Assistant, Mackinnon Mackenzie & Co	16, Strand Road	ditto
	Pluck, John Robert Fred	Assistant, Burmah Shell Co of India, Ld	Hongkong House	ditto
	Poke, Ernest Bertram	Assistant, I R G P & T W Co, Ld	7, Old Court House Street	ditto
	Pole, Ronald Wallace	Assistant, Kodak, Ld	22, Canning Street	ditto
	Ponting, E A	Counter Clerk, The Dunlop Rubber Co (India), Ld	42, Free School Street	ditto
	Popovits, D M	Chief Store Keeper, G E C (India), Ld	Magnet House, Chittaranjan Avenue (South).	ditto

Pordage, D	Measurer, Bengal Chamber of Commerce	2, Clive Street	ditto
Porter, A L	Assistant, Brooke Bond (India), Ld	2, Metcalfe Street	ditto
Porthouse, A D	Assistant, I G N & Ry Co, Ld	4, Fairlie Place	ditto
Portugal, Brian	Asstt Manager, Louis Drefus & Co	2, Clive Row	ditto
Pote, F G	Assistant, Turner, Morrison & Co, Ld	6, Lyons Range	ditto
Potter, J	Assistant, Phœnix Assurance Co, Ld	28, Dalhousie Square	ditto
Poulton, Frank	Journalist, *Statesman*, Ld	Statesman House	ditto
Powell, Geoffrey Edward	Journalist, *Statesman*, Ld	Statesman House	ditto
Powell, L A	Assistant Accountant, The P & O Banking Corpn, Ld	1, Fairlie Place	ditto
Power, A T	Stenographer, Imperial Chemical Industries (India), Ld	18, Strand Road	ditto
Power, H	Assistant, Jessop & Co, Ld	93, Clive Street	ditto
Pratt, T H	Assistant, Cargo Supdt, B I S N Co, Ld	8, Strand Road	ditto
Preece, Morley Cutlack	Advt Canvasser, " Star of India "	3, Wellesley Place	ditto
Pritchard, John	Assistant, Ludlow Jute Co, Ld	7, Royal Exchange Place	ditto
Pritchard, John	Assistant, Whiteaway Laidlaw & Co, Ld	7, Chowringhee	ditto
Proctor, Donald Henry Torrence	Sales Representative, Elford Edwards, Ld	7, Old Court House Street	ditto

No.	Names.	Style or calling.	Residence or place of business.	Religion.
	Prosser, T S	Assistant, A M Mair & Co	6, Royal Exchange Place	Christian
	Pulleyn, Charles Bertram	Assistant, Spencer & Co, Ld	32, Chowringhee	ditto
	Purdy, J	Assistant, Mackinnon Mackenzie & Co	16, Strand Road	ditto
	Purser, B M	Sub-Accountant, Chartered Bank of India, Australia and China	1-1, Clive Street	ditto
	Pyne, H C	Assistant, Jessop & Co, Ld	93, Clive Street	ditto
	Q			
	Quayle, H M	Assistant Accountant, Calcutta Tramways Co, Ld	7, Church Lane	Christian
	Quick, K J	Assistant, G E C (India), Ld	Magnet House, Central Avenue (South)	ditto
	Quigley, Richard	Assistant, Samuel Fitze & Co, Ld	26, Chowringhee	ditto
	Quin, John Simpson	Assistant, Macneill & Co	2, Fairlie Place	ditto
	R			
	Rae, J	Sub-Accountant, Chartered Bank of India, Australia & China	1-1, Clive Street	Christian
	Rankin, E H	Assistant, Standard Vacuum Oil Co	6, Church Lane	ditto
	Raymond, Abraham	Assistant, Senda & Co (India), Ld	135, Canning Street	Jew
	Rayner, James Bryan FitzGerald	Assistant, Davenport & Co, Ld	6, Church Lane	Christian
	Raynor, Vernon H (Capt)	Salesman, Godrej & Boyce Mfg Co, Ld	102, Clive Street	ditto
	Reid, E I Rendell	Engineer, G E C (India), Ld	Magnet House, Central Avenue (South)	ditto

Read, H	Assistant, Balmer, Lawrie & Co, Ld	103, Clive Street	ditto
Rearden, George F	Circuit Manager, Humayun Properties, Ld	1, Humayun Place	ditto
Rebello, F J	Assistant, Stephens & Co	33, Bowbazar Street	ditto
Reid, Alexander McLean	Journalist, *Statesman*, Ld	Statesman House	ditto
Reid, Athole William	Assistant, Macneill & Co	2, Fairlie Place	ditto
Reid, B C	Measurer, Bengal Chamber of Commerce	2, Clive Street	ditto
Reid, Donald Allan	Assistant, Pigott, Chapman & Co	6, Lyons Range	ditto
Reid, H E	Measurer, Bengal Chamber of Commerce	2, Clive Street	ditto
Reid, J E	Engineer, G E C (India), Ld	Magnet House, Chittaranjan Avenue (South)	ditto
Reid, M D	Assistant, Turner Morrison & Co, Ld	6, Lyons Range	ditto
Rembold, Joseph Mark	Assistant, Burmah Shell Co of India, Ld	Hongkong House	ditto
Remedios, A	Assistant, Gladstone, Wyllie & Co	4, Fairlie Place	ditto
Remedios, Aquino	Clerk, Prudential Assurance Co, Ld	Clive Buildings	ditto
Remedios, Edward Francis Lewis	Assistant, Bengal Chamber of Commerce	2, Clive Street	ditto
Renwick, H M	Assistant, Geo Henderson & Co, Ld	101-1, Clive Street	ditto
Revis, W	Draftsman, C M E's Office, E I R	E I R House	ditto
Reynolds, Kenneth Richardson	Assistant, Macneill & Co	2, Fairlie Place	ditto

No.	Names.	Style or calling.	Residence or place of business.	Religion.
	Rhodes, Keith Wemyss	Assistant, Hoare Miller & Co, Ld	5, Fairlie Place	Christian
	Rhodes, Samuel N, BA (Birmingham)	Assistant Master, La Martinière	11, Loudon Street	ditto
	Ribeiro, Sydney	Assistant, Office of the Zoological Survey of India	Indian Museum	ditto
	Rich, Stanley Frederick	P A to Mg Director, Walford Transport, Ld	71-73, Park Street	ditto
	Richards, William	Office Superintendent, I B Petroleum Co, Ld	8, Clive Street	ditto
	Rickard, R M	Assistant, David Sassoon & Co, Ld	4, Lyons Range	ditto
	Ricketts, Cyril Bertram	Assistant, Ralli Brothers, Ld	16, Hare Street	ditto
	Ricketts, Raymond Dunsford	Assistant, Ralli Brothers, Ld	16, Hare Street	ditto
	Ridley, Edward Hybart	Assistant, Harman & Co, Ld	11, Government Place	ditto
	Ridsdale, L A	Engineer, Calcutta Mint	47, Strand Road	ditto
	Rigby, J	Assistant, Price, Waterhouse, Peat & Co	B-4, Clive Buildings	ditto
	Rigby, William James	Engineer, W & T Avery, Ld	11, Crooked Lane	ditto
	Rind, Gilbert McNeil	Sub-Accountant, Mercantile Bank of India, Ld	8, Clive Street	ditto
	Ritchie, James McPhil	Assistant, Bird & Co	1-1, Clive Street	ditto
	Ritchie, John Smith	Sub-Accountant, Mercantile Bank of India, Ld	8, Clive Street	ditto
	Rivers, W F	Assistant, Standard Vacuum Oil Co	6, Church Lane	ditto
	Rivett, A T	Assistant Traffic Manager, Calcutta Tramways Co, Ld	7, Church Lane	ditto

Roberts, C	Assistant, The Indian and Eastern Engineering Co, Ld	5, Mission Row	ditto
Roberts, F	Clerk, C M E's Office, E I R	E I R House	ditto
Roberts, John H	Godown Manager, Baldwin Locomotive Works	5, Dalhousie Square	ditto
Robertson, A	Assistant, Barry & Co	2, Fairlie Place	ditto
Robertson, Bertram Gerald	Superintendent, Town Hall	4, Esplanade, West	ditto
Robertson, C A	Measurer, Bengal Chamber of Commerce	2, Clive Street	ditto
Robertson, Francis Edmund	Assistant, Commercial Intelligence Department, India	1, Council House Street	ditto
Robertson, Henry Leslie	Assistant, Hoare, Miller & Co, Ld	5, Fairlie Place	ditto
Robinson, Donald	Assistant, F W Heilgers & Co	1-1, Clive Street	ditto
Robinson, Frank Cecil	Office Manager, George Spencer, Moulton & Co (India), Ld	8, Esplanade, East	ditto
Robinson, J E	Assistant Superintendent, C O S Office, E I R	E I R House	ditto
Robinson, W B	Assistant Coal Manager, E I R	E I R House	ditto

No.	Names.	Style or calling.	Residence or place of business.	Religion.
	Rodgers, J R	Assistant, Jessop & Co, Ld	93, Clive Street	Christian
	Rodrigues, F	Assistant, Hall & Anderson, Ld	31, Chowringhee	ditto
	Rodrigues, J C	Publicity Clerk, C C M's Office, E I R	E I R House	ditto
	Rodrigues, Lawrence	Assistant, Govan Bros, Ld	20, Park Street	ditto
	Roger, W D	Assistant, J Thomas & Co	8, Mission Row	ditto
	Rogers, L F	Account Executive, D J Keymer & Co, Ld	4, Lyons Range	ditto
	Rogers, William	Assistant, Lyall Marshall & Co	4, Fairlie Place	ditto
	Ronaldson, S	Assistant, Mackinnon, Mackenzie & Co	16, Strand Road	ditto
	Rooke, W A	Assistant, Bird & Co	1-1, Clive Street	ditto
	Rooke, W H	Measurer, Bengal Chamber of Commerce	2, Clive Street	ditto
	Rose, A J	Assistant Accountant, Port Commissioners' Office	Strand Road	ditto
	Rose, H H	Assistant, Balmer, Lawrie & Co, Ld	103, Clive Street	ditto

Ross, D E A	Measurer, Bengal Chamber of Commerce	2, Clive Street	ditto
Ross, John Horatio Hardcastle	Assistant, James, Finlay & Co, Ld	1, Clive Street	ditto
Ross, John	Assistant, Landale & Clark, Ld	11, Clive Street	ditto
Rotshton, G L	Assistant, Price, Waterhouse, Peat & Co	B-4, Clive Buildings	ditto
Rowe, William Stacey	Sub-Accountant, Grindlay & Co, Ld	6, Church Lane	ditto
Rowe, D L V	Assistant, Price, Waterhouse, Peat & Co	B-4, Clive Buildings	ditto
Rowland, J A	Audit Inspector, Port Commissioners' Office	Strand Road	ditto
Royle, Kenneth Brooks	Assistant, Planters' Stores & Agency Co, Ld	11, Clive Street	ditto
Rozario, A D	Section-Holder, P S Office, E I R	E I R House	ditto
Rundlett , R C	Assistant, Jessop & Co, Ld	93, Clive Street	ditto
Runge, Conrad	Assistant, W H Harton & Co, Ld	5, Clive Ghat Street	ditto
Russell, Joseph	Salesman, C C Wakefield & Co, Ld	7, Royal Exchange Place	ditto

No.	Names.	Style or calling.	Residence or place of business.	Religion.
	Ruthven, F D	Assistant, Landale & Morgan	3, Fairlie Place	Christian
	Ryan, Alfred George	Mains Jointer, C E S C, Ld	Victoria House	ditto
	Ryan, Danial O'Connell	Assistant, Landale & Clark, Ld	11, Clive Street	ditto
	S			
	Salmond, J	Assistant Accountant, National Bank of India, Ld	104, Clive Street	Christian
	Sample, C G	Assistant, Standard Vacuum Oil Co	6, Church Lane	ditto
	Samuel, Alexander	Stenographer, *Statesman*, Ld	Statesman House	ditto
	Samuel, Benjamin	Assistant, Tata Iron & Steel Co, Ld	100, Clive Street	Jew
	Samuel, Joseph	Draftsman, Surveyor-General's Office	13, Wood Street	Christian
	Samuel, Stanley	Stenographer, Metro-Goldwyn-Mayer, India, Ld	5, Chowringhee Road	ditto
	Samuel, Sushil	Assistant, Mackinnon, Mackenzie & Co	8, Strand Road	ditto

Samuels, G	Assistant, G Rogers & Co	5, Dalhousie Square, East	ditto
Samuels, Leslie Henry	Assistant, London & Lancashire Insurance Co, Ld	2, Fairlie Place	ditto
Sandelands, D I	Assistant, McLeod & Co	28, Dalhousie Square	ditto
Sara, S E	Assistant, Balmer Lawrie & Co, Ld	103, Clive Street	ditto
Saunders, Alfred William	Engineer, Linotype & Machinery, Ld	21, Bowbazar Street	ditto
Savidra, J A	Claims Inspector, E B R	3, Koilaghat Street	ditto
Scott, A W	Assistant, J Thomas & Co	8, Mission Row	ditto
Scott, Claude John	Sub-Editor, *Statesman*, Ld	Statesman House	ditto
Scott, David Baillie	Assistant, Bird & Co	1-1, Clive Street	ditto
Scott, Sidney Murray	Assistant, Burmah Shell Co of India, Ld	Hongkong House	ditto
Scott, W B	Assistant, Remington Rand, Inc	3, Council House Street	ditto
Scrimgeour, Frank Henry Vernon	Assistant, Duncan Bros & Co, Ld	101, Clive Street	ditto

No.	Names.	Style or calling.	Residence or place of business.	Religion.
	Scurrah, Maurice Shaw	Assistant, *Statesman*, Ld	Statesman House	Christian
	Scutt, Keith William, B A	Assistant, D J Keymer & Co, Ld	4, Lyons Range	ditto
	Seaman, E	Assistant, Allen & Hanburys, Ld	C-3, Clive Buildings	ditto
	Seignior, Capt C H Townsend	Marine Superintendent, Macneill & Co	2, Fairlie Place	ditto
	Selfe, Frank Edward	Assistant Engraver, Survey of India	13, Wood Street	ditto
	Sellars, W H	Assistant, D J Keymer & Co, Ld	4, Lyons Range	ditto
	Sevilton, I L Owen	Salesman, Minimax Ld	Mercantile Buildings	ditto
	Sharman, D	Assistant, Kilburn & Co	4, Fairlie Place	ditto
	Sharp, W	Assistant, Thomas Duff & Co, Ld	3, Clive Row	ditto
	Shaw, C M	Assistant, G E C (India), Ld	Magnet House, Chittaranjan Avenue (South).	ditto
	Shaw, Edward Barrie	Sub-Editor, *Statesman*, Ld	Statesman House	ditto
	Shaw, Joseph West	Salesman, Roneo, Ld	32-1, Dalhousie Square	ditto

Shaw, R	Assistant, Barry & Co	2, Fairlie Place	ditto
Sheehan, F G	Assistant, Remington Rand, Inc	3, Council House Street	ditto
Shellenberger, H R	Assistant, Standard Vacuum Oil Co	6, Church Lane	ditto
Sheriff, R	Assistant, Hall & Anderson, Ld	31, Chowringhee	ditto
Sherman, Harold Randolf	Assistant Manager, Walford Transport, Ld	71-73, Park Street	ditto
Shircore, W	Assistant, Grahams Trading Co (India), Ld	6, Lyons Range	ditto
Shirtcliffe, J F	Assistant, Ocean Accident & Guarantee Corporation, Ld	32-1, Dalhousie Square, South	ditto
Shuldham, D P	Assistant, Gladstone, Wyllie & Co	4, Fairlie Place	ditto
Shute, J K	Sub-Accountant, Lloyds Bank, Ld	101-1, Clive Street	ditto
Shuttleworth, Leslie	Assistant, F W Heilgers & Co	1-1, Clive Street	ditto
Siddons, J	Assistant, W H Targett & Co	1, Commercial Buildings	Jew
Silas, Abraham	Assistant, David, Sassoon & Co, Ld	4, Lyons Range	ditto
Silver, L C	Measurer, Bengal Chamber of Commerce	2, Clive Street	Christian
Simons, Arthur Lionel	Assistant Master, St Thomas' School	58-B, Free School Street	ditto

No.	Names.	Style or calling.	Residence or place of business.	Religion.
	Simpson, A G	Assistant, George Henderson & Co, Ld	101-1, Clive Street	Christian
	Simpson, A L	Engineer, Calcutta Mint	47, Strand Road	ditto
	Simpson, A L	Assistant, Balmer, Lawrie & Co, Ld	103, Clive Street	ditto
	Simpson, Balfour Bruce	Assistant, Moran & Co, Ld	4, Lyons Range	ditto
	Simpson, G H	Salesman, Marshall Sons & Co (India), Ld	99, Clive Street	ditto
	Simpson, T R	Assistant, Burn & Co, Ld	12, Mission Row	ditto
	Sims, E H	Assistant, Guest, Keen, Williams, Ld	7, Council House Street	ditto
	Sinclair, Ernest Gordon	Assistant, Gillanders, Arbuthnot & Co	8, Clive Street	ditto
	Sinclair, H G	Assistant, Balmer Lawrie & Co, Ld	103, Clive Street	ditto
	Sinclair, W J	Assistant, Octavius Steel & Co, Ld	14, Old Court House Street	ditto
	Sinclair-Day, Dennis	Advertising Manager, Lipton, Ld	9, Weston Street	ditto
	Sitwell, Isla William Hurt	Assistant, Burmah Shell Co of India, Ld	Hongkong House	ditto
	Skelhorn, Charles Arjuna	Assistant-in-charge, Shipping Department, Grindlay & Co, Ld	6, Church Lane	ditto
	Skinner, A G	Assistant, Jessop & Co, Ld	93, Clive Street	ditto

Skinner, F W B	Measurer, Bengal Chamber of Commerce	2, Clive Street	ditto
Skinner, P W S	Sub-Accountant, Chartered Bank of India, Australia and China	1-1, Clive Street	ditto
Slade, S	Assistant, Lipton, Ld	9, Weston Street	ditto
Small, C O	Assistant, McLeod & Co	28, Dalhousie Square	ditto
Smallwood, R P F	Assistant, Ocean Accident & Guarantee Corporation, Ld	32-1, Dalhousie Square, South	ditto
Smart, George Peter	Sub-Accountant, Grindlay & Co, Ld	6, Church Lane	ditto
Smethurst, Thomas Victor	Mains Jointer, C E S C, Ld	Victoria House	ditto
Smith, A	Dy Traffic Manager, Calcutta Tramways Co, Ld	7, Church Lane	ditto
Smith, A C	Examiner of Accounts, Income-tax Office,	3, Government Place, West	ditto
Smith, A K	Sub-Accountant, Chartered Bank of India, Australia and China	1-1, Clive Street	ditto
Smith, C V	Proprietor, City Press	9, Strand Road	ditto
Smith, D M	Engineer, G E C (India), Ld	Magnet House, Central Avenue (South)	ditto
Smith, D S	Assistant, Landale & Morgan	3, Fairlie Place	ditto
Smith, Edward Alexander	Mains Jointer, C E S C, Ld	Victoria House	ditto

No.	Names.	Style or calling.	Residence or place of business.	Religion.
	Smith, Eric Baird ..	Assistant, Fraser & Co, Ld	4, Fairlie Place	Christian
	Smith, Frank Gwyther ..	Assistant, F C Pallachi & Co	7, Royal Exchange Place	ditto
	Smith, G ..	Assistant, G E C (India), Ld	Magnet House, Chittaranjan Avenue (South)	ditto
	Smith, Henry Malcolm ..	Assistant, Hoare Miller & Co, Ld	5, Fairlie Place	ditto
	Smith, J ..	Assistant, J Thomas & Co	8, Mission Row	ditto
	Smith, John Sydney ..	Assistant, Landale & Morgan	3, Fairlie Place	ditto
	Smith, Kenneth Waldo ..	Traveller, Alfred Herbert (India), Ld	13-3, Strand Road	ditto
	Smith, Kenneth Weir ..	Assistant Accountant, National Bank of India, Ld	104, Clive Street	ditto
	Smith, R ..	Assistant, Jessop & Co, Ld	93, Clive Street	ditto
	Smith, S ..	Assistant, Brooke Bond (India), Ld	2, Metcalfe Street	ditto
	Smith, Stanley Gwyther	Assistant, Bird & Co	1-1, Clive Street	ditto
	Smith, W H ..	Assistant, Thacker's Press and Directories, Ld	6-B, Bentinck Street	ditto
	Smith, V A ..	Assistant Accountant, Calcutta Tramways Co, Ld	7, Church Lane	ditto

Smythe, E M	Assistant, Jardine, Skinner & Co	4, Clive Row	ditto
Snellekez, H W	Superintendent, Landing and Shipping Dept, B I S N Co, Ld	8, Strand Road	ditto
Soloman, A E	Assistant, Ivan Jones, Ld	8, Dalhousie Square, East	Jew
Somerville, A D	Assistant, Jardine, Skinner & Co	4, Clive Row	Christian
Soubolle, Montfort Gervase	Assistant, Bengal Chamber of Commerce	2, Clive Street	ditto
Souce, C A	Measurer, Bengal Chamber of Commerce	2, Clive Street	ditto
Spark, F	Salesman, Remington Rand, Inc	3, Council House Street	ditto
Sparkes, Eric Arthur	Assistant-in-charge, Passage Department, Grindlay & Co, Ld	6, Church Lane	ditto
Spencer, H J	Assistant, Calcutta Mint	47, Strand Road	ditto
Stafford, D M	Assistant, Mackinnon Mackenzie & Co	16, Strand Road	ditto
Stalker, J H	Assistant, Thomas Duff & Co, Ld	3, Clive Row	ditto
Standish, N	Assistant, McLeod & Co	28, Dalhousie Square	ditto
Stanley, D R	Assistant, Balmer, Lawrie & Co, Ld	103, Clive Street	ditto

No.	Names.	Style or calling.	Residence or place of business.	Religion.
	Stanmore, E J H	Store-keeper, Machine Tools (India), Ld	Stephen House	Christian
	Stannard, Leonard Russell	Assistant, Army & Navy Stores, Ld	41, Chowringhee	ditto
	Stapleton, J	Measurer, Bengal Chamber of Commerce	2, Clive Street	ditto
	Staynor, Denis Elver	Clerk, C O P S Office, E I R	E I R House	ditto
	Steel, C S	Inspector of Factories, Bengal	40-1A, Free School Street	ditto
	Stephens, Edwin Arnold	Assistant, Ralli Brothers, Ld	16, Hare Street	ditto
	Stephens, H S	Assistant, Turner, Morrison & Co, Ld	6, Lyons Range	ditto
	Stevens, George Donald Ross	Assistant, Macneill & Co	2, Fairlie Place	ditto
	Stevens, Michael George	Assistant, Ralli Brothers, Ld	16, Hare Street	ditto
	Stevenson, G	Assistant, Jardine, Skinner & Co	4, Clive Row	ditto
	Stevenson, R L, B. Sc (Agr)	Assistant, Imperial Chemical Industries (India) Ld	18, Strand Road	ditto
	Stevenson, Sidney	Assistant, James, Finlay & Co, Ld	1, Clive Street	ditto
	Stewart, E A	Assistant, Jessop & Co, Ld	93, Clive Street	ditto
	Stewart, J A	Assistant, Halley Brothers, Ld	7, Canning Street	ditto

Stewart, James Mellis	Assistant, Bird & Co	1-1, Clive Street	ditto
Stewart, William Harvey	Assistant, Bird & Co	1-1, Clive Street	ditto
Stock, L C A	Clerk, C C M's Office, E I R	E I R House	ditto
Stone, B C K	Drawing Office Supdt, Calcutta Improvement Trust	5, Clive Street	ditto
Stratton, Alexander Robertson	Assistant, Bird & Co	1-1, Clive Street	ditto
Stronach, L A	Director, L A Stronach & Co (India), Ld	Norton Buildings	ditto
Struthers, Robert	Assistant, T E Thomson & Co, Ld	9, Esplanade, East	ditto
Stubbs, A W	Salesman, Alfred Herbert (India), Ld	5, Dalhousie Square	ditto
Style, H A	Assistant, Geo. Henderson & Co, Ld	101-1, Clive Street	ditto
Sumption, Charles Edward	Assistant Master, The Calcutta Boys' School	72, Corporation Street	ditto
Sutherland, B A	Assistant, Mackenzie Lyall & Co	5, Mission Row	ditto
Swabey, Leslie J Prickett	Assistant, Burmah Shell Co of India, Ld	Hongkong House	ditto
Swales, F W	Assistant, Standard Vacuum Oil Co	6, Church Lane	ditto
Swann, Alec Jefferey	Clerk, Bengal Club	33, Chowringhee	ditto

No.	Names.	Style or calling.	Residence or place of business.	Religion.
	Swann, John Andrew Keith	Assistant, Imperial Bank of India	3, Strand Road	Christian
	Swaris, A V	Measurer, Bengal Chamber of Commerce	2, Clive Street	ditto
	Swaris, Charles	Assistant, Lipton, Ld	9, Weston Street	ditto
	Sweet, Robert Cecil	Assistant, Moran & Co, Ld	4, Lyons Range	ditto
	Sykes, P H	Assistant, Balmer, Lawrie & Co, Ld	103, Clive Street	ditto
	Syrett, John Earnest	Assistant, Burmah Shell Co of India, Ld	Hongkong House	ditto
	T			
	Taft, E	Assistant, Brooke Bond, India, Ld	2, Metcalfe Street	ditto
	Tallack, Hugh Mackay	Assistant, Macneill & Co	2, Fairlie place	ditto
	Tanfield, F R	Assistant, Liverpool & London & Globe Insurance Co, Ld	26, Dalhousie Square	ditto
	Tanner, D J	Assistant, Remington Rand, Inc	3, Council House Street	ditto
	Tassie, C W	Assistant, James Finlay & Co, Ld	1, Clive Street	ditto
	Tattersall, A C	Assistant, Hall & Anderson, Ld	31, Chowringhee	ditto
	Tatchell, McKean Edward	Art Director, D J Keymer & Co, Ld	4, Lyons Range	ditto

Taylor, C K	Technical Assistant, Robert Ingham Clark & Co, Ld	2, Clive Row	ditto
Taylor, David G	Assistant, Taylor's Gramophone Saloon	15-4, Chowringhee	ditto
Taylor, Frank	Assistant, Caledonian Printing Co, Ld	3, Wellesley Place	ditto
Taylor, G W	Assistant, Lovelock & Lewes	4, Lyons Range	ditto
Taylor, Harry Eric Fitzgerald	Assistant, Macneill & Co	2, Fairlie Place	ditto
Taylor, W R	Assistant, Jute Industries, Ld	1-A, Hare Street	ditto
Teasdale, Dennis George Whigham	Assistant, Bird & Co	1-1, Clive Street	ditto
Tellis, Albert	Store-keeper, May & Baker (India), Ld	11, Clive Street	ditto
Tellis, Vivian	Assistant, May & Baker (India), Ld	11, Clive Street	ditto
Thaddeus, W A	Measurer, Bengal Chamber of Commerce	2, Clive Street	ditto
Thatcher, Percy	Foreman, J B Norton & Sons, Ld	Norton Buildings	ditto
Thom, C D	Assistant, George, Henderson & Co, Ld	101-1, Clive Street	ditto
Thom, James	Salvage Assessor, Sinclair Murray & Co, Ld	6, Royal Exchange Place	ditto
Thomas, Basil Arthur	Assistant, Bird & Co	1-1, Clive Street	ditto

No.	Names.	Style or calling.	Residence or place of business.	Religion.
	Thomas, C H	Assistant, J Thomas & Co	8, Mission Row	Christian
	Thomas, Clifford	Assistant, Lionel Edwards, Ld	D-1, Clive Buildings	ditto
	Thomas, George Arthur	Head Litho Machine Printer, Surveyor-General's Office	14, Wood Street	ditto
	Thomas, L E	Lino Operator, Government of India Press	8, Hastings Street	ditto
	Thomas, M P	Assistant, Bird & Co	1-1, Clive Street	ditto
	Thomas, R A S	Assistant, J Thomas & Co	8, Mission Row	ditto
	Thomas, R Chilton	Assistant, Babcock & Wilcox, Ld	4, Bankshall Street	ditto
	Thomas, Robson Vivian	Sub-Accountant, Mercantile Bank of India, Ld	8, Clive Street	ditto
	Thomas, S	Assistant, Mackinnon, Mackenzie & Co	8, Strand Road	ditto
	Thompson, A W	Assistant, Mackinnon, Mackenzie & Co	8, Strand Road	ditto
	Thompson, E C A	Assistant, Price, Waterhouse, Peat & Co	B-4, Clive Buildings	ditto
	Thompson, G G C	Assistant, Burn & Co, Ld	12, Mission Row	ditto
	Thomson, C F	Assistant, W Haworth & Co	1, Commercial Buildings	ditto
	Thomson, F	Measurer, Bengal Chamber of Commerce	2, Clive Street	ditto

Thompson, N	Assistant, J Thomas & Co	8, Mission Row		ditto
Tiffany, W	Assistant, Kilburn & Co	4, Fairlie Place		ditto
Tobias, W A	Assistant, Jessop & Co, Ld	93, Clive Street		ditto
Tovey, G A C	Assistant, Birkmyre Bros	8, Clive Row		ditto
Tovey, Horace	Assistant, F W Heilgers & Co	1-1, Clive Street		ditto
Tredaway, G I	Assistant, J Thomas & Co	8, Mission Row		ditto
Tunks, L S S	Assistant, F W Heilgers & Co	1-1, Clive Street		ditto
Turner, J F A	Assistant, James Finlay & Co, Ld	1, Clive Street		ditto
Tyro, F	Assistant, Balmer, Lawrie & Co, Ld	103, Clive Street		ditto
U				
Uden, H T	Assistant, Hall & Anderson, Ld	31, Chowringhee		Christian
Unite, T G S	Assistant, Jardine, Skinner & Co	4, Clive Row		ditto
Upshon, Norman Wray	Assistant Master, St. Thomas School	58B, Free School Street		ditto
Urage, Victor Cecil	Assistant, T E Thomson & Co, Ld	9, Esplanade, East		ditto

No.	Names.	Style or calling.	Residence or place of business.	Religion.
	V			
	Vaillant, C A	Assistant, Begg Dunlop & Co, Ld	2, Hare Street	Christian
	Vallis, S C	Measurer, Bengal Chamber of Commerce	2, Clive Street	ditto
	Vandergucht, P J	Assistant, Balmer, Lawrie & Co, Ld	103, Clive Street	ditto
	Vandort, E A F	Measurer, Bengal Chamber of Commerce	2, Clive Street	ditto
	Vandort, G	Measurer, Bengal Chamber of Commerce	2, Clive Street	ditto
	Vandort, J A	Measurer, Bengal Chamber of Commerce	2, Clive Street	ditto
	Vanspall, Percy Richard Charles	Assistant, Cox & Kings (Agents), Ld	5, Bankshall Street	ditto
	Vaughan, N M	Assistant, Shaw, Wallace & Co	4, Bankshall Street	ditto
	Veal, Owen Lester	Assistant, George Waller & Co	29, Dalhousie Square	ditto
	Vernede, Jack Ronald	Accountant, Duncan Brothers & Co, Ld	101, Clive Street	ditto
	Vernieux, D S	Superintendent of Stores, Calcutta Tramways Co, Ld	7, Church Lane	ditto
	Vernieux, L E	Head Office Assistant, Calcutta Tramways Co, Ld	7, Church Lane	ditto
	Verona, J R	Measurer, Bengal Chamber of Commerce	2, Clive Street	ditto
	Verona, Leo	Assistant, Duncan Brothers & Co, Ld	101, Clive Street	ditto
	Vessey, S J	Assistant Manager, John Dewar & Sons, Ld	12, Hare Street	ditto
	Vickery, G	Catering Manager, Spencer & Co, Ld	32, Chowringhee	ditto

Vincent, Dennis	Salesman, Roneo, Ld	32-1, Dalhousie Square	ditto
Vincent, Lazarus Andrew	Assistant, Bengal Chamber of Commerce	2, Clive Street	ditto
Vincent, Reginald Josselyn	Assistant, Royal Calcutta Turf Club	11, Russell Street	ditto
Vincent, V J	Head Clerk, Income-tax Office	1, Hare Street	ditto
Violett, Q	Assistant, Standard Vacuum Oil Co	6, Church Lane	ditto
Vlasto, Jack John	Assistant, Ralli Brothers, Ld	16, Hare Street	ditto
Vyse, Theodore Alfred, BA	Assistant Master, St Thomas' School	58-B. Free School Street	ditto
Vyse, John Clarence, D'Souza	Assistant Master, La Martiniere School	11, Loudon Street	ditto

W

Walker, Albert William	Engineer, John Thompson (Wolverhampton), Ld	4, Fairlie Place	Christian
Walker, David	Assistant, North British & Mercantile Insurance Co, Ld	101-1, Clive Street	ditto
Walker, J	Permanent Way Assistant, Calcutta Tramways Co, Ld	7, Church Lane	ditto
Walker, James	Engineer, W & T Avery, Ld	11, Crooked Lane	ditto
Walker, J N	Assistant, Standard Vacuum Oil Co	6, Church Lane	ditto
Wallace, Archibald George	Assistant, Martin & Co	12, Mission Row	ditto
Wallace, Chas Ronald	Advertising Canvasser, *Statesman*, Ld	Statesman House	ditto
Wallace, Kenneth Edward	Assistant, Hoare Miller & Co, Ld	5, Fairlie Place	ditto
Wallace, Lawrence Russell, BSc (Lond)	Assistant Master, La Martiniere	11, Loudon Street	ditto
Wallace, Malcolm Jeffrys	Assistant, Macneill & Co	2, Fairlie Place	ditto

No.	Names.	Style or calling.	Residence or place of business.	Religion.
	Wallace, Robert	Sub-Accountant, Mercantile Bank of India, Ld	8, Clive Street	Christian
	Walsh, Harold St Clair	Assistant, Macneill & Co	2, Fairlie Place	ditto
	Walshe, D P	Measurer, Bengal Chamber of Commerce	2, Clive Street	ditto
	Walters, Jack Cecil	Assistant, Army & Navy Stores, Ld	41, Chowringhee	ditto
	Walton, J G	Assistant, Thomas Duff & Co, Ld	3, Clive Row	ditto
	Ward, J A	Assistant, Andrew Yule & Co, Ld	8, Clive Row	ditto
	Ward, W A	Assistant, J Thomas & Co	8, Mission Row	ditto
	Warwick, Stanley John	Salesman, Marshall Sons & Co (India), Ld	99, Clive Street	ditto
	Watson, A C	Assistant, H D Cartwright & Co	8, Clive Street	ditto
	Watson, Arthur Patrick	Assistant, Alfred Herbert (India), Ld	13-3, Strand Road	ditto
	Watson, J A	Assistant, Norwich Union Fire Insurance Society, Ld	8, Old Court House Street	ditto
	Watson, John Winning	Assistant, Planters' Stores & Agency Co, Ld	11, Clive Street	ditto
	Webb, Richard Martin	Assistant, Adair, Dutt & Co, Ld	5, Dalhousie Square	ditto
	Webster, N V H	Assistant, Turner, Morrison & Co, Ld	6, Lyons Range	ditto
	Webster, R O	Assistant, Balmer, Lawrie & Co, Ld	103, Clive Street	ditto
	Weingartner, George Anthony	Assistant, A Milton & Co, Ld	156, Dharamtala Street	ditto
	Weir, Cyril Sylvestre	Stenographer, Jewell Export Filter Co	10, Clive Street	ditto
	Weir, Eric Wilford	Assistant, T E Thomson & Co, Ld	9, Esplanade, East	ditto

Weldon-Church, Alexander Bertram	Assistant, Gillanders Arbuthnot & Co	8, Clive Street	ditto
Wells, C W	Measurer, Bengal Chamber of Commerce	2, Clive Street	ditto
Wells, H W	Assistant, Roberts, McLean & Co, Ld	101, Clive Street	ditto
West, E R	Sub-Accountant, Mercantile Bank of India, Ld	8, Clive Street	ditto
Westgarth, Spencer	Assistant, Whiteaway Laidlaw & Co, Ld	7, Chowringhee	ditto
Wheeler, Edwin Jones	Assistant, Army & Navy Stores, Ld	41, Chowringhee	ditto
Wheeler, H N	Assistant, I G N & Ry Co, Ld	4, Fairlie Place	ditto
Wheeler, William Ebeneza	Assistant, British Refrigerators	30, Chowringhee	ditto
Wheeler, William I T D Courcy	Assistant, Macneill & Co	2, Fairlie Place	ditto
White, A F P	Assistant, Volkart Bros	11, Clive Street	ditto
White, Arthur William	Assistant, Commercial Union Assurance Co, Ld	32, Dalhousie Square	ditto
White, J H	Assistant, F W Heilgers, & Co	1-1 Clive Street	ditto
Whitehead, J P	Assistant, F W Heilgers & Co	1-1, Clive Street	ditto
Whitehead, R B	Assistant, Turner Morrison & Co, Ld	6, Lyons Range	ditto
Whitlock, Edward	Mains Jointer, C E S C, Ld	Victoria House	ditto
Whitson, Harry H Adie	Acting Manager, Phipson & Co, Ld	1, Garstin Place	ditto
Whittaker, R	Engineer, W & T Avery, Ld	11, Crooked Lane	ditto
Whitworth, Robert John Eve	Assistant, Harrisons & Crosfield, Ld	6, Church Lane	ditto
Wilks, George Charles	Assistant, Mackenzie, Lyall & Co	5, Mission Row	ditto
Wilks, Patrick Sydney Arthur	Assistant, Lloyds Bank, Ld	37, Chowringhee	ditto
Williams, E J	Deputy Superintendent, Telegraphs, E B R	3, Kaylaghat Street	ditto

No.	Names.	Style or calling.	Residence or place of business.	Religion.
	Williams, Gilbert Daniel	Assistant, Cox & Kings (Agents), Ld	5, Bankshall Street	Christian
	Williams, J I	Assistant, I G N & Ry Co, Ld	4, Fairlie Place	ditto
	Williams, L E	Assistant, Hall & Anderson, Ld	31, Chowringhee	ditto
	Williams, P	Assistant, Thomas Duff & Co, Ld	3, Clive Row	ditto
	Williamson, C J	Reader, Calcutta General Printing Co, Ld	300, Bowbazar Street	ditto
	Williamson, J H	Assistant, Shaw Wallace & Co	4, Bankshall Street	ditto
	Willard, Frederick William	Assistant, Humayan Properties, Ld	1, Humayan Place	ditto
	Willis, Allen Harry Clarence	Assistant, Volkart Brothers	11, Clive Street	ditto
	Willis, Arthur Hamilton d'Anyers	Assistant, Place, Siddons & Gough	6, Lyons Range	ditto
	Willis, Guy Howard	Assistant, Roberts, McLean & Co, Ld	101, Clive Street	ditto
	Wilson, C D	Assistant, Balmer, Lawrie & Co, Ld	103, Clive Street	ditto
	Wilson, Ian Birrell	Assistant, Ford, Rhodes, Thornton & Co	Tower House	ditto
	Wilson, T	Assistant, Lionel Edwards, Ld	D1, Clive Buildings	ditto
	Wilson, William Alfred	Assistant, Bird & Co	1-1, Clive Street	ditto
	Wilton, Geoffrey, MA (Glas)	Assistant Master, LaMartiniere	11, Loudon Street	ditto
	Winder, Arthur Thomas	Assistant, W. T. Henley's Telegraph Works & Co, Ld	Old Court House Corner	ditto
	Wishart, Isaac	Assistant, Macneill & Co	2, Fairlie Place	ditto
	Wood, Arbuthnot	Assistant, F W Heilgers & Co	1-1, Clive Street	ditto

Wood, Herbert	Engineer, Chloride Electrical Storage Co, Ld	4, Lyons Range	ditto
Wood, Robert Anderson	Assistant Accountant, National Bank of India, Ld	104, Clive Street	ditto
Woodward, G C	Superintendent, Sir Stuart Hogg Market	Sir Stuart Hogg Market	ditto
Wright, Anderson	Salesman, Minimax, Ld	Mercantile Buildings	ditto
Wright, H W	Assistant, Lovelock & Lewes	4, Lyons Range	ditto
Wright, John Wyman, MA	Assistant Master, St Thomas' School	58-B, Free School Street	ditto

Y

Yapp, G F	Assistant, Mackinnon, Mackenzie & Co	8, Strand Road	Christian
Yeoman, A S B	Assistant, Turner Morrison & Co, Ld	6, Lyons Range	ditto
Young, George	Assistant, Paterson Engineering Co (India), Ld	2, Dalhousie Square	ditto
Young, G S	Assistant, Standard Life Assurance Co	32, Dalhousie Square	ditto
Young, P R	Assistant Superintendent, W & W Department, E I R	E I R House	ditto
Young, Reginald Lancelot	Assistant, Thos, Cook & Son, Ld	4, Dalhousie Square	ditto
Young, S	Assistant, Ocean Accident & Guarantee Corporation, Ld	32-1, Dalhousie Square, South	ditto
Young, T B D	Assistant, Geo Henderson & Co, Ld	101-1, Clive Street	ditto

Z

Zachariah, P G, MA	Assistant, Commercial Intelligence Department	1, Council House Street	Christian
Zorab, Arthur John Kars	Assistant, Burmah Shell Co of India, Ld	Hongkong House	Armenian
Zurita, Trevelyn Hayward	Measurer, Bengal Chamber of Commerce	2, Clive Street	Christian

No.	Names.	Style or calling.	Residence or place of business.	Religion.
	A			
	Abu, Osman Khalil	Lecturer, Calcutta University	Senate House	Mahomedan
	Acharya, Debendra Nath	Assistant, Macneill & Co	2, Fairlie Place	Hindu
	Acharya, G C., GDA	Assistant, S R Battliboi & Co	1-B, Old Post Office Street	ditto
	Acharya, Mahim Chandra	Clerk, D A-G, P & T Office	7, Koilaghat Street	ditto
	Acharya, Mani Mohan	Overseer, Executive Engineer's Office, City Division, P W D	Writers' Buildings	ditto
	Acharya, Manindra Nath, MSC	Laboratory Assistant, Zoological Survey of India	Indian Museum	ditto
	Acharya, Nishi Kumar, BSc (Hons).	Clerk, D A-G, P & T Office	7, Koilaghat Srteet	ditto
	Acharya, Ramrenu, MA, BT	Assistant Master, Hindu School	College Square	ditto
	Acharya, Satish Chandra	Assistant, A-G's Office, Bengal	Treasury Buildings	ditto
	Acharya, Surendra Nath	Assistant, Office of the Inspector-General of Police, Bengal	Writers' Buildings	ditto
	Adhikari, Krishna Chandra, BL	Accountant, Dy Accountant-General, Posts and Telegraphs Office	7, Koilaghat Street	ditto
	Adhikari, Mohini Mohan	Clerk, Traffic Department, E B R	3, Koilaghat Street	ditto
	Adhikari, Sanat Kumar	Clerk, D A-G, P & T Office	7, Koilaghat Street	ditto
	Adhya, Akhoy Kumar	Clerk, Martin & Co	12, Mission Row	ditto
	Adhya, Chandra Shekhar	Assistant, Burn & Co, Ld	12, Mission Row	ditto
	Adhya, Gopinath	Cashier, Harrisons & Crosfield, Ld	6, Church Lane	ditto

Adhya, Ishan Chandra ..	Clerk, Burmah Shell Co of India, Ld	Hongkong House	ditto
Adhya, Jatindra Nath ..	Assistant, Commercial Intelligence Department	1, Council House Street	ditto
Adhya, Jugal Kishore	Cashier, Geo Henderson & Co, Ld	101-1, Clive Street	ditto
Adhya, K C, MA	Director, Incorporated Insurance, Ld	33-1, Amherst Street	Christian
Adhya, Nagendra Nath	Assistant, Commercial Intelligence Department	1, Council House Street	Hindu
Adhya, Patitpaban	Assistant, Andrew Yule & Co, Ld	8, Clive Row	ditto
Adhya, Pramatha Nath	Clerk, Imperial Bank of India	3, Strand Road	ditto
Adhya, Shyam Sundar	Assistant, P & O Banking Corporation, Ld	1, Fairlie Place	ditto
Aditya, Surendra Nath	Salesman, Indian School Supply Depot	Chittaranjan Avenue, South	ditto
Ahmed, Aftabuddin (Maulvi)	Estimator, Hijli Division	Writers' Buildings	Mahomedan
Ahmed, Ahiduddin, MA	Inspector Surveyor, I T Office	3, Government Place, West	ditto
Ahmed, Anwaruddin (Maulvi)	Assistant, Bengal Secretariat, Police Department	Writers' Buildings	ditto
Ahmed, Asimuddin	Assistant, Office of the Director of Public Instruction, Bengal	Writers' Buildings	ditto
Ahmed, Basiruddin, BL	Assistant, A G's Office, Bengal	Treasury Buildings	ditto
Ahmed, Fariuddin	Assistant, Bengal Secretariat, P W D	Writers' Buildings	ditto
Ahmed, Golam, BA	Assessor, I T Office	3, Government Place, West	ditto
Ahmed, Golam	Assistant, Office of the Director of Public Instruction, Bengal	Writers' Buildings	ditto
Ahmed, Golam Mahiuddin	Clerk, Collector's Department, Calcutta Corporation	Municipal Office	ditto
Ahmed, Helaluddin (Maulvi)	Head Assistant, Office of the Registrar of Co-operative Societies, Bengal	Writers' Buildings	ditto

No.	Names.	Style or calling.	Residence or place of business.	Religion.
	Ahmed, Helaluddin	Assistant, Finance Department, Bengal Secretariat	Writers' Buildings	Mahomedan
	Ahmed, Khademuddin	Hd Clerk, Canals Division, P W D	Treasury Buildings	ditto
	Ahmed, Mahiuddin	Examiner of Accounts, I T Office	6, Esplanade, East	ditto
	Ahmed, Mumtazuddin	Assistant Maulvi, Calcutta Madrasah	19, Wellesley Square	ditto
	Ahmed, Muzaffar	Assistant, Office of the Inspector-General of Registration, Bengal	Writers' Buildings	ditto
	Ahmed, Nazir, MA	Lecturer, Islamia College	8, Wellesley Street	ditto
	Ahmed, Naziruddin	Clerk, Telegraph Check Office	33, Dalhousie Square South	ditto
	Ahmed, Qurban	Lighting Supervisor, Calcutta Corporation	Municipal Office	ditto
	Ahmed, Rafiuddin (Maulvi), BA	Assistant, Bengali Translator's Office	Writers' Buildings	ditto
	Ahmed, Rukunuddin (Maulvi), BA	Assistant, Bengal Secretariat Record Room	Writers' Buildings	ditto
	Ahmed, Sabiluddin	Clerk, Telegraph Check Office	33, Dalhousie Square, South	ditto
	Ahmed, Shah Moinuddin	Maulvi, Royal Asiatic Society of Bengal	1, Park Street	ditto
	Ahmed, Shamsheruddin	Clerk, Photo-Litho Branch, Surveyor-General's Office	14, Wood Street	ditto
	Ahmed, Sharafuddin, MA (Maulvi)	Lecturer, Islamia College	8, Wellesley Street	ditto
	Ahmed, Syed Morsheduddin (Maulvi), BA	Assistant, Bengal Secretariat, Appointment Department	Writers' Buildings	ditto
	Ahmed, Syed Nehal	Surveyor, Calcutta Improvement Trust	5, Clive Street	ditto
	Ahmed, Syed Wasi	Clerk, Engineer's Office, E B R	3, Koilaghat Street	ditto
	Ahmed, Syed Zahiruddin (Maulvi)	Sub-Inspector of Schools, Calcutta (Special)	40-1A, Free School Street	ditto

Ahmed, Tamizuddin	Assistant, Office of the Director of Public Instruction, Bengal	Writers' Buildings		ditto
Ahmed, Zainuddin	Clerk, Telegraph Check Office	33, Dalhousie Square, South		ditto
Aich, Pankajkumar	Assistant, Controller's Office, Calcutta University	Senate House		Hindu
Aiyar, K R K	Clerk, Shaw, Wallace & Co	4, Bankshall Street		ditto
Aiyar, T Krishnaswamy	Stenographer, Bengal Secretariat, Finance Department	Writers' Buildings		ditto
Aiyar, V Rangaswami	Head Clerk, Agent's Office, E B R	3, Kaylaghat Street		ditto
Akbar, Md Ali, BA	Assistant, Accountant-General's Office, Bengal	Treasury Buildings		Mahomedan
Alam, Abu Zafer Md	Inspector, License Department, Calcutta Corporation	Municipal Office		ditto
Alam, Mohammad Najmul, BA	Assistant, Central Stationery Office	3, Church Lane		ditto
Alam, Syed Md Badrul, BA	Lecturer, Ripon College	24, Harrison Road		ditto
Ali. A B M Magfur (Maulvi), BA	Assistant, Bengal Secretariat, Special Branch	Writers' Buildings		ditto
Ali, Akhtar (Syed)	Assistant Librarian, Presidency College	86-1, College Street		ditto
Ali, Anser (Maulvi), BA	Assistant, Bengal Secretariat, Appointment Department	Writers' Buildings		ditto
Ali, Asad Mahomed	Superintendent, C O P S Office	E I R House		ditto
Ali, Azam	Assistant, Commercial Intelligence Department	1, Council House Street		ditto
Ali, Azim	Clerk, C M E's Office, E I R	E I R House		ditto
Ali, Kazi Azahar, BL	Assistant, Legislative Department, Bengal	Council House		ditto
Ali, Ghanimat (Maulvi), BSC	Laboratory Assistant, Islamia College	8, Wellesley Street		ditto
Ali, Gholam, BA	Assistant, Bengal Secretariat, Finance Department	Writers' Buildings		ditto

No.	Names.	Style or calling.	Residence or place of business.	Religion.
	Ali, Hafez, BA	Assistant, Bengal Secretariat, Finance Department	Writers' Buildings	Mahomedan
	Ali, Jabed	Assistant Record-Keeper, Calcutta Corporation	Municipal Office	ditto
	Ali, Mahabat	Stenographer, Bengal Secretariat, Finance Department	Writers' Buildings	ditto
	Ali, Mahomed, MA	Lecturer, Ripon College	24, Harrison Road	ditto
	Ali, Mahomed	Clerk, C M O's Office, E I R	E I R House	ditto
	Ali, Mahomed Arab, MA	Assistant, Education Department, Bengal Secretariat	Writers' Buildings	ditto
	Ali, Mahomed Korban (Maulvi)	Assistant, Bengal Secretariat, L S-G Department	Writers' Buildings	ditto
	Ali, Mahomed Moksed	Assistant Master, Hare School	87, College Street	ditto
	Ali, Makbul, BA	Assistant, Accounts Department, Calcutta Corporation	Municipal Office	ditto
	Ali, Md Najib	Accountant, " Star of India "	3, Wellesley Place	ditto
	Ali, Md Sadat, BA	Clerk, D A G P & T Office	7, Koilaghat Street	ditto
	Ali, Md Yakub, BA	Clerk, Telegraph Check Office	33, Dalhousie Square, South	ditto
	Ali, M Torab, MA	Assistant, Accountant-General's Office, Bengal	Treasury Buildings	ditto
	Ali, Mukshed (Maulvi)	Assistant, Bengal Secretariat, Appointment Department	Writers' Buildings	ditto
	Ali, S Sikandar	Chief Accountant, Associated British Machine Tool Makers, Ld	6, Old Post Office Street	ditto
	Ali, Syed Hashim	Assistant, Bengal Secretariat, Revenue Department	Writers' Buildings	ditto
	Ali, Syed Sadat	Assessor, Income-tax Office	3, Government Place, West	ditto
	Ali, Syed Wahed	Assistant, Bengal Secretariat, Revenue Department	Writers' Buildings	ditto
	Amanatullah (Maulvi), BA	Assistant, Bengal Secretariat, Political (Jails) Department	Writers' Buildings	ditto

Ambani, Panachand Kapurchand	Supervisor, Jeewanlal (1929), Ld	101, Clive Street	Hindu
Amin, Muhammad Bin, BA	Personal Clerk to Deputy Ex Officer, Calcutta Corporation	Municipal Office	Mahomedan
Anam, Md Sharful, BA	Record Keeper, Calcutta Corporation	Municipal Office	ditto
Anand, C G, BA	Assistant, L S Daver & Co	1 & 2, Old Court House Corner	Hindu
Ansari, Maqbool Ahmed, BA	Apprentice, Eastern Federal Union Insurance Co, Ld	9, Clive Street	Mahomedan
Antia, Eduljee Rattanjee	Assistant, Burmah Shell Co of India, Ld	Hongkong House	Zoroastrian
Antia, Jehangir Sorabji	Salesman, Muller & Phipps (India), Ld	Avenue House, Chowringhee Square	ditto
Arnab, Satish Chandra	Assistant, P & O Banking Corporation, Ld	1, Fairlie Place	Hindu
Arora, Dina Nath	Auditor, Karam Chand Thapar & Bros, Ld	5, Royal Exchange Place	ditto
Arunachalam, T S, BA	Assistant, Commercial Intelligence Department, India	1, Council House Street	ditto
Asgar, Mahomed	Assistant Master, Calcutta Madrasah	19, Wellesley Square	Mahomedan
Ashan, Raghib	Sub-Editor, Star of India	3, Wellesley Place	ditto
Asthana, Srikrishna	Clerk, C A O's Office, E I R	E I R House	Hindu
Ayengar, Srinivas	Assistant, Jeewanlal (1929), Ld	101, Clive Street	ditto
Ayrton, S M	Assistant, Shaw Wallace & Co	4, Bankshall Street	Zoroastrian
Aziz, Md Abdul, BA	Assistant, Accountant-General's Office, Bengal	Treasury Buildings	Mahomedan
Azizuddin, Mahammad	Head Clerk, Calcutta Madrasah	19, Wellesley Square	ditto

B

Badiuzzaman, Sk (Maulvi)	Travelling Auditor, Office of the Inspector-General of Prisons, Bengal	Writers' Buildings	Mahomeda

No.	Names.	Style or calling.	Residence or place of business.	Religion.
	Badiuzzaman, Maulvi, MSc	Assistant Analyst, Bengal Public Health Laboratory	Chittaranjan Avenue	Mahomedan
	Bagchi, Ashutos	Assistant, Controller's Office, Calcutta University	Senate House	Hindu
	Bagchi, Bibhuti Bhusan	Clerk, Shaw, Wallace & Co	4, Bankshall Street	ditto
	Bagchi, Girija Shankar	S A Superintendent, Drawing Branch, Surveyor-General's Office	13, Wood Street	ditto
	Bagchi, Pravas Chandra	Chief Clerk, Bill Section, C E S C, Ld	Victoria House	ditto
	Bagchi, Rabindra Nath	Clerk, Telegraph Check Office	33, Dalhousie Square, South	ditto
	Bagchi, Shailendra Nath	Clerk, D A G P & T Office	7, Koilaghat Street	ditto
	Bagchi, Shib Nath, BSc	Stenographer, Bengal Secretariat, Finance Department	Writers' Buildings	ditto
	Bagchi, Sushil Kumar	Clerk, D A G P & T Office	7, Koilaghat Street	ditto
	Bahadur, Shamsher	Sub-Head, C A O's Office, E I R	E I R House	ditto
	Baksh, Nabi	Clerk, C O P S Office, E I R	E I R House	Mahomedan
	Bakshi, Abhaya Pada	Clerk, Shaw, Wallace & Co	4, Bankshall Street	Hindu
	Bakshi, Dakshinaranjan	Clerk, Operating Department, E I R	E I R House	ditto
	Bakshi, Lal Mohan	Clerk, Telegraph Check Office	33, Dalhousie Square, South	ditto
	Bakshi, Purna Chandra	Stenographer, Standard Literature Co, Ld	13-1, Old Court House Street	ditto
	Bakshi, Santos Chandra	Clerk, C A O's Office, E I R	E I R House	ditto
	Bakshi, Saroj Kumar	Assistant, North British & Mercantile Insurance Co, Ld	101-1, Clive Street	ditto
	Bakshi, Satish Chandra	Clerk, Agent's Office, E I R	E I R House	ditto

Bala Krishnam, P V	Clerk, Remington Rand Inc	3, Council House Street	ditto
Balial, Radhikaprasad	Clerk, Agent's Office, E I R	E I R House	ditto
Banarji, A, BA	Assistant, Art Press	20, British Indian Street	ditto
Banarji, A K	Salesman, Dunlop Rubber Co (India), Ld	42, Free School Street	ditto
Banarji, A K	Assistant Engineer, G E C (India), Ld	Magnet House, Chittaranjan Avenue, South.	ditto
Banarji, Akshaya Kumar	Assistant, Office of the Commissioner of Income-tax	Imperial Secretariat Buildings	ditto
Banarji, Amarendra Nath	Clerk, D A G P & T Office	7, Koilaghat Street	ditto
Banarji, Amarendra Nath, MA	Assistant, A G's Office, Bengal	Treasury Buildings	ditto
Banarji, Amarnath	Head Assistant, Standard Literature Co, Ld	13-1, Old Court House Street	ditto
Banarji, Amarnath	Clerk, C O P S Office, E I R	E I R House	ditto
Banarji, Amrita Lal	Clerk, Acctts Deptt, Imperial Bank of India	Strand Road	ditto
Banarji, Amrita Lal	Assistant, Macneill & Co	2, Fairlie Place	ditto
Banarji, Amrita Lal	Assistant, Bengal Chemical & Pharmaceutical Works, Ld	31, Chittaranjan Avenue, South	ditto
Banarji, Amulya Mohan	Clerk, D A G P & T Office	7, Koilaghat Street	ditto
Banarji, Anadi Nath	Clerk, Gillanders, Arbuthnot & Co	8, Clive Street	ditto
Banarji, Ananta Deb	Assistant, Accountant-General's Office, Bengal	Treasury Buildings	ditto
Banarji, Anil Chandra, BA	Assistant, Accountant-General's Office, Bengal	Treasury Buildings	ditto
Banarji, Anil Krishna	L G S Officer, E I R	E I R House	ditto
Banarji, Anil Kumar	Clerk, Imperial Bank of India	3, Strand Road	ditto

No.	Names.	Style or calling.	Residence or place of business.	Religion.
	Banarji, Anil Kumar	Assistant, Kodak, Ld	17, Park Street	Hindu
	Banarji, Apurba K, BA	Clerk, D A G P & T Office	7, Koilaghat Street	ditto
	Banarji, Arun Chandra	Clerk, Harrisons & Crosfield, Ld	6, Church Lane	ditto
	Banarji, Arun Chandra	Superintendent, C R E's Office, Elec & Mech, P and A District.	Fort William	ditto
	Banarji, Ashutos, BA	Head Clerk, Botanical Survey of India	Indian Museum	ditto
	Banarji, Ashutos	Clerk, Mackinnon Mackenzie & Co	16, Strand Road	ditto
	Banarji, Asita Mohan	Assistant, Calcutta University	Senate House	ditto
	Banarji, Atul Chandra	Assistant, Senda & Co (India), Ld	135, Canning Street	ditto
	Banarji, Bacharam	Clerk, I G N & Ry Co, Ld	Nimtollah	ditto
	Banarji, Bagalapada, BA	Assistant, Accountant-General's Office, Bengal	Treasury Buildings	ditto
	Banarji, Baidya Nath	Clerk, D A G P & T Office	7, Koilaghat Street	ditto
	Banarji, Banku Bihari	Clerk, Central Registry, E I R	E I R House	ditto
	Banarji, Balaidas	Assistant, Accounts Department, Calcutta Corporation	Municipal Office	ditto
	Banarji, Basanta Kumar	Assistant, Controller's Office, Calcutta University	Senate House	ditto
	Banarji, Basanta Kumar	Assistant, Reserve Bank of India	8, Council House Street	ditto
	Banarji, Basanta Kumar	Clerk, C O P S Office, E I R	E I R House	ditto
	Banarji, Basanta Lal	Assistant, Burn & Co, Ld	12, Mission Row	ditto
	Banarji, B B	Assistant, All India Radio	1, Garstin Place	ditto

Banarji, Benoy Krishna, BSc	Clerk, D A G P & T Office	7, Koilaghat Street	ditto
Banarji, Bepin Behary	Clerk, Shaw Wallace & Co	4, Bankshall Street	ditto
Banarji, Bholadas, BA	Assessment Clerk, Assessor's Department, Calcutta Corporation	Municipal Office	ditto
Banarji, Bholanath	Clerk, C O P S Office, E I R	E I R House	ditto
Banarji, Bholanath	Clerk, Telegraph Check Office	33, Dalhousie Square, South	ditto
Banarji, Bhuban Mohan	Cashier, Explosives Office	1, Council House Street	ditto
Banarji, Bhudeb Ch	Head Clerk, Stores Department, E B R	3, Koilaghat Street	ditto
Banarji, Bhujanga Bhusan, BA	Technical Assistant, All India Radio	1, Garstin Place	ditto
Banarji, Bhupati	Assistant, Controller of Stores Department, Calcutta Corporation	30-1, Beadon Row	ditto
Banarji, Bhupati Nath	Assistant, Accountant-General's Office, Bengal	Treasury Buildings	ditto
Banarji, Bhupati Nath	Assistant, Macneill & Co	2, Fairlie Place	ditto
Banarji, Bhupendra Lal	Assistant, Calcutta University	Senate House	ditto
Banarji, Bhupendra Nath	2nd clerk, Presidency College	86-1, College Street	ditto
Banarji, Bibhuti Bhusan	Clerk, E B R	3, Koilaghat Street	ditto
Banarji, Bibhuti Bhusan	Clerk, D A G P & T Office	7, Koilaghat Street	ditto
Banarji, Bibhuti Bhusan	Clerk, Post-Audit, Port Commissioners' Office	Strand Road	ditto
Banarji, Bibhuti Bhusan	Reader, Government of India Press	8, Hastings Street	ditto
Banarji, Bibhuti Bhusan	Clerk, D A G P & T Office	7, Koilaghat Street	ditto
Banarji, Bidyut Kumar, BA	Inspector Surveyor, Income-tax Office	3, Government Place, West	ditto

No	Names.	Style or calling	Residence or place of business.	Religion.
	Banarji, Bijaya Bhusan BA	Clerk, D A G P & T Office	7, Koilaghat Street	Hindu
	Banarji, Bijaya Gopal	Assistant, Andrew Yule & Co, Ld	8, Clive Row	ditto
	Banarji, Bijaya K	Assistant, Andrew Yule & Co, Ld	8, Clive Row	ditto
	Banarji, Bijaya K	Assistant, Balmer, Lawrie & Co, Ld	103, Clive Street	ditto
	Banarji, Bijaya Krishna	Clerk, Burmah Shell Co of India, Ld	Hongkong House	ditto
	Banarji, Bijaya Kumar	Estimator, P H D, Bengal	3, Charnock Place	ditto
	Banarji, Bijaya Kumar	2nd Assistant, Supdtg Engineer's Office, Electrical Circle, Bengal	Writers' Buildings	ditto
	Banarji, Bijaya Kumar, MA	Accountant, Government of India Press	8, Hastings Street	ditto
	Banarji, Bimala Charan, BA	Clerk, Chief Auditor's Office, E I R	E I R House	ditto
	Banarji, Bipra Das, BA	Clerk, D A G P & T Office	7, Koilaghat Street	ditto
	Banarji, Birendra Mohan, BCom	Clerk, D A G P & T Office	7, Koilaghat Street	ditto
	Banarji, Biswanath, MSc	Assistant Librarian, Calcutta University	Senate House	ditto
	Banarji, B K	Clerk, Heatly & Gresham, Ld	6, Waterloo Street	ditto
	Banarji, B K	Accountant, Henry Maddeson, Ld	Mercantile Buildings	ditto
	Banarji, Bon Behari	Clerk, Chief Auditor's Office, E I R	E I R House	ditto
	Banarji, Brajendra Nath	Assistant, Accounts Dept, Calcutta Corporation	Municipal Office	ditto
	Banarji, Chandi Charan	Assistant, Reserve Bank of India	8, Council House Street	ditto
	Banarji, Chandi Charan	Assistant, James Finlay & Co, Ld	1, Clive Street	ditto
	Banarji, Chandra Bhusan	Clerk, Martin & Co	12, Mission Row	ditto

Banarji, Charu Chandra ..	Head Computor, Government of India Press ..	8, Hastings Street ..	ditto
Banarji, Dasarathi ..	Accounts Clerk, Calcutta Improvement Trust ..	5, Clive Street ..	ditto
Banarji, Debanga Nath ..	Assistant, Accountant-General's Office, Bengal ..	Treasury Buildings ..	ditto
Banarji, Debendra Nath ..	Assistant, Office of the Inspector-General of Police, Bengal ..	Writers' Buildings ..	ditto
Banarji, Debendra Nath	Head Clerk, Traffic Department, E B R ..	3, Kaylaghat Street ..	ditto
Banarji, Debgati ..	Assistant, Income-tax Office	6, Esplanade, East ..	ditto
Banarji, Dhirendra Kumar, BA	Stenographer, C E's Office, Calcutta Corporation] ..	Municipal Office ..	ditto
Banarji, Dhirendra Nath	Clerk, *Statesman*, Ld	Statesman House ..	ditto
Banarji, Dhirendra Nath	Assistant, Accountant-General's Office, Bengal ..	Treasury Buildings ..	ditto
Banarji, Dhirendra Nath, BSc	Sub-Inspector, License Department, Calcutta Corporation	Municipal Office ..	ditto
Banarji, Dhirendra Nath	Assistant, Bird & Co	1-1, Clive Street ..	ditto
Banarji, Dulal Chandra ..	Assistant, Calcutta Collectorate	3, Charnock Place ..	ditto
Banarji, Durgadas ..	Clerk, Secretary's Department, Port Commissioners' Office	Strand Road ..	ditto
Banarji, Durga Prasad ..	Assistant, Accountant-General's Office, Bengal ..	Treasury Buildings ..	ditto
Banarji, Dwijendra Nath, BA	Assistant, Board of Revenue, Bengal	Writers' Buildings ..	ditto
Banarji, Ekkari ..	Clerk, Collector's Department, Calcutta Corporation	Municipal Office ..	ditto
Banarji, Fani Bhusan ..	Stenographer, Burmah Shell Co of India, Ld ..	Hongkong House ..	ditto
Banarji, Fanibhusan ..	Assistant, J Thomas & Co	8, Mission Row ..	ditto
Banarji, Gangananda ..	Assistant, Accountant-General's Office, Bengal ..	Treasury Buildings ..	ditto

No.	Names.	Style or calling.	Residence or place of business.	Religion.
	Banarji, Girija Bhusan	Head Clerk, Saturday Club	7, Wood Street	Hindu
	Banarji, Girija Nath	Reader, Government of India Press	8, Hastings Street	ditto
	Banarji, Girindra Nath	Assistant, Public Health Department, Bengal	Writers' Buildings	ditto
	Banarji, Girindra Nath	Assistant, Army & Navy Stores, Ld	41, Chowringhee	ditto
	Banarji, Girindra Nath	Assistant, Planters' Stores & Agency Co, Ld	11, Clive Street	ditto
	Banarji, Gobin Chandra	Head Clerk, Accident Department, New Zealand Insurance Co, Ld	26, Dalhousie Square	ditto
	Banarji, Gobinda Chandra	Cashier, Octavius Steel & Co, Ld	14, Old Court House Street	ditto
	Banarji, Gobinda Lal, BSc	Assistant, Accountant-General's Office, Bengal	Treasury Buildings	ditto
	Banarji, Gopal Chandra	Overseer, P H D, Bengal	3, Charnock Place	ditto
	Banarji, Gopal Chandra	Assistant, Bengal Secretariat, Finance Department	Writers' Buildings	ditto
	Banarji, Gopi Krishna	Clerk, Telegraph Check Office	33, Dalhousie Square, South	ditto
	Banarji, Gorachand, BE, CE	Assistant, Holmes Wilson & Co, Ld	Norton Buildings	ditto
	Banarji, Gurudas, MA	Assistant, Reserve Bank of India	8, Council House Street	ditto
	Banarji, Gurupada	Assistant, Mackinnon, Mackenzie & Co	16, Strand Road	ditto
	Banarji, Haran Chandra	Stenographer, C E E's Office, E I R	E I R House	ditto
	Banarji, Harashit Chandra, BA	Sales Manager, Bengal Luxmi Soap Works	28, Pollock Street	ditto
	Banarji, Harendra Nath, BA	Head Assistant (Establishment), Calcutta Corporation	Municipal Office	ditto
	Banarji, Harendra Nath, BA	Assistant, Accountant-General's Office, Bengal	Treasury Buildings	ditto
	Banarji, Harendra Nath	Clerk, Office of the Chief Mining Engineer, Railway Board	1, Council House Street	ditto

Banarji, Harendra Nath	Assistant, Central Forms Stores	166, Dharamtala Street		ditto
Banarji, Hari Bhusan	Assistant, Surgeon-General's Office, Bengal	Writers' Buildings		ditto
Banarji, Hari Charan	Assistant, Octavius Steel & Co, Ld	14, Old Court House Street		ditto
Banarji, Haridas	Clerk. Central Stationery Store	3, Church Lane		ditto
Banarji, Haridas	Clerk, Post Audit, Port Commissioners' Office	Strand Road		ditto
Banarji, Haridas	Assistant, Bengal Chamber of Commerce	2, Clive Street		ditto
Banarji, Haridhan	Clerk, Brooke Bond (India), Ld	2, Metcalfe Street		ditto
Banarji, Hari Gopal	Assistant, Andrew Yule & Co, Ld	8, Clive Row		ditto
Banarji, Harihar	Clerk, Shaw, Wallace & Co	4, Bankshall Street		ditto
Banarji, Harihar	Clerk, Burmah Shell Co of India, Ld	Hongkong House		ditto
Banarji, Harikumar, MA	Assistant, Bengal Secretariat Record Room	Writers' Buildings		ditto
Banarji, Harimaya	Assistant Record-keeper, Improvement Trust Tribunal	6, Hastings Street		ditto
Banarji, Harimohan, MA	Audit Clerk, E B R	3 Kaylaghat Street		ditto
Banarji, Harimohan	Assistant, Royal Calcutta Turf Club	11, Russell Street		ditto
Banarji, Hari Nath	Accountant, Talbot & Co	Tower House		ditto
Banarji, Haripada	Clerk, W & W Department, E I R	E I R House		ditto
Banarji, Hari Pada	Wages Clerk, Bengal Telephone Corporation, Ld	8, Hare Street		ditto
Banarji, Haripada	Assistant, Bengal Chamber of Commerce	2, Clive Street		ditto
Banarji, Haripada	Head Clerk, Stores Department, E B R	3, Koilaghat Street		ditto

No.	Names	Style or calling.	Residence or place of business.	Religion.
	Banarji, Hariprakas	Clerk, D A G P & T Office	7, Koilaghat Street	Hindu
	Banarji, Hari Sadhan	Record-keeper, Improvement Trust Tribunal	6, Hastings Street	ditto
	Banarji, Hari Saran	Head Clerk, Traffic Department, E B R	3, Koilaghat Street	ditto
	Banarji, Jadupati, MA, BT	Assistant Master, Sanskrit Collegiate School	College Square	ditto
	Banarji, Janaki Nath, MA	Assistant, Calcutta University	Senate House	ditto
	Banarji, Jatindra Mohan	Assistant Master, Hare School	87, College Street	ditto
	Banarji, Jatindra Mohan, BA	Assistant, Office of the Controller of Currency	Treasury Buildings	ditto
	Banarji, Jatindra Nath	Clerk, Shaw, Wallace & Co	4, Bankshall Street	ditto
	Banarji, Jatish Chandra	Clerk, Calcutta Improvement Trust	5, Clive Street	ditto
	Banarji, Jiban Krishna	Head Assistant, Factory Inspection Department	40-1A, Free School Street	ditto
	Banarji, Jiten Kumar	Stenographer, Harrisons & Crosfield, Ld	6, Church Lane	ditto
	Banarji, Jitendra Nath, BA	Food Inspector, Calcutta Corporation	22, Mirzapore Street	ditto
	Banarji, Jitendra Nath	Draftsman (Drawing), Survey of India	13, Wood Street	ditto
	Banarji, Jitendra Nath	Overseer, Western Electrical Division	Writers' Buildings	ditto
	Banarji, Jitendra Nath	Assistant, Accountant-General's Office, Bengal	Treasury Buildings	ditto
	Banarji, Jitendra Nath	Assistant, Andrew Yule & Co, Ld	8, Clive Row	ditto
	Banarji, Jitendra Nath	Clerk, D A G P & T Office	7, Koilaghat Street	ditto
	Banarji, J N, BL	Clerk, C A O's Office, E I R	E I R House	ditto
	Banarji, J N	Assistant, Burn & Co, Ld	12, Mission Row	ditto

Banarji, Jnanendra Nath	Divisional Accountant, A-G's Office, Bengal	Treasury Buildings	ditto
Banarji, Jnanendra Nath, BA	Assistant, Central Stationery Office	3, Church Lane	ditto
Banarji, Jogendra Nath, BSc	Asstt Analyst, Bengal Public Health Laboratory	Chittaranjan Avenue	ditto
Banarji, Jogendra Nath	Offg Manager, Walworth International Co	14-2, Clive Row	ditto
Banarji, Jogesh Chandra, BA	Assistant, Commercial Intelligence Deptt, India	1, Council House Street	ditto
Banarji, Jogesh Chandra	Clerk, Ralli Bros, Ld	16, Hare Street	ditto
Banarji Jogeshwar	Clerk, Alliance Assurance Co, Ld	2, Hare Street	ditto
Banarji, Juran Chandra	Assistant, Central Stationery Office	3, Church Lane	ditto
Banarji, Jyotish Chandra	Clerk, Imperial Bank of India	3, Strand Road	ditto
Banarji, Jyotish Chandra	Assistant, European Association	6, Royal Exchange Place	ditto
Banarji, Kala Sashi	Assistant, Balmer Lawrie & Co, Ld	103, Clive Street	ditto
Banarji, Kali Charan	Clerk, C A O's Office, E I R	E I R House	ditto
Banarji, Kalidas	Clerk, Secretary's Department, Port Commissioners' Office	Strand Road	ditto
Banarji, Kalidas	Food Inspector, Calcutta Corporation	22, Mirzapore Street	ditto
Banarji, Kaliprasad, BA	Assistant, Accountant-General's Office, Bengal	Treasury Buildings	ditto
Banarji, Kamal Kr	Clerk, D A G P & T Office	7, Koilaghat Street	ditto
Banarji, Kanai Lall	Clerk, Calcutta Tramways Co, Ld	7, Church Lane	ditto
Banarji, Kanakendra Narayan, MSc	Examiner of Accounts, I T Office	3, Government Place, West	ditto
Banarji, Kanti Gopal	Demonstrator, Presidency College	86-1, College Street	ditto

No.	Names.	Style or calling.	Residence or place of business.	Religion.
	Banarji, Kapil Chandra	Clerk, C A O's Office, E I R	E I R House	Hindu
	Banarji, Karunakinkar, BA, BT	Assistant Master, Hindu School	College Square	ditto
	Banarji, Karunamaya	Assistant, Bird & Co	1-1, Clive Street	ditto
	Banarji, Khagendra Nath	Clerk, Burmah Shell Co of India, Ld	Hongkong House	ditto
	Banarji, Kiriti Bhusan	Assistant, Accountant-General's Office, Bengal	Treasury Buildings	ditto
	Banarji, Kishori Mohan	Assistant, The Apcar Collieries, Ld	2, Fairlie Place	ditto
	Banarji, Krishna Das	Assistant, Accountant-General's Office, Bengal	Treasury Buildings	ditto
	Banarji, Krishnadhan	Head Clerk, Traffic Department, E B R	3, Koilaghat Street	ditto
	Banarji, Krishnaprasad	Assistant, Hoare Miller & Co	5, Fairlie Place	ditto
	Banarji, Kshetradas	Accounts Clerk, C E's Office, E I R	E I R House	ditto
	Banarji, Kshetra N	Assistant, F W Heilgers & Co	1-1, Clive Street	ditto
	Banarji, Kshitish Chandra	R W B, E B R	3, Kaylaghat Street	ditto
	Banarji, Kshitish Chandra	Head Clerk & Accountant, Krupp Indian Trading Co, Ld	22, Canning Street	ditto
	Banarji, Kuber Chandra	Inspector, Imperial Chemical Industries (India), Ld	18, Strand Road	ditto
	Banarji, Kulada Bhusan	Clerk, Telegraph Check Office	33, Dalhousie Square, South	ditto
	Banarji, Lal Mohan	Assistant, A-G's Office, Bengal	Treasury Buildings	ditto
	Banarji, Lal Mohan	Accountant, James Luke & Sons	7, Royal Exchange Place	ditto
	Banarji, Lal Mohan	Clerk, Telegraph Check Office	33, Dalhousie Square, South	ditto
	Banarji, L M	Salesman, G E C (India), Ld	Magnet House, Chittaranjan Avenue, South.	ditto

Banarji, Madhusudan	Assistant, Bengal Secretariat, L S-G Department	Writers' Buildings	ditto
Banarji, Makhan Lal	Assistant, North British & Mercantile Insurance Co, Ld	101-1, Clive Street	ditto
Banarji, Manamohan	Clerk, D A G P & T Office	7, Koilaghat Street	ditto
Banarji, Manamohan	Head Assistant, Superintending Engineer's Office, Electrical Circle, Bengal	Writers' Buildings	ditto
Banarji, Manamohan	Assistant, Controller's Office, Calcutta University	Senate House	ditto
Banarji, Manas Nath, MA	Manager, Sooresh Chandra Mookerjee & Co	11, Raja Woodmunt Street	ditto
Banarji, Manatosh MSc	Assistant, Commercial Intelligence Department	1, Council House Street	ditto
Banarji, Manick Mohan	Clerk, Telegraph Check Office	33, Dalhousie Square, South	ditto
Banarji, Mani Lal	Clerk, D A G P & T Office	7, Koilaghat Street	ditto
Banarji, Manindra Lal	Head Clerk, Imperial Library	6, Esplanade, East	ditto
Banarji, Maniadra Nath	Sub-Head, C A O's Office, E I R	E I R House	ditto
Banarji, Manindra Nath	Clerk, Shaw Wallace & Co	4, Bankshall Street	ditto
Banarji, Manindra Nath	Chief Clerk, American Foreign Insurance Association	8, Clive Street	ditto
Banarji, Manmatha Nath	Clerk, Gillanders, Arbuthnot & Co	8, Clive Street	ditto
Banarji, Manmatha Nath	Clerk, C A O's Office, E I R	E I R House	ditto
Banarji, Manmatha Nath	Assistant, Bird & Co	1-1, Clive Street	ditto
Banarji, Manmatha Nath	Clerk, Calcutta Improvement Trust	5, Clive Street	ditto
Banarji, Manmatha Nath	Cashier, R B Rodda & Co	2, Wellesley Place	ditto
Banarji, M N	Accounts Clerk, Sulzer Brothers	4, Lyons Range	ditto

No.	Names.	Style or calling	Residence or place of business.	Religion.
	Banarji, Mohit Mohan ..	.. Assistant, Education Department, Bengal Secretariat	.. Writers' Buildings ..	.. Hindu
	Banarji, Mukteshwar ..	.. Head Draftsman, Engineer's Office, E B R ..	.. 3, Kaylaghat Street ..	.. ditto
	Banarji, Murali Bhusan, BSc	.. Assessing Inspector, Calcutta Corporation ..	.. Municipal Office ..	.. ditto
	Banarji, Murari Mohan	.. Clerk Burmah Shell Co. of India, Ltd ..	.. Hongkong House ..	.. ditto
	Banarji, N ..	.. Assistant, Barry & Co .. .	.. 2, Fairlie Place ..	.. ditto
	Banarji, N ..	.. Clerk, Heatly & Gresham, Ld	.. 6, Waterloo Street ..	.. ditto
	Banarji, N ..	.. Head Clerk, Medical Department, E B R ..	.. 3, Kaylaghat Street ..	.. ditto
	Banarji, Nabani Lall ..	. Head Clerk, G F Playfair & Co	.. 27-7, Waterloo Street ..	.. ditto
	Banarji, Nagendra Nath	.. Clerk, Martin & Co	.. 12, Mission Row ..	.. ditto
	Banarji, Nagendra Nath ..	.. Assistant, Mackinnon, Mackenzie & Co	.. 16, Strand Road ..	.. ditto
	Banarji, Nagendra Nath	.. Stenographer, Bengal Secretariat, Finance Department	.. Writers' Buildings ..	.. ditto
	Bonarji Nakul Chandra	.. Assistant, Accounts Department, Calcutta Corporation	.. Municipal Office ..	.. ditto
	Banarji, Nakuleshwar ..	.. Clerk, Jardine, Skinner & Co	.. 4, Clive Row ..	.. ditto
	Banarji, Nakuleshwar ..	.. Assistant, A G's Office, Bengal	.. Treasury Buildings ..	ditto
	Banarji, Nakur Krishna ..	.. Clerk, Calcutta Stock Exchange Assen, Ld ..	.. 7, Lyons Range ..	.. ditto
	Banarji, Nalkanto ..	.. Accountant, C A O's Office, E I R	.. E I R House ..	.. ditto
	Banarji, Nalini Kanta ..	.. Clerk, Turner, Morrison & Co, Ld	.. 6, Lyons Range ..	.. ditto

Banarji, Nalini Kanta	Clerk, Agent's Office, E B R	3, Kaylaghat Street	ditto
Banarji, Nanda Lal	Assistant, Begg Dunlop & Co, Ld	2, Hare Street	ditto
Banarji, Nani Gopal	Assistant, Patent Office	1, Council House Street	ditto
Banarji, Nani Gopal	Clerk, Gillanders, Arbuthnot & Co	8, Clive Street	ditto
Banarji, Narayan Chandra	Assistant, Andrew Yule & Co, Ld	8, Clive Row	ditto
Banarji, Narayan Chandra	Clerk, Place Siddons & Gough	6, Lyons Range	ditto
Banarji, Narendra Nath	Head Assistant, Office of the Commissioner of Income-tax	Imperial Secretariat Buildings	ditto
Banarji, Narendra Nath	Clerk, Office of the Chief Mining Engineer, Railway Board	1, Council House Street	ditto
Banarji, Narendra Nath	Assistant, Ludlow Jute Co, Ld	7, Royal Exchange Place	ditto
Banarji, Narendra Nath	Assistant, Bird & Co	1-1, Clive Street	ditto
Banarji, Narendra Nath	Assistant, T E Bevan & Co, Ld	Grosvenor House	ditto
Banarji, Narendra Nath	Assistant Treasurer, Calcutta Tramways Co, Ltd	7, Church Lane	ditto
Banarji. Naresh Chandra	Nazir, Calcutta Collectorate	3, Charnock Place	ditto
Banarji, Nikhil Bhusan	Assistant, Accountant-General's Office, Bengal	Treasury Buildings	ditto
Banarji, Nilambar	Assistant, Bengal Chamber of Commerce	2, Clive Street	ditto
Banarji, Nirad Krishna, MA	Assistant, Accountant-General's Office, Bengal	Treasury Buildings	ditto
Banarji, Nirmal Chandra, BA	Assistant, Central Stationery Office	3, Church Lane	ditto
Banarji, Nirmal Chandra	Clerk, D A G P & T Office	7, Koilaghat Street	ditto

No.	Names.	Style or calling.	Residence or place of business.	Religion.
	Banarji, Nirmal K	Rent Collector, Calcutta Improvement Trust	5, Clive Street	Hindu
	Banarji, N N	Cashier, Remington Rand, Inc	3, Council House Street	ditto
	Banarji, Nripendra Chandra, BA	Assistant, Accountant-General's Office, Bengal	Treasury Buildings	ditto
	Banarji, Nripendra Lal	Assistant, Calcutta University	Senate House	ditto
	Banarji, Nripendra Nath	Cashier, Landale & Clark, Ld	11, Clive Street	ditto
	Banarji, Nripendra Nath	Clerk, Gillanders Arbuthnot & Co	8, Clive Street	ditto
	Banarji, Nutbihari	Assistant, Mackinnon, Mackenzie & Co	16, Strand Road	ditto
	Banarji, Panchanan, MA	Assessment Clerk, Assessor's Department, Calcutta Corporation	Municipal Office	ditto
	Banarji, Panchanan	Assistant, Accountant-General's Office, Bengal	Treasury Buildings	ditto
	Banarji, Panchanan, BA	Clerk, D A G P & T Office	7, Koilaghat Street	ditto
	Banarji, Panchanan	Assistant, Commercial Intelligence Department	1, Council House Street	ditto
	Banarji, Panchu Charan	Head Clerk, Mechl Department, E B R	3, Kaylaghat Street	ditto
	Banarji, Pankaj Kumar, BSc	Clerk, D A G P & T Office	7, Koilaghat Street	ditto
	Banarji, Pannalal	Assistant, Bird & Co	1-1, Clive Street	ditto
	Banarji, Pannalal	Assistant, Mackinnon Mackenzie & Co	16, Strand Road	ditto
	Banarji, Paresh Nath	Assistant, Accounts Department, Calcutta Corporation	Municipal Office	ditto
	Banarji, Pashupati, MA	Clerk, D A G P & T Office	7, Koilaghat Street	ditto

Banarji, Pataki Charan, MA	Clerk, D A G P & T Office	7, Koilaghat Street		ditto
Banarji, Patit Paban	Clerk, Burmah Shell Co of India, Ld	Hongkong House		ditto
Banarji, P G	Clerk, Heatly & Gresham, Ltd	6, Waterloo Street		ditto
Banarji, Phani Bhusan	Assistant, Butterworth & Co (India), Ld	Chowringee Square		ditto
Banarji, Phanindra Nath	Clerk, D A G P & T Office	7, Koilaghat Street		ditto
Banarji, Phanindra Nath	Clerk, Imperial Bank of India	3, Strand Road		ditto
Banarji, Prabodh Chandra	Steno-typist, Liverpool & London and Globe Insurance Co. Ld	26, Dalhousie Square		ditto
Banarji, Prafulla Ch	Assistant Accountant, Calcutta Corporation	79, Cornwallis Street		ditto
Banarji, Prafulla Chandra	Assistant, Bengal Secretariat, L S-G Department	Writers' Buildings		ditto
Banarji, Prafulla Charan (No I)	Clerk, Accountant-General's Office, Bengal	Treasury Buildings		ditto
Banarji, Prafulla Charan (No II), BA	Assistant, Accountant-General's Office, Bengal	Treasury Buildings		ditto
Banarji, Prafulla Kumar (No I)	Clerk, Stationery Stores (Central)	3, Church Lane		ditto
Banarji, Prakash Chandra, BA	Assistant, Calcutta University	Senate House		ditto
Banarji, Prakash Chandra	Clerk, R Sim & Co, Ld	2, Clive Row		ditto
Banarji, Pramath Nath, MA	Assistant, Bengali Translator's office	Writers' Buildings		ditto
Banarji, Prasad Das	Clerk, D A G P & T Office	7, Koilaghat Street		ditto
Banarji, Prasad Das	Reader, Government of India Press	8, Hastings Street		ditto
Banarji, Provas Chandra	Supervisor, Drainage Department, Calcutta Corporation	Municipal Office		ditto

No.	Names.	Style or calling.	Residence or place of business.	Religion.
	Banarji, Provat Chandra	Lecturer, Government Commercial Institute	11, Hastings Street	Hindu
	Banarji, Pravat Kusum	Clerk, Pre-Audit Section, Port Commissioners' Office	Strand Road	ditto
	Banarji, Pulin Bihari	Sub-Head, C A O's Office, E I R	E I R House	ditto
	Banarji Pulin Behari, BA	Assistant, Finance Dept, Bengal Secretariat	Writers' Buildings	ditto
	Banarji, Pulin Bihari	Assistant, Andrew Yule & Co, Ld	8, Clive Row	ditto
	Banarji, Purna Chandra	Clerk, Burmah Shell Co of India, Ltd	Hongkong House	ditto
	Banarji, Purna Chandra	Assistant, Balmer, Lawrie & Co, Ld	103, Clive Street	ditto
	Banarji Radhakinkar, BA	Head Reader, Bengal Library	Writers' Buildings	ditto
	Banarji, Radhikamohan	Clerk, Telegraph Check Office	33, Dalhousie Square (South)	ditto
	Banarji, Radhika Prasanna	Assistant, J Thomas & Co	8, Mission Row	ditto
	Banarji, Radhika Ranjan, BA	Assistant, A G's Office, Bengal	Treasury Buildings	ditto
	Banarji, Rajani Mohan	Reader, Calcutta Corporation Press	Municipal Office	ditto
	Banarji, Rajendra Lal	Clerk, Licensed Measurers Department	2, Clive Street	ditto
	Banarji, Rajendra Nath	Stenographer & Librarian, YMCA	86, College Street	Christian
	Banarji, Raj Kumar, BSc	Assistant, Bengal Secretariat, Finance Department	Writers' Buildings	Hindu
	Banarji, Ramchandra, BA	Clerk, D A G P & T Office	7, Koilaghat Street	ditto
	Banarji, Rameshwar	Clerk, Turner, Morrison & Co, Ld	6, Lyons Range	ditto

Banarji, Rajendra Nath	Assistant, Calcutta University	Senate House	ditto
Banarji, R C	Clerk, Calcutta Mint	47, Strand Road	ditto
Banarji, Sachidananda	Head Clerk, Jardine Skinner & Co	4, Clive Row	ditto
Banarji, Sanjiban	Clerk, Mercantile Bank of India, Ld	8, Clive Street	ditto
Banarji, Santos Kumar	Cashier, Commercial Intelligence Department, India	1, Council House Street	ditto
Banarji, Santos Kumar	Clerk, Pre-Audit Section, Port Commissioners' Office	Strand Road	ditto
Banarji, Santos Kumar	Stenographer, Office of His Majesty's Senior Trade Commissioner in India.	4, Fairlie Place	ditto
Banarji, Santos Kumar	Clerk, C A O's Office, E I R	E I R House	ditto
Banarji, Santos Kumar	Clerk, D A G P & T Office	7, Koilaghat Street	ditto
Banarji, Saroj Nath, MA	Assistant, A-G's Office, Bengal	Treasury Buildings	ditto
Banarji, Satipada	Clerk, Telegraph Check Office	33, Dalhousie Square, South	ditto
Banarji, Satish Chandra	Assistant, Bengal Secretariat, Judicial Department	Writers' Buildings	ditto
Banarji, Satish Chandra	Assistant, Bengal Secretariat, Central Despatch Office	Writers' Buildings	ditto
Banarji, Satish Chandra, BL	Inspector, License Department, Calcutta Corporation	Municipal Office	ditto
Banarji, Satish Chandra, BA	Assistant, Income-tax Office	3, Government Place, West	ditto
Banarji, Satish Chandra, BA	Stenographer and Council Reporter	Writers' Buildings	ditto
Banarji, Satish Chandra	Assistant, Calcutta University	Senate House	ditto
Banarji, Satish Ch, BA, BL	Clerk, Telegraph Check Office	33, Dalhousie Square, South	ditto

No.	Names.	Style or calling.	Residence or place of business.	Religion.
	Banarji, Satya Charan	Head Clerk, Government Commercial Institute	11, Hastings Street	Hindu
	Banarji, Satya Charan	Assistant, Price, Waterhouse, Peat & Co	B-4, Clive Buildings	ditto
	Banarji, Satya Kinkar, BA	Assistant, Calcutta University	Senate House	ditto
	Banarji, Satyendra Nath	Assistant, Accountant General's Office, Bengal	Treasury Buildings	ditto
	Banarji, S C	Assistant, Barry & Co	2, Fairlie Place	ditto
	Banarji, Shachindra Nath, MSc	Lecturer, Ripon College	24, Harrison Road	ditto
	Banarji, Shachindra Nath	Cashier, Hoare Miller & Co, Ld	5, Fairlie Place	ditto
	Banarji, Shailendra Chandra	Clerk, D A G P & T Office	7, Koilaghat Street	ditto
	Banarji, Shailendra Nath	Engineer, English Electric Co, Ld	D-4, Clive Buildings	ditto
	Banarji, Shailendra Nath	Clerk, C E S C, Ld	Victoria House	ditto
	Banarji, Sharat Chandra	Assistant, Balmer, Lawrie & Co, Ld	103, Clive Street	ditto
	Banarji, Sharat Chandra	Assistant, Burn & Co, Ld	12, Mission Row	ditto
	Banarji, Sharat Kumar, B SC	Assistant Analyst, Bengal Public Health Laboratory	Chittaranjan Avenue	ditto
	Banarji, Shib Das	Assistant, Mackinnon Mackenzie & Co	16, Strand Road	ditto
	Banarji, Shibdayal	Assistant, Burn & Co, Ld	12, Mission Row	ditto
	Banarji, Shibkrishna, BA	Assistant, Accountant-General's Office, Bengal	Treasury Buildings	ditto
	Banarji, Shib Narayan	Assistant, Indian Stores Department	6, Esplanade, East	ditto

Banarji, Shrish Chandra	Clerk, Telegraph Check Office	33, Dalhousie Square (South)	ditto
Banarji, Shyamapada	Head Assistant (Coal Shipping), Macneill & Co	2, Fairlie Place	ditto
Banarji, Shyamapada BA,	Assessor, Income-tax Office	3, Government Place, (West)	ditto
Banarji, Shyamranjan	Assistant, Income-tax Office	1, Hare Street	ditto
Banarji, Sisir Kumar	Clerk, D A G P & T Office	7, Koilaghat Street	ditto
Banarji, Sivamoy, B SC	Assistant, Patent Office	1, Council House Street	ditto
Banarji, S K	Assistant, Queensland Insurance Co, Ld	6, Royal Exchange Place	ditto
Banarji, Sourendra Mohan	Demonstrator, Presidency College	86-1, College Street	ditto
Banarji, Subodh Kumar	Clerk, D A G P & T Office	7, Koilaghat Street	ditto
Banarji, Sudhir Chandra	Stenographer, Burmah Shell Co. of India, Ltd.	Hongkong House	ditto
Banarji, Sudhir Chandra	Computor, Govt of India Press	8, Hastings Street	ditto
Banarji, Sudhir Chandra	Clerk, Imperial Bank of India	3, Strand Road	ditto
Banarji, Sudhir Chandra	Assistant, Bengal Secretariat, Political Department (Special)	Writers' Buildings	ditto
Banarji, Sudhir Kumar	Assistant Superintendent, Accountant-General's Office, Bengal	Treasury Buildings	ditto
Banarji, Sudhir Kumar, M SC	Demonstrator, Scottish Churches College	4, Cornwallis Square	ditto
Banarji, Sudhir Kumar, BA	Assistant, Engineer's Office, District No II, Calcutta Corporation	22, Mirzapore Street	ditto
Banarji, Surendra Chandra	Surveyor and Draftsman, Calcutta Corporation	Municipal Office	ditto
Banarji, Surendra Krishna	Assistant, Office of the I-G of Registration, Bengal	Writers' Buildings	ditto

No.	Names.	Style or calling.	Residence or place of business.	Religion.
	Banarji, Surendra Mohan	Assistant, Mackinnon, Mackenzie & Co	16, Strand Road	Hindu
	Banarji, Surendra Nath	Assistant, Bengal Secretariat, Finance Department	Writers' Buildings	ditto
	Banarji, Surendra Nath, No I	Assistant, Office of the Director of Public Instruction, Bengal	Writers' Buildings	ditto
	Banarji, Surendra Nath, No II	Assistant, Office of the Director of Public Instruction, Bengal	Writers' Buildings	ditto
	Banarji, Surendra Nath	Assistant, Andrew Yule & Co, Ld	8, Clive Row	ditto
	Banarji, Surendra Nath, MA	Demonstrator, Ripon College	24, Harrison Road	ditto
	Banarji, Surendra Nath	Clerk, Imperial Bank of India	3, Strand Road	ditto
	Banarji, Surendra Nath, No I	Assistant, Mackinnon, Mackenzie & Co	16, Strand Road	ditto
	Banarji, Surendra Nath, No II	Assistant, Mackinnon, Mackenzie & Co	16, Strand Road	ditto
	Banarji, Surendra Nath	Clerk, Burmah Shell Co of India, Ld	Hongkong House	ditto
	Banarji, Suresh Chandra	Clerk, Calcutta Improvement Trust	5, Clive Street	ditto
	Banarji, Suresh Chandra	Outstanding Inspector, E B R	3, Kailaghat Street	ditto
	Banarji, Suresh Chandra	Clerk, C O P S's Office, E I R	E I R House	ditto
	Banarji, Sushil Chandra, BA	Assistant, Accountant-General's Office, Bengal	Treasury Buildings	ditto
	Banarji, Sushil Chandra	Assistant, Controller's Office, Calcutta University	Senate House	ditto
	Banarji, Sushil Kumar, BA	Inspector, License Department, Calcutta Corporation	Municipal Office	ditto
	Banarji, Taradas	Rent Collector, Calcutta Improvement Trust	5, Ctreet Street	ditto

Banarji, Tarakdas	Assistant, Accountant-General's Office, Bengal	Treasury Buildings		ditto
Banarji, Tinkari BA	Assistant, Accountant-General's Office, Bengal	Treasury Buildings		ditto
Banarji, Tulsi Charan	Clerk, Pre-Audit Section, Port Commissioners' Office	Strand Road		ditto
Banarji, Tulsidas	Assistant, Bengal Secretariat, Appointment Department	Writers' Buildings		ditto
Banarji, Tulsidas BA	Assistant, Accountant-General's Office, Bengal	Treasury Buildings		ditto
Banik, Sita Nath	Accounts Clerk, E B R	3, Kailaghat Street		ditto
Baqui, Abdul (Maulvi), MA	Lecturer, Islamia College	8, Wellesley Street		Mahomedan
Baral, Amullya Kumar	Clerk, Burmah Shell Co of India, Ld	Hongkong House		Hindu
Baral, Bijaya Kali	Clerk, Burmah Shell Co of India, Ld	Hongkong House		ditto
Baral, Bishwanath	Assistant, Lovelock & Lewes	4, Lyons Range		ditto
Baral, Deb Bhusan	Book-keeper, Jardine Skinner & Co	4, Clive Row		ditto
Baral, Gopeshwar	Clerk, Gillanders, Arbuthnot & Co	8, Clive Street		ditto
Baral, Gorachand	Stenographer, I T Office	3, Government Place, West		ditto
Baral, Nritya Gopal	Assistant, Lovelock & Lewes	4, Lyons Range		ditto
Baral, Shashi Bhusan	Cashier, G Atherton & Co (Eastern), Ld	8, Clive Street		ditto
Barary, Manindra Mohan	Clerk, Surveyor General's Office	13. Wood Street		ditto
Barat, Krishnapada	Assistant, Income-tax Office	6, Esplanade, East		ditto
Barat, Panchu Gopal	Stenographer, Martin & Co	12, Mission Row		ditto

No.	Names.	Style or calling.	Residence or place of business.	Religion.
	Bardhan, Bata Krishna ..	.. Store-keeper, Balmer Lawrie & Co, Ld	.. 103, Clive Street	Hindu
	Bardhan, Jashoda Kishore	.. Head Assistant, Office of the Superintending Engineer, S Circle, P W D	3, Government Place, West ..	ditto
	Bari, Abdul (Maulvi) ..	.. Assistant, Bengal Secretariat, Appointment Department	.. Writers' Buildings	Mahomedan
	Barman, Jasoda Nandan	.. Assistant, Bengal Secretariat, L S-G Department ..	.. Writers' Buildings	Hindu
	Barman, Manik Chandra	.. Clerk, C O P S's Office, E I R	.. E I R House	ditto
	Barman, Shachindra Mohan, MSc, BL	Supervisor, Mathematical Instrument Office ..	.. 15, Wood Street	ditto
	Basak, Ahindra Kumar, MA	.. Inspector, Collection Department, Calcutta Corporation	.. Municipal Office	ditto
	Basak, Balai Chand ..	.. Accountant, Hoare Miller & Co, Ld	.. 5, Fairlie Place	ditto
	Basak, Brindaban Chandra	.. Assistant, Office of the Superintending Engineer, P W D, Presidency Circle	Writers Buildings	ditto
	Basak, Debendra Nath	.. Clerk, D A G P & T Office	.. 7, Kailaghat Street	ditto
	Basak, Dhirendra Kumar, BSc	.. Assistant, Accountant-General's Office, Bengal ..	.. Treasury Buildings	ditto
	Basak, Jahar Lal ..	.. Clerk, Commercial Union Assurance Co, Ld ..	.. 32, Dalhousie Square	ditto
	Basak, Lal Bihari ..	.. Assistant, Union Insurance Society of Canton, Ld ..	.. 8, Clive Street	ditto
	Basak, Manamohan ..	.. Clerk, *Statesman*, Ld	.. Statesman House	ditto
	Basak, Manamohan ..	.. Cashier, James Murray & Co	.. 5, Old Court House Street ..	ditto
	Basak, Murari Mohan ..	.. Assistant, Andrew, Yule & Co, Ld	.. 8, Clive Row	ditto
	Basharatullah, Md ..	. Head Maulvi, Calcutta Madrasah ..	.. 19, Wellesley Square	Mahomedan

Basir, Md	Clerk, Telegraph Check Office	33, Dalhousie Square, South	ditto
Basu, Abala Kanta	Assistant, Bird & Co	1-1, Clive Street	Hindu
Basu, Abanishwar, BL	Assessing Inspector, Calcutta Corporation	Municipal Office	ditto
Basu. Abhaya Pada	Clerk, Union Insurance Society of Canton, Ld	8, Clive Street	ditto
Basu, Abhaya Pada	Salesman, Symonds & Co	11, Clive Street	ditto
Basu, Ajit Kumar, BA	Examiner of Accounts, Income-tax Office	6, Esplanade, East	ditto
Basu, Ajit Kumar	Assistant, Martin & Co	12, Mission Row	ditto
Basu, Akshaya Kumar	Assistant, F W Heilgers & Co	1-1, Clive Street	ditto
Basu, Akshaya Kumar	Head Clerk, Calcutta Improvement Trust	5, Clive Street	ditto
Basu, Amar Krishna	Head Clerk, Marconi Co, Ld	6, Old Post Office Street	ditto
Basu, Amitava	Clerk, Imperial Bank of India	3, Strand Road	ditto
Basu, Amrita Lal	Clerk, D A G P & T Office	7, Koilaghat Street	ditto
Basu, Anathnath	Lecturer, Calcutta University	Senate House	ditto
Basu, Anil Nath	Clerk, Booking Section, Port Commissioners' Office	Strand Road	ditto
Basu, Anukul Chandra	Assistant, Royal Calcutta Turf Club	11, Russell Street	ditto
Basu, Arunodaya	Chief Clerk, C O P S's Office, E I R	E I R House	ditto
Basu, Atul Krishna	Assistant, Mackinnon, Mackenzie & Co	16, Strand Road	ditto
Basu, Atul Krishna	Assistant, Commercial Intelligence Department	1, Council House Street	ditto

No.	Names.	Style or calling	Residence or place of business.	Religion.
	Basu, Badal Chandra ..	.. Stenographer, Kalamazoo, Ld	.. 2/3, Clive Street	Hindu
	Basu, Balai Chandra, MB	.. Sanitary Officer, Calcutta Corporation, District No. 1	.. 79, Cornwallis Street	ditto
	Basu, Barada Prasanna	.. Assistant, Cox & Kings (Agents), Ld	.. 5, Bankshall Street	ditto
	Basu, Basanta K ..	.. Assistant, Grahams Trading Co (India), Ld ..	.. 6, Lyons Range	ditto
	Basu, Basanta Kumar ..	.. Clerk, D A G P & T Office	.. 7, Koilaghat Street	ditto
	Basu, Basanta Kumar, II	.. Clerk, Telegraph Check Office	.. 33, Dalhousie Square, South ..	ditto
	Basu, Basanta Kumar	.. Cashier, Balmer Lawrie & Co Ltd	.. 103, Clive Street	ditto
	Basu, Bhudeb Shankar ..	.. Chief Clerk, C E S C, Ld	.. Victoria House	ditto
	Basu, Bhupendra Nath ..	.. Assistant, Begg, Dunlop & Co, Ld	.. 2, Hare Street	ditto
	Basu, Bibhas Chandra ..	.. Assistant, Accountant-General's Office, Bengal ..	.. Treasury Buildings	ditto
	Basu, Bibhuti Bhusan ..	.. Clerk Martin & Co.	.. 12, Mission Row	ditto
	Basu, Bijalinath ..	.. Stenographer, National City Bank of New York ..	.. 4, Clive Street	ditto
	Basu, Bijaya Krishna ..	.. Assistant, Central Stationery Office	.. 3, Church Lane	ditto
	Basu, Bijaya Krishna, II	.. Clerk, Telegraph Check Office	.. 33, Dalhousie Square, South ..	ditto
	Basu, Bijaya Krishna ..	.. Clerk, C E's Office, E I R	.. E I R House	ditto
	Basu, Binaya Krishna ..	.. Clerk, Calcutta Improvement Trust	.. 5, Clive Street	ditto
	Basu, Binode Bihari .	.. Representative, Spicers (Export), Ld . ..	.. Stephen House	ditto

Basu, Birendra Nath	Accountant, Banga Luxmi Soap Works	28, Pollock Street	ditto
Basu, Bishnu Pada	Clerk, Telegraph Check Office	33, Dalhousie Square, South	ditto
Basu, Bisweswar Prasad	Assistant, Bengal Secretariat, L S-G Department	Writers' Buildings	ditto
Basu, B K	Assistant, Office of the Inspector-General of Prisons, Bengal	Writers' Buildings	ditto
Basu, Braja Gopal	Clerk, Booking Section, Port Commissioners' Office	Strand Road	ditto
Basu, Buddhadeb, MA	Lecturer, Ripon College	24, Harrison Road	ditto
Basu, Debendra Nath, BSc	Salesman, Adair Dutt & Co, Ld	5, Dalhousie Square	ditto
Basu, Debendra Nath	Director, The New Bengal Bank, Ld	15, Clive Street	ditto
Basu, Dhirendra Kumar	Surveyor, Calcutta Improvement Trust	5, Clive Street	ditto
Basu, Dhirendra Nath	Accountant, Unique Assurance Co, Ld	10, Canning Street	ditto
Basu, Dhirendra Nath	Assistant, Andrew Yule & Co, Ld	8, Clive Row	ditto
Basu, Dhirendra Nath, MA	Assistant, Board of Revenue, Bengal	Writers' Buildings	ditto
Basu, Digindra Nath	Assistant, Bengal Chemical & Pharmaceutical Works, Ld	31, Chittaranjan Avenue, South	ditto
Basu, Dulal Krishna, BA	Clerk, Deputy Accountant-General, Posts & Telegraphs Office	7, Koilaghat Street	ditto
Basu, Durgapada, BA	Clerk, Telegraph Check Office	33, Dalhousie Square, South	ditto
Basu, Durlav Ch	Clerk, Traffic Department, E B R	3, Koilaghat Street	ditto
Basu, Dwijendra Chandra	Assistant, Government of India Press	8, Hastings Street	ditto
Basu, Dwijendra Nath	Assistant, Accountant-General's Office, Bengal	Treasury Buildings	ditto

No.	Names.	Style or calling.	Residence or place of business.	Religion.
	Basu, Ekkari	Assistant, Bengal Secretariat, Political Department	Writers' Buildings	Hindu
	Basu, G B	Clerk, C E S C, Ld	Victoria House	ditto
	Basu, G N	Clerk, C E S C, Ld	Victoria House	ditto
	Basu, Gobardhan	Assistant, Accountant-General's Office, Bengal	Treasury Buildings	ditto
	Basu, Gobordhan	Assistant Accountant, Lighting, Calcutta Corporation	Municipal Office	ditto
	Basu, Gopal Chandra	Clerk, D A G P & T Office	7, Koilaghat Street	ditto
	Basu, Gopal Chandra	Accountant, Office of the 2nd Land Aquisition Collector	5, Bankshall Street	ditto
	Basu, Gopal Krishna	Manager, Dass & Co	20, Strand Road	ditto
	Basu, Gopendra Krishna	Clerk, Central Stationery Office	3, Church Lane	ditto
	Basu, Gopendra Nath	Assistant, James, Finlay & Co, Ld	1, Clive Street	ditto
	Basu, Gostha Bihari	Assistant, Balmer, Lawrie & Co, Ld	103, Clive Street	ditto
	Basu, Gour Gopal	Clerk, D A G P & T Office	7, Koilaghat Street	ditto
	Basu, Haradhan	Clerk, Imperial Tobacco Co of India, Ld	37, Chowringhee	ditto
	Basu, Harendra Mohan	Assistant, Accountant-General's Office, Bengal	Treasury Buildings	ditto
	Basu, Haridas	Assistant, Accountant-General's Office, Bengal	Treasury Buildings	ditto
	Basu, Haridas	Accounts Clerk, E B R	3, Kalighat Street	ditto

Basu, Hari Pada, BA, BT	Assistant Head Master, Hare School	87, College Street	ditto
Basu, Haripada	Reader, Government of India Press	8, Hastings Street	ditto
Basu, Hazarilal	Clerk, Booking Section, Port Commissioners' Office	Strand Road	ditto
Basu, Hem Chandra, BA	Assistant, Commercial Intelligence Department	1, Council House Street	ditto
Basu, Hem Chandra	Head Clerk, Berthoud & Co	6, Royal Exchange Place	ditto
Basu, Hiralal	Shipping Clerk, Williamson, Magor & Co	4, Mangoe Lane	ditto
Basu, Hirendra Kumar	Assistant, Commercial Intelligence Department	1, Council House Street	ditto
Basu, H K	W W Overseer, Calcutta Improvement Trust	5, Clive Street	ditto
Basu, Indu Bhusan, MA, BL	Assistant, Bengali Translator's Office	Writers' Buildings	ditto
Basu, Indu Bhusan	Assistant, Bengal Secretariat, Accounts Department	Writers' Buildings	ditto
Basu, Jahar Lal	Accountant, The Indian School Supply Depot	Chittaranjan Avenue, South	ditto
Basu, Jamini Kanta	Clerk, Royal Insurance Co, Ld	26 & 27, Dalhousie Square	ditto
Basu, Jatindra Nath	Levlg Surveyor, Special Officer's Deptt, Calcutta Corporation	Municipal Office	ditto
Basu, Jatindra Nath	Clerk, Imperial Bank of India	3, Strand Road	ditto
Basu, Jatindra Nath	Assistant, Royal Insurance Co, Ld	26 & 27, Dalhousie Square	ditto
Basu, Jatindra Nath	Draftsman, Surveyor-General's Office	13, Wood Street	ditto
Basu, Jishnu Kumar	Steno-Typist, Scottish Church College	4, Cornwallis Square	ditto

No.	Names.	Style or callings	Residence or place of business.	Religion.
	Basu, Jitendra Nath	Clerk, C C M's Office, E I R	E I R House	Hindu
	Basu, Jitendra Nath	Clerk, Union Insurance Society of Canton, Ld	8, Clive Street	ditto
	Basu, Jitendranath	Clerk, I G N & Ry Co, Ld	4, Fairlie Place	ditto
	Basu, J N	Salesman, Remington Rand, Inc	3, Council House Street	ditto
	Basu, Jnanendra Nath	Clerk, Imperial Bank of India	3, Strand Road	ditto
	Basu, Jogendra Nath	Assistant Accountant, English Electric Co, Ld	D-4, Clive Buildings	ditto
	Basu, Jogesh Chandra	Ledgerkeeper, Bombay Co, Ld	19, British Indian Street	ditto
	Basu, Jugal Kishore	Clerk, D A G P & T Office	7, Koilaghat Street	ditto
	Basu, Jyotish Chandra	Assistant, Lionel Edwards, Ld	D-1, Clive Buildings	ditto
	Basu, Jyotish Chandra	Inspector, Collection Department, Calcutta Corporation	Municipal Office	ditto
	Basu, Jyotsna Kanta	Professor, Bangabasi College	25-1, Scott Lane	ditto
	Basu, Kalidas	Shipping Clerk, Williamson, Magor & Co	4, Mangoe Lane	ditto
	Basu, Kalipada	Clerk, Lloyds Bank, Ld	101-1, Clive Street	ditto
	Basu, Kashinath	Clerk, Calcutta Improvement Trust	5, Clive Street	ditto
	Basu, Khagendra Krishna	Clerk, Imperial Tobacco Co of India, Ld	37, Chowringhee	ditto
	Basu, Khagesh Chandra	Lecturer, Sanskrit College	College Square	ditto

Basu, Krishna Chandra	Clerk, D A G P & T Office	7, Koilaghat Street		ditto
Basu, Krishnadas	Clerk, Port Commissioners' Office	Strand Road		ditto
Basu, Krishnadas	Reference In charge, Mathematical Instrument Office	15, Wood Street		ditto
Basu, Kshitindra Nath	Assistant, Income-tax Office	1, Hare Street		ditto
Basu, Kumar Krishna	Assistant, Office of the Director of Public Instruction, Bengal	Writers' Buildings		ditto
Basu, Kumud Kumar	Assistant, Imperial Library	6, Esplanade, East		ditto
Basu, Lakshi Kanta	Clerk, D A G P & T Office	7, Koilaghat Street		ditto
Basu, Lalit Mohan	Clerk, D A G P & T Office	7, Koilaghat Street		ditto
Basu, Lalit Mohan	Stenographer, Surveyor's Deptt, Calcutta Corporation	Municipal Office		ditto
Basu, Lalit Mohan	Head Clerk, Executive Engineer's Office, City Division	Writers' Buildings		ditto
Basu, L M	Assistant, Jessop & Co, Ld	93, Clive Street		ditto
Basu, Mahendra Lal	Assistant, Commercial Intelligence Department	1, Council House Street		ditto
Basu, Manajit Madhab	Examiner of Stores, Indian Stores Department	6, Esplanade, East		Christian
Basu, Manaranjan	Erector, Jewell Export Filter Co, Inc	10, Clive Street		Hindu
Basu, Manindra Chandra	Assistant, Calcutta University	Senate House		ditto
Basu, Manindra Nath	Clerk, Telegraph Check Office	33, Dalhousie Square, South		ditto
Basu, Manindra Nath	Assistant, Balmer, Lawrie & Co, Ld	103, Clive Street		ditto
Basu, Manindra Nath	Clerk, Calcutta Improvement Trust	5, Clive Street		ditto

No.	Names.	Style or calling.	Residence or place of business.	Religion.
	Basu, Manindra Nath	Stenographer, Harrisons & Crosfield, Ld	6, Church Lane	Hindu
	Basu, Manindra Nath	Head Draftsman, C R E's Office, P & A District	Fort William	ditto
	Basu, Manindra Nath	Accountant, Calcutta Collectorate	3, Charnock Place	ditto
	Basu, Manindra Nath	Clerk, Gillanders, Arbuthnot & Co	8, Clive Street	ditto
	Basu, Manindra Nath	Assistant Manager, Parry's Engineering, Ld	10, Clive Row	ditto
	Basu, Manmatha Nath	Assistant, Office of the Director of Industries, Bengal	40-1A, Free School Street	ditto
	Basu, Manoj Kumar	Salesman, Minimax, Ld	Mercantile Buildings	ditto
	Basu, Manoj Kumar	Assistant, Office of the Inspector-General of Registration, Bengal	Writers' Buildings	ditto
	Basu, Manoranjan	Erector, Jewell Export Filter Co, Inc	10, Clive Street	ditto
	Basu, Mati Lal	Accounts Clerk, E B R	3, Koilaghat Street	ditto
	Basu, Mati Lal	Clerk, D A G P & T Office	7, Koilaghat Street	ditto
	Basu, M N, BA	Assistant, S R Batliboi & Co	1-B, Old Post Office Street	ditto
	Basu, Naba Kumar	Clerk, D A G P & T Office	7, Koilaghat Street	ditto
	Basu, Nabin Chandra	Passed Accounts Clerk, Ex Engineer's Office, City Division	Writers' Buildings	ditto
	Basu, Nagendra Mohan	Assistant, Surgeon-General's Office, Bengal	Writers' Buildings	ditto
	Basu, Nalin Coomar	Journalist, *Statesman*, Ld	Statesman House	ditto
	Basu, Nanilal	Clerk, D A G P & T Office	7, Koilaghat Street	ditto
	Basu, Narayan Ch	Clerk, Chief Auditor's Office, E I R	E I R House	ditto
	Basu, Narayan Chandra, BA	Clerk, City Architect's Deptt, Calcutta Corporation	Municipal Office	ditto
	Basu, Narayan Prasad	Dy Cashier, Shaw Wallace & Co	4, Bankshall Street	ditto
	Basu, Narendra Nath, BA	Assistant, Accountant-General's Office, Bengal	Treasury Buildings	ditto

Basu, Narendra Nath	Clerk, Mackinnon Mackenzie & Co	16, Strand Road	ditto
Basu, Naresh Chandra	Stenographer, Calcutta Improvement Trust	5, Clive Street	ditto
Basu, Naresh Chandra	Building Inspector, Calcutta Corporation	Municipal office	ditto
Basu, Nirmal Chandra, BA	Clerk, D A G P & T Office	7, Koilaghat Street	ditto
Basu, Nirendra Nath	Assistant, Accountant-General's Office, Bengal	Treasury Buildings	ditto
Basu, N K (Sr)	Clerk, Heatly & Gresham, Ld	6, Waterloo Street	ditto
Basu, N K (Jr)	Clerk, Heatly & Gresham, Ld	6, Waterloo Street	ditto
Basu, Nripendra Krishna	Clerk, Place, Siddons and Gough	6, Lyons Range	ditto
Basu, Nripendra Nath, MA	Clerk, D A G P & T Office	7, Koilaghat Street	ditto
Basu, Nripendra Nath	Accounts Clerk, Lipton, Ld	9, Weston Street	ditto
Basu, N	Assistant, Balmer Lawrie & Co, Ld	103, Clive Street	ditto
Basu, Panchanan	Clerk, Mercantile Bank of India, Ld	8, Clive Street	ditto
Basu, Panna Lal	Assistant, Surgeon-General's Office, Bengal	Writers' Buildings	ditto
Basu, Pashupati	Engineer, Krupp Indian Trading Co, Ld	22, Canning Street	ditto
Basu, P N	Assistant, Guest, Keen, Williams, Ld	7, Council House Street	ditto
Basu, PhanindraNath	Bill Clerk, National Bank of India, Ld	104, Clive Street	ditto
Basu, Prabodh Chandra	Canvasser, Liverpool & London & Globe Insurance Co, Ld	26, Dalhousie Square	ditto
Basu, Prabodh Chandra	Assistant, Royal Insurance Co, Ld	26 & 27, Dalhousie Square	ditto
Basu, Prabodh Kanta, MA	Additional Officer, Central Bank of India, Ld	133, Cornwallis Street	ditto
Basu, Prabodh Kumar, BA	Assistant Master, Oriental Seminary	336, Upper Chitpur Road	ditto

No.	Names.	Style or calling.	Residence or place of business.	Religion.
	Basu, Prafulla Chandra, BL	Assistant, Bengal Secretariat, Accounts Department	Writers' Buildings	Hindu
	Basu, Prafulla Chandra	Assistant, Central Forms Store	166, Dharamtala Street	ditto
	Basu, Prafulla K	Outstanding Inspector, E B R	3, Koilaghat Street	ditto
	Basu, Prakash Chandra	Clerk, Imperial Bank of India	3, Strand Road	ditto
	Basu, Pramatha Nath	Prover, Photo-Litho Branch, Surveyor-General's Office	14, Wood Street	ditto
	Basu, Pramatha Nath	Head Clerk, Stores Deptt, E B R	3, Koilaghat Street	ditto
	Basu, Pramatha Nath	Assistant, Bengal Secretariat, Accounts Department	Writers' Buildings	ditto
	Basu, Pramil Chandra, BA	Assistant Librarian, Calcutta University	Senate House	ditto
	Basu, Prasad Das	Clerk, D A G P & T Office	7, Koilaghat Street	ditto
	Basu, Pratap Chandra	Assistant, Controller's Office, Calcutta University	Senate House	ditto
	Basu, Pravas Chandra	Clerk, D A G P & T Office	7, Koilaghat Street	ditto
	Basu, Pravas Chandra	Clerk, Lloyds Bank, Ld	101-1, Clive Street	ditto
	Basu, Pravas Chandra	Assistant, Office of the Inspector-General of Police	Writers' Buildings	ditto
	Basu, Pravas Kanta	Clerk, C O S Office, E I R	E I R House	ditto
	Basu, Pulin Chandra	Clerk, Burmah Shell Co of India, Ld	Hongkong House	ditto
	Basu, Pulin Dhan	Assistant, Accountant-General's Office, Bengal	Treasury Buildings	ditto
	Basu, Purna S, BSc	Head Clerk, S S Hogg Market Office	Hogg Market	ditto
	Basu, Rabindra Nath	Clerk, Imperial Bank of India	3, Strand Road	ditto
	Basu, Radha Kanta	Clerk, D A G P & T Office	7, Koilaghat Street	ditto

Basu, Radharaman	Assistant, Lovelock & Lewes	4, Lyons Range	ditto
Basu, Radharaman	Typist, Lardner North & Co	8, Strand Road	ditto
Basu, Radhika Prasad	Assistant, Office of the Inspector-General of Prisons, Bengal	Writers' Buildings	ditto
Basu, Rajendra Nath	Clerk, Telegraph Check Office	33, Dalhousie Square, South	ditto
Basu, Raj Krishna	Stenographer, Traffic Department, E B R	3, Kay'aghat Street	ditto
Basu, Rakhal Das	Inspector, Collection Department, Calcutta Corporation	Municipal Office	ditto
Basu, Rakhal Das, BSc	Assistant, Accountant-General's Office, Bengal	Treasury Buildings	ditto
Basu, Ramabhusan, BE	Proprietor, Hindustan Engineer & Construction Co	10, Hastings Street	ditto
Basu, Ramani Kanta	Assistant, Accountant-General's Office, Bengal	Treasury Buildings	ditto
Basu, Ramani Mohan	Accountant, Factory Inspection Department, Bengal	40-1A, Free School Street	ditto
Basu, Ramendra Kumar, BL	Clerk, C A's Office, E I R	E I R House	ditto
Basu, Ramesh Ch	Assistant, Grahams Trading Co (India), Ld	6, Lyons Range	ditto
Basu, Ranendra N	Clerk, I G N & Ry Co, Ld	4, Fairlie Place	ditto
Basu, Rangalal	Clerk, Norwich Union Fire Insurance Society, Ld	8, Old Court House Street	ditto
Basu, Rash Bihari	Assistant, Ewing & Co, Ld	4, Clive Row	ditto
Basu, Rathindra Nath, BA	Inspector Surveyor, I T Office	3, Government Place, West	ditto
Basu, Sahayaram	Professor, Bangabasi College	25-1, Scott Lane	ditto

No.	Names.	Style or calling.	Residence or place of business.	Religion.
	Basu, Sakti Kshetra	Clerk, E B R	3, Koilaghat Street	Hindu
	Basu, Santos Krishna	Assistant, Accounts Department, Calcutta Corporation	Municipal Office	ditto
	Basu, Santos Kumar	Asstt Cashier, P & O Banking Corporation, Ld	1, Fairlie Place	ditto
	Basu, Sarada Prasanna	Assistant Cashier, Lloyds Bank, Ld	101-1, Clive Street	ditto
	Basu, Sarat Chandra	Clerk, Imperial Bank of India	3, Strand Road	ditto
	Basu, Satish Chandra, MA	Teacher, Bangabasi Collage-School	19, Scott Lane	ditto
	Basu, Satish Chandra	Assistant, Royal Insurance Co; Ld	26 & 27, Dalhousie Square	ditto
	Basu, Satish Chandra	Clerk, Gillanders, Arbuthnot & Co	8, Clive Street	ditto
	Basu, Satyendra Krishna	Assistant, Office of the Director of Industries, Bengal	40-1A, Free School Street	ditto
	Basu, Shachindra Nath	Assistant, Accountant-General's Office, Bengal	Treasury Buildings	ditto
	Basu, Shachindra Nath	Revenue Assistant, Presidency Commissioner's Office	3, Charnock Place	ditto
	Basu, Shachipati	Assistant, Accountant-General's Office, Bengal	Treasury Buildings	ditto
	Basu, Shailendra Nath	Clerk, Chief Mining Engineer's Office, Railway Board	1, Council House Street	ditto
	Basu, Shailendra Nath	Assistant, Bird & Co	1-1, Clive Street	ditto
	Basu, Shailendra Nath	Manager to S C Ghose	5, Ezra Street	ditto
	Basu, Shailendra Nath	Assistant, Central Stationery Office	3, Church Lane	ditto
	Basu, Shambhu Gopal, BA	Assistant, Accountant-General's Office, Bengal	Treasury Buildings	ditto

Basu, Shanti Kumar, BA	Assistant, Bengal Secretariat, Judicial Department	Writers' Buildings	ditto
Basu, Shibanikinkar	Assistant, Accountant-General's Office, Bengal	Treasury Buildings	ditto
Basu, Shital Chandra	Clerk, Imperial Bank of India	3, Strand Road	ditto
Basu, Shrish Chandra	Clerk, Fire Department, South British Insurance Co, Ld	5, Clive Street	ditto
Basu, Sitanath	Assistant, Macneill & Co	2, Fairlie Place	ditto
Basu, Sourindra Mohan	Assistant, Accountant-General's Office, Bengal	Treasury Buildings	ditto
Basu, Subodh Kumar	Lighting Inspector, Calcutta Improvement Trust	5, Clive Street	ditto
Basu, Subodh Kumar, BSc,	Assistant, Accountant-General's Office, Bengal	Treasury Buildings	ditto
Basu, Subodh Kumar, MSc,	Assistant, Accountant-General's Office, Bengal	Treasury Buildings	ditto
Basu, Sudhir Chandra	Building Inspector, Calcutta, Corporation	Municipal office	ditto
Basu Sudhir Chandra	Reader, P S's Office, E I R	E I R House	ditto
Basu, Sudhir Chandra, BA	Assistant, Accountant-General's Office, Bengal	Treasury Buildings	ditto
Basu, Sudhir Kumar	Assistant, Commissioner of Excise and Salt, Bengal	Writers' Buildings	ditto
Basu, Sudhir Kumar	Inspector, Collection Department, Calcutta Corporation	Municipal Office	ditto
Basu, Sunil Kumar	Assistant, Bird, & Co	1-1, Clive Street	ditto
Basu, Surendra Nath	Assistant, Martin & Co	12, Mission Row	ditto
Basu, Surendra Nath, No I	Clerk, C A O's Office, E I R	E I R House	ditto
Basu, Surendra Nath, BL	Clerk, Health Department, Calcutta Corporation	79, Cornwallis Street	ditto

No.	Names.	Style or calling.	Residence or place of business.	Religion.
	Basu, Paresh Chandra	Assistant, Accountant General's Office, Bengal	Treasury Buildings	Hindu
	Basu, Sushil Chandra, BSc	Assistant Foreman, Printing Office, Calcutta Corporation	Municipal Office	ditto
	Basu, Tajendra Nath	Assistant, Accounts Department, Calcutta Corporation	Municipal Office	ditto
	Basu, Umapada	Book-keeper, Balmer, Lawrie & Co, Ld	103, Clive Street	ditto
	Basu Ray, Bijaya Bhusan	Assistant Cashier, Sun Life of Canada	12, Dalhousie Square, East	ditto
	Basu, Ray Chaudhuri Pramathanath	Assistant, Commercial Intelligence Department	1, Council House Street	ditto
	Basu Ray Chaudhuri, Pramode K	R D Inspector, E B R	3, Koilaghat Street	ditto
	Batabyal, Banu Gopal	Clerk, Booking Section, Port Commissioners' Office	Strand Road	ditto
	Batabyal, Binode Bihari	Assistant, Mackinnon, Mackenzie & Co	16, Strand Road	ditto
	Batabyal, Hari Prasad	Clerk, D A G P & T Office	7, Koilaghat Street	ditto
	Batabyal, Narendra Nath	Audit Inspector, Port Commissioners' Office	Strand Road	ditto
	Bera, Janaki Nath	Cashier, Calcutta University	Senate House	ditto
	Bhadra, Birendra Krishna, BA	Programme Assistant, All India Radio	1, Garstin Place	ditto
	Bhadra, Fatik Chandra	Clerk, D A G P & T Office	7, Koilaghat Street	ditto
	Bhadra, Hari Sadhan	Clerk, D A G P & T Office	7, Koilaghat Street	ditto
	Bhadra, Kaushiki Chandra	Accounts Clerk, E B R	3, Koilaghat Street	ditto
	Bhadra, Pramatha Nath	Clerk, D A G P & T Office	7, Koilaghat Street	ditto
	Bhadra, Satish Chandra	Clerk, D A G P & T Office	7, Koilaghat Street	ditto
	Bhadra, Shachindra Kumar	Assistant, Nestles and Anglo-Swiss Condensed Milk (Export) Co, Ld.	9-A, Clive Street	ditto
	Bhadra Shibendra Nath	Clerk, D A G P & T Office	7, Koilaghat Street	ditto

Bhaduri, Dwijendra Lal, BSc	Demonstrator, Vidyasagar College	39, Shankar Ghose Lane		ditto
Bhaduri, Nilmani, BA	Examiner of Stores, Indian Stores Department (Inspection)	6, Esplanade, East		ditto
Bhaduri, Rajani Kanta	Accountant, W Billinton & Co, Ld	Stephen House		ditto
Bhaduri, Sushilchandra	Sub-Head, C A O's Office, E I R	E I R House		ditto
Bhaduri Tamal, BSc	Clerk, D A G P & T Office	7, Koilaghat Street		ditto
Bhaduri, Upendra Nath	Assistant, Presidency College	86-1, College Street		ditto
Bhagwat, Sakharam Hari, BA	Assistant, Tata Iron & Steel Co, Ld	100, Clive Street		ditto
Bhanja, Murari Mohan	Clerk, Martin Co	12, Mission Row		ditto
Bhar, Akhil Chandra	Assistant, Macmillan & Co, Ld	294, Bowbazar Street		ditto
Bhar, Amulya Krishna	Clerk, Collection Department, Calcutta Corporation	Municipal Office		ditto
Bhar, Bhavataran	Assistant, Bengal Secretariat, Appointment Department	Writers' Buildings		Brahmo
Bhar, Bijaya Krishna	Assistant, Surgeon-General's Office, Bengal	Writers' Buildings		Hindu
Bhar, Chandra Bhusan	Assistant, Income-tax Office	3, Government Place, West		ditto
Bhar, Debendra Nath	Salesman, English Electric Co, Ld	D-4, Clive Buildings		ditto
Bhar, Gobinda Chandra, BA	Clerk, Dy Accountant-General, Posts & Telegraphs Office	7, Koilaghat Street		ditto
Bhar, Hari Gopal, MSc	Assistant, Adair Dutt & Co, Ld	5, Dalhousie Square		ditto
Bhar, H M	Engineer, Talbot & Co	Tower House, Chowringhee Square		ditto
Bhar, Jitendra Mohan	Book-keeper, Balmer, Lawrie & Co, Ld	103, Clive Street		ditto
Bhar, Kiran Chandra	Clerk, Union Insurance Society of Canton, Ld	8, Clive Street		ditto

No.	Names.	Style or calling.	Residence or place of business.	Religion.
	Bhar, Manmatha Nath	Clerk, Shaw Wallace & Co	4, Bankshall Street	Hindu
	Bhar, Panna Lal	Clerk, Shaw Wallace & Co	4, Bankshall Street	ditto
	Bhar, Purna Chandra	Assistant, Balmer, Lawrie & Co, Ld	103, Clive Street	ditto
	Bhar, Surendra Nath	Salesman, English Electric Co, Ld	D-4, Clive Buildings	ditto
	Bhar, Tarapada	Assistant, Office of the Controller of Currency	Treasury Buildings	ditto
	Bharucha, P N	Assistant, Agency Deptt, Grahams Trading Co (India), Ld	6, Lyons Range	ditto
	Bhat, Yeshwant Abaji, BCom	Assistant, Tata Iron & Steel Co, Ld	100, Clive Street	ditto
	Bhatia, D D	Reporter, P & O Banking Corporation, Ld	1, Fairlie Place	ditto
	Bhattacharji, Ahi Bhusan	Clerk, D A G P & T Office	7, Koilaghat Street	ditto
	Bhattacharji, Akshaya Kr, BSc	Clerk, Telegraph Check Office	33, Dalhousie Square, South	ditto
	Bhattacharji, Amar Nath	Assistant, Imperial Chemical Industries (India), Ld	18, Strand Road	ditto
	Bhattacharji, Amulya Charan, BA	Clerk, D A G P & T Office	7, Koilaghat Street	ditto
	Bhattacharji, Amulya Ch	Eng Overseer, Calcutta Corporation, District I	79, Cornwallis Street	ditto
	Bhattacharji, Amulya Kumar	Surveyor and Valuer, Land Acquisition Office	5, Bankshall Street	ditto

Bhattacharji, Ananta Charan	Assistant, Accountant-General's Office, Bengal	Treasury Buildings	ditto
Bhattacharji, Anil Kumar	Assistant, Bengal Secretariat, Finance Department	Writers' Buildings	ditto
Bhattacharji, Anurup Chandra	Assistant, Accountant-General's Office, Bengal	Treasury Buildings	ditto
Bhattacharji, Ashutos	Clerk, Telegraph Check Office	33, Dalhousie Square, South	ditto
Bhattacharji, Ashutos	Clerk, Shaw, Wallace & Co	4, Bankshall Street	ditto
Bhattacharji, Ashutos, BA	Assistant, Calcutta University	Senate House	ditto
Bhattacharji, Barada Kumar, BA	Assessor, Income-tax Office	3, Government Place, West	ditto
Bhattacharji, B B	Assistant, Heatly & Gresham, Ld	6, Waterloo Street	ditto
Bhattacharji, Bhabadeb, B Sc	Assistant, Accountant-General's Office, Bengal	Treasury Buildings	ditto
Bhattacharji, Bibhuti Bhusan	Clerk, C O P S Office, E I R	E I R House	ditto
Bhattacharji, Bibhuti Bhusan	Assistant, Bird & Co	1-1, Clive Street	ditto
Bhattacharji, Bhudhar Ch, MA	Lecturer, Ripon College	24, Harrison Road	ditto
Bhattacharji, Bhupendra Nath	Head Clerk (Marine), Commercial Union Assurance Co, Ld	32, Dalhousie Square	ditto
Bhattacharji, Bijaya K	Store-keeper, Calcutta Improvement Trust	5, Clive Street	ditto
Bhattacharji, Bijaya Mohan, MA	Teacher, Ripon Collegiate School	24, Harrison Road	ditto
Bhattacharji, B N	Assistant, Manton & Co	13, Old Court House Street	ditto
Bhattacharji, Birendra Nath	Assistant, Balmer, Lawrie & Co, Ld	103, Clive Street	ditto
Bhattacharji, Birendra Nath	Clerk, D A G P & T Office	7, Koilaghat Street	ditto

No.	Names.	Style or calling.	Residence or place of business.	Religion.
	Bhattacharji, Brahmeswar, MA	Assistant, Calcutta University	Senate House	Hindu
	Bhattacharji, Brajendra Nath	Audit Clerk, Ray & Ray	6, Church Lane	ditto
	Bhattacharji, Chaitanya	Sub-Head, Accounts Office, E B R	3, Kaylaghat Street	ditto
	Bhattacharji, Chandi Charan, BA	Clerk, D A G P & T Office	7, Koilaghat Street	ditto
	Bhattacharji, Charu Chandra, MSc	Assistant, Commercial Intelligence Department, India	1, Council House Street	ditto
	Bhattacharji, Charu Ch	Clerk, Telegraph Check Office	33, Dalhousie Square, South	ditto
	Bhattacharji, D, MRPS	Assistant, Bourne & Shepherd	141, Corporation Street	ditto
	Bhattacharji, Debendra Nath	Clerk, C C M's Office, E I R	E I R House	ditto
	Bhattacharji, Dhirendra Nath	Clerk, Indo Burma Petroleum Co, Ld	8, Clive Street	ditto
	Bhattacharji, Dhirendra Nath, MA	Clerk, Chief Auditor's Office, E I R	E I R House	ditto
	Bhattacharji, Dhirendra Nath	Travelling Representative, Butterworth & Co (India), Ld	Chowringhee Square	ditto
	Bhattacharji, Dinesh Chandra, MA	Lecturer, Sanskrit College	College Square	ditto
	Bhattacharji, Durgadas	Clerk, Agency Deptt, E B R	3, Kaylaghat Street	ditto
	Bhattacharji, Durgapada	Assistant, Accountant-General's Office, Bengal	Treasury Buildings	ditto
	Bhattacharji, Dwijendra Nath	Clerk, C C M's Office, E I R	E I R House	ditto
	Bhattacharji, Dwijendra Nath	Clerk, Botanical Survey of India	Indian Museum	ditto
	Bhattacharji, Girija Bh	Clerk, Telegraph Check Office	33, Dalhousie Square, South	ditto
	Bhattacharji, Gopal Chandra, M A	Lecturer, Ripon College	24, Harrison Road	ditto
	Bhattacharji, Gopendra	Clerk, D A G P & T Office	7, Koilaghat Street	ditto

Bhattacharji, Gopeshwar, BA	Clerk, D A G P & T Office	7, Koilaghat Street		ditto
Bhattacharji, Hara Kamal	Assistant Estimator, Office of the Superintending Engineer, Presidency Circle, P W D.	Writers' Buildings		ditto
Bhattacharji, Hari Charan (No I)	Clerk, Accountant-General's Office, Bengal	Treasury Buildings		ditto
Bhattacharji, Hari Charan	Supervisor, P H D, Bengal	3, Charnock Place		ditto
Bhattacharji, Haridas, MA	Assistant, Accountant-General's Office, Bengal	Treasury Buildings		ditto
Bhattacharji, Harideb	Code Clerk, Geo Henderson & Co, Ld	101-1, Clive Street		ditto
Bhattacharji, Haripada	Accounts Clerk, E B R	3, Koilaghat Street		ditto
Bhattacharji, Haripada, MA, BT	Assistant Master, Hindu School	College Square		ditto
Bhattacharji, Haripada	Assistant, Commercial Intelligence Department	1, Council House Street		ditto
Bhattacharji, Hemanta Kumar, BA	2nd Head Assistant, Bengal Secretariat, Budget Branch	Writers' Buildings		ditto
Bhattacharji, Hem Chandra, BSc	Manager, Banga Laxmi Soap Works	28, Pollock Street		ditto
Bhattacharji, Hem Chandra	Clerk, Book-Section, Port Commissioners' Office	Strand Road		ditto
Bhattacharji, Hrishikesh, MA	Clerk, D A G P & T Office	7, Koilaghat Street		ditto
Bhattacharji, J, BSc, BE CE	Assistant, Holmes, Wilson & Co, Ld	Norton Building		ditto
Bhattacharji, Jamini Kumar	Assistant, Superintending Engineer's Office, S W Circle, P W D	Treasury Buildings		ditto
Bhattacharji, Janakiballav, MA	Lecturer, Ripon College	24, Harrison Road		ditto
Bhattacharji, Janardan, BA	Clerk, Assessor's Department, Calcutta Corporation	Municipal office		ditto
Bhattacharji, Jatindra Nath, BSc	Clerk, D A G P & T Office	7, Koilaghat Street		ditto
Bhattacharji, Jibesh Chandra	Correspondence Clerk, P H D, Bengal	3, Charnock Place		ditto
Bhattacharji, Jitendra Nath	Assistant, Central Stationery Office	3, Church Lane		ditto
Bhattacharji, Jitendra Nath, BA	Assistant, Calcutta University	Senate House		ditto
Bhattacharji, Jnanendranath, MA	Teacher, Ripon College School	24, Harrison Road		ditto

No.	Names.	Style or calling.	Residence or place of business.	Religion.
	Bhattacharji, Kalidas	Shipping Clerk, Stewarts and Lloyds, Ld	6, Royal Exchange Place	Hindu
	Bhattacharji, Kali Kumar	Book-Keeper, Harrisons and Crosfield, Ld	6, Church Lane	ditto
	Bhattacharji, Kalipada, MA	Librarian, Sanskrit College	College Square	ditto
	Bhattacharji, Kamakhya Charan, BA	Assistant, Accountant-General's Office, Bengal	Treasury Buildings	ditto
	Bhattacharji, Kartik Chandra	Estimator, Office of the Executive Engineer, City Division, P W D.	Writers' Buildings	ditto
	Bhattacharji, K D	Assistant, Barry & Co	2, Fairlie Place	ditto
	Bhattacharji, Keshab Chandra	Assistant, Accountant-General's Office, Bengal	Treasury Buildings	ditto
	Bhattacharji, Khagendra Nath	Clerk, Burmah Shell Co of India, Ld	Hongkong House	ditto
	Bhattacharji, Kirti Bhusan	Clerk, C C M's Office, E I R	E I R House	ditto
	Bhattacharji, Krishna Chandra	Assistant, Bengal Secretariat, Political Department	Writers' Buildings	ditto
	Bhattacharji, Krishna Hari	Assistant, Indian Stores Department (Inspection)	6, Esplanade, East	ditto
	Bhattacharji, Krishna Kumar	Clerk, D A G P & T Office	7, Koilaghat Street	ditto
	Bhattacharji, Krishna Nath	Assistant, Excise Commissioner's Office, Bengal	Writers' Buildings	ditto
	Bhattacharji, Kshetra Mohan	Assistant, Office of the Director of Public Health, Bengal	Writers' Buildings	ditto
	Bhattacharji, Kshirode Kumar	Accountant, Ex Engineer's Office, Canals Division	Treasury Buildings	ditto
	Bhattacharji, Kshitindra, BSc	Assistant, National Insurance Co, Ld	7, Council House Street	ditto
	Bhattacharji, Kumud Kanta, BA	Assistant, Calcutta University	Senate House	ditto
	Bhattacharji, Kumudini Kanta, BA	Assistant, Accountant-General's Office, Bengal	Treasury Buildings	ditto
	Bhattacharji, Lal Mohan	Clerk, D A G P & T Office	7, Koilaghat Street	ditto
	Bhattacharji, Lalit Mohan	Clerk, D A G P & T Office	7, Koilaghat Street	ditto

Bhattacharji, Madhusudan	Clerk, Burmah Shell Co of India, Ld	Hongkong House	ditto
Bhattacharji, Mahadev, BA	Assistant, Accountant-General's Office, Bengal	Treasury Buildings	ditto
Bhattacharji, Mahesh Chandra, MSc	Joint Accountant, Unique Assurance Co, Ld	10, Canning Street	ditto
Bhattacharji, Manabendra N	Clerk, Telegraph Check Office	33, Dalhousie Square, South	ditto
Bhattacharji, Manaranjan	Clerk, C A O's Office, E I R	E I R House	ditto
Bhattacharji, Manaranjan, MA	Lecturer, Ripon College	24, Harrison Road	ditto
Bhattacharji, Manaranjan, BA	Assistant, Accountant-General's Office, Bengal	Treasury Buildings	ditto
Bhattacharji, Mritunjoy, M A	Assessing Inspector, Calcutta Corporation	Municipal Office	ditto
Bhattacharji, N	Office in-charge, A B D R & Co	25-B, Swallow Lane	ditto
Bhattacharji, Nagendra Mohan, BA	Stenographer, Adair Dutt & Co, Ld	5, Dalhousie Square	ditto
Bhattacharji, Nagendra Nath	Reader, Government of India Press	8, Hastings Street	ditto
Bhattacharji, Nalendra Nath, BA	Assistant, Accountant-General's Office, Bengal	Treasury Buildings	ditto
Bhattacharji, Nanda Lal, BE	Engineeering Supervisor, Calcutta Corporation, District I	79, Cornwallis Street	ditto
Bhattacharji, Nilmadhab	Head Clerk, Eastern Federal Union Insurance Co, Ld	9, Clive Street	ditto
Bhattachraji, Nirmal Ch	Clerk, Telegraph Check Office	33, Dalhousie Square, South	ditto
Bhattacharji, Nitya Hari	Head Assistant, Birla Brothers, Ld	8, Royal Exchange Place	ditto
Bhattacharji, Panchanan	Accounts Clerk, E B R	3, Koilaghat Street	ditto
Bhattacharji, Panchugopal, BSc, BL	Demonstrator, Scottish Church College	4, Cornwallis Square	ditto
Bhattacharji, Paresh Nath	Assistant, Accountant-General's Office, Bengal	Treasury Buildings	ditto
Bhattacharji, Pashupati, BA	Assistant Curator, Registration, Surveyor-General's Office	13, Wood Street	ditto
Bhattacharji, Patanjali, MA	Assistant, Bengali Translator's Office	Writers' Buildings	ditto

No.	Names.	Style or calling.	Residence or place of business.	Religion.
	Bhattacharji, Phani Bhushan ..	Clerk, Royal Insurance Co, Ld	26 & 27, Dalhousie Square ..	Hindu
	Bhattacharji, Prabodh Chandra, MA, BT	Assistant Master, Sanskrit Collegiate School	College Square	ditto
	Bhattacharji, Prakash Chandra ..	Assistant, Brooke Bond (India), Ld	2, Metcalfe Street	ditto
	Bhattacharji, Pramatha Nath, MA, BT	Assistant Master, Hare School	87, College Street	ditto
	Bhattacharji. Pramatha Nath, BA ..	Clerk, D A G P & T Office	7, Koilaghat Street	ditto
	Bhattacharji, Pramatha Nath ..	Stenographer, Burmah Shell Co of India, Ld	Hongkong House	ditto
	Bhattacharji, Pramatha Nath ..	Reader, Government of India Press	8, Hastings Street	ditto
	Bhattacharji, Pravas Chandra ..	Assistant, Barry & Co	2, Fairlie Place	ditto
	Bhattacharji, Pravat Chandra	Assistant, Andrew Yule & Co, Ld	8, Clive Row	ditto
	Bhattacharji, Priyanath ..	Accountant, Lal Chand & Sons	76, Lower Circular Road	ditto
	Bhattacharji, Pulin Bihari ..	Assistant, Accountant-General's Office, Bengal	Treasury Buildings	ditto
	Bhattacharji, Radha Kishore, BSc	Clerk, D A G P & T Office	7, Koilaghat Street	ditto
	Bhattacharji, Rajani Kanta ..	Book-Keeper, Anderson Wright & Co	22, Strand Road	ditto
	Bhattacharji. Rakhal Chandra ..	Clerk, D A G P & T Office	7, Koilaghat Street	ditto
	Bhattacharji, Ram Chandra ..	Surveyor, Calcutta Improvement Trust	5, Clive Street	ditto
	Bhattacharji, Ramendra Nath, MA	Head Clerk, Office of the Director of Public Instruction, Bengal	Writers' Buildings	ditto
	Bhattacharji, Ramesh Chandra, MSc	Lecturer, Ripon College	24, Harrison Road	ditto
	Bhattacharji, Ramhari ..	Assistant, Reserve Bank of India	8, Council House Street	ditto
	Bhattacharji, Ram Jiban ..	Clerk, D A G P & T Office	7, Koilaghat Street	ditto
	Bhattacharji, R R	Clerk, Office of Superintending Engineer, S W Circle ..	Treasury Buildings	ditto

Bhattacharji, Ram Sadaya	Special Inspector, E B R	3, Kaylaghat Street	ditto
Bhattacharji, Ranendra Nath	Cashier, Northern Assurance Co, Ld	7, Hare Street	ditto
Bhattacharji, Rukmini Kanta, BA	Head Clerk, Indian Stores Department (Inspection)	6, Esplanade, East	ditto
Bhattacharji, Sahayram, MA, BT	Asstt Master, Hindu School	1-B, College Square	ditto
Bhattacharji, Sarat Kumar	Assistant, Bengal Chemical & Pharmaceutical Works, Ld	31, Chittaranjan Avenue South	ditto
Bhattacharji, Saroj Kumar	Clerk, Dy Accountant-General, Posts & Telegraphs Office	7, Koilaghat Street	ditto
Bhattacharji, Satinath	Assistant, Commercial Intelligence Deptt	1, Council House Street	ditto
Bhattacharji, Satish Chandra	Assistant, Commercial Intelligence Deptt	1, Council House Street	ditto
Bhattacharji, Satya Ranjan, MSc	Assistant, Accountant-General's Office, Bengal	Treasury Buildings	ditto
Bhattacharji, Satya Sankar, BA	Assistant, Surveyor-General's Office	13, Wood Street	ditto
Bhattacharji, Shailendra	Assistant, Accountant-General's Office, Bengal	Treasury Buildings	ditto
Bhattacharji, Shaileshindu	Assistant, Accountant-General's Office, Bengal	Treasury Buildings	ditto
Bhattacharji, Shaktikanta	Accountant & Cashier, Patent Office	1, Council House Street	ditto
Bhattacharji, Shambu Sampat	R D Inspector, E B R	3, Koilaghat Street	ditto
Bhattacharji, Sharat Chandra	Assistant Printer, *Statesman*, Ld	Statesman House	ditto
Bhattacharji, Sharat Chandra	Assistant, Bird & Co	1-1, Clive Street	ditto
Bhattacharji, Sharat Kumar	Clerk, D A G P & T Office	7, Koilaghat Street	ditto
Bhattacharji, Shasanka Shekhar, BA, BT.	Head Master, Sanskrit Collegiate School	College Square	ditto
Bhattacharji, Shashi Bhusan	Clerk, Cash and Pay Section, Port Commissioners' Office	Strand Road	ditto
Bhattacharji, Shyamapada, BA	Assistant, Accountant-General's Office, Bengal	Treasury Buildings	ditto

No.	Names.	Style or calling.	Residence or place of business.	Religion.
	Bhattacharji, Shyamapada, BA	Assistant, Accounts Department, Calcutta Corporation	Municipal Office	Hindu
	Bhattacharji, Sitesh Chandra, BA	Offg Accountant, Accountant-General's Office, Bengal	Treasury Buildings	ditto
	Bhattacharji, S K	Assistant Bullion Keeper, Calcutta Mint	47, Strand Road	ditto
	Bhattacharji, S N	Assistant Bullion Keeper, Calcutta Mint	47, Strand Road	ditto
	Bhattacharji, Srinivas	Head clerk, Architectural Survey Eastern Circle	Indian Museum	ditto
	Bhattacharji, Subodh Chandra	Clerk, Royal Insurance Co, Ld	26 & 27, Dalhousie Square	ditto
	Bhattacharji, Sudhakar	Assistant, National Insurance Co, Ld	7, Council House Street	ditto
	Bhattacharji, Sudhir Kumar	Clerk, Burmah Shell Co of India, Ltd	Hongkong House	ditto
	Bhattacharji, Surendra Nath	Invoice Clerk, Geo Henderson & Co, Ld	101-1, Clive Street	ditto
	Bhattacharji, Surendra Nath	Assistant, Commercial Intelligence Department	1, Council House Street	ditto
	Bhattacharji, Surendra Nath	Assistant, Bengal Secretariat, Political Department	Writers' Buildings	ditto
	Bhattacharji, Surja Kumar	Store-keeper, Callender's Cable & Constn Co, Ld	2, Pollock Street	ditto
	Bhattacharji, Taraknath, BA	Assistant, Bengal Secretariat, Finance Department	Writers' Buildings	ditto
	Bhattacharji, Tarakdas	Stenographer, Burmah Shell Co of India, Ld	Hongkong House	ditto
	Bhattacharji, Tinkari	Clerk, Traffic Department, E B R	3, Kaylaghat Street	ditto
	Bhattacharji, Tulsi Charan	Assistant, Accountant-General's Office, Bengal	Treasury Buildings	ditto
	Bhawalka, Ram Kumar	Assistant, Andrew Yule & Co, Ld	8, Clive Row	ditto
	Bhowany, P K	Clerk, E B R	3, Koilaghat Street	ditto
	Bhowmic, Basanta Kumar	Lantern Lecturer, Education Deptt, Calcutta Corporation	Municipal Office	ditto
	Bhowmic, Nishi Kanta, MA	Clerk, D A G P & T Office	7, Koilaghat Street	ditto

Bhowmic, Sajani Kanta, BA	Clerk, D A G P & T Office	7, Koilaghat Street	ditto
Bhuia Mahamad Ali, BA	Clerk, C A's Office, E I R	E I R House	Mahomedan
Bhuiyan, Upendra Nath	Assistant, Calcutta University	Senate House	Hindu
Bhunia, M, BA	Assistant, Art Press	20, British Indian Street	ditto
Bijapurkar, Govindrao	Assistant, The Eastern Bank, Ld	9, Clive Street	ditto
Billimoria, D N	Assistant, Imperial Chemical Industries (India), Ld	18, Strand Road	Zoroastrian
Billimoria, Khurshed R	Cashier, Central Bank of India, Ld	100, Clive Street	ditto
Billimoria, Roosie Navroji	Assistant Sales Manager, Walford Transport, Ld	71-73, Park Street	ditto
Bishayee, Pasupati	Assistant, Commercial Intelligence Department	1, Council House Street	Hindu
Bishoyee, Triloke Chand	Staff Assistant, Imperial Bank of India	3, Strand Road	ditto
Bisi, Pramathanath, MA	Lecturer, Ripon College	24, Harrison Road	ditto
Biswas, Abhaya Kumar	Assistant Salesman, Greaves, Cotton & Co, Ld	60, Dharamtola Street	Christian
Biswas, A N	Clerk, Remington Rand, Inc	3, Council House Street	Hindu
Biswas, Balai Chandra	Head Clerk, Imperial Bank of India	3, Strand Road	ditto
Biswas, Basudev	Clerk, Calcutta Improvement Trust	5, Clive Street	ditto
Biswas, Bhola Nath	Clerk, D A G P & T Office	7, Koilaghat Street	ditto
Biswas, Bhupendra Kumar	Clerk, Agent's Office, E B R	3, Kaylaghat Street	ditto
Biswas Bijaya Gopal	Assistant, Calcutta University	Senate House	ditto
Biswas, Bijon Kumar	Assistant, James, Finlay & Co, Ld	1, Clive Street	ditto
Biswas, Bimalendu BA	Clerk, D A G P & T Office	7, Koilaghat Street	ditto

No.	Names.	Style or calling.	Residence or place of business.	Religion.
	Biswas, Dhirendra Nath, BSc	Assistant, Commercial Intelligence Department, India	1, Council House Street	Hindu
	Biswas, Dinabandhu	Assistant, Mercantile Marine Department	15-1, Strand Road	ditto
	Biswas, Gagan Chandra	Clerk, D A G P & T Office	7, Koilaghat Street	ditto
	Biswas, Hari Bhusan	Assistant, Office of the Inspector-General of Prisons, Bengal	Writers' Buildings	ditto
	Biswas, Haripada, BAI	Clerk, D A G P & T Office	7, Koilaghat Street	ditto
	Biswas, Hem Chandra	Accountant, Reed, Ward & Co	6, Lyons Range	ditto
	Biswas, Hemanta Kumar	Clerk, Treasury Department, Calcutta Corporation	Municipal Office	ditto
	Biswas, Hirendra Nath	Assistant, Commercial Intelligence Deptt	1, Council House Street	ditto
	Biswas, Jamini Kanta	Assistant, Accountant-General's Office, Bengal	Treasury Buildings	ditto
	Biswas, Jatindra Nath	Clerk, Marine Department, South British Insurance Co, Ld	5, Clive Street	ditto
	Biswas, Jatindra Nath	Clerk, D A G P & T Office	7, Koilaghat Street	ditto
	Biswas, J D	Clerk, Jardine, Skinner & Co	4, Clive Row	Christian
	Biswas, Jogendra Nath	Clerk, C A O's Office, E I R	E I R House	Hindu
	Biswas, Jogesh Chandra	Cashier, Sinclair, Murray & Co, Ld	6, Royal Exchange Place	ditto
	Biswas, Kalipada, MA	Assistant, Office of the Controller of Currency	Treasury Buildings	ditto
	Biswas, Kartic Chandra	Assistant, Accountant-General's Office, Bengal	Treasury Buildings	ditto
	Biswas, Krishna Chandra, MA	Assessing Officer, Calcutta Corporation	Municipal Office	ditto
	Biswas, Manindra Lal	Chief Store-Keeper (Photo-Litho), Survey of India	14, Wood Street	Christian
	Biswas, M L	Assistant, Mackinnon, Mackenzie & Co	8, Strand Road	ditto
	Biswas, Mohini Mohan	Clerk, American Express Co, Inc	14, Government Place, East	Hindu

Biswas, M R	Secretary, Boys' Branch, Y M C A	86, College Street	Christian
Biswas, Nagendra Chandra	Assistant, Martin & Co	12, Mission Row	Hindu
Biswas, Phani Bhusan	Accounts Clerk, E B R	3, Koilaghat Street	ditto
Biswas, Prafulla Kumar	Clerk, Jardine, Skinner & Co	4, Clive Row	Christian
Biswas, Prakash Chandra, BA	Assessing Inspector, Calcutta Corporation	Municipal Office	Hindu
Biswas, Pramode Bandhu	Clerk, Traffic Deptt, E B R	3, Koilaghat Street	ditto
Biswas, Pulin Bihari	Clerk, C A's Office, E I R	E I R House	ditto
Biswas, Rabindra Nath	Assistant, Moran & Co, Ld	4, Lyons Range	ditto
Biswas, Ramesh Chandra	Assistant, Octavius, Steel & Co, Ld	14, Old Court House Street	ditto
Biswas, Sanat K, Bcom	Clerk, D A G P & T Office	7, Koilaghat Street	ditto
Biswas, Sanyasi Charan	Clerk, Surveyor General's Office	13, Wood Street	ditto
Biswas, Saroj Kumar	Clerk, Telegraph Check Office	33, Dalhousie Square, South	ditto
Biswas, Saroj Nath, BA	Assistant, Accounts Department, Calcutta Corporation	Municipal Office	ditto
Biswas, Satish Chandra	Assistant, Macneill & Co	2, Fairlie Place	ditto
Biswas, Satya Ranjan	Assistant, Accountant-General's Office, Bengal	Treasury Buildings	ditto
Biswas, Satya Ranjan	Assistant, Bird & Co	1-1, Clive Street	ditto
Biswas, Shachindra Nath	Assistant, Moran & Co, Ld	4, Lyons Range	ditto
Biswas, Shailendra Nath, BA	Assistant Calcutta University	Senate House	ditto
Biswas, Shasi Bhusan	Clerk, D A G P & T Office	7, Koilaghat Street	ditto
Biswas, Shashi Bhusan	Examiner of Stores, Indian Stores Department (Inspection)	6, Esplanade, East	ditto

No.	Names.	Style or calling.	Residence or place of business.	Religion.
	Biswas, Shashi Bhusan	Assistant, Brooke Bond (India), Ld	2, Metcalfe Street	Hindu
	Biswas, S N	Stenographer, Reed, Ward & Co	6, Lyons Range	ditto
	Biswas, S N	Assistant, Guest, Keen, Williams, Ld	7, Council House Street	ditto
	Biswas, Subodh Chandra, BA	Assistant Accountant, Lighting, Calcutta Corporation	Municipal Office	ditto
	Biswas, T	Assistant, Mackinnon, Mackenzie & Co	16, Strand Road	Christian
	Biswas, Tarak Nath	Clerk, D A G P & T Office	7, Koilaghat Street	Hindu
	Budhraj, A S	Claims Inspector, Traffic Deptt, E B R	3, Koilaghat Street	ditto
	Bux, Mowla (Sheikh)	Clerk, Accountant-General's Office, Bengal	Treasury Buildings	Mahomedan
	C			
	Chakravarti, Abhaya Charan	Clerk, D A G P & T Office	7, Koilaghat Street	Hindu
	Chakravarti, Akshaya K	Clerk, Sun Life of Canada	12, Dalhousie Square, East	ditto
	Chakravarti, Akshaya Kumar	Assistant, Agri and Ind Department, Bengal	Writers' Buildings	ditto
	Chakravarti, Amrita Lal	Clerk, Turner, Morrison & Co, Ld	6, Lyons Range	ditto
	Chakravarti, Ananta Nath	Accounts Clerk, E B R	3, Koilaghat Street	ditto
	Chakravarti, Anath Bandhu	Clerk, Imperial Bank of India	3, Strand Road	ditto
	Chakravarti, Anil Kumar, MA	Assistant, Commercial Intelligence Department, India	1, Council House Street	ditto
	Chakravarti, Anukul Chandra	Assistant, Macneill & Co	2, Fairlie Place	ditto
	Chakravarti, Ashutos	Assistant, Senda & Co (India), Ld	135, Canning Street	ditto
	Chakravarti, B	Accountant, John, Dickinson & Co, Ld	6, Clive Row	ditto
	Chakravarti, Bhabendra Nath	Chief Clerk, Martin & Co	12, Mission Row	ditto

Chakravarti, Bhuban Mohan	Assistant, Office of the Director of Public Health, Bengal	Writers' Buildings	ditto
Chakravarti, Bhuban Mohan	Assistant, Accountant-General's Office, Bengal	Treasury Buildings	ditto
Chakravarti, Bhupati Charan	Assistant, Balmer, Lawrie & Co, Ld	103, Clive Street	ditto
Chakravarti, Bhupati Nath	Assistant, Office of the Director of Public Instruction, Bengal	Writers' Buildings	ditto
Chakravarti, Bhupendra Narayan	Assistant, Accounts Department, Calcutta Corporation	Municipal Office	ditto
Chakravarti, Bhupendra Nath	Clerk, D A G P & T Office	7, Koilaghat Street	ditto
Chakravarti, Bibhuti Bhusan, BE, CE	Engineer, Holmes, Wilson & Co, Ld	Norton Buildings	ditto
Chakravarti, Bibhuti Bhusan, BL	Clerk, C E's Office, Calcutta Corporation	Municipal Office	ditto
Chakravarti, Bidhu Bhusan	Assistant, Surgeon-General's Office, Bengal	Writers' Buildings	ditto
Chakravarti, Bijaya Krishna	Assistant, Price, Waterhouse, Peat & Co	B-4, Clive Buildings	ditto
Chakravarti, Chandranan	Clerk, D A G P & T Office	7, Koilaghat Street	ditto
Chakravarti, Charu Chandra, MA	Teacher, Ripon Collegiate School	24, Harrison Road	ditto
Chakravarti, Charu Chandra, BA	Assistant, Accountant-General's Office, Bengal	Treasury Buildings	ditto
Chakravarti, Charu Chandra	Assistant, Ludlow Jute Co, Ld	7, Royal Exchange Place	ditto
Chakravarti, Charu Chandra, BA	Assistant, Commercial Intelligence Department, India	1, Council House Street	ditto
Chakravarti, Chintaharan, MA	Lecturer, Bethune College	181, Cornwallis Street	ditto
Chakravarti, Dasarathi	Clerk, Telegraph Check Office	33, Dalhousie Square, South	ditto
Chakravarti, Dharma Das	Head Clerk, Office of the Deputy Director of Agriculture, Western Circle, Bengal.	Writers' Buildings	ditto
Chakravarti, Dharma Das B.A.	Clerk, D A G P & T Office	7, Koilaghat Street	ditto
Chakravarti, Dukhiram	Sub-head, Accounts Office, E B R	3, Kaylaghat Street	ditto

No.	Names.	Style or calling.	Residence or place of business.	Religion.
	Chakravarti, Durga Charan	Clerk, D A G P & T Office	7, Koilaghat Street	Hindu
	Chakravarti, Durgadas	Assistant, Accounts Department, Calcutta Corporation	Municipal Office	ditto
	Chakravarti, Gopal Ch	Clerk, D A G P & T Office	7, Koilaghat Street	ditto
	Chakravarti, Gostha Bihari	Export Clerk, Lipton, Ld	9, Weston Street	ditto
	Chakravarti, Goswamidas	Assistant, Ludlow Jute Co, Ld	7, Royal Exchange Place	ditto
	Chakravarti, Hari Charan	License Inspector, Calcutta Corporation	Municipal Office	ditto
	Chakravarti, Hari Mohan	Clerk, D A G P & T Office	7, Koilaghat Street	ditto
	Chakravarti, Harisadhan	Assistant, Accountant-General's Office, Bengal	Treasury Buildings	ditto
	Chakravarti, Hemendra Nath	Surveyor, Calcutta Improvement Trust	5, Clive Street	ditto
	Chakravarti, Hirendranath	Assistant, Excise Commissioner's Office, Bengal	Writers' Buildings	ditto
	Chakravarti, H N	Clerk, C E S C, Ld	Victoria House	ditto
	Chakravarti, H N	Clerk, D A G P & T Office	7, Koilaghat Street	ditto
	Chakravarti, Indra Mohan, BA	Assistant, Accountant-General's Office, Bengal	Treasury Buildings	ditto
	Chakravarti, Jatindra Chandra	Salesman, Hoare, Miller & Co, Ld	5, Fairlie Place	ditto
	Chakravarti, Jaya Gopal	Assistant, Mercantile Marine Department	15-1, Strand Road	ditto
	Chakravarti, Jibaneshwar, MA	Divisional Accountant, Accountant-General's Office, Bengal	Treasury Buildings	ditto
	Chakravarti, Jitendra Kumar	Lecturer, Sanskrit College	College Square	ditto
	Chakravarti, Jitendra Nath	Clerk, C A O's Office, E I R	E I R House	ditto
	Chakravarti, Jitendra, BA	Assessor, Income-tax Office	3, Government Place, West	ditto

Chakravarti, Jitendra Nath	Surveyor and Valuer, Land Acquisition Office	5, Bankshall Street		ditto
Chakravarti, Jnanendra Nath	Clerk, Telegaph Check Office	33, Dalhousie Square, South		ditto
Chakravarti, Jugal Kishore	Clerk, Imperial Bank of India	3, Strand Road		ditto
Chakravarti, Jyotish Chandra, BA	Assistant, Board of Revenue, Bengal	Writers' Buildings		ditto
Chakravarti, Jyotish Chandra, BA	Clerk, Telegraph Check Office	33, Dalhousie Square, South		ditto
Chakravarti, Jyotish Chandra	Building Inspector, Calcutta Corporation	Municipal Office		ditto
Chakravarti, Kailas Chandra	Demonstrator, Presidency College	86-1, College Street		ditto
Chakravarti, Kalachand	Clerk, Agent's Office, E I R	E I R House		ditto
Chakravarti, Kalipada	Clerk, Martin & Co	12, Mission Row		ditto
Chakravarti, Kalipada	Clerk, Burmah Shell Co of India, Ld	Hongkong House		ditto
Chakravarti, Kalipada	Stenographer, Hoare, Miller & Co, Ld	5, Fairlie Place		ditto
Chakravarti, Kaliprasad	Clerk, Imperial Bank of India	3, Strand Road		ditto
Chakravarti, Kanailal	Clerk, Martin & Co	12, Mission Row		ditto
Chakravarti, Kripasindhu	Assistant, Price, Waterhouse, Peat & Co	B-4, Clive Buildings		ditto
Chakravarti, Kshtitish Ch	Accountant, Presidency College	86-1, College Street		ditto
Chakravarti, Lakshmi Narayan	Clerk, Harrisons and Crosfield, Ld	6, Church Lane		ditto
Chakravarti, Mahendranath	Assistant, J Thomas & Co	8, Mission Row		ditto
Chakravarti, Makhan Lal	Head Clerk, Income-tax Office	1, Hare Street		ditto
Chakravarti, Makhan Lal	Assistant, Accountant-General's Office, Bengal	Treasury Buildings		ditto
Chakravarti, Mani Mohan, BSc	Assistant, Accountant-General's Office, Bengal	Treasury Buildings		ditto

No.	Names.	Style or calling.	Residence or place of business.	Religion.
	Chakravarti, Manindra Mohan	Assistant, Bengal Secretariat, Marine Department	Writers' Buildings	Hindu
	Chakravarti, Manmatha Nath	Accountant, Begg, Dunlop & Co, Ld	2, Hare Street	ditto
	Chakravarti, Matilal, BA	Assistant, Office of the I-G of Police	Writers' Buildings	ditto
	Chakravarti, Mrityunjaya	Sub-Head, C A O's Office, E I R	E I R House	ditto
	Chakravarti, Mrityunjaya	Assistant, Government of India Press	8, Hastings Street	ditto
	Chakravarti, N C, MA	Lecturer, Govt Commercial Institute	11, Hastings Street	ditto
	Chakravarti, Nagendra Nath	Accountant, Norwich Union Fire Insurance Society, Ld	8, Old Court House Street	ditto
	Chakravarti, Nagendra Nath	Clerk, C O S's Office, E I R	E I R House	ditto
	Chakravarti, Nanda Lal	Clerk, Burmah Shell Co of India, Ld	Hongkong House	ditto
	Chakravarti, Nani Gopal	Demonstrator, Presidency College	86-1, College Street	ditto
	Chakravarti, Nani Lal	Clerk, D A G P & T Office	7, Koilaghat Street	ditto
	Chakravarti, Nanilal	Assistant, Accountant-General's Office, Bengal	Treasury Buildings	ditto
	Chakravarti, Narendra Chandra	Outfall Leveller, Calcutta Corporation	Municipal Office	ditto
	Chakravarti, Narendra N	Clerk, Telegraph Check Office	33, Dalhousie Square, South	ditto
	Chakravarti, Nemai Charan, BA	Assistant, Accountant--General's Office, Bengal	Treasury Buildings	ditto
	Chakravarti, Nilmani	Assistant, Accountant-General's Office, Bengal	Treasury Buildings	ditto
	Chakravarti, Niramaya, BL	Assistant, Accountant-General's Office, Bengal	Treasury Buildings	ditto
	Chakravarti, Nirmal Chandra	Security Clerk, National Bank of India, Ld	104, Clive Street	ditto
	Chakravarti, Nishi Bhusan	Assistant, Office of the Inspector-General of Prisons, Bengal	Writers' Buildings	ditto

Chakravarti, Nishi Kanta	Clerk, D A G P & T Office	7, Koilaghat Street	ditto
Chakravarti, N N	Assistant, Barry & Co	2, Fairlie Place	ditto
Chakravarti, Nripendra Kumar	Assistant, Accountant-General's Office, Bengal	Treasury Buildings	ditto
Chakravarti, Nrittya Gopal	Clerk, Burmah Shell Co of India, Ld	Hongkong House	ditto
Chakravarti, Panchanan	Assistant, Bird & Co	1-1, Clive Street	ditto
Chakravarti, Pashupati	Clerk, Calcutta Improvement Trust	5, Clive Street	ditto
Chakravarti, Paresh Chandra, BA	Stenographer, Talbot & Co	Tower House	ditto
Chakravarti, Phani Bhusan, BE	Overseer, Calcutta Improvement Trust	5, Clive Street	ditto
Chakravarti, Prabodh Chandra, MSc	Assistant Accountant-Generals Office, Bengal,	Treasury Buildings	ditto
Chakravarti, Prabodh Chandra	Clerk, Burmah Shell Co of India, Ld	Hongkong House	ditto
Chakravarti, Prafulla Chandra	Clerk, Agent's Office, E I R	E I R House	ditto
Chakravarti, Prafulla Kumar	Stenographer, Burmah Shell Co of India, Ld	Hongkong House	ditto
Chakravarti, Prafulla Kumar	Head Clerk, Traffic Department, E B R	3, Kaylaghat Street	ditto
Chakravarti, Pramatha Mohan	Assistant, Office of the Director of Public Health, Bengal	Writers' Buildings	ditto
Chakravarti, Pran Krishna	Clerk, D A G P & T Office	7, Koilaghat Street	ditto
Chakravarti, Pravat Chandra	Assistant, Office of the Director of Industries, Bengal	40-1A, Free School Street	ditto
Chakravarti, Purna Chandra	Accountant, Begg, Dunlop & Co, Ld	2, Hare Street	ditto
Chakravarti, Purna Chandra	Assistant, Accountant-General's Office, Bengal	Treasury Buildings	ditto
Chakravarti, Radhikaranjan	Assistant, Calcutta University	Senate House	ditto
Chakravarti, R B	Clerk, Ford, Rhodes Thornton & Co	Tower House Chowringhee Square	ditto

No.	Names.	Style or calling.	Residence or place of business.	Religion.
	Chakravarti, Rajani Mohan, BL	Assessing Inspector, Calcutta Corporation	Municipal Office	Hindu
	Chakravarti, Rajendra Chandra, BA	Assistant, Board of Revenue, Bengal	Writers' Buildings	ditto
	Chakravarti, Rajendra Kumar	Head Clerk, Office of the Inspector of Schools, Presidency Division	40-1A, Free School Street	ditto
	Chakravati, Rajendra Nath, BA	Assistant, Martin & Co	12, Mission Row	ditto
	Chakravarti, Rajendra Nath	Clerk, Calcutta Improvement Trust	5, Clive Street	ditto
	Chakravarti, Ramani Mohan, BA	Stenographer, Bengali Translator's Office	Writers' Buildings	ditto
	Chakravarti, Ramaprasad	Assistant, Accountant-General's Office, Bengal	Treasury Buildings	ditto
	Chakravarti, Ramendra Nath	Head Assistant Teacher, Government School of Art, Calcutta	28, Chowringhee	ditto
	Chakravarti, Ramesh Chandra, BA	Assistant, Martin & Co	12, Mission Row	ditto
	Chakravarti, Rameshwar	Assistant, Burn & Co, Ld	12, Mission Row	ditto
	Chakravarti, Ramkrishna, MA	Assistant, Calcutta University	Senate House	ditto
	Chakravarti, Rasik Lal	Head Clerk, Income-tax Office	1, Hare Street	ditto
	Chakravarti, Rebati Raman	Cashier, Guaranteed Relief Syndicate, Ld	14, Clive Street	ditto
	Chakravarti, R R	Assistant, Oriental Government Security Life Assurance Co, Ld	2, Clive Row	ditto
	Chakravarti, Sanat Kumar	Assistant, Andrew Yule & Co, Ld	8, Clive Row	ditto
	Chakravarti, Sarat Chandra	Clerk, D A G P & T Office	7, Koilaghat Street	ditto
	Chakravarti, Satish Chandra	Accountant, Map Record & Issue Office, Survey of India	13, Wood Street	ditto
	Chakravarti, Satyaprasad	Assistant, Accountant-General's Office, Bengal	Treasury Buildings	ditto
	Chakravarti, Satyendra Nath	Sr. Accountant, Accountant-General's Office, Bengal	Treasury Buildings	ditto

Chakravarti, Sitangsu Shekhar	Asstt Superintendent, C O P S's Office, E I R	E I R House	ditto
Chakravarti, Shitaldas, BA	Assistant Accountant-General's Office, Bengal	Treasury Buildings	ditto
Chakravarti, Shyamapada	Clerk, Traffic Department, E B R	3, Kaylaghat Street	ditto
Chakravarti, Shyamapada, BSc	Assistant, Accountant-General's Office, Bengal	Treasury Buildings	ditto
Chakravarti, Subodh Kumar, MSc	Professor, City College	102-1, Amherst Street	ditto
Chakravarti, Sudhindra Nath BA	Clerk, D A G P & T Office	7, Koilaghat Street	ditto
Chakravarti, Sudhir Chandra	Assistant, Begg, Dunlop & Co, Ld	2, Hare Street	ditto
Chakravarti, Sudhirendu, BCom	Assistant, Accountant-General's Office, Bengal	Treasury Buildings	ditto
Chakravarti, Surendra Nath	Surveyor and Valuer, Land Acquisition Office	5, Bankshall Street	ditto
Chakravarti, Surendra Nath	Superintendent of Textile Demonstrations, Industries Department, Bengal.	40-1A, Free School Street	ditto
Chakravarti, Taracharan	Assistant, Accountant-General's Office, Bengal	Treasury Buildings	ditto
Chakravarti, Tara Kumar	Draftsman, Surveyor-General's Office	13, Wood Street	ditto
Chakravarti, Tarak Chandra	Traveller, Blackie & Sons (India), Ld	285-11, Bowbazar Street	ditto
Chakravarti, Tarini Prasad, BA	Assistant, Accountant-General's Office, Bengal	Treasury Buildings	ditto
Chakravarti, Triguna Ch, BA	Assistant, Govt of India Press	8, Hastings Street	ditto
Chakravarti, Tulsi	Assistant, Paterson Engineering Co (India), Ld	2, Dalhousie Square	ditto
Chakravarti, Uma Kali	Stenographer, Office of H.M's Trade Commissioner in India	4, Fairlie Place	ditto
Chakravarti, Upendra Nath	Assistant, P & O Banking Corporation, Ld	1, Fairlie Place	ditto
Chakravarti, Upendra Nath	Clerk, Elec & Mech, G E's Office, Calcutta Division, Fort William	Fort William	ditto
Champati, Binode Bihari	Clerk, Accounts Office, E I R	E I R House	ditto

No.	Names.	Style or calling	Residence or place of business.	Religion.
	Chanda. Binode Bihari, BA	Assistant, Government of India Press	8, Hastings Street	Hindu
	Chanda, Tara Prasanna	Assistant, Accounts Deptt, Calcutta Corporation	Municipal Office	ditto
	Chandra, Amarendra Nath	Clerk, C A O's Office, E I R	E I R House	ditto
	Chandra. Ashutos	Assistant, Balmer, Lawrie & Co, Ld	103, Clive Street	ditto
	Chandra, Balai Lal	Hd Assistant, Juggilal Kamlapat	76, Cotton Street	ditto
	Chandra, Bipin Krishna	Assistant, Accountant-General's Office, Bengal	Treasury Buildings	ditto
	Chandra, Gopal Chandra	Clerk, C A's Office, E I R	E I R House	ditto
	Chandra, Gour Hari	Assistant, Commercial Intelligence Deptt India	1, Council House Street	ditto
	Chandra, Haradhone BA	Clerk, D A G P & T Office	7, Koilaghat Street	ditto
	Chandra, Hari Krishna	Assistant Estate Superintendent, Port Commissioners' Office	Strand Road	ditto
	Chandra, Kanailal	Clerk, Gillanders, Arbuthnot & Co	8, Clive Street	ditto
	Chandra, Manilal	Accountant, Scottish Church College	4, Cornwallis Square	Christian
	Chandra, Narendra Kumar	Accounts Clerk, E B R	3, Koilaghat Street	Hindu
	Chandra, Narendra Nath	Accountant, Phœnix Assurance Co, Ld	28, Dalhousie Square	ditto
	Chandra, Nityananda	Clerk, D A G P & T Office	7, Koilaghat Street	ditto
	Chandra, Rajendra Kumar	Clerk, Imperial Bank of India	3, Strand Road	ditto
	Chatarji, Abanikanta	Assistant, Public Health Department, Bengal	Writers' Buildings	ditto
	Chatarji, Aditya Narayan	Clerk, Jardine, Skinner & Co	4, Clive Row	ditto
	Chatarji, A K	Inspector, Oriental Govt Security Life Assurance Co, Ltd	2, Clive Row	ditto
	Chatarji, Akshaya Kumar	Staff clerk, Bengal Telephone Corporation, Limited	8, Hare Street	ditto

Chatarji, Amal Pada	Building Inspector, Calcutta Corporation	Municipal Office	ditto
Chatarji, Amarendra Nath	Assistant, Burn & Co, Ld	12, Mission Row	ditto
Chatarji, Ambuj Lal	Assistant, Office of the Inspector-General of Registration, Bengal	Writers' Buildings	ditto
Chatarji, Amulya Krishna	Assistant, Balmer, Lawrie & Co, Ld	103, Clive Street	ditto
Chatarji, A N	Asstt Engineer, G E C (India), Ld	Magnet House, Central Avenue South	ditto
Chatarji, Ashutos	Clerk, Burmah Shell Co of India, Ld	Hongkong House	ditto
Chatarji, Ashutos	Assistant, Bengal Secretariat, Judicial Department	Writers' Buildings	ditto
Chatarji, Ashwini Kumar	Clerk, Gillanders, Arbuthnot & Co	8, Clive Street	ditto
Chatarji, Atul Krishna	Assistant, Bengal Chamber of Commerce	2, Clive Street	ditto
Chatarji, Atul Krishna, BA	Accounts clerk, E B R	3, Koilaghat Strreet	ditto
Chatarji, Baidya Nath, BA	Clerk, D A G P & T Office	7, Koilaghat Street	ditto
Chatarji, B B	Assistant Resident Secretary, Manufacturers Life Insurance Co	26, Dalhousie Square	ditto
Chatarji, Balai Chand	Clerk, Assessor's Department, Calcutta Corporation	Municipal Office	ditto
Chatarji, Banbehary	Stenographer, Burmah Shell Co of India, Ld	Hongkong House	ditto
Chatarji, Bankim Chandra (No. I)	Clerk, Engineer's Office, E B R	3, Kaylaghat Street	ditto
Chatarji, Bankim Chandra	Assistant, Office of the I-G of Police	Writers' Buildings	ditto

No.	Names.	Style or calling.	Residence or place of business.	Religion
	Chatarji, Barindra Nath, MSc	Food Inspector, Calcutta Corporation	79, Cornwallis Street	Hindu
	Chatarji, Basanta Kumar	Clerk, Burmah Shell Co of India, Ld	Hongkong House	ditto
	Chatarji, Basudeb	Assistant, Office of the Director of Industries, Bengal	40-1A, Free School Street	ditto
	Chatarji, Bhababhuti	Clerk, Telegraph Check Office	33, Dalhousie Square, South	ditto
	Chatarji, Bhabani Mohan, MA	Sub-Head, C A O's Office, E I R	E I R House	ditto
	Chatarji, Bhola Nath, BA	Assistant, Commercial Intelligence Deptt	1, Council House Street	ditto
	Chatarji, Bhubaneshwar	Assistant, Accountant-General's Office, Bengal	Treasury Buildings	ditto
	Chatarji, Bhupati Bhusan	Stenographer, Bengal Secretariat, Finance Department	Writers' Buildings	ditto
	Chatarji, Bhupati Nath	Stenographer, Zoological Survey of India	Indian Museum	ditto
	Chatarji, Bhupati Nath	Accounts Clerk, E B R	3, Koilaghat Street	ditto
	Chatarji, Bhupendra Nath	Inspector of Lightning Conductors, Superintending Engineer's Office, Electrical Circle, Bengal.	Writers' Buildings	ditto
	Chatarji, Bhupendra Nath	Stenographer, Bengal Secretariat, Finance Department	Writers' Buildings	ditto
	Chatarji, Bibhuti Bhusan	Clerk, Imperial Bank of India	3, Strand Road	ditto
	Chatarji, Bibhuti Bhusan	Assistant, Accountant-General's Office, Bengal	Treasury Buildings	ditto
	Chatarji, Bibhuti Bhusan	Accountant, Calcutta University	Senate House	ditto

Chatarji, Bijaya Krishna	Sub-Head, Accounts Office, E B R	3, Kaylaghat Street	ditto
Chatarji, Bijaya Krishna	Clerk, C. A. O's Office, E I R	E I R House	ditto
Chatarji, Bijaya Lal	Clerk, Telegraph Check Office	33, Dalhousie Square, South	ditto
Chatarji, Binaya Krishna	Head Clerk, Ewing & Co, Ld	4, Clive Row	ditto
Chatarji, Binaya Krishna	Assistant, Commercial Intelligence Department	1, Council House Street	ditto
Chatarji, Bireswar, BA	Assistant (Legal), Sir Sarupchand Hukumchand & Co	30, Clive Street	ditto
Chatarji, Bishweswar	Assistant, Mercantile Marine Department	15-1, Strand Road	ditto
Chatarji, B N	Clerk, Calcutta Mint	47, Strand Road	ditto
Chatarji, Chandicharan	Clerk, C C M's Office, E I R	E I R House	ditto
Chatarji, Chandra Kanta	Cashier, Nestle & Anglo-Swiss Condensed Milk (Export) Co, Ld	9-A, Clive Street	ditto
Chatarji, Charu Chandra	Clerk, Imperial Bank of India	3, Strand Road	ditto
Chatarji, Chuni Lal	Clerk, Assessors' Department, Calcutta Corporation	Municipal Office	ditto
Chatarji, Chuni Lal	Assistant, Bird & Co	1-1, Clive Street	ditto
Chatarji, Dakshina Kumar	Clerk, Licensed Measurers Department	2, Clive Street	ditto
Chatarji, Debendra Nath	Assistant, Nestle and Anglo-Swiss Condensed Milk (Export) Co, Ld.	9-A, Clive Street	ditto
Chatarji, Debendra Nath	Clerk, Telegraph Check Office	33, Dalhousie Square, South	ditto

No.	Names.	Style or calling.	Residence or place of business.	Religion.
	Chatarji, Debendra Nath	Assistant, Calcutta University	Senate House	Hindu
	Chatarji, Dhirendra Nath	Assistant, Accountant-General's Office, Bengal	Treasury Buildings	ditto
	Chatarji, Dhirendra Nath, B com	Assistant, Office of the Controller of Currency	Treasury Buildings	ditto
	Chatarji, Dhirendra Nath	Supervisor, Mathematical Instrument Office	15, Wood Street	ditto
	Chatarji, Dhirendra Nath	Clerk, D A G P & T Office	7, Koilaghat Street	ditto
	Chatarji, Dhirendra Nath	Accountant, Paterson Engineering Co (India), Ld	2, Dalhousie Square	ditto
	Chatarji, Durgadas	Assistant, Andrew Yule & Co, Ld	8, Clive Row	ditto
	Chatarji, Durgadas	Assistant, N R Roy & Co	7, Lyons Range	ditto
	Chatarji, Dwijendra Nath	Head Clerk, W T Henley's Telegraph Works Co, Ld	Old Court House Corner	ditto
	Chatarji, Dyoti Nath	Assistant, Andrew Yule & Co, Ld	8, Clive Row	ditto
	Chatarji, Ganesh	Clerk, Ford, Rhodes, Thornton & Co	Tower House	ditto
	Chatarji, Ganesh Chandra	Clerk, C A O's Office, E I R	E I R House	ditto
	Chatarji, Girindra Mohan, BA	Clerk, Calcutta Corporation, D E I	79, Cornwallis Street	ditto
	Chatarji, Harendrakumar	Clerk, C O S's Office, E I R	E I R House	ditto
	Chatarji, Hareshwar	Clerk, D A G P & T Office	7, Koilaghat Street	ditto

Chatarji, Haribilas	Assistant, Bengal Secretariat, Revenue Department	Writers' Buildings	ditto
Chatarji, Haribilas	Eng. Overseer, Calcutta Corporation	79, Cornwallis Street	ditto
Chatarji, Hari Charan	Assistant, Commercial Intelligence Department	1, Council House Street	ditto
Chatarji, Haridhan	Assistant, Calcutta University	Senate House	ditto
Chatarji, Haridhan	Assistant, Mackinnon, Mackenzie & Co	16, Strand Road	ditto
Chatarji, Hari Gopal, MA	Assistant, Calcutta University	Senate House	ditto
Chatarji, Harihar, BA	Assistant, Survey of India	13, Wood Street	ditto
Chatarji, Haripada	Assessor, Income-tax Office	3, Government Place, West	ditto
Chatarji, Haripada	Clerk, Royal Insurance Co, Ld	26 & 27, Dalhousie Square	ditto
Chatarji, Haripada	Assistant, Accountant-General's Office, Bengal	Treasury Buildings	ditto
Chatarji, Hari Santosh, BA	Clerk, Assessor's Department, Calcutta Corporation	Municipal Office	ditto
Chatarji, Hemanta Kumar, BA	Assistant, Board of Revenue, Bengal	Writers' Buildings	ditto
Chatarji, Hemendra Nath, MA, BL	Assistant, Calcutta University	Senate House	ditto
Chatarji, Hirendra Nath	Head Clerk, Traffic Department, E B R	3, Kaylaghat Street	ditto
Chatarji, Hirendra Nath, MA	Assistant, Reserve Bank of India	8, Council House Street	ditto
Chatarji, Hirendra Nath, BA	Assistant, Commercial Intelligence Department, India	1, Council House Street	ditto

No.	Names	Style or calling.	Residence or place of business.	Religion.
	Chatarji, Hrisikesh	Assistant, Mackinnon, Mackenzie & Co	16, Strand Road	Hindu
	Chatarji, Indra Bhusan	Book-keeping Clerk, Stewarts and Lloyds, Ld	6, Royal Exchange Place	ditto
	Chatarji, Indubhushan	Stenographer, Bengal Chamber of Commerce	2, Clive Street	ditto
	Chatarji, Indubhusan	Assistant, Excise Commissioner's Office, Bengal	Writers' Buildings	ditto
	Chatarji, Jaladhar	Assistant, Surgeon-General's Office, Bengal	Writers' Buildings	ditto
	Chatarji, Janaki Nath, MA	Superintendent, T M's Department, Port Commissioners Office	Strand Road	ditto
	Chatarji, Jatindra Nath, BA	Asistant, Reserve Bank of India	8, Council House Street	ditto
	Chatarji, Jatindranath, MA	Clerk, D A G P & T Office	7, Koilaghat Street	ditto
	Chatarji, Jibandhan	Clerk, Turner, Morrison & Co, Ld	6, Lyons Range	ditto
	Chatarji, Jiban Krishna	Assistant, Calcutta University	Senate House	ditto
	Chatarji, Jiban Krishna	Assistant, Imperial Chemical Industries (India), Ld	18, Strand Road	ditto
	Chatarji, Jiban Lal	Salesman, Dodge and Seymour, Ld	Tower House, Chowringhee Square	ditto
	Chatarji, Jitendra Nath, BA	Assistant, Accountant-General's Office, Bengal	Treasury Buildings	ditto
	Chatarji, Jitendra Nath	Assistant, Excise Commissioner's Office, Bengal	Writers' Buildings	ditto
	Chatarji, Jitendra Nath	Assistant, Brooke Bond (India), Ld	2, Metcalfe Street	ditto

Chatarji, Jnanendra Lal ..	.. Assistant, Education Department, Bengal Secretariat	.. Writers' Buildings ..	.. ditto
Chatarji, Jogesh Chandra	.. Assistant, Burn & Co, Ld	.. 12, Mission Row ..	.. ditto
Chatarji, Jyotirmaya, MSc	.. Demonstrator, Scottish Church College	.. 4, Cornwallis Square ..	.. ditto
Chatarji, Jyotish Chandra	.. Stenographer, Longmans Green & Co, Ld ..	.. 6, Old Court House Street	.. ditto
Chatarji, Jyotish Chandra	.. Clerk, D A G P & T Office	.. 7, Koilaghat Street ..	.. ditto
Chatarji, Jyotish Chandra	.. Assistant, Central Stationery Office	.. 3, Church Lane ..	.. ditto
Chatarji, Kali Charan ..	.. Assistant Cashier, Sun Life of Canada	.. 12, Dalhousie Square, East	.. ditto
Chatarji, Kali Charan ..	.. Assistant, Calcutta University	.. Senate House ..	.. ditto
Chatarji, Kalikrishna ..	.. Clerk, C O P S Office, E I R	.. E I R House ..	.. ditto
Chatarji, Kalipada ..	.. Section Superintendent, Engineer's Office, E B R ..	.. 3, Kaylaghat Street ..	.. ditto
Chatarji, Kamala Charan	.. Assistant, Office of the Controller of Currency ..	.. Treasury Buildings ..	.. ditto
Chatarji, Kanak Krishna	.. Assistant, Calcutta University	.. Senate House ..	.. ditto
Chatarji, K C ..	.. Manager, Sen & Pandit	.. Mercantile Buildings ..	.. ditto
Chatarji, K C ..	.. Assistant, Burn & Co, Ld	.. 12 , Mission Row ..	.. ditto
Chattarji, K D. ..	.. Assistant, Guest, Keen, Williams, Ld ..	.. 7, Council House Street ..	.. ditto
Chatarji, K D ..	.. Assistant, Lipton, Ld	.. 9, Weston Street ..	.. ditto

No.	Names.	Style or calling.	Residence or place of business.	Religion.
	Chatarji, Khagendranath	Assistant, Reserve Bank of India	8, Council House Street	Hindu
	Chatarji, Krishna Kumar	Head Clerk, Traffic Department, E B R	3, Kaylaghat Street	ditto
	Chatarji, Krishna Kumar	Assistant, Bird & Co	1-1, Clive Street	ditto
	Chatarji, Krishna Lal	Clerk, Lloyds Bank, Ld	101-1, Clive Street	ditto
	Chatarji, Kshetra Nath	Assistant, Bird & Co	1-1, Clive Street	ditto
	Chatarji, Kshitish Chandra	Sub-Head, Accounts Office, E B R	3, Kaylaghat Street	ditto
	Chatarji, Kumudbandhu	Assistant, Burmah Shell Co of India, Ld	Hongkong House	ditto
	Chatarji, Kunja Bihari	Head Clerk, Kalamazoo (Sales), Ld	2 & 3, Clive Row	ditto
	Chatarji, Kunja Lal	Clerk, Post Audit, Port Commissioners' Office	Strand Road	ditto
	Chatarji, Lal Bihari	Assistant, Macneill & Co	2, Fairlie Place	ditto
	Chatarji, Lalit Mohan	Assistant, Mackinnon, Mackenzie & Co	16, Strand Road	ditto
	Chatarji, Lalit Mohan	Assistant, Office of the I-G of Police	Writers' Buildings	ditto
	Chatarji, Makhanlal, BL	Assistant, Commercial Intelligence Department	1, Council House Street	ditto
	Chatarji, Makhanlal	Clerk, Calcutta Improvement Trust	5, Clive Street	ditto
	Chatarji, Manimohan	Accountant, Davenport & Co,	6, Church Lane	ditto

Chatarji, Manindra Kumar, MA	Assistant, Calcutta University	Senate House	ditto
Chatarji, Manindra Nath	Assistant, Price, Waterhouse, Peat & Co	B-4, Clive Buildings	ditto
Chatarji, Manmatha Nath	Assistant, Reserve Bank of India	8, Council House Street	ditto
Chatarji, Manmatha Nath	Assistant Store Keeper, Calcutta Improvement Trust	5, Clive Street	ditto
Chatarji, Manmatha Nath	Assistant, Office of the Geological Survey of India	27, Chowringhee	ditto
Chatarji, M C	Assistant, Remington Rand Inc	3. Council House Street	ditto
Chatarji, M K	Commercial Assistant, Reuters, Ld	7, Hare Street	ditto
Chatarji, M N, BA	Partner, Mookerjee Bros	126-B, Amherst Street	ditto
Chatarji, Mrityunjaya	Ledger-Keeper, Geo Henderson & Co, Ld	101-1, Clive Street	ditto
Chatarji, Mrityunjaya	Assistant, Commercial Union Assurance Co, Ld	32, Dalhousie Square	ditto
Chatarji, Nagendra N	Clerk, Burmah Shell Co of India, Ld	Hongkong House	ditto
Chatarji, Nagendra N	Clerk, Shaw, Wallace & Co	4, Bankshall Street	ditto
Chatarji, Nagendra N	Assistant, Grahams Trading Co (India), Ld	6, Lyons Range	ditto
Chatarji, Nagendra Nath	Clerk, C E S C, Ld	Victoria House	ditto
Chatarji, Nagendra Nath, BA	Assistant, Office of the I-G of Police	Writers' Buildings	ditto
Chatarji, Nalinaksha	Assistant, Begg, Dunlop & Co, Ld	2, Hare Street	ditto
Chatarji, Nalinaksha, BA	Supervisor, Telegraph Check Office	33, Dalhousie Square, South	ditto
Chatarji. Nalin Bihari	Clerk, W T Henley's Telegraph Works Co, Ld	Old Court House Corner	ditto
Chatarji, Nalin Krishna	Assistant, Mackinnon Mackenzie & Co	16, Strand Road	ditto
Chatarji, Nanda Gopal	Examiner of Stores, Indian Stores Department (Inspection)	6, Esplanade, East	ditto

No.	Names.	Style or calling.	Residence or place of business.	Religion.
	Chatarji, Nanda Lal	Clerk, Gillanders, Arbuthnot & Co	8, Clive Street	Hindu
	Chatarji, Nani Gopal	Assistant, Bird & Co	1-1, Clive Street	ditto
	Chatarji, Nani Gopal	Head Clerk, Mechl Department, E B R	3, Kaylaghat Street	ditto
	Chatarji, Narayan Ch	Steno-typist, C O P S Office, E I R	E I R House	ditto
	Chatarji, Narayan Ch	Clerk, Burmah Shell Co of India, Ld	Hongkong House	ditto
	Chatarji, Narayan Das	Assistant, Accountant-General's Office, Bengal	Treasury Buildings	ditto
	Chatarji, Narendra Krishna, BSC	Assistant Analyst, Bengal Public Health Laboratory	Chittaranjan Avenue	ditto
	Chatarji, Narendra Nath	Section Superintendent, Engineer's Office, E B R	3, Kaylaghat Street	ditto
	Chatarji, Narendra Nath	Assistant, Bengal Chemical and Pharmaceutical Works, Ld	31, Chittaranjan Avenue, South	ditto
	Chatarji, Narendra Nath	Head Clerk (Accident), Commercial Union Assurance Co, Ld	32, Dalhousie Square	ditto
	Chatarji, Naresh Chandra	Assistant, Legislative Department, Bengal	Council House	ditto
	Chatarji, N B	Assistant Bullion Keeper, Calcutta Mint	47, Strand Road	ditto
	Chatarji, N C	Cashier, Manufacturers' Life Insurance Co	27, Dalhousie Square	ditto
	Chatarji, Nirad Bihari	Clerk, C O S Office, E I R	E I R House	ditto
	Chatarji, Nirmal Chandra	Head Clerk, North British & Mercantile Insurance Co, Ld	101-1, Clive Street	ditto
	Chatarji, Nripendra Kumar	Sr Clerk, Office of the Controller of Purchase, Indian Stores Department.	6, Esplanade, East	ditto
	Chatarji, Nripendra Nath	Building Inspector, Calcutta Corporation	Municipal Office	ditto
	Chatarji, Nritya Gopal	Clerk, Turner, Morrison & Co, Ld	6, Lyons Range	ditto
	Chatarji, Panchanan	Sr Tester, C E S C, Ld	Victoria House	ditto
	Chatarji, Panchudhan MA	Assistant Superintendent, Reserve Bank of India	8, Council House Street	ditto

Chatarji, Pankoj Kumar B COM	Clerk, D A G P & T Office	7, Koilaghat Street	ditto
Chatarji, P C	Partner, Ganguli & Chatarjea	10-C, Government Place, East	ditto
Chatarji, Phani Bhusan	Estimator, Executive Engineer's Office, Damodar Division	Treasury Buildings	ditto
Chatarji, Phani Bhusan, BA	Assistant, Explosives Office	1, Council House Street	ditto
Chatarji, Phanindra Bhusan	Clerk, Engineering Department, Port Commissioners' Office	Strand Road	ditto
Chatarji, P K	Senior Assistant Estate Superintendent, Port Commissioners' Office.	Strand Road	ditto
Chatarji, Prabodh Chandra, BSC	Assistant, Board of Revenue, Bengal	Writers' Buildings	ditto
Chatarji, Prabodh Chandra	Assistant, Balmer Lawrie & Co, Ld	103, Clive Street	ditto
Chatarji, Prabodh Chandra	Assistant, James Finlay & Co, Ld	1, Clive Street	ditto
Chatarji, Prabodh Chandra	Chief Clerk, Bhattacharjee & Co	28, Pollock Street	ditto
Chatarji, Prabodh Chandra	Clerk, Chief Auditor's Office, E I Ry	E I R House	ditto
Chatarji, Prabodh Kumar, BSC, BL, GDA	Examiner of Accounts, Income-tax Office	6, Esplanade East	ditto
Chatarji, Prabodh Kumar	Assistant, Bengal Telephone Corporation, Ld	8, Hare Street	ditto
Chatarji, Prafulla Chandra	Stenographer, Agent's Office, E B R	3, Kaylaghat Street	ditto
Chatarji, Prakash Chandra, BA	Assistant, Bengali Translator's Office	Writers' Buildings	ditto
Chatarji, Pramatha Nath	Eng Supervisor, Calcutta Corporation, District No I	79, Cornwallis Street	ditto
Chatarji, P N	Cashier, The Dunlop Rubber Co (India), Ld	42, Free School Street	ditto
Chatarji, Pramatha Nath	Assistant, Accountant-General's Office, Bengal	Treasury Buildings	ditto
Chatarji, Pramatha Nath	Head Clerk, Royal Insurance Co, Ld	26 & 27, Dalhousie Square	ditto

No.	Names.	Style or calling.	Residence or place of business.	Religion.
	Chatarji, Prandhan ..	Clerk, Traffic Department, E B R	3, Koilaghat Street	Hindu
	Chatarji, Pran Krishna	Sub-Head, Accounts Dept, E B R	3, Koilaghat Street	ditto
	Chatarji, Prasad Chandra	Clerk, Kilburn & Co	4, Fairlie Place	ditto
	Chatarji, Pratul Bihari ..	Assistant, Board of Revenue, Bengal	Writers' Buildings	ditto
	Chatarji, Pravas Chandra	Assistant, Office of the Private Secretary to H E the Governor of Bengal.	Government House	ditto
	Chatarji, Pulin Bihari ..	Assistant, Accountant-General's Office, Bengal	Treasury Buildings	ditto
	Chatarji, Pulin Krishna ..	Assistant, Accountant-General's Office, Bengal	Treasury Buildings	ditto
	Chatarji, Rajani Kanta ..	Clerk, Engineering Department, Port Commissioners' Office ..	Strand Road	ditto
	Chatarji, Rajani Kanta ..	Office Supdt, Personnel Branch, Agency Dept, E B R ..	3, Kaylaghat Street	ditto
	Chatarji, Raj Kumar ..	Demonstrator, Vidyasagar College	39, Shankar Ghose Lane	ditto
	Chatarji, Rakhal Chandra	Assistant, Office of the Inspector-General of Police	Writers' Buildings	ditto
	Chatarji, Ram Chandra ..	Clerk, Engineer's Office, E B R	3, Kaylaghat Street	ditto
	Chatarji, Rasamaya, MA	Professor, Ripon College	24, Harrison Road	ditto
	Chatarji, Renupada, BA, BL	Assistant, Bengal Secretariat, P W D	Writers' Buildings	ditto
	Chatarji, R B ..	Clerk, C E S C, Ld	Victoria House	ditto
	Chatarji, Sabitri Prasanna, BA	Publicity Officer, Hindusthan Co-operative Insurance Society, Ld	Hindusthan Buildings	ditto
	Chatarji, Sailesh Chandra, BA	Assistant, Bengal Secretariat, Finance Department ..	Writers' Buildings	ditto
	Chatarji, Sanat Kumar, BA	Assistant, Central Stationery Office	3, Church Lane	ditto
	Chatarji, Santa Kumar ..	Assistant, Superintendent, E B Ry	3, Koilaghat Street	ditto
	Chatarji, Santosh Kumar	Assistant, Accounts Department, Calcutta Corporation ..	Municipal Office	ditto
	Chatarji, Sarada Prasad ..	Clerk, C E's Office, E I R	E I R House	ditto

Chatarji, Sarathi Krishna	Clerk, D A G P & T Office	7, Koilaghat Street	ditto
Chatarji, Saroj Kumar	Assistant, Martin & Co	12, Mission Row	ditto
Chatarji, Saroj Kumar	Building Inspector, Calcutta Corporation	Municipal Office	ditto
Chatarji, Satish Ch	Clerk, C A O's Office, E I R	E I R House	ditto
Chatarji, Satish Chandra	Head Estimator, Office of the Superintending Engineer, Presidency Circle, P W D.	Writers' Buildings	ditto
Chatarji, Satish Chandra	Assistant, Land Revenue Department, Calcutta Collectorate	3, Charnock Place	ditto
Chatarji, Satish Chandra	Assistant, Accountant-General's Office, Bengal	Treasury Buildings	ditto
Chatarji, Satkari	Assistant, McLeod & Co	28, Dalhousie Square	ditto
Chatarji, Satyacharan	Auditor, George Read & Co	Avenue House, Chowringhee Square	ditto
Chatarji, Satya Ranjan	Stenographer, Begg Dunlop & Co, Ld	2, Hare Street	ditto
Chatarji, Satyendra Nath	Clerk, Telegraph Check Office	33, Dalhousie Square, South	ditto
Chatarji, Shachindra Nath	Clerk, D A G P & T Office	7, Koilaghat Street	ditto
Chatarji, Shachindra Nath	Assistant, A-G's Office, Bengal	Treasury Buildings	ditto
Chatarji, Shachindra Nath	Assistant, Commercial Union Assurance Co, Ld	32, Dalhousie Square	ditto
Chatarji, Shachibrata	Assistant, A-G's Office, Bengal	Treasury Buildings	ditto
Chatarji, Shailendra Krishna	Broker, Anderson, Wright & Co	22, Strand Road	ditto
Chatarji, Shailendra Nath	Clerk, Royal Insurance Co, Ld	26 & 27, Dalhousie Square	ditto
Chatarji, Shambhu Dass	Assistant, Commercial Intelligence Department	1, Council House Street	ditto
Chatarji, Shambhu Nath, BSc	Clerk, D A G P & T Office	7, Koilaghat Street	ditto
Chatarji, Shambhu Nath, BA	Assistant, Bengal Secretariat, Political (Jails) Department	Writers' Buildings	ditto
Chatarji, Shambhu Nath	Hd Clerk, Geo Miller & Co, Ld	7, Hastings Street	ditto
Chatarji, Sham Lal	Assistant, A-G's Office, Bengal	Treasury Buildings	ditto

No.	Names.	Style or calling.	Residence or place of business.	Religion.
	Chatarji, Shanti Nath	Cashier, North British & Mercantile Insurance Co, Ld	101-1, Clive Street	Hindu
	Chatarji, Sharat Chandra	Assistant, A-G's Office, Bengal	Treasury Buildings	ditto
	Chatarji, Sharat Chandra	Assistant, Mackinnon, Mackenzie & Co	16, Strand Road	ditto
	Chatarji, Shashadhar	Accountant, Hijli Division, P W D, Bengal	Writers' Buildings	ditto
	Chatarji, Shashadhar	Assistant, Mackinnon, Mackenzie & Co	16, Strand Road	ditto
	Chatarji, Shib Chandra	Assistant, Mackinnon, Mackenzie & Co	16, Strand Road	ditto
	Chatarji Shib Charan	Clerk, Engineer's Office, E B R	3, Kaylaghat Street	ditto
	Chatarji, Shib Nath	Treasurer, Calcutta Tramways Co, Ld	7, Church Lane.	ditto
	Chatarji, Shrish Chandra	Assistant, Office of the Director of Industries, Bengal	40-1A, Free School Street	ditto
	Chatarji, Shyama Ch	Clerk, Sun Life of Canada	12, Dalhousie Square, East	ditto
	Chatarji, Shyamapada, BA	Head Clerk, Health Department, Calcutta Corporation	Municipal Office	ditto
	Chatarji, Siva Prosad	Clerk, Burmah Shell Co of India, Ld	Hongkong House	ditto
	Chatarji, Subodh Chandra	Assistant, Board of Revenue, Bengal	Writers' Buildings	ditto
	Chatarji, Subodh Chandra, BA	Assistant, Accountant-General's Office, Bengal	Treasury Buildings	ditto
	Chatarji, Subodh Narayan	Stenographer, Agent's Office, E B R	3, Kaylaghat Street	ditto
	Chatarji, Sudhan C	Accountant, Humayan Properties, Ld	1, Humayan Place	ditto
	Chatarji, Sudhangsumay	License Inspector, Calcutta Corporation	Municipal Office	ditto
	Chatarji, Sudhangsu Sekhar	Assistant, A-G's Office, Bengal	Treasury Buildings	ditto
	Chatarji, Sudhir Chandra	Assistant, Bird & Co	1-1, Clive Street	ditto
	Chatarji, Sukumar	Foreman, Testing Department, C E S C, Ld	Victoria House	ditto
	Chatarji, Sukumar	Clerk, C A O's Office, E I R	E I R House	ditto

Chatarji, Sukumar	Head Clerk, Marine Department, New Zealand Insurance Co, Ld	26, Dalhousie Square	ditto
Chatarji, Suniti Nath	Assistant, Patent Office	1, Council House Street	ditto
Chatarji, Surath Chandra	Assistant, Ford, Rhodes, Thornton & Co	Tower House, Chowringhee Square	ditto
Chatarji, Surendra N	Clerk, C A O's Office, E I R	E I R House	ditto
Chatarji, Surendra Nath	Assistant, A-G's Office, Bengal	Treasury Buildings	ditto
Chatarji, Surendra Nath	Clerk, Gillanders, Arbuthnot & Co	8, Clive Street	ditto
Chatarji, Surendra Nath	Assistant, Photo-Litho Branch, Surveyor-General's Office	14, Wood Street	ditto
Chatarji, Surendra Nath	Accountant, National Council, Y M C A	5, Russell Street	ditto
Chatarji, Surendra Nath	Clerk, Shaw, Wallace & Co	4, Bankshall Street	ditto
Chatarji, Suresh Chandra, BSC	S A Superintendent (Drawing), Survey of India	13, Wood Street	ditto
Chatarji, Suresh Chandra	Clerk, E B R	3, Koilaghat Street	ditto
Chatarji, Tarak Chandra	Assistant, Commercial Intelligence Department	1, Council House Street	ditto
Chatarji, Taraknath	Assistant, Ford, Rhodes, Thornton & Co	Tower House, Chowringhee Square	ditto
Chatarji, Taraprasad, MA	Assistant, Commercial Intelligence Department, India	1, Council House Street	ditto
Chatarji, Tulsi Charan	Assistant, Mackinnon, Mackenzie & Co	16, Strand Road	ditto
Chatarji, Tulsidas	Clerk, National City Bank of New York	4, Clive Street	ditto
Chatarji, Upendra Nath	Chief Clerk, General Accident, Fire & Life Assurance Corporation, Ld.	7, Hare Street	ditto
Chatarji, Upendra Nath	Assistant, Accountant-General's Office, Bengal	Treasury Buildings	ditto
Chatarji, Upendra Nath	Stenographer to the Physical Director, Bengal	Writers' Buildings	ditto
Chatarji, Upendra Nath	Clerk, Gillanders, Arbuthnot & Co	8, Clive Street	ditto
Chatarji, Upendra Nath	Clerk, Mechl Department, E B R	3, Kaylaghat Street	ditto
Chatarji, Upendra Nath	Assistant, James Finlay & Co, Ld	1, Clive Street	ditto

No.	Names.	Style or calling.	Residence or place of business.	Religion.
	Chaudhuri, Abdul Aziz, BA	Assessing Inspector, Calcutta Corporation	Municipal Office	Mahomedan
	Chaudhuri, Altaf Ahmed	Accountant, Eastern Federal Union Insurance Co, Ld	9, Clive Street	ditto
	Chaudhuri, Amulya Mohan	Assistant, Surgeon-General's Office, Bengal	Writers' Buildings	Hindu
	Chaudhuri, Anukul Chandra	Ledger Keeper, Geo Henderson & Co	101-1, Clive Street	ditto
	Chaudhuri, Ashutos	Building Inspector, Calcutta Corporation	Municipal Office	ditto
	Chaudhuri, Aswini Kumar	Building Inspector, Calcutta Corporation	Municipal Office	ditto
	Chaudhuri, Azfat Raza, BA	Con Overseer, Calcutta Corporation, District III	Hogg Street	Mahomedan
	Chaudhuri, B	Assistant, Jessop & Co, Ld	93, Clive Street	Hindu
	Chaudhuri, Bagla Charan, BA	Clerk, D A G P & T Office	7, Koilaghat Street	ditto
	Chaudhuri, Bejoy Chandra	Assistant, Accounts Department, Calcutta Corporation	Municipal Office	ditto
	Chaudhuri, Bhupendra Nath	Assistant, Legislative Department, Bengal	Council House	ditto
	Chaudhuri, Bijali Bhusan	Typist, Reserve Bank of India	8, Council House Street	ditto
	Chaudhuri, Gopal Chandra	Passed Accounts Clerk, Western (Electrical) Division, P W D	Writers' Buildings	ditto
	Chaudhuri, Harendra Lal, MA	Head Clerk, Sanskrit College	College Square	ditto
	Chaudhuri, Haripada	Sub-Head, C A O's Office, E I R	E I R House	ditto
	Chaudhuri, Indubhusan	Clerk, Ralli Brothers, Ld	16, Hare Street	ditto
	Chaudhuri, Jamini Bhusan	Assistant, Reserve Bank of India	8, Council House Street	ditto
	Chaudhuri, Jatindra Nath	Head Computor, C E's Office, E I R	E I R House	ditto
	Chaudhuri, Jatindra Nath	Assistant, Bengal Secretariat, P W D	Writers' Buildings	ditto

Chaudhuri, Jayantipada ..	Assistant, Controller's Office, Calcutta University	Senate House	ditto
Chaudhuri, Jiban Krishna	Assistant, Patent Office	1, Council House Street	ditto
Chaudhuri,, Kalidas, MA	Teacher, Bangabasi College School	19, Scott Lane	ditto
Chaudhuri, Kanai Nath, MA	Offg Accountant, Accountant-General's Office, Bengal	Treasury Buildings	ditto
Chaudhuri, Keshab Lal	Assistant, Calcutta Improvement Trust	5, Clive Street	ditto
Chaudhuri, Kumud Bandhu	Head Clerk, Mechl Department, E B R	3, Kaylaghat Street	ditto
Chaudhuri, M, BA	Clerk, Calcutta Mint	47, Strand Road	ditto
Chaudhuri, Mahendra Nath	Head Supervisor, Mathematical Instrument Office	15, Wood Street	ditto
Chaudhuri, Mahomed Ali, BL	Sub-Inspector, License Department, Calcutta Corporation	Municipal Office	Mahomedan
Chaudhuri, Manindra Nath	Clerk, Central Stationery Store	3, Church Lane	Hindu
Chaudhuri, Murari Mohan, MA, BL	Assistant, D J Keymer & Co, Ld	4, Lyons Range	ditto
Chaudhuri, N K	Divisional Accountant, A-G's Office, Bengal	Treasury Buildings	ditto
Chaudhuri, Nanda Lal	Assistant, Macneill & Co	2, Fairlie Place	ditto
Chaudhuri, Nani Madhav, MA	Assistant, Bengali Translator's Office	Writers' Buildings	ditto
Chaudhuri, Phani Bhusan	Stenographer & Junior Council Reporter	Writers' Buildings	ditto

No.	Names.	Style or calling.	Residence or place of business.	Religion.
	Chaudhuri, Phani Lal	Building Inspector, Calcutta Corporation	Municipal Office	Hindu
	Chaudhuri, Pramatha Nath	Clerk, Royal Exchange Assurance	1 & 2, Old Court House Corner	ditto
	Chaudhuri, Ram Govind, MA	Clerk, D A G P & T Office	7, Koilaghat Street	ditto
	Chaudhuri, Santosh Kumar	Building Inspector, Calcutta Corporation	Municipal Office	ditto
	Chaudhuri, Sarbaribhusan	Stenographer, Office of the Controller of Currency	Treasury Buildings	ditto
	Chaudhuri, Saroj Kumar	Assistant, Bengal Secretariat, Appointment Department	Writers' Buildings	ditto
	Chaudhuri, Satish Chandra	Clerk, Calcutta Improvement Trust	5, Clive Street	ditto
	Chaudhuri, Satish Chandra	Assistant, Accounts Department, Calcutta Corporation	Municipal Office	ditto
	Chaudhuri, Sharat Chandra	Clerk, Burmah Shell Co of India, Ld	Hongkong House	ditto
	Chaudhuri, Sudhir Chandra	Assistant, Office of the Inspector-General of Prisons, Bengal	Writers' Buildings	ditto
	Chaudhuri, Sukumar	Assistant Supdt, Office of the Director of Industries, Bengal	40-1A, Free School Street	ditto
	Chaudhuri, Surendra Nath	Clerk, C E's Office, E I R	E I R House	ditto
	Chaudhuri, Surendra Nath	Engineering Overseer, Calcutta Corporation, District I	79, Cornwallis Street	ditto
	Chaudhuri, T C N	Clerk, Post-Audit, Port Commissioners' Office	Strand Road	ditto
	Coar, Mohimaranjan	Head Clerk, Stores Dept, E B R	3, Koilaghat Street	ditto

Dalui, Bijaya Krishna, BA	Clerk, D A G P & T Office	7, Koilaghat Street	ditto
Das, Adhar Chandra	Assistant, Emigration Office	8, Dalhousie Square, East	ditto
Das, Akshaya Kumar	Ledger-keeper, Geo Henderson & Co, Ld	101-1, Clive Street	ditto
Das, Amrita Lal	Special Inspector, Traffic Department, E B R	3, Koilaghat Street	ditto
Das, Amrita Lal	Assistant, Office of the Director of Public Health, Bengal	Writers' Buildings	ditto
Das, Anil Krishna	Assistant, Accountant-General's Office, Bengal	Treasury Buildings	ditto
Das, Annada Prasad	Stenographer, Mather & Platt, Ld	7, Hare Street	ditto
Das, Aprakash Chandra	Clerk, D A G P & T Office	7, Koilaghat Street	ditto
Das, Arabinda Chandra	Clerk, Ralli Brothers, Ld	16, Hare Street	ditto
Das, Ashru Mukul	Clerk, Martin & Co	12, Mission Row	ditto
Das, Ashutos	Assistant, Mackinnon, Mackenzie & Co	16, Strand Road	ditto
Das, Ashutos	Clerk, Lloyds Bank, Ld	101-1, Clive Street	ditto
Das, Ashwini Kumar	Surveyor, Calcutta Improvement Trust	5, Clive Street	ditto
Das, Balai Chandra	Assistant, Commercial Union Assurance Co, Ld	32, Dalhousie Square	ditto

No.	Names	Style or calling.	Residence or place of business.	Religion.
	Das, Ban Bihari	Clerk, C A O's Office, E I R	E I R House	Hindu
	Das, Basanta, B Sc	Partner, Dass & Co	20, Strand Road	ditto
	Das, Bholanath	Assistant, Central Forms Store	166, Dharamtala Street	ditto
	Das, Bhupendra Nath, MA	Clerk, Dy Accountant-General, Posts & Telegraphs Office	7, Koilaghat Street	ditto
	Das, Bhupendra Nath	Clerk, Imperial Bank of India	3, Strand Road	ditto
	Das, Bibhuti Bhusan	Clerk, Chartered Bank of India, Australia & China	1-1, Clive Street	ditto
	Das, Bijaya Krishna	Clerk, Bengal Smoke Nuisances Commission	3, Charnock Place	ditto
	Das, Bijaya Krishna	Clerk, Gillanders, Arbuthnot & Co	8, Clive Street	ditto
	Das. Birendra Lal	Assistant, J & R Hutchison, Ld	29, Waterloo Street	ditto
	Das, B P	Dy Accountant, Associated British Machine Tool Makers, Ld	6, Old Post Office Street	ditto
	Das, Brajalal	Clerk, Agent's Office, E I R	E I R House	ditto
	Das, Dayal Kumar	Clerk, Royal Asiatic Society of Bengal	1, Park Street	Christian
	Das, Debendra Nath, BA	Clerk, D A G P & T Office	7, Koilaghat Street	Hindu
	Das, Dinabandhu, BSc	Lecturer, Calcutta Technical School	110, Surendra Nath Banerjee Road	ditto
	Das, D N	Levelling Surveyor, Calcutta Corporation	Municipal Office	ditto
	Das. Dulal Ch	Superintendent, E B R, Engineering Deptt	3, Koilaghat Street	ditto

Das, Gagan Chandra	Cashier, Sun Life of Canada	12, Dalhousie Square, East	ditto
Das, Gaurishankar	Assistant, Accountant-General Office, Bengal	Treasury Buildings	ditto
Das, Girija Bhusan	Clerk, Ralli Brothers, Ld	16, Hare Street	ditto
Das, G L	Assistant, Mackinnon, Mackenzie & Co	8, Strand Road	ditto
Das, Haridas	Head Assistant and Accountant, Victoria Memorial Trust Office	Victoria Memorial Hall	ditto
Das, Haripada	Clerk, Ralli Brothers, Ld	16, Hare Street	ditto
Das, Haripada	Proof Examiner, Photo-Litho Office, Survey of India	14, Wood Street	ditto
Das, Hemanta Kumar, BSC	Clerk, D A G P & T Office	7, Koilaghat Street	ditto
Das, Hem Chandra	Assistant, Accountant-General's Office, Bengal	Treasury Buildings	ditto
Das, Himangshu Sekhar, BE	Assistant Engineer, J C Banerjee, Ld	20, Strand Road	ditto
Das, Hiralal	Clerk, Gillanders, Arbuthnot & Co	8, Clive Street	ditto
Das, Jagat Bandhu, MA	Clerk, D A G P & T Office	7, Koilaghat Street	ditto
Das, Jatindra Mohan	Clerk, D A G P & T Office	7, Koilaghat Street	ditto
Das, Jatindra Nath, BA	Assistant, Accountant-General's Office, Bengal	Treasury Buildings	ditto
Das, Jitendra Mohan	Assistant Lighting Superintendent, Calcutta Corporation	Municipal Office	ditto
Das, Jitendra Nath	Assistant, Engineer, Bengal Telephone Corporation, Ld	10, Circus Avenue, Park Circus	ditto

No.	Names.	Style or calling.	Residence or place of business.	Religion.
	Das, Jogendra Nath	Clerk, Ralli Brothers, Ld	16, Hare Street	Hindu
	Das, Joseph Jnanendra Mohan	Assistant, Office of the Inspector-General of Prisons, Bengal	Writers' Buildings	Christian
	Das, Jugal Kishore	Clerk, Turner, Morrison & Co, Ld	6, Lyons Range	Hindu
	Das, Jyotish Chandra	Stenographer, Talbot & Co	Tower House	ditto
	Das, Jyotish Chandra	Clerk, Post-Audit, Port Commissioners' Office	Strand Road	ditto
	Das, K	Assistant Printer, *Statesman*, Ld	Statesman House	ditto
	Das, Kalachand	Assistant, Accountant-General's Office, Bengal	Treasury Buildings	ditto
	Das, Kali Mohan	Levelling Surveyor, Special Officer's Department, Calcutta Corporation.	Municipal Office	ditto
	Das, Kalipada, BA	Assistant, Calcutta University	Senate House	ditto
	Das, Kanai Lal	Head Clerk, Shaw, Wallace & Co	4, Bankshall Street	ditto
	Das, Khagendra Nath	Clerk, Burmah Shell Co of India, Ld	Hongkong House	ditto
	Das, Khagendra Nath, MSC	Assistant, Zoological Survey of India	Indian Museum	ditto
	Das, Kishori Lal	Partner, Dass & Co	20, Strand Road	ditto
	Das, Kishori Mohan	Assistant, F W Heilgers & Co	1-1, Clive Street	ditto
	Das, Krishna Kishore, BA	Assistant, Board of Revenue, Bengal	Writers' Buildings	ditto
	Das, Kshetra Mohan	Clerk, D A G P & T Office	7, Koilaghat Street	ditto
	Das, Kshitish Chandra	Clerk, Telegraph Check Office	33, Dalhousie Square, South	ditto

Das, Lal Bihari	Clerk, Shaw, Wallace & Co	4, Bankshall Street	ditto
Das, Lal Mohan, BA	Assistant, Accountant-General's Office, Bengal	Treasury Buildings	ditto
Das, Lalit Mohan	Clerk, Telegraph Check Office	33, Dalhousie Square, South	ditto
Das, L M	Assistant, Mackinnon, Mackenzie & Co	8, Strand Road	ditto
Das, Mahananda Lal	Clerk, Engineer's Office, E B R	3, Koilaghat Street	ditto
Das, Mahendra Nath	Clerk, Telegraph Check Office	33, Dalhousie Square, South	ditto
Das, Maheshwar	Clerk, Imperial Bank of India	3, Strand Road	ditto
Das, Manmatha	Assistant, Accountant-General's Office, Bengal	Treasury Buildings	ditto
Das, Manick Lal, BA	Partner, Dass & Co	20, Strand Road	ditto
Das, Manindra Mohan	Assistant, Indian Stores Department (Inspection)	6, Esplanade, East	ditto
Das, Manotosh	Assistant, F W Heilgers & Co	1-1, Clive Street	ditto
Das, Nagendra Chandra, MA, BT	Assistant Master, Sanskrit Collegiate School	College Square	ditto
Das, Nagendra Kumar	2nd Clerk, Archaeological Survey, Eastern Circle	Indian Museum	ditto
Das, Nagendra Nath	Assistant, James Finlay & Co, Ld	1, Clive Street	ditto
Das, Nagendra Nath	Supervisor, Mathematical Instrument Office	15, Wood Street	ditto
Das, Nakul Chandra	Audit Inspector, Port Commissioners' Office	Strand Road	ditto
Das, Nalini Bhusan	Assistant, Bengal Secretariat, Poli (Special) Department	Writers' Buildings	ditto

No.	Names.	Style or calling.	Residence or place of business.	Religion.
	Das, Nani Gopal	Clerk, C A O's Office, E I R	E I R House	Hindu
	Das, Narendra Nath BSC, BE	Manager, Hindusthan Engineering & Construction Co	10, Hastings Street	ditto
	Das, Narendra Nath	Clerk, Ralli Brothers, Ld	16, Hare Street	ditto
	Das, Narendra Nath	Assistant, P & O Banking Corporation, Ld	1, Fairlie Place	ditto
	Das, Nihar Ranjan, MA	Inspector, License Department, Calcutta Corporation	Municipal Office	ditto
	Das, Nilmani	Clerk, Controller of Stores Office, E I R	E I R House	ditto
	Das, Nirmal Chandra, MSC	Clerk, Statistical Office, E I R	E I R House	ditto
	Das, Nripendra Nath	Clerk, Royal Insurance Co, Ld	26 & 27, Dalhousie Square	ditto
	Das, Nritya Lal	Assistant, Balmer, Lawrie & Co, Ld	103, Clive Street	ditto
	Das, Panchanon	Assistant, Price Waterhouse, Peat & Co	B-4, Clive Buildings	ditto
	Das, Panchu Gopal	Accountant, Houghton Butcher (Eastern), Ld	10, Hungerford Street	ditto
	Das, Panchu Gopal	Assistant, Bengal Secretariat, Finance Department	Writers' Buildings	ditto
	Das, Panchu Gopal	Assistant, Bengal Secretariat, Political Department	Writers' Buildings	ditto
	Das, Parmeshwari	Clerk, C A O's Office, E I R	E I R House	ditto
	Das, P B	Assistant, Mackinnon, Mackenzie & Co	8 Strand Road	ditto
	Das, Phakir Chandra, I	Clerk, D A G P & T Office	7, Koilaghat Street	ditto
	Das, Phakir Chandra, II	Clerk, D A G P & T Office	7, Koilaghat Street	ditto

Das, Phanindra Krishna, BSC	Assistant Analyst, Bengal Public Health Laboratory	Chittaranjan Avenue	ditto
Das, Phanindra Nath	Assistant, Accountant-General's Office, Bengal	Treasury Buildings	ditto
Das, P M	Clerk, Heatley & Gresham, Ld	6, Waterloo Street	ditto
Das, Prabodh Ch	Clerk, Telegraph Check Office	33, Dalhousie Square, South	ditto
Das, Prabodh Kumar	Clerk, D A G P & T Office	7, Koilaghat Street	ditto
Das, Prakash Chandra	Assistant, Brooke Bond (India), Ld	2, Metcalfe Street	ditto
Das, Pramatha Nath	Assistant, Martin & Co	12, Mission Row	ditto
Das, Pramode Kumar	Head Assistant, Income-tax Office	6, Esplanade, East	ditto
Das, Pulin Krishna	Assistant, Geological Survey of India	27, Chowringhee	ditto
Das, Rabindra Nath	Clerk, C O P S's Office, E I R	E I R House	ditto
Das, Radha Shyam	Ledger-keeper, Geo Henderson & Co, Ld	101-1, Clive Street	ditto
Das, Rai Charan, BA	Assistant, Calcutta University	Senate House	ditto
Das, Rakhal Chandra	Assistant, Bird & Co	1-1, Clive Street	ditto
Das, Ramakanta	Ledger-keeper, Geo Henderson & Co, Ld	101-1, Clive Street	ditto
Das, Ramani Mohan	Clerk, Ralli Brothers, Ld	16, Hare Street	ditto
Das, Ramesh Chandra	Clerk, D A G P & T Office	7, Koilaghat Street	ditto
Das, Ramesh Chandra	Clerk, Shaw, Wallace & Co	4, Bankshall Street	ditto
Das, Ramesh Chandra, MA	Assistant, Calcutta University	Senate House	ditto

No.	Names.	Style or calling.	Residence or place of business.	Religion.
	..s, Ram Sashi	Clerk, D A G P & T Office	7, Koilaghat Street	Hindu
	Das, Rash Bihari, BCom	Clerk, D A G P & T Office	7, Koilaghat Street	ditto
	Das, Rasik Chandra	Reviser, Government of India Press	8, Hastings Street	ditto
	Das, R N, BA	Manager, Sen & Pandit	Mercantile Buildings	ditto
	Das, Rohini Kanta, BSc	Examiner of Accounts, Income-tax Office	3, Government Place, West	ditto
	Das, Santos Kumar	Engraver, Drawing Branch, Surveyor-General's Office	13, Wood Street	ditto
	Das, Sarada Kanta	Stenographer, The Eastern Bank, Ld	9, Clive Street	ditto
	Das, Sarat Chandra	Clerk, C A O's Office, E I R	E I R House	ditto
	Das, Sasanka Shekhar, BA	Clerk, D A G P & T Office	7, Koilaghat Street	ditto
	Das, Satish Chandra	Assistant, Balmer, Lawrie & Co, Ld	103, Clive Street	ditto
	Das, Satish Chandra	Assistant, Royal Insurance Co, Ld	26 & 27, Dalhousie Square	ditto
	Das, Satish Chandra	Clerk, D A G P & T Office	7, Koilaghat Street	ditto
	Das, Satish Chandra	Assistant, Accountant-General's Office, Bengal	Treasury Buildings	ditto
	Das, Satkari, BSc	Sub-Head, C A O's Office, E I R	E I R House	ditto
	Das, Satya Charan	Clerk, Harrisons & Crosfield, Ld	6, Church Lane	ditto
	Das, Satyacharan	Typist, Anderson, Wright & Co	22, Strand Road	ditto
	Das, Satya Kinkar	Clerk, C A O's Office, E I R	E I R House	ditto

Das, Shachindra Kumar ..	Inspector for Electric Installation, Calcutta Corporation ..	Municipal Building ..	ditto
Das, Shailendra Nath ..	Assistant Accountant, Bengal Provincial Co-operative Bank, Ld	Writers' Buildings ..	ditto
Das, Shib Chandra, LMS ..	Food Inspector, Calcutta Corporation ..	79, Cornwallis Street ..	ditto
Das, Shrish Chandra ..	Clerk, Gillanders, Arbuthnot & Co ..	8, Clive Street ..	ditto
Das, Shrish Chandra ..	Clerk, Central Stationery Store ..	3, Church Lane ..	ditto
Das, Shrish Chandra, MA ..	Assistant, Accountant-General's Office, Bengal ..	Treasury Buildings ..	ditto
Das, Siddheswar ..	Clerk, Telegraph Check Office ..	33, Dalhousie Square, South ..	ditto
Das, Sisir Kumar, B E ..	Overseer, C E's Office, Calcutta Corporation ..	Municipal Office ..	ditto
Das, S K ..	Assistant, Imperial Chemical Industries (India), Ld ..	18, Strand Road ..	ditto
Das, Srinivas ..	Assistant, Surgeon-General's Office, Bengal ..	Writers' Buildings ..	ditto
Das, Sudhangsu Shekhar, B Sc (Cal), B Eng. (Sheffield)	Overseer, C E's Office, Calcutta Corporation ..	Municipal Office ..	ditto
Das, Sudhir Kumar ..	Assistant, Martin & Co ..	12, Mission Row ..	ditto
Das, Sudhir Kumar, BSc ..	Assistant Analyst, Bengal Public Health Laboratory ..	Chittaranjan Avenue ..	ditto
Das, Surendra Nath ..	Head Clerk, La Martinière ..	11, Loudon Street ..	ditto
Das, Surendra Nath ..	Section Holder, Government of India Press ..	8, Hastings Street ..	ditto
Das, Surendra Nath ..	Assistant, Presidency College ..	86-1, College Street ..	ditto
Das, Suresh Chandra ..	Clerk, Thos Cook & Son, Ld ..	4, Dalhousie Square ..	ditto
Das, Suresh Chandra, BA ..	Clerk, D A G P & T Office ..	7, Koilaghat Street ..	ditto
Das, Sushil Kumar ..	Assistant, Martin & Co ..	12, Mission Row ..	ditto
Das, S P, B Sc (Eng, Glasgow) ..	Assistant, Holmes, Wilson, & Co, Ld ..	Norton Buildings ..	ditto

No.	Names.	Style or calling.	Residence or place of business.	Religion.
	Das, Tarani Charan, BSc	Clerk, D A G P & T Office	7, Koilaghat Street	Hindu
	Das, T M	Engineer, Talbot & Co	Tower House, Chowringhee Square	ditto
	Das, Upendra Nath	Clerk, Ralli Brothers, Ld	16, Hare Street	ditto
	Das, Upendra Nath	Assistant, Macneill & Co	2, Fairlie Place	ditto
	Das De, M R	Assistant, Holmes, Wilson & Co, Ld	Norton Buildings	ditto
	Das Guha, Sasthi Charan	Clerk, Harrisons & Crosfield, Ld	6, Church Lane	ditto
	Das Gupta, Abinash Chandra, BSc	Assistant Analyst, Public Health Laboratory, Bengal	Chittaranjan Avenue	ditto
	Das Gupta, A K	Assistant, Steuart & Co, Ld	57, Park Street	ditto
	Das Gupta, Amalendu	Journalist, *Statesman*, Ld	Statesman House	ditto
	Das Gupta, B C	Assistant Engineer, G E C (India), Ld	Magnet House, Chittaranjan Avenue South	ditto
	Das Gupta, Binaya Bhusan, BA	Assistant, Accountant-General's Office, Bengal	Treasury Buildings	ditto
	Das Gupta, Binaya Bhusan	Assistant, Commercial Intelligence Deptt India	1, Council House Street	ditto
	Das Gupta, Binode Lal, BCom	Lighting Inspector, Calcutta Corporation	Municipal Office	ditto
	Das Gupta, Binode Lal	Clerk, D A G P & T Office	7, Koilaghat Street	ditto
	Das Gupta, Bipin Bihari	Assistant, Controller's Office, Calcutta University	Senate House	ditto
	Das Gupta, Brajendra Bhusan, B.A.	Assistant, Accountant-General's Office, Bengal	Treasury Buildings	ditto
	Das Gupta, Debendra Nath	Assistant, Calcutta University	Senate House	ditto
	Das Gupta, Dinesh Chandra	Assistant, Bengal Secretariat, P W D	Writers' Buildings	ditto
	Das Gupta, Harendra Nath	Assistant, Bengal Secretariat, L S-G Department	Writers' Buildings	ditto
	Das Gupta, Hemendra Kumar	Assistant, Martin & Co	12, Mission Row	ditto

Das Gupta, Jitendra Mohan	Food Inspector, Calcutta Corporation	79, Cornwallis Street	ditto
Das Gupta, Jnanendra Kumar	Head Draftsman, Superintending Engineer's Office, Southern Circle, Public Works Department.	3, Government Place, West	ditto
Das Gupta, K K	Inspector of Factories, Bengal	40-1A, Free School Street	ditto
Das Gupta, Kartik Chandra, BA	Superintendent, Registrar's Office, Calcutta University	Senate House	ditto
Das Gupta, Krishna Kanta	Clerk, Calcutta Improvement Trust	5, Clive Street	ditto
Das Gupta, Kshitish Chandra	Assistant Estate Superintendent, Port Commissioners' Office	Strand Road	ditto
Das Gupta, Manaranjan, MA	Lecturer, City College	102-1, Amherst Street	ditto
Das Gupta, Manaranjan	Building Inspector, Calcutta Corporation	Municipal Office	ditto
Das Gupta, Manindra	Artist, *Statesman*, Ld	Statesman House	ditto
Das Gupta, Manmohan, BL	Head Assistant, Income-tax Office	Imperial Secretariat Buildings	ditto
Das Gupta, Mati Lal	Head Assistant, Land Revenue Department, Calcutta Collectorate.	3, Charnock Place	ditto
Das Gupta, N C, BSc (Eng)	Engineer, Indo-Swiss Trading Co, Ld	2, Church Lane	ditto
Das Gupta, Nani Gopal, B Sc	Assessor, Income-tax Office	3, Government Place, West	ditto
Das Gupta, Nirmal Chandra	Clerk, Engineering Department, Port Commissioners' Office	Strand Road	ditto
Das Gupta, P B, BA	Sub-Head, C A O's Office, E I R	E I R House	ditto
Das Gupta, Prabodh Nath, BA, GDA	Examiner of Accounts, Income-tax Office	3, Government Place, West	ditto
Das Gupta, Prafulla Chandra	Engrg Overseer, Calcutta Corporation	79, Cornwallis Street	ditto
Das Gupta, Pramode Kumar, BA	Clerk, Assessor's Department, Calcutta Corporation	Municipal Office	ditto
Das Gupta, Ramani Mohan	Overseer, Executive Engineer's Office, City Division, P W D	Writers' Buildings	ditto
Das Gupta, Ramesh Chandra	General Superintendent of Agencies, Unique Assurance Co, Ld	10, Canning Street	ditto
Das Gupta, Satish Chandra	Assistant Librarian, Bengal Secretariat Library	Writers' Buildings	ditto
Das Gupta, Shishir Chandra, MA, BL	Assistant, Accountant-General's Office, Bengal	Treasury Buildings	ditto
Das Gupta, Shrish Chandra	Lecturer, Government Commercial Institute	11, Hastings Street	ditto

No.	Names	Style or calling	Residence or place of business.	Religion
	Das Gupta, Sitanath	Clerk, D A G P & T Office	7, Koilaghat Street	Hindu
	Das Gupta, Sudhangsu	Accountant (Sugar Department), K C Thapar & Bros, Ld.	5, Royal Exchange Place	ditto
	Das Gupta, Sudhir Chandra, BE, CE	Assistant, Holmes, Wilson & Co, Ld	Norton Buildings	ditto
	Das Gupta, Surendra Nath	Cashier, Union Insurance Society of Canton, Ld	8, Clive Street	ditto
	Das Gupta, Suresh Chandra	Assistant to Inspector of Messes, Calcutta University	Senate House	ditto
	Das Gupta, Suresh Charan	Assistant, Office of the I-G of Police	Writers' Buildings	ditto
	Das Gupta, Umesh Chandra, MA	Examiner of Accounts, Income-tax Office	6, Esplanade, East	ditto
	Das Gupta, Upendra Mohon	Head Assistant, Office of the Supdtg Engineer, S W Circle	Treasury Buildings	ditto
	Das Munshi, Sarat Chandra	Assistant, Commercial Intelligence Department India	1, Council House Street	ditto
	Datta, Abhaya Charan	Clerk, D A G P & T Office	7, Koilaghat Street	ditto
	Datta, Achyuta Kumar, MA, BL	Professor, Vidyasagar College	39, Sankar Ghose Lane	ditto
	Datta, A K	Assistant Bullion-keeper, Calcutta Mint	47, Strand Road	ditto
	Datta, Amarendra Narayan	Assistant, Martin & Co	12, Mission Row	ditto
	Datta, Ambika Ch	Assistant Cashier, Calcutta Improvement Trust	5, Clive Street	ditto
	Datta, Amulya Charan	Assistant, Accountant-General's Office, Bengal	Treasury Buildings	ditto
	Datta, Anath Bandhu	Assistant Chemist, Imperial Chemical Industries (India), Ld	18, Strand Road	ditto
	Datta, Anath Krishna	Overseer, Executive Engineer's Office, City Division, P W D	Writers' Buildings	ditto
	Datta, Anath Nath, BA	Assistant, Accountant-General's Office, Bengal	Treasury Buildings	ditto
	Datta, Annada Prasad	Assistant, Accountant-General's Office, Bengal	Treasury Buildings	ditto
	Datta, Anukul Chandra	Assistant, James Finlay & Co, Ld	1, Clive Street	ditto
	Datta, Anup Krishna	Assistant, Martin & Co	12, Mission Row	ditto
	Datta, Apurba Krishna	Clerk, C O P S's Office. E I R	E I R House	ditto
	Datta, Ashutos	Reviser, Govt of India Press	8, Hastings Street	ditto

Datta, Baidya Nath	Clerk, Ralli Brothers, Ld	16, Hare Street	ditto
Datta, Bankim Chandra, BA	Assistant, Calcutta University	Senate House	ditto
Datta, B B	Clerk, Accounts Office, Calcutta Mint	47, Strand Road	ditto
Datta, B B, MA	Assistant, General Utilities Co	7, Clive Row	ditto
Datta, Bhabani Charan	Clerk, Ralli Brothers, Ld	16, Hare Street	ditto
Datta Bhabatosh, MA	Lecturer, Ripon College	24, Harrison Road	ditto
Datta, Bharat Chandra	Eng Overseer, Calcutta Corporation	79, Cornwallis Street	ditto
Datta, Bhola Nath	Clerk, Turner, Morrison & Co, Ld	6, Lyons Range	ditto
Datta, Bhupati Charan	Assistant Head Clerk, Bengal Waterproof Works, Ld	12, Chowringhee	ditto
Datta, Bimal Chandra	Clerk, Burmah Shell Co of India, Ld	Hongkong House	ditto
Datta, Binode Bihari	Clerk, D A G P & T Office	7, Koilaghat Street	ditto
Datta, Binode Bihari, BA	Assistant, Accountant-General's Office, Bengal	Treasury Buildings	ditto
Datta, B K	Clerk, Remington Rand Inc	3, Council House Street	ditto
Datta, Byomkesh	Salesman, George O Penn & Co	22, Chowringhee	ditto
Datta, Chandi Charan	Clerk, D A G P & T Office	7, Koilaghat Street	ditto
Datta, Chandi Charan, BA	Accountant, Calcutta Mineral Supply Co, Ld	31, Jackson Lane	ditto
Datta, Chandra Mohan	Accountant, Calcutta Insurance, Ld	86, Clive Street	ditto
Datta, Charan Das	Assistant, Bengal Chamber of Commerce	2, Clive Street	ditto
Datta, Charu Chandra	Assistant, Accountant-General's Office, Bengal	Treasury Buildings	ditto
Datta, Chuni Lal, BSc	Demonstrator, Vidyasagar College	39, Sanker Ghose Lane	ditto

No.	Names.	Style or calling.	Residence or place of business.	Religion.
	Datta, Deba Brata	Clerk, D A G P & T Office	7, Koilaghat Street	Hindu
	Datta, Debendra Nath	Assistant, James Finlay & Co, Ld	1, Clive Street	ditto
	Datta, Debi Prasad, MA	Assistant, Controller's Office, Calcutta University	Senate House	ditto
	Datta, Dhirendra Chandra	Assistant, Accountant-General's Office, Bengal	Treasury Buildings	ditto
	Datta, Dhirendra Kumar	Assistant, Accountant-General's Office, Bengal	Treasury Buildings	ditto
	Datta, Dhirendra Lal, BA	Assistant Cashier, Accountant-General's Office, Bengal	Treasury Buildings	ditto
	Datta, Dhirendra Nath	Assistant, Office of the Director of Industries, Bengal	40-1A, Free School Street	ditto
	Datta, Dhirendra Nath	Clerk, Imperial Bank of India	3, Strand Road	ditto
	Datta, Dhirendra Nath	Assistant, European Association	6, Royal Exchange Place	ditto
	Datta, Dhirendra Nath	Overseer, Calcutta Improvement Trust	5, Clive Street	ditto
	Datta, Dhirendra Nath	Clerk, Place, Siddons & Gough	6, Lyons Range	ditto
	Datta, D N	Clerk, E S's Office, Port Commissioners	Strand Road	ditto
	Datta, Durgapada	Clerk, Telegraph Check Office	33, Dalhouse Square, South	ditto
	Datta, Fakir Chand	Accountant License Department, Calcutta Corporation	Municipal Office	ditto
	Datta, Girija Bhusan	Clerk, Liverpool & London & Globe Insurance Co, Ld	26, Dalhousie Square	ditto
	Datta, Girindra Behari, BL	Assessing Inspector, Calcutta Corporation	Municipal Office	ditto
	Datta, Gokul Chandra	Assistant, Excise Commissioner's Office	Writers' Buildings	ditto
	Datta, Gokul Chandra	Clerk, Imperial Bank of India	3, Strand Road	ditto
	Datta, Gopal Chandra	Invoice Clerk, Geo Henderson & Co, Ld	101-1, Clive Street	ditto
	Datta, Gopal Ch, BA	Clerk, D A G P & T Office	7, Koilaghat Street	ditto
	Datta, Gopendranath	Assistant, Calcutta Improvement Trust	5, Clive Street	ditto
	Datta, Harendra Krishna, BA	Clerk, D A G P & T Office	7, Koilaghat Street	ditto

Datta, Hari Charan	Clerk, Burmah Shell Co of India, Ld	Hongkong House	ditto
Datta, Haridas	Clerk, Shaw, Wallace & Co	4, Bankshall Street	ditto
Datta, Hari Kumar	Overseer, District No. II, Calcutta Corporation	22, Mirzapore Street	ditto
Datta, Hari Mohan	Clerk, Shaw, Wallace & Co	4, Bankshall Street	ditto
Datta, Hariprasad	Clerk, Ralli Brothers, Ld	16, Hare Street	ditto
Datta, H C	Assistant, Guest, Keen, Williams, Ld	7, Council House Street	ditto
Datta, H K	Clerk, P & O Banking Corporation, Ld	1, Fairlie Place	ditto
Datta, Hirendra Mohan	Assistant, Accountant-General's Office, Bengal	Treasury Buildings	ditto
Datta, Indu Bhusan	Audit Inspector, Port Commissioners' Office	Strand Road	ditto
Datta, Jatindra Nath, BA	Assistant, Calcutta University	Senate House	ditto
Datta, Jatindra Nath, BA	Offg Accountant, Accountant-General's Office, Bengal	Treasury Buildings	ditto
Datta, Jatindra Nath, BA	Clerk, D A G P & T Office	7, Koilaghat Street	ditto
Datta, Jiban Krishna	Clerk, Booking Section, Port Commissioner's Office	Strand Road	ditto
Datta, Jitendra Lal	Clerk, C O P S's Office, E I R	E I R House	ditto
Datta, Jogesh Chandra, MA	Assistant, Accountant-General's Office, Bengal	Treasury Buildings	ditto
Datta, Kamala Prasad	Assistant, McLeod & Co	28, Dalhousie Square	ditto
Datta, Kangali Charan	Clerk, D A G P & T Office	7, Koilaghat Street	ditto
Datta, Kartic Chandra, MSc	Senior Electrician, Standard Telephones & Cables, Ld	4, Esplanade, East	ditto
Datta, Karuna Charan	Clerk, National Bank of India, Ld	104, Clive Street	ditto
Datta, Kedarnath	Clerk, Ralli Brothers, Ld	16, Hare Street	ditto
Datta, Khagendra Nath	Stenographer, C A O's Office, E I R	E I R House	ditto
Datta, Kiran Chandra	Assistant, Balmer, Lawrie & Co, Ld	103, Clive Street	ditto

No.	Names.	Style or calling	Residence or place of business.	Religion.
	Datta, Kripanath	Book-Keeper, Imperial Tobacco Co of India, Ld	37, Chowringhee	Hindu
	Datta, Krishna Ch	Audit Clerk, Calcutta Improvement Trust	5, Clive Street	ditto
	Datta, Krishna Chandra	Clerk, D A G P & T Office	7, Koilaghat Street	ditto
	Datta, K N	Proprietor, K N Dutt & Co	18, Raja Woodmunt Street	ditto
	Datta, Lal Bihari	Clerk, Imperial Bank of India	3, Strand Road	ditto
	Datta, Lalit Mohan, MSc, I	Clerk, D A G P & T Office	7, Koilaghat Street	ditto
	Datta, Mahendra Lal	Head Draftsman, Engineer's Office, E B R	3, Koilaghat Street	ditto
	Datta, Manasa Charan	Assistant, Accounts Department, Calcutta Corporation	Municipal Office	ditto
	Datta, Mangobinda	Clerk, Agency Deptt, E B R	3, Koilaghat Street	ditto
	Datta, Maniklal, BA	Senior Clerk, Special Officer's Deptt, Calcutta Corporation	Municipal Office	ditto
	Datta, Manindra Nath, MSc	Assistant, Zoological Survey of India	Indian Museum	ditto
	Datta, Manindra Nath	Building Inspector, Calcutta Corporation	Municipal Office	ditto
	Datta, Manmatha Nath	Acting Foreman, Government of India Press	8, Hastings Street	ditto
	Datta, Manmohan	Assistant, Accountant-General's Office, Bengal	Treasury Buildings	ditto
	Datta, Mathura Nath	Clerk, Gillanders, Arbuthnot & Co	8, Clive Street	ditto
	Datta, Mrityunjoy	Clerk, D A G P & T Office	7, Koilaghat Street	ditto
	Datta, N	Head Master, Central Collegiate School	71-2 A, Cornwallis Street	ditto
	Datta, Nabani Mohan	Clerk, Union Insurance Society of Canton, Ld	8, Clive Street	ditto
	Datta, Nagendra Nath	Assistant, Senda & Co (India), Ld	135, Canning Street	ditto
	Datta, Nalin Bihari	Assistant, K C Thapar & Bros, Ld	5, Royal Exchange Place	ditto
	Datta, Nalini Krishna	Assistant, Accountant-General's Office, Bengal	Treasury Buildings	ditto
	Datta, Nanak Chand	Clerk, Office of the Controller of Purchase, Indian Stores Department.	6, Esplanade, East	ditto

Datta, Nanda Lal	Assistant, Imperial Library	6, Esplanade, East	ditto
Datta, Nani Gopal, BA	Clerk, D A G P & T Office	7, Koilaghat Street	ditto
Datta, Narendra Chandra	Assistant, McLeod & Co	28, Dalhousie Square	ditto
Datta, Narendra Kumar	Cashier, North British and Mercantile Insurance Co, Ld	101-1, Clive Street	ditto
Datta, Narendra Nath	Assistant Head Clerk, Imperial Tobacco Co of India, Ld	37, Chowringhee	ditto
Datta, Narendra Nath	Assistant, Commercial Intelligence Deptt, India	1, Council House Street	ditto
Datta, Naresh Chandra	Clerk, Burmah Shell Co of India, Ld	Hongkong House	ditto
Datta, Naresh Chandra	Clerk, I G N & Ry Co, Ld	4, Fairlie Place	ditto
Datta, Naresh Natn	Assistant, Office of the Director of Industries, Bengal	40-1A, Free School Street	ditto
Datta, Netye Chand	Assistant Cashier, National Bank of India, Ld	104, Clive Street	ditto
Datta, Nirmal Chandra	Stenographer, Balmer, Lawrie & Co, Ld	103, Clive Street	ditto
Datta, Nitai Charan	Clerk, Turner, Morrison & Co, Ld	6, Lyons Range	ditto
Datta, Nootbehary	Clerk, Imperial Bank of India	3, Strand Road	ditto
Datta, Nripendra Nath	Accounts Clerk, E B R	3, Koilaghat Street	ditto
Datta, Nripendra Nath	Clerk, D A G P & T Office	7, Koilaghat Street	ditto
Datta, Nripendra Nath, MA	Assistant, Office of the Director of Industries, Bengal	40-1A, Free School Street	ditto
Datta, Pannalal	Assistant, Reserve Bank of India	8, Council House Street	ditto
Datta, Phanindra Nath	Accountant, Workshops, Electrical Division, P W D	Writers' Buildings	ditto
Datta, Prabhas Chandra	Clerk, Ralli Brothers, Ld	16, Hare Street	ditto
Datta, Prabhas Chandra, BA	Assistant, Bengal Secretariat, Finance Department	Writers' Buildings	ditto
Datta, Prabhas Chandra	Clerk, D A G P & T Office	7, Koilaghat Street	ditto
Datta, Prabodh Chandra	Clerk, D A G P & T Office	7, Koilaghat Street	ditto

No.	Names.	Style or calling.	Residence or place of business.	Religion.
	Datta, Prafulla Kumar ..	Assistant, Accountant-General's Office, Bengal ..	Treasury Buildings ..	Hindu
	Datta, Pramode Kumar, BA	Head Clerk, Lighting Department, Calcutta Corporation	Municipal Office ..	ditto
	Datta, Pulin Bihari, BSC	Divisional Accountant, Accountant-General's Office, Bengal	Treasury Buildings ..	ditto
	Datta, Pulin Bihari ..	Accountant, American Foreign Insurance Association	8, Clive Street ..	ditto
	Datta, Pulin Chandra, BA	Clerk, D A G P & T Office	7, Koilaghat Street ..	ditto
	Datta, Purna Chandra ..	Assistant, Mackinnon, Mackenzie & Co	16, Strand Road ..	ditto
	Datta, Rabindra Chandra, BSC	Clerk, C A's Office, E I R	E I R House ..	ditto
	Datta, Rabindra Krishna, BA	Clerk, Treasury Department, Calcutta Corporation ..	Municipal Office ..	ditto
	Datta, Rajendra Nath	Assistant, Office of the Geological Survey of India ..	27, Chowringhee ..	ditto
	Datta, Raj Krishna ..	Assistant, Calcutta Collectorate	3, Charnock Place ..	ditto
	Datta, Ramanath ..	Assistant, Senda & Co (India), Ld	135, Canning Street ..	ditto
	Datta, Ramesh Chandra, BA	Clerk, Agency Department, E B R	3, Koilaghat Street ..	ditto
	Datta, Ranajoy	Stenographer, Office of the Inspector of Schools, Presy Divn	40-1A, Free School Street	ditto
	Datta, R C ..	Assistant Bullion Keeper, Calcutta Mint ..	47, Strand Road ..	ditto
	Datta, Sanyasidas, BSC, BA	Head Clerk, Income-Tax Office	3, Government Place, West	ditto
	Datta, Sarit Nath ..	Assistant, Accounts Department, Calcutta Corporation	Municipal Office ..	ditto
	Datta, Satish Chandra ..	Assistant, Mackinnon, Mackenzie & Co	16, Strand Road ..	ditto
	Datta, Satish Chandra ..	Head Assistant (Policy), Unique Assurance Co, Ld	10, Canning Street ..	ditto
	Datta, Satish Chandra, I	Assistant, Accountant-General's Office, Bengal ..	Treasury Buildings ..	ditto
	Datta, Satish Chandra, II, BA	Assistant, Accountant-General's Office, Bengal ..	Treasury Buildings ..	ditto
	Datta, Satish Chandra, III, BA	Assistant, Accountant-General's Office, Bengal ..	Treasury Buildings ..	ditto
	Datta, Satish Chandra ..	Head Assistant, Stamp Department, Calcutta Collectorate	3, Charnock Place ..	ditto
	Datta, Satish Chandra	Clerk, D A G P & T Office	7, Koilaghat Street ..	ditto

Datta, Satish Chandra	Accountant, Blackwood, Bryson & Co, Ld	2, Mangoe Lane	ditto
Datta, Satish Ch, BA	Clerk, Telegraph Check Office	33, Dalhousie Square, South	ditto
Datta. Satya Charan	Cashier, Bengal Club	Bengal Club	ditto
Datta, Satya Charan, BSc	Clerk, Calcutta Improvement Trust	5, Clive Street	ditto
Datta, Shankar Nath	Assistant, Bengal Secretariat Record Room	Writers' Buildings	ditto
Datta, Sharat Chandra	Clerk, Ralli Brothers, Ld	16, Hare Street	ditto
Datta, Sharat Chandra, BSc	Assistant Teacher, Collins Institute	140, Dharamtala Street	ditto
Datta, Sharat Chandra	Assistant, National Insurance Co, Ld	7, Council House Street	ditto
Datta, Shashi Bhusan	Assistant, Mackinnon, Mackenzie & Co	16, Strand Road	ditto
Datta, Shashi Bhusan, BA	Clerk, Agent's Office, E I R	E I R House	ditto
Datta, Shibprasanna	Engineer, F & C Osler, Ld	12, Old Court House Street	ditto
Datta, Shishir K	Clerk, Telegraph Check Office	33, Dalhousie Square, South	ditto
Datta, Shivapada	Clerk, Place, Siddons & Gough	6, Lyons Range	ditto
Datta, Shripati	Assistant, Mackinnon, Mackenzie & Co	16, Strand Road	ditto
Datta, Shripati Charan	Head Clerk, Bengal Smoke Nuisances Commission	3, Charnock Place	ditto
Datta, Shrish Chandra	Assistant, Reserve Bank of India	8, Council House Street	ditto
Datta, Shyamlal	Assistant, Price, Waterhouse, Peat & Co	B-4, Clive Buildings	ditto
Datta, S N	Accountant, Robert Ingham Clark & Co, Ld	2, Clive Row	ditto
Datta, Sudeb Chandra, AMEE	Inspector for Electric Installation, Calcutta Corporation	Municipal Office	ditto
Datta, Sudhindra Nath, BA	Assistant, Accountant-General's Office, Bengal	Treasury Buildings	ditto
Datta, Sudin Prakash, BA	Assistant, Accountant-General's Office, Bengal	Treasury Buildings	ditto

No.	Names.	Style or calling.	Residence or place of business.	Religion.
	Datta, Sukomal, BA	Sub-Head, C A's Office, E I R	E I R House	Hindu
	Datta, Surendra Chandra, MA	Assistant, Commercial Intelligence Department, India	1, Council House Street	ditto
	Datta, Sushil Kumar	Assistant, Commercial Intelligence Department, India	1, Council House Street	ditto
	Datta, Sushil Kumar	Clerk, Imperial Bank of India	3, Strand Road	ditto
	Datta, Sushobhan, MSc	Professor, City College	102-1, Amherst Street	Brahmo
	Datta, Tarak Nath, BA	Accountant, Accountant-General's Office, Bengal	Treasury Buildings	Hindu
	Datta, Tarak Nath	Stenographer, Bengal Secretariat, Finance Department	Writers' Buildings	ditto
	Datta, Tinkari	Assistant, Balmer, Lawrie & Co, Ld	103, Clive Street	ditto
	Datta, T P	Assistant, Jessop & Co, Ld	93, Clive Street	ditto
	Datta, Umapada	Clerk, C O P S's Office, E I R	E I R House	ditto
	Datta Chaudhuri, Makhan Lal	Assistant, The Eastern Bank, Ld	9, Clive Street	ditto
	Datta Chaudhuri, Samatul Chandra, BL	Examiner of Accounts, Income-tax Office	3, Government Place, West	ditto
	Datta Gupta, Dhirendra Nath	Engineer, Standard Sanitary Agency, Ld	64, Bowbazar Street	ditto
	Datta Gupta, Hem Ch	Demonstrator, Presidency College	86-1, College Street	ditto
	Datta Gupta, J C	Assistant, Jessop & Co, Ld	93, Clive Street	ditto
	Datta Gupta, J L	Traffic Inspector, E B R	3, Koilaghat Street	ditto
	Datta Gupta, Kumudini Kanta	Clerk, Ralli Brothers, Ld	16, Hare Street	ditto
	Datta Gupta, Satish Chandra, BA	Assistant, Office of the Director of Public Instruction, Bengal	Writers' Buildings	ditto
	Datta Ray, Abani Kishore, BSc, BT	Assistant Master, Hare School	87, College Street	ditto
	Datta Ray, Dhirendra Nath	Assistant, Accountant-General's Office, Bengal	Treasury Buildings	ditto
	Datta Ray, S K	Accountant, C A O's Office, E I R	E I R House	ditto

Daw, Bibhuti Bhusan	Salesman, Greaves, Cotton & Co, Ld	60, Dharamtala Street	ditto
Daw, Binaya Krishna, BSc	Clerk, D A G P & T Office	7, Koilaghat Street	ditto
Daw, Dulal Chandra	Clerk, D A G P & T Office	7, Koilaghat Street	ditto
De, Abani Mohan	Assistant, Superintending Engineer's Office (S Circle), P W D	3, Government Place, West	ditto
De, Akhil Chandra	Accountant, Government of India Press	8, Hastings Street	ditto
De, Akshaya Kumar	Clerk, Shaw, Wallace & Co	4, Bankshall Street	ditto
De, Amarendra Nath	Clerk, Turner, Morrison & Co, Ld	6, Lyons Range	ditto
De, Amarendra Nath (Dr), MB	Sanitary Officer, Calcutta Corporation	22, Mirzapore Street	ditto
De, Amulya Charan	Supvg Surveyor, Calcutta Improvement Trust	5, Clive Street	ditto
De, Amulyadhan, BA, GDA	Examiner of Accounts, Income-tax Office	6, Esplanade, East	ditto
De, Amulyadhan	Clerk, Lloyds Bank, Ld	101-1, Clive Street	ditto
De, Ashutosh	Assistant, Accountant-General's Office, Bengal	Treasury Buildings	ditto
De, Ashutos	Assistant, Indian Association for the Cultivation of Science	210, Bowbazar Street	ditto
De, Atul Krishna	Assistant, Martin & Co	12, Mission Row	ditto
De, Atul Krishna	Clerk, Ralli Brothers, Ld	16, Hare Street	ditto
De, Baidyanath, BA	Assistant, Accountant-General's Office, Bengal	Treasury Buildings	ditto
De, Balai Chand	Assistant, Andrew. Yule & Co, Ld	8, Clive Row	ditto
De, Balai Chand	Inspector, License Department, Calcutta Corporation	Municipal Office	ditto
De, Basudev, BA	Supervisor, Telegraph Check Office	33, Dalhousie Square, South	ditto
De, Bata Krishna	Clerk, D A G P & T Office	7, Koilaghat Street	ditto
De, Beni Madhav	Claims Inspector, E B R	3, Kaylaghat Street	ditto
De, Bhabani Charan	Clerk, Chartered Bank of India, Australia and China	1-1, Clive Street	ditto

No.	Names.	Style or calling.	Residence or place of business.	Religion.
	De, Bhagabati Kumar	Assistant, Grahams Trading Co (India), Ld	6, Lyons Range	Hindu
	De, Bhupendra Nath	Clerk, D A G P & T Office	7, Koilaghat Street	ditto
	De, Binayeshwar	Assistant, Office of the Director of Public Health, Bengal	Writers' Buildings	ditto
	De, Bishnu, MA	Lecturer, Ripon College	24, Harrison Road	ditto
	De, Bishnupada	Assistant, Commercial Intelligence Deptt, India	1, Council House Street	ditto
	De, Bishweswar	Clerk, D A G P & T Office	7, Koilaghat Street	ditto
	De, Chandra Shekhar	Assistant, Burn & Co, Ld	12, Misson Row	ditto
	De, Debiprasad	Ledger-keeper, Imperial Tobacco Co of India, Ld	37, Chowringhee	ditto
	De, Dhirendra Nath, BA	Assistant, Accountant-General's Office, Bengal	Treasury Buildings	ditto
	De, Dhirendra Nath	3rd Asstt Hd Clerk, Imperial Tobacco Co of India, Ld	37, Chowringhee	ditto
	De, Dhirendra Nath	Assistant, Babcock & Wilcox, Ld	4, Bankshall Street	ditto
	De, Dulal Chand, BSc	Assistant Analyst, Bengal Public Health Laboratory	Chittaranjan Avenue	ditto
	De, Dunia Lal, MB	Sanitary Officer, Calcutta Corporation	79, Cornwallis Street	ditto
	De, Gajendra N	Assistant, Balmer Lawrie & Co, Ld	103, Clive Street	ditto
	De, Ghanashyam	Clerk, D A G P & T Office	7, Koilaghat Street	ditto
	De, Gokul Ch	Clerk, Telegraph Check Office	33, Dalhousie Square, South	ditto
	De, Gora Chand	Clerk, Burmah Shell Co of India, Ld	Hongkong House	ditto
	De, Gour Mohan	Chemist and Technologist, Dey & Co	41-B, Clive Street	ditto
	De, Gour Pada	Clerk, Chartered Bank of India, Australia and China	1-1, Clive Street	ditto
	De, Guha Ram	Sub-Accountant, Grindlay & Co, Ld	6, Church Lane	ditto
	De, Haran Chandra, BSc	Demonstrator, Vidyasagar College	39, Shankar Ghose Lane	ditto

De, Harish Chandra	Clerk, Collection Deptt, Calcutta Corporation	Municipal Office	ditto
De, H C	Assistant, P & O Banking Corporation, Ld	1, Fairlie Place	ditto
De, Jatindra Nath	Assistant, Calcutta Improvement Trust	5, Clive Street	ditto
De, Jitendra Krishna	Assistant, Accountant-General's Office, Bengal	Treasury Buildings	ditto
De, Jitendra Nath	Assistant, Controller's Office, Calcutta University	Senate House	ditto
De, Jitendra Nath	Head Draftsman, C E's Office, E I R	E I R House	ditto
De, Jitendra Nath	Assistant, Andrew, Yule & Co, Ld	8, Clive Row	ditto
De, Jogendra Kumar	Assistant, Lionel Edwards, Ld	D-1, Clive Buildings	ditto
De, Jogendra Nath	Assistant, Accountant-General's Office, Bengal	Treasury Buildings	ditto
De, Jyotish Chandra	Assistant, Accountant-General's Office, Bengal	Treasury Buildings	ditto
De, Jyotish Chandra	Head Assistant Cashier, Calcutta Improvement Trust	5, Clive Street	ditto
De, Kali Charan	C O Inspector, Traffic Department, E B R	3, Kaylaghat Street	ditto
De, Kali Kinkar	Clerk, D A G P & T Office	7, Koilaghat Street	ditto
De, Khagendra Nath	Clerk, P S Office, E I R	E I R House	ditto
De, Krishna Das	Assistant, Macneill & Co	2, Fairlie Place	ditto
De, Krishna Das	Clerk, D A G P & T Office	7, Koilaghat Street	ditto
De, Kshetrapada	Assistant, Bengal Secretariat, Appointment Department	Writers' Buildings	ditto
De, Manik Chand	Clerk, Shaw, Wallace & Co	4, Bankshall Street	ditto
De, Manik Lal	Assistant, James Finlay & Co, Ld	1, Clive Street	ditto
De, Manindra Chandra	Assistant, Mercantile Marine Department	15-1, Strand Road	ditto
De, Manindra Nath	Clerk, C O P S Office, E I R	E I R House	ditto

No.	Names.	Style or calling.	Residence or place of business.	Religion.
	De, Manmatha Nath, BA	Clerk, D A G P & T Office	7, Koilaghat Street	Hindu
	De, Manmatha Nath	Cashier, Begg Dunlop & Co, Ld	2, Hare Street	ditto
	De, Manmatha Nath	Accountant, Minimax, Ld	Mercantile Buildings	ditto
	De, Matilal	Accountant, American Foreign Insurance Association	8, Clive Street	ditto
	De, Mukunda Lal, BA	Clerk, Calcutta Improvement Trust	5, Clive Street	ditto
	De, Murari Mohan	Clerk, Burmah Shell Co of India, Ld	Hongkong House	ditto
	De, Nagendra Nath	Cashier, Bengal Iron Co, Ld	4, Lyons Range	ditto
	De, Nanda Lal	Assistant, Dey & Co	41-B, Clive Street	ditto
	De, Nani Gopal	Head Assistant, Pigott Chapman & Co	6, Lyons Range	ditto
	De, Nani Lal	Clerk, R Sim & Co, Ld	2, Clive Row	ditto
	De, Narayan Chandra	Cashier, Mackenzie, Lyall & Co	5, Mission Row	ditto
	De, Narayan Das	Cashier, Royal Insurance Co, Ld	26 & 27, Dalhousie Square	ditto
	De, Nilmani	Accountant, P H D, Bengal	3, Charnock Place	ditto
	De, Nilmani	Assistant, Accountant-General's Office, Bengal	Treasury Buildings	ditto
	De, Nimai Chand	Assistant, Grahams Trading Co (India), Ld	6, Lyons Range	ditto
	De, Nirendra Narayan	Clerk, Shaw, Wallace & Co	4, Bankshall Street	ditto
	De, Nirmal Chandra, MSC	Demonstrator, Scottish Church College	4, Cornwallis Square	ditto
	De, Nirmal Chandra, BSC	Assistant, Accountant-General's Office, Bengal	Treasury Buildings	ditto
	De, Nirmal Prakash, MA, BL	Assistant, Calcutta University	Senate House	ditto
	De, Nirode Kumar	Clerk, Imperial Bank of India	3, Strand Road	ditto

De, Nitai Chand	Assistant Book-keeper, Imperial Tobacco Co of India, Ld	37, Chowringhee	ditto
De, N N	Clerk, Mackinnon Mackenzie & Co	8, Strand Road	ditto
De, Nripendra Nath	Assistant, Bengal Chemical & Pharmaceutical Works, Ld	31, Chittaranjan Avenue, South	ditto
De, Nritya Gopal	Clerk, Ralli Brothers, Ld	16, Hare Street	ditto
De, Phani Bhushan	Clerk, D A G P & T Office	7, Koilaghat Street	ditto
De, Phani Bhusan	Clerk, Shaw, Wallace & Co	4, Bankshall Street	ditto
De, Phanindra Nath, BA	Assistant Reader, Bengal Library	Writers' Buildings	ditto
De, Prabodh Chandra	Overseer, Western Electrical Division, PWD	Writers' Buildings	ditto
De, Prafulla Kumar	Assistant, Dey & Co	41-B, Clive Street	ditto
De, Pramatha Nath	Sec Head Clerk, C E's Office, E I R	E I R House	ditto
De, Pranabesh Kumar	Assistant, Brooke Bond (India), Ld	2, Metcalfe Street	ditto
De, Pran Gobinda	Clerk, Ralli Brothers, Ld	16, Hare Street	ditto
De, Pravash Chandra, MA	Lecturer, Ripon College	24, Harrison Road	ditto
De, Purna Chandra	Cashier, Planters' Stores & Agency Co, Ld	11, Clive Street	ditto
De, Rabindra Nath	Clerk, D A G P & T Office	7, Koilaghat Street	ditto
De, Ramanath	Head Estimator, Calcutta Improvement Trust	5, Clive Street	ditto
De, Ramesh Chandra	Assistant, Accountant-General's Office, Bengal	Treasury Buildings	ditto
De, Ranendra Krishna	Clerk, Alliance Assurance Co, Ld	2, Hare Street	ditto
De, Rasik Lal	Assistant, Andrew, Yule & Co, Ld	8, Clive Row	ditto
De, Satish Chandra	Clerk, C E S C, Ld	Victoria House	ditto
De, Satish Chandra, MA	Assistant, Accountant-General's Office, Bengal	Treasury Buildings	ditto

No.	Names.	Style or calling.	Residence or place of business.	Religion.
	De, Shailendra Krishna ..	Assistant, Holmes, Wilson & Co, Ld ..	Norton Buildings ..	Hindu
	De, Shailendra Kumar, BA	Assistant, Commercial Intelligence Department, India	1, Council House Street ..	ditto
	De, Shailendra Nath ..	Assistant, Accountant-General's Office, Bengal ..	Treasury Buildings ..	ditto
	De, Sharat Chandra ..	Assistant, Surveyor-General's Office ..	13, Wood Street ..	ditto
	De, Sharat Kumar, BA ..	Assistant, Surveyor-General's Office ..	13, Wood Street ..	ditto
	De, Smritendra Nath, BA	Assistant, Accountant-General's Office, Bengal ..	Treasury Buildings ..	ditto
	De, Subal Chandra ..	Assistant, Presidency Commissioner's Office ..	3, Charnock Place ..	ditto
	De, Subodh Chandra ..	Cashier, Office of the Controller of Currency ..	Treasury Buildings ..	ditto
	De, Sudhir Chandra ..	Assistant, Burn & Co, Ld ..	12, Mission Row ..	ditto
	De, Surath Kumar, BA ..	Assistant, Accountant-General's Office, Bengal ..	Treasury Buildings ..	ditto
	De, Surendra Mohan (Dr), LMS	Sanitary Officer, Calcutta Corporation ..	22, Mirzapore Street ..	ditto
	De, Surjya Kanta ..	Clerk, D A G P & T Office ..	7, Koilaghat Street ..	ditto
	De, T N ..	Assistant, Pigott Chapman & Co ..	6, Lyons Range ..	ditto
	De, Tarini Charan ..	Cashier, Burmah Shell Co of India, Ld ..	Hongkong House ..	ditto
	Deb, Arunkumar ..	Assistant, Commercial Intelligence Department, India	1, Council House Street ..	ditto
	Deb, Ganendra Krishna ..	Assistant, Commercial Intelligence Department, India	1, Council House Street ..	ditto
	Deb, Harendra Krishna ..	Clerk, C E S C, Ld ..	Victoria House ..	ditto
	Deb, Narendra Kumar ..	Surveyor, Calcutta Improvement Trust ..	5, Clive Street ..	ditto
	Deb, Phanindra Lal ..	Assistant, Accountant-General's Office, Bengal ..	Treasury Buildings ..	ditto

Deb, Sharat Chandra	Cheeking Assistant, Imperial Bank of India	3, Strand Road	ditto
Deb, Upendra Nath	Clerk, Office of the Controller of Purchase, Indian Stores Department	6, Esplanade, East	ditto
Deb Mallik, Sirish Chandra, LMS	Sanitary Officer, Calcutta Corporation	79, Cornwallis Street	ditto
Debnath, Chintaharan	Stenographer, Stewart & Co	8, Clive Street	ditto
Deekshither, N Nataraja	Accountant, Bell's Asbestos & Engineering (India), Ld	10, Clive Street	ditto
Dehlavi, Sikandar Khan	P A to General Manager, Eastern Federal Union Insce, Co, Ld	9, Clive Street	Mahomedan
Derasatullah	Assistant, Bengal Secretariat, Revenue Department	Writers' Buildings	ditto
Desai, D C	Assistant Bridge Engineer, E I R	E I R House	Christian
Desai, G R	Assistant, National Insurance Co, Ld	7, Council House Street	Hindu
Desai, Magan Lal Khandubhai, BA	Assistant Secretary, East and West Insurance Co, Ld	37, Strand Road	ditto
Dewan, Safyatulla, BSc	Clerk, D A G P & T Office	7, Koilaghat Street	Mahomedan
Dhar, Avilas Ratan	Cashier, Burmah Shell Co of India, Ld	Hongkong House	Hindu
Dhar, Braja Lal	Clerk, D A G P & T Office	7, Koilaghat Street	ditto
Dhar, Deb Sebak	Clerk, Ralli Brothers, Ld	16, Hare Street	ditto
Dhar, D C	Assistant, Mackinnon, Mackenzie & Co	8, Strand Road	ditto
Dhar, Lakshan Chandra	Assistant, James, Finlay & Co, Ld	1, Clive Street	ditto
Dhar, Madhusudan	Assistant, Jardine Skinner & Co	4, Clive Row	ditto
Dhar, Narendra Nath	Assistant, Accountant-General's Office, Bengal	Treasury Buildings	ditto
Dhar, Prasad Das	Clerk, Imperial Bank of India	3, Strand Road	ditto
Dhar, Pratap Chandra	Clerk, Mackinnon Mackenzie & Co	16, Strand Road	ditto
Dhar, Pyari Mohan	Mg Agent, Incorporated Insurance, Ld	5, Clive Ghat Street	ditto
Dhar, Ram Chandra	Cashier, Jardine, Skinner & Co	4, Clive Row	ditto

No.	Names.	Style or calling.	Residence or place of business.	Religion.
	Dhar, Suresh Chandra	Demonstrator, Presidency College	86-1, College Street	Hindu
	Dhar, Thakur Das	Assistant, James Finlay & Co, Ld	1, Clive Street	ditto
	Dhara, Surendra Nath	Clerk, Telegraph Check Office	33, Dalhousie Square, South	ditto
	Dass, Robin	Asstt Curator, Prints, Map Record and Issue Office, Survey of India.	13, Wood Street	Christian
	Dubash, M F	Assistant, Burn & Co, Ld	12, Mission Row	Zoroastrian
	Dustoor, Byram Sorabji	Assistant, Ralli Brothers, Ld	16, Hare Street	ditto
	Elias, Syed Md (Maulvi), BA	Assistant, Bengal Secretariat, Appointment Department	Writers' Buildings	Mahomedan
	F			
	Faseeh, Abul Huffaz Md	Lecturer, Calcutta Madrassah	19, Wellesley Square	Mahomedan
	Fazlur, Rahman Baqui	Lecturer, Calcutta University	Senate House	ditto
	Furdonji, Merwanjee	Sr Assistant, Testing Department, C E S C, Ld	Victoria House	Zoroastrian
	G			
	Gaffur, Maulvi Abdul	Clerk, Agent's Office, E B R	3, Kaylaghat Street	Mahomedan
	Gandhi, Nadir Dhanjishaw	Accountant, Central Bank of India, Ld	10, Lindsay Street	Hindu
	Ganeriwalla, Ramkumar	Assistant, Bagla & Co	7, Lyons Range	ditto
	Ganguli, Abhayapada, BA	Clerk, D A G P & T Office	7, Koilaghat Street	ditto
	Ganguli, Ahibhusan	Assistant, Ludlow Jute Co, Ld	7, Royal Exchange Place	ditto
	Ganguli, Amal Chandra (Dr)	Assistant, Mosquito Controlling Office, Calcutta Corporation	Municipal Office	ditto
	Ganguli, Amulya Charan	Clerk, Works Department, *Statesman*, Ld	Statesman House	ditto
	Ganguli, Anath Bandhu	Assistant, Bengal Secretariat, Appointment Department	Writers' Buildings	ditto
	Ganguli, Anil Kumar, BSc	Head Draftsman, Spl Officer's Deptt, Calcutta Corporation	Municipal Office	ditto
	Ganguli, Ashutos	Chief Clerk, C E S C, Ld	Victoria House	ditto

Ganguli, Ashutos	Book-keeper, Jardine, Skinner & Co	4, Clive Row	ditto
Ganguli, Ashutos	Assistant, Central Stationery Office	3, Church Lane	ditto
Ganguli, Ashutos, BA	Head Clerk, Executive Engineer's Office, Damodar Division	Treasury Buildings	ditto
Ganguli, Ashutos	Assistant, James, Finlay & Co, Ld	1, Clive Street	ditto
Ganguli, Atul Chandra, BA	Clerk, Assessor's Department, Calcutta Corporation	Municipal Office	ditto
Ganguli, Atul Krishna	Assistant, Macneill & Co	2, Fairlie Place	ditto
Ganguli, B, BSc	Partner, Ganguli & Chatterjea	30, Clive Street	ditto
Ganguli, Bhabatos, MA	Assistant, Bengali Translator's Office	Writers' Buildings	ditto
Ganguli, Bhudeb	Clerk, Imperial Bank of India	3, Strand Road	ditto
Ganguli, Bhupendra Chandra	Clerk, C M E's Office, E I R	E I R House	ditto
Ganguli, Bidhu Bhusan	Stenographer, Burmah Shell Co of India, Ld	Hongkong House	ditto
Ganguli, Bihari Lal	Clerk, Turner, Morrison & Co, Ld	6, Lyons Range	ditto
Ganguli, Bijay Krishna	Clerk, C E S C, Ld	Victoria House	ditto
Ganguli, Chandra Nath	Clerk, Royal Insurance Co, Ld	26 & 27, Dalhousie Square	ditto
Ganguli, D	Audit Inspector, Port Commissioners' Office	Strand Road	ditto
Ganguli, D C	Commercial Assistant, Reuters, Ld	7, Hare Street	ditto
Ganguli, Dinabandhu, BA	Reader, Government of India Press	8, Hastings Street	ditto
Ganguli, Durga Prasanna	Clerk, I G N & Ry Co, Ld	Nimtolla Ghat	ditto
Ganguli, Gopi Mohan	Clerk, Telegraph Check Office	33, Dalhousie Square, South	ditto
Ganguli, Harendra Kumar	Clerk, C C M's Office, E I R	E I R House	ditto

No.	Names.	Style or calling.	Residence or place of business.	Religion.
	Ganguli, Harendra Lal	Assistant, Alliance Assurance Co, Ld	2, Hare Street	Hindu
	Ganguli, Hari Charan	Clerk, Telegraph Check Office	33, Dalhousie Square, South	ditto
	Ganguli, Haridas	Lighting Supervisor, Calcutta Corporation	Municipal Office	ditto
	Ganguli, Haridas, MSc	Probationer, Chemical Examiner's Department, Bengal	Medical College	ditto
	Ganguli, Hari Prasanna	Stenographer, Harrisons and Crosfield, Ld	6, Church Lane	ditto
	Ganguli, Heramba Chandra, BA	Assistant, Accountant-General's Office, Bengal	Treasury Buildings	ditto
	Ganguli, Indu Bhusan	Accountant, Plummer Bros & Co	5 & 6, Fancy Lane	ditto
	Ganguli, Janaki Kanta	Assistant, Lovelock & Lewes	4, Lyons Range	ditto
	Ganguli, Jiban Bhusan	Clerk, National Bank of India, Ld	104, Clive Street	ditto
	Ganguli, Jiban Krishna	Cashier, Saturday Club	7, Wood Street	ditto
	Ganguli, Kanti Ch	Clerk, D A G P & T Office	7, Koilaghat Street	ditto
	Ganguli, Kedareshwar	Clerk, W T Henley's Telegraph Works Co, Ld	Old Court House Corner	ditto
	Ganguli, Krishnadhan	Assistant, Price, Waterhouse, Peat & Co	B-4, Clive Buildings	ditto
	Ganguli, Lalit Mohan	Assistant, Accountant-General's Office, Bengal	Treasury Buildings	ditto
	Ganguli, Lalit Mohan	Clerk, Telegraph Check Office	33, Dalhousie Square, South	ditto
	Ganguli, Manindra Nath	Surveyor and Estimator, Calcutta Corporation	Municipal Office	ditto
	Ganguli, Michri Mohan	Clerk, D A G P & T Office	7, Koilaghat Street	ditto

Ganguli, Nagendra Nath ..	Assistant, Accountant-General's Office, Bengal ..	Treasury Buildings ..	ditto
Ganguli, Nani Gopal ..	Assistant, Income-tax Office ..	1, Hare Street ..	ditto
Ganguli, Narendra Nath ..	Clerk, Shaw, Wallace & Co ..	4, Bankshall Street ..	ditto
Ganguli, N N ..	Clerk, Accounts Office, Calcutta Mint ..	47, Strand Road ..	ditto
Ganguli, Panchanan ..	Assistant, Lionel Edwards, Ld ..	D-1, Clive Buildings ..	ditto
Ganguli, Pashupati ..	Accountant, South British Insurance Co, Ld ..	5, Clive Street ..	ditto
Ganguli, Pashupati ..	Clerk, C E S C, Ld ..	Victoria House ..	ditto
Ganguli, Phanindra Nath, MA, GDA	Examiner of Accounts, Income-tax Office ..	1, Hare Street ..	ditto
Ganguli, Prabodh Chandra ..	Assistant, Mackinnon, Mackenzie & Co ..	16, Strand Road ..	ditto
Ganguli, Pramatha Nath ..	Clerk, Central Registery, E I R ..	E I R House ..	ditto
Ganguli, Pramatha Nath ..	Chemical Assistant, Central Stationery Office ..	3, Church Lane ..	ditto
Ganguli, Prantos ..	Assistant, Office of the I-G of Registration, Bengal ..	Writers' Buildings ..	ditto
Ganguli, Preeti Kumar ..	Clerk, Post Audit, Port Commissioners' Office ..	Strand Road ..	ditto
Ganguli, R ..	Assistant, Mackinnon, Mackenzie & Co ..	8, Strand Road ..	ditto
Ganguli, Rajendra Nath ..	Clerk, Gillanders, Arbuthnot & Co ..	8, Clive Street ..	ditto
Ganguli, Rajendra Nath ..	Assistant, Office of the Supdg Engineer, Central Circle, P W D. ..	Writers' Buildings ..	ditto
Ganguli, Rajendra Nath ..	Assistant, Explosives Office ..	1, Council House Street ..	ditto
Ganguli, Sasthidas, BA ..	Assistant, Calcutta University ..	Senate House ..	ditto
Ganguli, Shailendra Nath ..	Assistant Reporter, Secretary's Department, Calcutta Corporation	Municipal Office ..	ditto
Ganguli, Shamlal ..	Clerk, Burmah Shell Co of India, Ld ..	Hongkong House ..	ditto

Names.	Style or calling.	Residence or place of business.	Religion.
Ganguli, Shibnath ..	Assistant, Office of the Supdg. Engineer, S Circle, P W D	3, Government Place, West	Hindu
Ganguli, Shreedam Ch ..	Clerk, Turner, Morrison & Co, Ld	6, Lyons Range	ditto
Ganguli, Shripati, BL ..	Clerk, C R E's [Office, P & A Circle	Fort William	ditto
Ganguli, S K ..	Assistant, Barry & Co	2, Fairlie Place	ditto
Ganguli, S N ..	Assistant, Jessop & Co, Ld	93, Clive Street	ditto
Ganguli, S R ..	Clerk, C E S C, Ld	Victoria House	ditto
Ganguli, Subodh Chandra ..	Head Clerk, Imperial Bank of India	3, Strand Road	ditto
Ganguli, Subodh Kumar ..	Clerk, C A O's Office, E I R	E I R House	ditto
Ganguli, Sudhangsu Kumar, B SC, GDA	Examiner of Accounts, Income-tax Office	3, Government Place, West	ditto
Ganguli, Sudhir Ch ..	Head Clerk, Traffic Department, E B R	3, Kaylaghat Street	ditto
Ganguli, Sudhir Ranjan..	Clerk, Accounts Office, E I R	E I R House	ditto
Ganguli, Surendra Nath ..	Book-keeper, Imperial Tobacco Co of India, Ld	37, Chowringhee	ditto
Ganguli. Surendra Nath ..	Head Assistant, Presidency College	86-1, College Street	ditto
Ganguli, Sushil Kumar ..	Clerk, D A G P & T Office	7, Koilaghat Street	ditto
Ganguli, Tarakali ..	Assistant, Legislative Department, Bengal	Council House	ditto
Ganguli, Tarakdas ..	Head Clerk, Traffice Department, E B R	3, Koilaghat Street	ditto
Ganguli, Tarak Nath ..	Clerk, Telegraph Check Office	33, Dalhousie Square, South	ditto
Ganguli, Tulsi Lochan ..	Stenographer, Bengal Secretariat, Finance Department	Writers' Buildings	ditto
Ganguli, Umapati ..	Assistant, Superintending Engineer's Office, Central Circle, P W D	Writers' Buildings	ditto
Ganguli, Upendra Nath ..	Clerk, Telegraph Check Office	33, Dalhousie Square, South	ditto

Garg, Balmukund	P A to the Mg Agents, National Cement Mines & Industries, Ld.	10, Clive Row	ditto
Ghatak, Akshaya Kumar	Clerk, Office of the Chief Mining Engineer, Railway Board	1, Council House Street	ditto
Ghatak, Bibhuti Prasanna, BA	Lecturer, Government Commercial Institute	11, Hastings Street	ditto
Ghatak, Jyotish Chandra, MA	Lecturer, Ripon College	24, Harrison Road	ditto
Ghatak, Kshetra Mohan	2nd Assistant Head Clerk, Imperial Tobacco Co of India, Ld	37, Chowringhee	ditto
Ghatak, Lalit Mohan	Clerk, Ralli Brothers, Ld	16, Hare Street	ditto
Ghatak, Manmohan	Clerk, Burmah Shell Co of India, Ld	Hongkong House	ditto
Ghatak, Nagendra Nath	Hd Clerk, Ex Engineer's Office, Western Electrical Dn, P W D	Writers' Buildings	ditto
Ghatak, Nakuleswar	Clerk, Post Audit, Port Commissioners' Office	Strand Road	ditto
Ghatak, S M	Inspector, Oriental Government Security Life Assurance Co, Ld	2, Clive Row	ditto
Ghatak, Sudin Chandra	Assistant, Accountant-General's Office, Bengal	Treasury Buildings	ditto
Ghosha, Ajatsatru	Dy Cashier, Chartered Bank of India, Australia and China	1-1, Clive Street	ditto
Ghosal, Ashutos	Assistant, Commercial Intelligence Department	1, Council House Street	ditto
Ghosal, Atul Krishna	Head Clerk, Income-tax Office	6, Esplanade, East	ditto
Ghosal, Bankim Chandra	Assistant, Sun Life of Canada	12, Dalhousie Square, East	ditto
Ghosal, B D	Assistant, Barry & Co	2, Fairlie Place	ditto
Ghosal, Bepin Behari	Assistant, Accountant-General's Office, Bengal	Treasury Buildings	ditto
Ghosal, Bhupati Charan, BA	Head Clerk, Income-tax Office	3, Government Place, West	ditto
Ghosal, Bibhuti Bhusan	Assistant, McLeod & Co	28, Dalhousie Square	ditto
Ghosal, Bijaya Krishna	Accountant, Accountant-General's Office, Bengal	Treasury Buildings	ditto
Ghosal, Binaya Krishna	Steno-typist, W T Henley's Telegraph Works Co, Ld	Old Court House Corner	ditto
Ghosal, Bishnupada	Clerk, D A G P & T Office	7, Koilaghat Street	ditto

No.	Names	Style or calling.	Residence or place of business.	Religion.
	Ghosal, Charu Chandra	Section-holder, Government of India Press	8, Hastings Street	Hindu
	Ghosal, Charu Pada	Clerk, C A O's Office, E I R	E I R House	ditto
	Ghosal, Dinanath	Head Clerk, Tagore Raj Estate	Tagore Castle	ditto
	Ghosal, Hari Charan	Assistant, Burn & Co, Ld	12, Mission Row	ditto
	Ghosal, Jatindranath	Assistant, Sun Life of Canada	12, Dalhousie Square, East	ditto
	Ghoshal, Jiban Chandra	Clerk, D A G P & T Office	7, Koilaghat Street	ditto
	Ghosal, Jitendra Mohan	Assistant, Martin & Co	12, Mission Row	ditto
	Ghosal, Jogendra Mohan	Clerk, R Sim & Co, Ld	2, Clive Row	ditto
	Ghosal, Kali Krishna	Assistant, Income-tax Office	3, Government Place, West	ditto
	Ghosal, Kishori Mohan	Clerk, Traffic Department, E B R	3, Kaylaghat Street	ditto
	Ghosal, Kshirode Gopal	Assistant, Mackinnon, Mackenzie & Co	16, Strand Road	ditto
	Ghosal, Madhusudan, MA	Head Clerk, Income-tax Office	1, Hare Street	ditto
	Ghosal, Nani Gopal	Clerk, C A O's Office, E I R	E I R Office	ditto
	Ghosal, N N	Assistant, Oriental Govt Security Life Assurance Co, Ld	2, Clive Row	ditto
	Ghosal, Nripendra Nath	Assistant, Andrew, Yule & Co, Ld	8, Clive Row	ditto
	Ghosal, Panchu Gopal, BSc, BT	Head Master, Sanskrit Collegiate School	College Square	ditto
	Ghosal, Phani Bhusan	Clerk, Chief Auditor's Office, E I R	E I R House	ditto
	Ghosal, Prafulla Chandra	Clerk, Calcutta Improvement Trust	5, Clive Street	ditto
	Ghosal, Shailendra Nath	Accountant and Cashier, J H Fenner & Co, Ld	Mercantile Buildings	ditto

Ghosal, Shibdas ..	Assistant, Andrew Yule & Co, Ld	8, Clive Row	ditto
Ghosal, Sudhan Krishna ..	Cashier, Government of India Press	8, Hastings Street	ditto
Ghosal, Sudhangshu Kumar, BA ..	Clerk, Lloyds Bank, Ld	101-1, Clive Street	ditto
Ghose, Abanimohan, BA ..	Assistant, Office of the Director of Industries, Bengal ..	40-1A, Free School Street ..	ditto
Ghose, Abodh Gopal ..	Assistant Book-keeper, Royal Calcutta Turf Club	11, Russel Street	ditto
Ghose, A K ..	Assistant, G E C (India), Ld	Magnet House, Chittaranjan Avenue, South.	ditto
Ghose, Amal Chandra, BA ..	Assistant, Calcutta University	Senate House	ditto
Ghose, Amarendra Nath ..	Accounts Clerk, Ex Engineer's Office, Damodar Division, PWD	Treasury Buildings	ditto
Ghose, Amarendra Nath ..	Head Assistant, Office of the Director of Public Health, Bengal	Writers' Buildings	ditto
Ghose, Amarendra Nath ..	Professor, Bangabasi College	25-1, Scott Lane	ditto
Ghose, Amarendra Nath ..	Clerk, C E S C, Ld	Victoria House	ditto
Ghose, Amar Nath, BA ..	Teacher, City School	13, Mirzapur Street	Brahmo
Ghose, Amrita Lal ..	Assistant, Central Forms Store	166, Dharamtala Street ..	Hindu
Ghose, Amrita Lal ..	Stenographer, Williamson, Magor & Co .. .	4, Mangoe Lane	ditto
Ghose, Amulya Ratan ..	Clerk, D A G P & T Office	7, Koilaghat Street	ditto
Ghose, A N ..	Clerk, Calcutta Mint	47, Strand Road	ditto
Ghose, Anadi Chandra ..	Assistant, Calcutta University	Senate House	ditto
Ghose, Anadi Nath ..	Clerk, D A G P & T Office	7, Koilaghat Street	ditto
Ghose, Ananta Nath ..	Assistant, Accountant-General's Office, Bengal	Treasury Buildings	ditto
Ghose, Anil Chandra ..	Stenographer, Mather & Platt, Ld	7, Hare Street	ditto.
Ghose, Anil Krishna ..	Ledger-keeper, Geo Henderson & Co, Ld	101-1 Clive Street	ditto

No.	Names.	Style or calling.	Residence or place of business.	Religion.
	Ghose, Anil Kumar, BA ..	Assistant, Accountant-General's Office, Bengal	Treasury Buildings	Hindu
	Ghose, Anil Kumar, BA	Store-Keeper, Stores Department, Calcutta Corporation	32-7, Beadon Street	ditto
	Ghose, Annada Prasad	Clerk, Telegraph Check Office	33, Dalhousie Square, South	ditto
	Ghose, Annada Prasad ..	Accounts Clerk, E B R	3, Koilaghat Street	ditto
	Ghose, Annada Prasad	Clerk, D A G P & T Office	7, Koilaghat Street	ditto
	Ghose, Arabinda, MA, GDA	Inspector Surveyor, Incomte-ax Office	3, Government Place, West	ditto
	Ghose, Ardhendu ..	Clerk, Traffic Department, E B R	3, Koilaghat Street	ditto
	Ghose, Ardhendushekhar, BSC	Salesman, Dodge & Seymour, Ld	Tower House, Chowringhee Square	ditto
	Ghose, Ashutos ..	Assistant, Office of the Private Secy to H E the Governor of Bengal.	Government House	ditto
	Ghose, Ashutos ..	Assistant, Indian Stores Department (Inspection)	6, Esplanade, East	ditto
	Ghose, Aswini Kumar ..	Clerk, Telegraph Check Office	33, Dlhousie Square, South	ditto
	Ghose, A T ..	Assistant, Guest, Keen, Williams, Ld	7, Council House Street	ditto
	Ghose, Badrica Nath ..	Clerk, D A G P & T Office	7, Koilaghat Street	ditto
	Ghose, Baidyanath ..	Chief Clerk, *Statesman*, Ld	Statesman House	ditto
	Ghose, Balai Chand, BSC	Professor, Bangabasi College	25-1, Scott Lane	ditto
	Ghose, Bamacharan ..	Assistant, Accountant-General's Office, Bengal	Treasury Buildings	ditto
	Ghose, Bamapada ..	Clerk, Shaw, Wallace & Co	4, Bankshall Street	ditto
	Ghose, Banamali ..	Assistant, Accounts Department, Calcutta Corporation	Municipal Office	ditto
	Ghose, Bankim Chandra	Clerk, D A G P & T Office	7, Koilaghat Street	ditto

Ghose, Basanta Kumar, BA	Assistant, Accounts Department, Calcutta Corporation	Municipal Office		ditto
Ghose, Batakrishna	Clerk, Shaw, Wallace & Co	4, Bankshall Street		ditto
Ghose, Batakrishna	Instructor, Calcutta University	Senate House		ditto
Ghose, B B	Assistant, Mackinnon, Mackenzie & Co	16, Strand Road		Christian
Ghose, B B	Clerk, Burmah-Shell Co of India, Ld	Hongkong House		Hindu
Ghose, Bhabanath	Assistant, McLeod & Co	28, Dalhousie Square		ditto
Ghose, Bhupati Bhusan	Assistant, Reserve Bank of India	8, Council House Street		ditto
Ghose, Bhupendra Lal	Clerk, Calcutta Improvement Trust	5, Clive Street		ditto
Ghose, Bhupendra Nath	2nd Clerk, Chemical Examiner's Department, Bengal	Medical College		ditto
Ghose, Bhupendra Nath	Clerk, Royal Calcutta Turf Club	11, Russel Street		ditto
Ghose, Bhupesh Chandra	Clerk, D A G P & T Office	7, Koilaghat Street		ditto
Ghose, Bibhuti Bhusan	Head Clerk, Stores Department, E B R	3, Koilaghat Street		ditto
Ghose, Bijaya Chandra	Archæological Overseer	Indian Museum		ditto
Ghose, Bijaya Krishna	Head Clerk, Fire Department, Jardine, Skinner & Co	4, Clive Row		ditto
Ghose, Binaya Krishna	Clerk, C E's Office, E I R	E I R House		ditto
Ghose, Binode Bihari	Clerk, Place, Siddons & Gough	6, Lyons Range		ditto
Ghose, Binode Bihari	Assistant, Bengal Chemical and Pharmaceutical Works, Ld	31, Chittaranjan Avenue, South		ditto
Ghose, Binode Bihari	Clerk, C C M's Office, E I R	E I R House		ditto
Ghose, Birendra Nath	Head Clerk, Calcutta Corporation, Dist I	79, Cornwallis Street		ditto
Ghose, Birendra Nath	Clerk, Calcutta University	Senate House		ditto
Ghose, B K, BA	Cashier, Britannia Biscuit Co, Ld	Stephen House		ditto
Ghose, B K	Clerk, Remington Rand Inc	3, Council House Street		ditto

No.	Names.	Style or calling.	Residence or place of business.	Religion.
	Ghose, B N	Assistant Bullion-keeper, Calcutta Mint	47, Strand Road	Hindu
	Ghose, Chandi Charan	Assistant, Royal Insurance Co, Ld	26 &27, Dalhousie Square	ditto
	Ghose, Chandi Charan	Assistant, Bird & Co	1-1, Clive Street	ditto
	Ghose, Chitta Ranjan	Clerk D A G P & T Office	7, Koilaghat Street	ditto
	Ghose, D B	Clerk, Accounts Office, Calcutta Mint	47, Strand Road	ditto
	Ghose, D C	Assistant, Steuart & Co, Ld	57, Park Street	ditto
	Ghose, Debendra Nath	Education Assistant, Presidency Commissioner's Office	3, Charnock Place	ditto
	Ghose, Debendra Nath	Assistant, Accountant-General's Office, Bengal	Treasury Buildings	ditto
	Ghose, Dhirendra Nath	Clerk, Shaw, Wallace & Co	4, Bankshall Street	ditto
	Ghose, Dhirendra Nath	Head Clerk, Chemical Examiner's Department, Bengal	Medical College	ditto
	Ghose, Dhirendra Nath (III)	Clerk, Telegraph Check Office	33, Dalhousie Square, South	ditto
	Ghose, Dibakar, BSc	Clerk, Assessor's Department, Calcutta Corporation	Municipal Office	ditto
	Ghose, D N	Deputy Accountant, Calcutta Mint	47, Strand Road	ditto
	Ghose, D N	Assistant Bullion-keeper, Calcutta Mint	47, Strand Road	ditto
	Ghose, D N	Clerk, Remington Rand, Inc	3, Council House Street	ditto
	Ghose, Durgadas, BA	Assistant, Accountant-General's Office, Bengal	Treasury Buildings	ditto
	Ghose, Dwijendra Nath	Clerk, Collection, Port Commissioners' Office	Strand Road	ditto
	Ghose, Dwipendra Nath, MSc	Assistant, Accountant-General's Office, Bengal	Treasury Buildings	ditto
	Ghose, G	Assistant, Jessop & Co, Ld	93, Clive Street	ditto
	Ghose, Gadadhar	Assistant, Income-tax Office	1, Hare Street	ditto
	Ghose, Gadadhar Chandra	Clerk, Imperial Bank of India	3, Strand Road	ditto

Ghose, Gangadhar	Assistant, Accountant-General's Office, Bengal	Treasury Buildings	ditto
Ghose, Girindra Nath	Assistant, Halley Bros, Ld	7, Canning Street	ditto
Ghose, Gopal Krishna	Assistant, Commercial Intelligence Department, India	1, Council House Street	ditto
Ghose, G K	Sr Accountant, Accountant-General's Office, Bengal	Treasury Buildings	ditto
Ghose, Gostha Bihari	Head Clerk , General Department, Birla Brothers, Ld	8, Royal Exchange Place	ditto
Ghose, Haran Chandra	Stenographer, Indian School Supply Depôt	Chittaranjan Avenue, South	ditto
Ghose, Harendra Krishna	Stenographer, W T Henley & Telegraph Works Co, Ld	Old Court House Corner	ditto
Ghose, Harendra Nath, BA	Accounts, Clerk, E B R	3, Koilaghat Street	ditto
Ghose, Hari Charan, MA	Professor, Bangabasi College	25-1, Scott Lane	ditto
Ghose, Hari Charan	Clerk, Martin & Co	12, Mission Row	ditto
Ghose, Haridas	Clerk, D A G P & T Office	7, Koilaghat Street	ditto
Ghose, Haridas	Assistant, Bengal Secretariat, Poll (Special) Deptt	Writers' Buildings	ditto
Ghose, Haridas	Assistant, Central Forms Store	166, Dharamtala Street	ditto
Ghose, Haridhan	Clerk, Alliance Assurance Co, Ld	2, Hare Street	ditto
Ghose, Haripada	Assistant, Accountant-General's Office, Bengal	Treasury Buildings	ditto
Ghose, Haripada	Assistant, Office of the Director of Industries, Bengal	40-1A, Free School Street	ditto
Ghose, Haripada, BA	Assistant, Commercial Intelligence Department India	1, Council House Street	ditto
Ghose, Harish Chandra, BA	Assistant, Office of the Director of Industries, Bengal	40-1A, Free School Street	ditto

No	Name.	Style or calling.	Residence or place of business.	Religion.
	Ghose, Hem Chandra, BA	Assistant, Accountant-General's Office, Bengal	Treasury Buildings	Hindu
	Ghose, Hiralal	Assistant, Bengal Secretariat, Revenue Department	Writers' Buildings	ditto
	Ghose, Hiran Kumar	Assistant, Accountant-General's Office, Bengal	Treasury Buildings	ditto
	Ghose, Hrisikesh	Clerk, Ralli Brothers, Ld	16, Hare Street	ditto
	Ghose, Indra Narayan	Assistant, Office of the Controller of Currency	Treasury Buildings	ditto
	Ghose, Jadu Gopal, BSc, BL	Sub-Head, Statistical Office, E I R	E I R House	ditto
	Ghose, Jagat Chandra	Assistant, Macneill & Co	2, Fairlie Place	ditto
	Ghose, Jamini Mohan, BL	Clerk, Calcutta Improvement Trust	5, Clive Street	ditto
	Ghose, Jatindra Lal	Assistant, Surgeon-General's Office, Bengal	Writers' Buildings	ditto
	Ghose, Jatindra Mohan	Assistant, Accountant-General's Office, Bengal	Treasury Buildings	ditto
	Ghose, Jatindra Mohan, MA	Professor, Vidyasagar College	39, Shankar Ghose Lane	ditto
	Ghose, Jatindra Nath	Chief Clerk, Union Insurance Society of Canton, Ld	8, Clive Street	ditto
	Ghose, Jatindra Nath	Assistant, Bengal Secretariat, Political Department	Writers' Buildings	ditto
	Ghose, Jatindra Nath	Assistant, Macneill & Co	2, Fairlie Place	ditto
	Ghose, Jatindra Prasad	Assistant, Accountant-General's Office, Bengal	Treasury Buildings	ditto
	Ghose, Jitendra Nath, BL	Assessor, Income Tax Office	3, Government Place, West	ditto
	Ghose, Jitendra N	Assistant, Grahams Trading Co (India), Ld	6, Lyons Range	ditto

Ghose, Jitendra Nath	Assistant, Bengal Secretariat, Revenue Department	Writers' Buildings	ditto
Ghose, Jitendra Nath	Clerk, C M E's Office, E I R	E I R House	ditto
Ghose, Jnanendra Chandra	Head Assistant, Civil Veterinary Department	Writers' Buildings	ditto
Ghose, Jnanendra Nath	Head Assistant, Office of the I-G of Police	Writers' Buildings	ditto
Ghose, Jnanendra Nath	Head Clerk, Mills Department, Jardine, Skinner & Co	4, Clive Row	ditto
Ghose, Jogesh Chandra	Clerk, Shaw, Wallace & Co	4, Bankshall Street	ditto
Ghose, Jogesh Chandra	Clerk, E B R, Traffic Department	3, Koilaghat Street	ditto
Ghose, Jyotish Chandra BA, GDA	Examiner of Accounts, Income-tax Office	6, Esplanade, East	ditto
Ghose, Jyotish Chandra	Assistant, Accountant-General's Office Bengal	Treasury Buildings	ditto
Ghose, Jyotish Chandra	Clerk, Telegraph Check Office	33, Dalhousie Square, South	ditto
Ghose, Jyotish Chandra	Clerk Royal Insurance, Co Ld	26 & 27, Dalhousie Square	ditto
Ghose, Kalidas	Assistant, Accountant-General's Office, Bengal	Treasury Buildings	ditto
Ghose, Kali Kinkar	Assistant, Accountant-General's Office, Bengal	Treasury Buildings	ditto
Ghose, Kali Pada	Clerk, Martin & Co	12, Mission Row	ditto
Ghose, Kalipada	Broker, David Sassoon & Co, Ld	4, Lyons Range	ditto
Ghose, Kanai Lal	Head Assistant, Sec II, Accounts Department, Calcutta Corporation	Municipal Office	ditto
Ghose, Kanai Lal	Assistant, Accountant-General's Office, Bengal	Treasury Buildings	ditto
Ghose, Kangali Charan	Clerk, Book Section, Port Commissioners' Office	Strand Road	ditto
Ghose, Kanti Chandra	Senior Reporter, Bengal Legislative Council	Council House	ditto
Ghose, Khagendra Nath, BA	Assessing Inspector, Calcutta Corporation	Municipal Office	ditto
Ghose, Khagendra Nath	Head Ref Clerk, Bengal Secretariat, Finance Department	Writers' Buildings	ditto
Ghose, Kiran Chandra	Journalist, *Statesman*, Ld	Statesman House	ditto

No.	Names.	Style or calling.	Residence or place of business.	Religion.
	Ghose, Kiran Chandra ..	.. Assistant, Mackinnon, Mackenzie & Co	16, Strand Road	Hindu.
	Ghose, Krishna Dhan ..	.. Clerk, C O S Office, E I R	E I R House	ditto
	Ghose, Krishna Dhan, BL	.. Clerk, D A G P & T Office	7, Koilaghat Street	ditto
	Ghose, Krishna Pada, MSC	.. Demonstrator, Scottish Church College	4, Cornwallis Square	ditto
	Ghose, Kshitish Chandra..	.. Clerk, Alliance Assurance Co, Ld	2, Hare Street	ditto
	Ghose, Kumar Krishna ..	.. Assistant, Royal Calcutta Turf Club	11, Russell Street	ditto
	Ghose, Kumud Bandhu, BL	.. Clerk, D A G P & T Office	7, Koilaghat Street	ditto
	Ghose, Kumud Nath ..	.. Assistant, Bird & Co	1-1, Clive Street	ditto
	Ghose, Kunja Bihari, BA..	.. Assistant, Accountant-General's Office, Bengal	Treasury Buildings	ditto
	Ghose, Lal Bihari ..	.. Accounts Clerk, E B R	3, Koilaghat Street	ditto
	Ghose, Lalit Kumar	.. Clerk, Pre-Audit, Port Commissioners' Office	Strand Road	ditto
	Ghose, L M ..	.. Cashier, Oriental Govt Security Life Assurance Co, Ld ..	2, Clive Row	ditto
	Ghose, Madhabi Kanta, BSC	.. Assistant, Agriculture and Industries Department, Bengal ..	Writers' Buildings	ditto
	Ghose, Madhusudan ..	.. Assistant, Office of the Inspector-General of Registration, Bengal	Writers' Buildings	ditto
	Ghose, Makhan Lal ..	.. Assistant, Accounts Deptt, Calcutta Corporation	Municipal Office	ditto
	Ghose, Makhan Lal ..	.. Clerk, Royal Insurance Co, Ld	26 & 27, Dalhousie Square ..	ditto
	Ghose, Manarajan, BA ..	.. Assistant, Bengal Secretariat, P W D	Writers' Buildings	ditto
	Ghose, Manibhusan ..	.. Clerk, Imperial Bank of India	3, Strand Road	ditto
	Ghose, Manick Lal ..	.. Clerk, Imperial Bank of India	3, Strand Road	ditto
	Ghose, Manindra Nath ..	.. Clerk, Office of Superintending Engineer, Presidency Circle ..	Writers' Buildings	ditto
	Ghose, Manindra Nath ..	.. Clerk, D A G P & T Office	7, Koilaghat Street	ditto
	Ghose, Manmatha Nath ..	.. Clerk, Book Section, Port Commissioners' Office	Strand Road	ditto

Ghose, Manmatha Nath	Assistant, Government of India Press	8, Hastings Street		ditto
Ghose, Manmohan	Assistant, Agriculture and Industries Department, Bengal	Writers' Buildings		ditto
Ghose, Manmohan, BA	Assistant Headmaster, Maharaja Cossimbazar, Polytechnic Institute.	1 & 3, Nandalal Bose Lane		ditto
Ghose, Mati Lal	Clerk, Burmah Shell Co of India, Ld	Hongkong House		ditto
Ghose, M N	Assistant, Bengal Secretariat Record Room	Writers' Buildings		Christian
Ghose, Mohini Mohan	Assistant, Office of the Inspector-General of Registration, Bengal	Writers' Buildings		Hindu
Ghose, N	Head Clerk, Sutton & Sons, Ld	35, Park Mansions		ditto
Ghose, Nagendra Kumar	Sub-Head, Accounts Department, E B R	3, Koilaghat Street		ditto
Ghose, Nagendra Nath, MA (II)	Clerk, D A G P & T Office	7, Koilaghat Street		ditto
Ghose, Nagendra Nath, BSc (III)	Clerk, D A G P & T Office	7, Koilaghat Street		ditto
Ghose, Nalin Bihari	Clerk, Grindlay & Co, Ld	6, Church Lane		ditto
Ghose, Nalini Kanta	Assistant, Ludlow Jute Co, Ld	7, Royal Exchange Place		ditto
Ghose, Nalini Kanta	Clerk, Telegraph Check Office	33, Dalhousie Square, South		ditto
Ghose, Nalini Mohan	Head Clerk and Accountant, The Bengal Waterproof Works, Ld	12, Chowringhee		ditto
Ghose, Nalini Nath	Jr Reporter, Bengal Legislative Council	Council House		ditto
Ghose, Nalini Nath	Surveyor, Calcutta Improvement Trust	5, Clive Street		ditto
Ghose, Nalini Ranjan	Clerk, Martin & Co	12, Mission Row		ditto
Ghose, Nanda Lal, MSc	Lecturer, Ripon College	24, Harrison Road		ditto
Ghose, Nanda Lal	Clerk, D A G P & T Office	7, Koilaghat Street		ditto
Ghose, Nani Gopal, MA	Assessing Inspector, Calcutta Corporation	Municipal Office		ditto
Ghose, Nani Gopal, BA	Assistant, Bengal Secretariat, Finance Department	Writers' Buildings		ditto
Ghose, Narayan Chandra	Accountant, Oriental Trading Co	84-A, Clive Street		ditto

No.	Names.	Style or calling.	Residence or place of business.	Religion.
	Ghose, Narendra Krishna	Ledger-keeper, Bombay Co, Ld	19, British Indian Street	Hindu
	Ghose, Narendra Krishna	Chief Clerk, Office of the Geological Survey of India	27, Chowringhee	ditto
	Ghose, Narendra Nath, BA	Assistant, Commercial Intelligence Department, India	1, Council House Street	ditto
	Ghose, Narendra Nath	Assistant, Mackinnon, Mackenzie & Co	16, Strand Road	ditto
	Ghose, Nibaran Chandra	Surveyor and Valuer, Land Acquisition Office	5, Bankshall Street	ditto
	Ghose, Nihar Ranjan, BA	Divisional Accountant, Accountant-General's Office, Bengal	Treasury Buildings	ditto
	Ghose, Niranjan	Head Assistant, Income-tax Office	Imperial Secretariat Buildings	ditto
	Ghose, Nirendra Prasad	Stenographer, Office of the Director of Public Instruction, Bengal	Writers' Buildings	ditto
	Ghose, Nirmal Chandra	Assistant, Commercial Intelligence Department, India	1, Council House Street	ditto
	Ghose, Nirmal Chandra, BSc	Assistant, Botanical Survey of India	Indian Museum	ditto
	Ghose, Nirmal K	Assistant, Roberts McLean & Co, Ld	101, Clive Street	ditto
	Ghose, Nirmal Ratan	Clerk, Agent's Office, E I R	E I R House	ditto
	Ghose, Nirode Chandra	Clerk, D A G P & T Office	7, Koilaghat Street	ditto
	Ghose, Nirode Gopal	Clerk, Royal Calcutta Turf Club	11, Russel Street	ditto
	Ghose, Nitai Charan	Clerk, D A G P & T Office	7, Koilaghat Street	ditto
	Ghose, Nitai Charan	Assistant, F W Heilgers & Co	1-1, Clive Street	ditto
	Ghose, N R	Audit Inspector, Port Commissioners' Office	Strand Road	ditto
	Ghose, Panchanan, BL	Assistant, Accounts Department, Calcutta Corporation	Municipal Office	ditto
	Ghose, Panchanan	Clerk, Imperial Bank of India	3, Strand Road	ditto
	Ghose, Panchanan, BA	Teacher, New Indian School	5-A, Kasi Bose Lane	ditto

Ghose, Panchnanan, BA	Clerk, D A G P & T Office	7, Koilaghat Street	ditto
Ghose, Panchu Gopal	Store-keeper, Balmer Lawrie & Co, Ld	103, Clive Street	ditto
Ghose, Pannalal, BSc	Assistant, Accountant-General's Office, Bengal	Treasury Buildings	ditto
Ghose, Paresh Nath	Assistant, Bengal Secretariat, Accounts Department	Writers' Buildings	ditto
Ghose, P C	Accountant, Government Shipping Office	15-1, Strand Road	ditto
Ghose, Phakir Chandra, MA	Assistant, Commercial Intelligence Deptt, India	1, Council House Street	ditto
Ghose, Phanindra Nath	Clerk, Central Forms Store	166, Dharamtala Street	ditto
Ghose, Phani Bhusan	Clerk, Kilburn & Co	4, Fairlie Place	ditto
Ghose, Phanindra Nath	Clerk, C E S C, Ld	Victoria House	ditto
Ghose, Phelaram	Assistant, Reserve Bank of India	8, Council House Street	ditto
Ghose, P M	Assistant, The Apcar Collieries, Ld	2, Fairlie Place	ditto
Ghose, P N, MA	Lecturer, Islamia College	8, Wellesley Street	ditto
Ghose, Prabodh Chandra	Assistant, Commercial Intelligence Department, India	1, Council House Street	ditto
Ghose, Prabodh Chandra	Assistant, Indian Stores Department (Inspection)	6, Esplanade, East	ditto
Ghose, Prafulla Kumar, BA	Assistant, Board of Revenue, Bengal	Writers' Buildings	ditto
Ghose, Pramatha Bhusan	Assistant, Bengal Secretariat, Irrigation Department	Writers' Buildings	ditto
Ghose, Prasad Kumar	Sub-Head, Accounts Office, E B R	3, Koilaghat Street	ditto
Ghose, Pravas Chandra	Assistant, Office of the Director of Industries, Bengal	40-1A, Free School Street	ditto
Ghose, Pravas Chandra	Engineer, F & C Osler, Ld	12, Old Court House Street	ditto
Ghose, Pravas Chandra, MA	Lecturer, Vidyasagar College	39, Shankar Ghose Lane	ditto

No.	Names.	Style or calling.	Residence or place of business.	Religion.
	Ghose, Purna Chandra ..	Artist, *Statesman*, Ld	.. Statesman House ..	.. Hindu
	Ghose, Rabindra Nath ..	.. Clerk, Imperial Bank of India	.. 3, Strand Road ..	.. ditto
	Ghose, Radha Binode ..	.. Clerk, Shaw, Wallace & Co	.. 4, Bankshall Street ..	.. ditto
	Ghose, Radhika Mohan ..	.. Head Assistant, Income-tax Office	.. 6, Esplanade, East ..	.. ditto
	Ghose, Raicharan, BA, BT	.. Assistant Master, Hare School	.. 87, College Street ..	.. ditto
	Ghose, Rajendra Nath ..	.. Assistant, Commercial Intelligence Department, India	.. 1, Council House Street ..	.. ditto
	Ghose, Raj Krishna ..	.. Head Mechanic, Govt of India Press ..	.. 8, Hastings Street ..	.. ditto
	Ghose, Rakhal Chandra	.. Senior Clerk, Office of the Controller of Purchase, Indian Stores Department	6, Esplanade, East ..	.. ditto
	Ghose, Ramesh Chandra ..	.. R D Inspector, E B R	.. 3, Kaylaghat Street ..	.. ditto
	Ghose, Ramgopal ..	.. Clerk, D A G P & T Office	.. 7, Koilaghat Street ..	.. ditto
	Ghose, Ramjitendra ..	.. Stenographer, Indian Stores Department (Inspection)	.. 6, Esplanade, East ..	.. ditto
	Ghose, Ram Saran ..	.. Clerk, D A G P & T Office	.. 7, Koilaghat Street ..	.. ditto
	Ghose, S ..	.. Audit-Inspector, Port Commissioners' office ..	.. Strand Road ..	.. ditto
	Ghose, Sadhan Chandra	.. Clerk, D A G P & T Office	.. 7, Koilaghat Street ..	.. ditto
	Ghose, Sajani Mohan ..	.. Assistant, Accounts Department, Calcutta Corporation	.. Municipal Office ..	.. ditto
	Ghose, Samul Kristo ..	.. Assistant, Bird & Co	.. 1-1, Clive Street ..	.. ditto
	Ghose, Santos Kumar ..	.. Ledger-keeper, Geo Henderson & Co, Ld ..	.. 101-1, Clive Street ..	.. ditto
	Ghose, Santos Kumar, BSc	.. Assistant, Accountant-General's Office, Bengal ..	.. Treasury Buildings ..	.. ditto
	Ghose, Santos Kumar ..	.. Assistant, Macneill & Co	.. 2, Fairlie Place ..	.. ditto

Ghose, Sashanka Shekhar	Assistant, Calcutta University	Senate House	ditto
Ghose, Satish Chandra	Clerk, Licensed Measurers Department	2, Clive Street	ditto
Ghose, Satish Chandra, BL	Assistant, Bengal Secretariat, Finance Department	Writers' Buildings	ditto
Ghose, Satish Chandra	Clerk, I G N & Ry Co, Ld	4, Fairlie Place	ditto
Ghose, Satish Chandra	Chief Clerk & Cashier, Mather & Platt, Ld	7, Hare Street	ditto
Ghose, Satish Chandra	Clerk, C O P S Office, E I R	E I R House	ditto
Ghose, Satish Chandra	Assistant, Martin & Co	12, Mission Row	ditto
Ghose, Satyasharan	Assistant, Accountant-General's Office, Bengal	Treasury Buildings	ditto
Ghose, Shachindra Krishna	Salesman, The Eastern Merchants	14, Old Court House Lane	ditto
Ghose, Shailendra Kumar	Head Clerk, Imperial Bank of India	3, Strand Road	ditto
Ghose, Sharat Chandra	Clerk, C A O's Office, E I R	E I R House	ditto
Ghose, Sharat Chandra	Clerk, C O P S Office, E I R	E I R House	ditto
Ghose, Sharat Chandra	Clerk, D A G P & T Office	7, Koilaghat Street	ditto
Ghose, Sharat Chandra	Assistant, Income-tax Office	1, Hare Street	ditto
Ghose, Shibkinkar, MSc	Assistant, Reserve Bank of India	8, Council House Street	ditto
Ghose, Shishir Kumar, B COM	Assistant, Accountant-General's Office, Bengal	Treasury Buildings	ditto
Ghose, Shital Das	Assistant, Accountant-General's Office, Bengal	Treasury Buildings	ditto
Ghose, Shital Prasad	Assistant, Bird & Co	1-1, Clive Street	ditto

No.	Names.	Style or calling.	Residence or place of business.	Religion.
	Ghose, Shiva Das	Assistant, Royal Insurance Co, Ld	26 & 27, Dalhousie Square	Hindu
	Ghose, Shivaprasanna	Assistant, Accountant-General's Office, Bengal	Treasury Buildings	ditto
	Ghose, Shovamaya, MA	Professor, Vidyasagar College	39, Sankar Ghose Lane	ditto
	Ghose, Shrish Krishna	Clerk, Place, Siddons & Gough	6, Lyons Range	ditto
	Ghose, Shyam Kinkar	Clerk, I G N & Ry Co, Ld	4, Fairlie Place	ditto
	Ghose, Shyamapada	Clerk, Imperial Bank of India	3, Strand Road	ditto
	Ghose, S K	Assistant, Hoare Miller & Co	5, Fairlie Place	ditto
	Ghose, S N	Assistant Inspector of Factories, Bengal	40-1A, Free School Street	ditto
	Ghose, S N	Head Clerk, G E C (India), Ld	Magnet House, Chittaranjan Avenue, South	ditto
	Ghose, Subodh Kumar	Clerk, Imperial Bank of India	3, Strand Road	ditto
	Ghose, Subodh Kumar	Assistant, Accounts Department, Calcutta Corporation	Municipal Office	ditto
	Ghose, Sudarshan	Clerk, Telegraph Check Office	33, Dalhousie Square, South	ditto
	Ghose, Sudeb Chandra, BA	Assistant, Brooke Bond (India), Ld	2, Metcalfe Street	ditto
	Ghose, Sudhindra Nath, BSc	Accountant, Metro-Goldwyn-Mayer, India, Ld	5, Chowringhee Road	ditto
	Ghose, Sudhir Chandra, BA	Clerk, D A G P & T Office	7, Koilaghat Street	ditto
	Ghose, Sudhir Chandra, BSc	Laboratory Assistant, Imperial Chemical Industries (India), Ld.	18, Strand Road	ditto
	Ghose, Sudhir Chandra	Head Assistant, Emigration Office	8, Dalhousie Square, East	ditto
	Ghose, Sudhir Kumar	Estimator, Executive Engineer's Office, Hijli Division, P W D	Writers' Buildings	ditto

Ghose, Sudhir Kumar	Clerk, Shaw, Wallace & Co	4, Bankshall Street	ditto
Ghose, Suhrid Krishna, MA	Teacher, Bangabasi College School	19, Scott Lane	ditto
Ghose, Suprasanna	Assistant, National Insurance Co, Ld	7, Council House Street	ditto
Ghose, Supravash	Clerk, Imperial Bank of India	3, Strand Road	ditto
Ghose, Suranjan, BA	Head Clerk, Income-Tax Office	3, Government Place, West	ditto
Ghose, Surendra Kumar	Assistant, Accounts Department, Calcutta Corporation	Municipal Office	ditto
Ghose, Surendra Nath, BA	Clerk, D A G P & T Office	7, Koilaghat Street	ditto
Ghose, Surendra Nath	Clerk, Telegraph Check Office	33, Dalhousie Square, South	ditto
Ghose, Surendra Nath (No. I)	Sub-Head, Accounts Office, E I R	E I R House	ditto
Ghose, Surendra Nath (No. II)	Clerk, C A O's Office, E I R	E I R House	ditto
Ghose, Surendra Nath, MA	Assistant, Calcutta University	Senate House	ditto
Ghose, Surendra Nath	Assistant, Office of the Director of Industries. Bengal	40-1A, Free School Street	ditto
Ghose, Suresh Ch	Clerk, Booking Section, Port Commissioners' Office	Strand Road	ditto
Ghose, Suresh Chandra, BSc, BL	Demonstrator, Scottish Church College	4, Cornwallis Square	ditto
Ghose, Suresh Chandra	Head Book-keeper, Royal Calcutta Turf Club	11, Russell Street	ditto
Ghose, Sushil Chandra	Costing Clerk, Lipton, Ld	9, Weston Street	ditto
Ghose, Tapesh Chandra	Clerk, Burmah Shell Co of India, Ld	Hongkong House	ditto
Ghose, Tarakinkar	Stenographer & Junior Council Reporter	Writers' Buildings	ditto
Ghose, Tarapada	Assistant, Bengal Secretariat, P W D	Writers' Buildings	ditto
Ghose, Trijan Mohan, BA	Assistant, Accountant-General's Office, Bengal	Treasury Buildings	ditto
Ghose, Tulsi Charan	Book-keeper, Harrisons & Crosfield, Ld	6, Church Lane	ditto
Ghose, Tulsi Charan	Clerk. D A G P & T Office	7, Koilaghat Street	ditto

No.	Names.	Style or calling.	Residence or place of business.	Religion.
	Ghose, Tulsi Narayan	Assistant, Accountant-General's Office, Bengal	Treasury Buildings	Hindu
	Ghose, Uma Shankar, BA (Hons)	Clerk, D A G P & T Office	7, Koilaghat Street	ditto
	Ghose, Umesh Chandra	Building Inspector, Calcutta Corporation	Municipal Office	ditto
	Ghose, Upendra Nath	Assistant, Commercial Intelligence Department, India	1, Council House Street	ditto
	Ghose, Upendra Nath	Accountant, Longmans Green & Co, Ld	6, Old Court House Street	ditto
	Ghose, Upendra Nath	Assistant, Andrew Yule & Co, Ld	8, Clive Row	ditto
	Ghose, Usa Nath	Estimator, P H D, Bengal	3, Charnock Place	ditto
	Goel, Kailash Narain	Head Clerk, G E's Office, Calcutta Division, Fort William	Fort William	ditto
	Gopalan, A	Assistant, Andrew Yule & Co, Ld	8, Clive Street	ditto
	Gopinath, Kodangi S	Clerk, Burmah Shell Co of India, Ld	Hongkong House	ditto
	Gora, M C	Assistant, Shaw, Wallace & Co	4, Bankshall Street	Zoroastrian
	Goswami, B D	Clerk, Accounts Office, Calcutta Mint	47, Strand Road	Hindu
	Goswami, Bijay Kali, MSc	Lecturer, Vidyasagar College	39, Shankar Ghose Lane	ditto
	Goswami, Dibakar	Clerk, Prudential Assurance Co, Ld	Clive Buildings	ditto
	Goswami, Gouri Shankar, BA	Superintendent, Tagore Raj Estate	Tagore Castle	ditto
	Goswami, Hira Lal	Assistant, Central Forms Store	166, Dharamtala Street	ditto
	Goswami, Kumudananda	Overseer, District No. II, Calcutta Corporation	22, Mirzapore Street	ditto
	Goswami, Narayan Krishna	Head Assistant, B R Section, Port Commissioners' Office	Strand Road	ditto
	Goswami, Nerod Behari	Clerk, Martin & Co	12, Mission Row	ditto
	Goswami, Prabodh Chandra	Clerk, Place, Siddons & Gough	6, Lyons Range	ditto
	Goswami, Pulin Bihari	Head Clerk, Collection Department, Calcutta Corporation	Municipal Office	ditto

Goswami, Purnananda, BA	Assistant, Bengal Secretariat, Finance Department	Writers' Buildings	ditto
Goswami, Radha Kissen	Assistant, Birla Brothers, Ld	8, Royal Exchange Place	ditto
Goswami, Radha Krishna	Assistant, Pearl Assurance Co, Ld	8, Clive Street	ditto
Goswami, Sanat Kumar, BA	Clerk, D A G P & T Office	7, Koilaghat Street	ditto
Goswami, Santos Kumar	Assistant, Accountant-General's Office, Bengal	Treasury Buildings	ditto
Goswami, Satchidananda	Clerk, Royal Insurance Co, Ld	26 & 27, Dalhousie Square	ditto
Goswami, Shachijiban, BSc	Assistant, Accountant-General's Office, Bengal	Treasury Buildings	ditto
Goswami, Subodh Ranjan	Superintendent, Home Savings, Central Bank of I dia, Ld	100, Clive Street	ditto
Goswami, Surendra Nath	Clerk, C A O's Office, E I R	E I R House	ditto
Govindraj, Narayan	Artist, *Statesman*, Ld	Statesman House	ditto
Guha, Akshaya Kumar	Assistant, Office of the I-G of Police	Writers' Buildings	ditto
Guha, Anathbandhu	Head Assistant, Income-tax Office	6, Esplanade, East	ditto
Guha, Dhirendra Nath, BA	Assistant, Calcutta University	Senate House	ditto
Guha, G K	Assistant, Office of the Inspector-General of Prisons, Bengal	Writers' Buildings	ditto
Guha, Hari Charan	Assistant, McLeod & Co	28, Dalhousie Square	ditto
Guha, Kali Mohan, BA	Assessing Inspector, Calcutta Corporation	Municipal Office	ditto
Guha, Kali Prasanna	Assistant, Income-tax Office	6, Esplanade, East	ditto
Guha, Nagendra Nath	Clerk, C O P S Office, E I R	E I R House	ditto
Guha, Prafulla Kumar	Stenographer and Senior Council Reporter	Writers' Buildings	ditto
Guha, Pramoderanjan	Assistant, Worthington Simpson, Ld	10, Clive Street	ditto
Guha, Shailendra Nath	Clerk, Burmah Shell Co of India, Ld	Hongkong House	ditto
Guha, S N, BSc, GDA	Inspector Surveyor, Income-Tax Office	3, Government Place, West	ditto

No.	Names.	Style or calling.	Residence or place of business.	Religion.
	Guha, Sushil Chandra, MSC	Clerk, D A G P & T Office	7, Koilaghat Street	Hindu
	Guha, Upendra Chandra, BA	Clerk, Assessor's Department, Calcutta Corporation	Municipal Office	ditto
	Guha, Upendra Nath	Head Clerk, Deva Dutt Saraogi & Son	63, Ezra Street	ditto
	Guha Ray, Hemendra Nath	Stock Verifier, Accounts Department, Calcutta Corporation	Municipal Office	ditto
	Guin, Debendra Nath	Assistant, Bengal Secretariat, P W D	Writers' Buildings	ditto
	Gupta, Ajoy Kumar	Stenographer, Explosives Office	1, Council House Street	ditto
	Gupta, Akshaya Kumar	Examiner of Accounts, Income-tax Office	3, Government Place, West	ditto
	Gupta, Amiya Kumar	Clerk, Prudential Assurance Co, Ld	Clive Buildings	ditto
	Gupta, Amiya Kumar	Superintendent, Elec & Mech, G E's Office	Fort William	ditto
	Gupta, Annada Prasad	Assistant, Accountant-General's Office, Bengal	Treasury Buildings	ditto
	Gupta, Ashutos	Clerk, D A G P & T Office	7, Koilaghat Street	ditto
	Gupta, Atul Chandra	Head Assistant, Sec III, Accounts Department, Calcutta Corporation.	Municipal Office	ditto
	Gupta, Bata Krishna	Stenographer, Bengal Telephone Corporation, Ld	8, Hare Street	ditto
	Gupta, Bihari Lal	Clerk, Turner, Morrison & Co, Ld	6, Lyons Range	ditto
	Gupta, Bijaya Krishna	Clerk, D A G P & T Office	7, Koilaghat Street	ditto
	Gupta, Bijaya Prasanna	Assistant, Bird & Co	1-1, Clive Street	ditto
	Gupta, Bireshwar	Assistant, Office of the Director of Public Instruction, Bengal	Writers' Buildings	ditto
	Gupta, Dasarathi, BSC	Assistant, Geological Survey of India	27, Chowringhee	ditto
	Gupta, Dasarathi	Clerk, Bengal Chamber of Commerce	2, Clive Street	ditto
	Gupta, Debendra Nath	Assistant, Factory Inspection Department, Bengal	40-1A, Free School Street	ditto
	Gupta, Dhirendra Nath	Assistant, Bengal Secretariat, Political Department	Writers' Buildings	ditto

Gupta, D N	Assistant, Burn & Co, Ld	12, Mission Row	ditto
Gupta, Ganesh Chandra	Assistant, P & O Banking Corporation, Ld	1, Fairlie Place	ditto
Gupta, Gopal Chandra	Assistant, Office of the Controller of Currency	Treasury Buildings	ditto
Gupta, Gopal Chandra	Clerk, Agent's Office, E I R	E I R House	ditto
Gupta, Hari Charan	Assistant, Brooke Bond (India), Ld	2, Metcalfe Street	ditto
Gupta, Haridas	Clerk, Jardine, Skinner & Co	4, Clive Row	ditto
Gupta, Hazarilal	General Assistant, The Bharat Insurance Co, Ld	Chittaranjan Avenue	ditto
Gupta, Hemanta K	Assistant, Grahams Trading Co (India), Ld	6, Lyons Range	ditto
Gupta, Himangshu Kumar	Assistant, Commercial Intelligence Department, India	1, Council House Street	ditto
Gupta, Hirendra Nath	Assistant, Lionel Edwards, Ld	D-1, Clive Buildings	ditto
Gupta, Jadu Nath	Assistant, Calcutta Improvement Trust	5, Clive Street	ditto
Gupta, Jagannath	Sole Proprietor, Jagannath Gupta & Co	7-B, Clive Row	ditto
Gupta, Jatindra Nath	Head Draftsman, Engineer's Office, E B R	3, Kaylaghat Street	ditto
Gupta, Jiban Krishna	Clerk, C O P S Office, E I R	E I R House	ditto
Gupta, Jyotish Chandra	Record-keeper, Engineer's Office, E B R	3, Kaylaghat Street	ditto
Gupta, Kalidas	Clerk, National City Bank of New York	4, Clive Street	ditto
Gupta, Lakshan Chandra	Clerk, Chartered Bank of India, Australia & China	1-1, Clive Street	ditto
Gupta, Mrityunjoy	Accounts Clerk, E D Sassoon & Co, Ld	101, Clive Street	ditto
Gupta, Nagendra Nath	Assistant, Mackinnon, Mackenzie & Co	16, Strand Road	ditto
Gupta, Nagendra Nath	Assistant Reporter, Secretary's Department, Calcutta Corporation	Municipal Office	ditto

No.	Names.	Style or calling.	Residence or place of business.	Religion.
	Gupta, Nandalal	Assistant, Excise Commissioner's Office, Bengal	Writers' Buildings	Hindu
	Gupta, Narendra Nath	Clerk, D A G P & T Office	7, Koilaghat Street	ditto
	Gupta, Niranjan	Clerk, Calcutta Improvement Trust	5, Clive Street	ditto
	Gupta, Nripendra Nath	Clerk, Harrisons & Crosfield, Ld	6, Church Lane	ditto
	Gupta, Paresh Chandra	Stenographer, Bengal Telephone Corporation, Ld	8, Hare Street	ditto
	Gupta, Prabhat Kumar	Engineer, F & C Osler, Ld	12, Old Court House Street	ditto
	Gupta, Prem Sagar	Assistant Engineer, Asbestos Cement, Ld	135, Canning Street	ditto
	Gupta, Priyanath	Examiner of Accounts, Income-tax Office	3, Government Place, West	ditto
	Gupta, Purnendu, BA	Assistant, Bengal Secretariat, Police Department	Writers' Buildings	ditto
	Gupta, Santos Kumar	Stenographer, Plummer Bros & Co	5 & 6, Fancy Lane	ditto
	Gupta, Satya Charan	Clerk, D A G P & T Office	7, Koilaghat Street	ditto
	Gupta, Satya Charan	Clerk, Agent's Office, E B R	3, Koilaghat Street	ditto
	Gupta, Satya Ranjan	Clerk, C O P S Office, E I R	E I R House	ditto
	Gupta, Satyendra Nath	Inspector, License Department, Calcutta Corporation	Municipal Office	ditto
	Gupta, Shailaja Prasad	Assistant, Reed Ward & Co	6, Lyons Range	ditto
	Gupta, Shishir Kumar, BA	Head Assistant, Income-tax Office	3, Government Place, West	ditto

Gupta, Shishir Kumar, BA	Clerk, D A G P & T Office	7, Koilaghat Street	ditto
Gupta, Shyamsundar Lal	Clerk, C C M's Office, E I R	E I R House	ditto
Gupta, S N	Head Clerk, Office of the Registrar of Joint Stock Companies, Bengal.	Treasury Buildings	ditto
Gupta, Sukumar, BA	Assistant, Agriculture and Industries Department, Bengal	Writers' Buildings	ditto
Gupta, Surendra Nath	Assistant, Accounts Department, Calcutta Corporation	Municipal Office	ditto
Gupta, Tarakdas	Salesman, C C Wakefield & Co, Ld	7, Royal Exchange Place	ditto
Guzdar, N D	Head Clerk, Imperial Chemical Industries (India), Ld	18, Strand Road	Zoroastrian

H

Hadi, Abdul, M A	Clerk, C A O's Office, E I R	E I R House	Mahomedan
Hafiz, Mahomed Abdul, MA	Assistant, Bengal Secretariat, Irrigation Department	Writers' Buildings	ditto
Hafiz, Mahomed Abdul	Assistant, Bengal Secretariat, Commerce Department	Writers' Buildings	ditto
Hafizullah, A S, MA	S A S (Apprentice), Accountant-General's Office, Bengal	Treasury Buildings	ditto
Hai, M Abdul	Assistant, Accounts Department, Calcutta Corporation	Municipal Office	ditto
Hait, Shantiram, BA	Assistant, Accountant-General's Office, Bengal	Treasury Buildings	Hindu
Halder, Anukul Chandra	Clerk. Traffic Deptt, E B R	3, Koilaghata Street	ditto

No.	Names.	Style or calling.	Residence or place of business.	Religion.
	Haldar, Bangshidhar, BA	Inspector, License Department, Calcutta Corporation	Municipal Office	Hindu
	Haldar, Bankim Bihari	Clerk, Gillanders, Arbuthnot & Co	8, Clive Street	ditto
	Haldar, Bhajahari	Assistant, Reserve Bank of India	8, Council House Street	ditto
	Haldar, Gopendra Kr	Clerk, Telegraph Check Office	33, Dalhousie Square, South	ditto
	Haldar, Manindra Nath	Head Draftsman, Engineer's Office, E B R	3, Kaylaghat Street	ditto
	Haldar, Monmohan	Assistant, Mercantile Marine Department	15-1, Strand Road	ditto
	Haldar, Narayan Chandra, MA	Clerk, D A G P & T Office	7, Koilaghat Street	ditto
	Haldar, Narayan Chandra	Clerk, Burmah Shell Co of India, Ld	Hongkong House	ditto
	Haldar, Navataru	Assistant, Central Stationery Office	3, Church Lane	ditto
	Haldar, Nishikanta	Clerk, *Statesman*, Ld	Statesman House	ditto
	Haldar, Pradyot Kumar, BA	Assistant, Calcutta University	Senate House	ditto
	Haldar, Prafulla Chandra, MA	Assistant, Accountant-General's Office, Bengal	Treasury Buildings	ditto
	Haldar, Prasad Das	Inspector, Collection Department, Calcutta Corporation	Municipal Office	ditto
	Haldar, Rabindra Nath	Clerk, Telegraph Check Office	33, Dalhousie Square, South	ditto

Haldar, Sanat Kumar	Assistant, Income-tax Office	3, Government Place, West	ditto
Haldar, Tarak Nath	Assistant, Brooke Bond (India), Ld	2, Metcalfe Street	ditto
Haldar, Upendra Krishna	Assistant F W Heilgers & Co	1-1, Clive Street	ditto
Halimuzzaman, Kazi Abdul Malik Muhammad.	Assistant, Bengal Secretariat, P W D	Writers' Buildings	Mahomedan
Hamid, A	Assessor, Income-tax Office	3 Government Place, West	ditto
Hamid, Abdul	Engraver, Drawing Office, Survey of India	13, Wood Street	ditto
Hamid, Sultan (Maulvi)	Assistant, Income-tax Office	6, Esplanade, East	ditto
Hamidulla, Ali Ahmad	Assistant, Bengal Secretariat, Accounts Department	Writers' Buildings	ditto
Hannan, Abdul	Assistant, Office of the I-G of Police	Writers' Buildings	ditto
Harun-ar-Rashid (Maulvi)	Assistant, Bengal Secretariat, Political (Special) Department	Writers' Buildings	ditto
Hassan, A B Z	Special Inspector, Traffic Department, E B R	3, Koilaghat Street	ditto
Hastir, Ram Narayan	Extra Assistant Superintendent, Drawing Office, Survey of India	13, Wood Street	Hindu
Hazi, Altafar Rahman	Assistant, Surgeon-General's Office, Bengal	Writers' Buildings	Mahomedan
Hazra, Annada Charan	Assistant, Income-tax Office	6, Esplanade, East	Hindu
Hazra, B B	Head Clerk, McGregor & Balfour, Ld	11, Clive Street	ditto

No.	Names	Style or calling.	Residence or place of business.	Religion.
	Hazra, Jatindra Nath	Clerk, Telegraph Check Office	33, Dalhousie Square, South	Hindu
	Hazra, Nabagopal, BA	Assistant, Board of Revenue, Bengal	Writers' Buildings	ditto
	Hazra, Nanda Lal	Clerk, Secretary's Department, Port Commissioners' Office	Strand Road	ditto
	Hazra, Paresh Nath	Clerk, Imperial Bank of India	3, Strand Road	ditto
	Hazra, Radhika Prasad	Clerk, Estate Supdt's Office, Port Commissioners	Strand Road	ditto
	Hazra, Sharat Chandra, BA	Clerk, D A G P & T Office	7, Koilaghat Street	ditto
	Hazra, Shashadhar, BCom	Assistant, Central Stationery Office	3, Church Lane	ditto
	Hazra, Surendra Nath	Head Clerk, Blackwood, Bryson & Co, Ld	2, Mangoe Lane	ditto
	Hazra, Surendra Nath	Clerk, D A G P & T Office	7, Koilaghat Street	ditto
	Hazra, Upendra Nath	Clerk, Jardine, Skinner & Co	4, Clive Row	ditto
	Hemmady, Shivashanka Laxmanrao	Assistant, Burmah Shell Co of India, Ltd	Hongkong House	ditto
	Homair, Shah Mahomed	Assistant Superintendent, C O S Office, E I R	E I R House	Mahomedan
	Hossain, Afzal, BL	Assessing Inspector, Calcutta Corporation	Municipal Office	ditto
	Hossain, Akhtar, MA	Lecturer, Islamia College	8, Wellesley Street	ditto
	Hossain, Hamid	Chemical Assistant, Central Stationery Office	3, Church Lane	ditto
	Hossain, Khondkar Mokarram, BA	Head Assistant, Agriculture and Industries Department, Bengal	Writers' Buildings	ditto
	Hossain, M	Assistant, Mackinnon, Mackenzie & Co	8, Strand Road	ditto

Hossain, Mahammad (Maulvi)	Assistant, Income-tax Office	6, Esplanade, East	ditto
Hossain, Mahomed Sakhawat, BL	Assistant, Bengal Secretariat, Marine Department	Writers' Buildings	ditto
Hossain, Mahomed Tafazzal (Maulvi), BA	Assistant, Bengal Secretariat, Political Department	Writers' Buildings	ditto
Hossain, Mudasser (Maulvi)	Assistant, Office of the Private Secy to H E the Governor of Bengal	Government House	ditto
Hossain, Nural (Maulvi)	Assistant, Legislative Department, Bengal	Council House	ditto
Hossain, Quazi Akram, MA	Lecturer, Islamia College	8, Wellesley Street	ditto
Hossain, Safdar, BA (Cal)	Examiner of Accounts, Income-tax Office	6, Esplanade, East	ditto
Hossain, Sm Mozaffar	Clerk, Telegraph Check Office	33, Dalhousie Square, South	ditto
Hossain, Syed Akhtar, MA	Examiner of Accounts, Income-tax Office	1, Hare Street	ditto
Hossain, Tafazzal (Maulvi)	Assistant, Income-tax Office	3, Government Place, West	ditto
Hossain, Uz-Zaman	Assistant, Office of the Director of Industries, Bengal	40-1A, Free School Street	ditto
Hukoo, Harihar Nath	Clerk, C O P S Office, E I R	E I R House	Hindu
Huq, Abedul	Head Clerk, Income-tax Office	3, Government Place, West	Mahomedan
Huq, A K Manzural	Lecturer, Islamia College	8, Wellesley Street	ditto
Huq, Amjed Zahurul	Gallery Assistant, Victoria Memorial Hall	Victoria Memorial Hall	ditto
Huq, Anwarul, BA	Assistant, Bengal Secretariat, P W D	Writers' Buildings	ditto
Huq, Azmatul	Assessor, Income-tax Office	6, Esplanade, East	ditto

No.	Names.	Style or calling.	Residence or place of business.	Religion.
	Huq, A N M Serajul, BA	Assessor, Income-tax Office	3, Government Place. West	Mahomedan
	Huq, Enamel (Maulvi)	Assistant, General Department, Calcutta Collectorate	3, Charnock Place	ditto
	Huq, K A	Clerk, Telegraph Check Office	33, Dalhousie Square, South	ditto
	Huq, Kazi Shamsul	Clerk, Telegraph Check Office	33, Dalhousie Square, South	ditto
	Huq, M, BCom	Examiner of Accounts, Income-tax Office	6, Esplanade, East	ditto
	Huq, M M	Reader, Govt of India Press	8, Hastings Street	ditto
	Huq, M T	Clerk, D A G P & T Office	7, Koilaghat Street	ditto
	Huq, Md Fazlul, BL	Head Clerk, Income-tax Office	3, Government Place, West	ditto
	Huq, Raqibul, MA	Inspector Surveyor, Income-tax Office	3, Government Place, West	ditto
	Huq, Shamsul, MA	Lecturer, Islamia College	8, Wellesley Street	ditto
	Huq, Shamsul	Clerk, D A G P & T Office	7, Koilaghat Street	ditto
	Huq, Sheikh Nurul, BA	Assistant, Accountant-General's Office, Bengal	Treasury Buildings	ditto
	Huq, Sheikh Shamsul (Maulvi)	Assistant, Bengal Secretariat, Police Department	Writers' Buildings	ditto
	Huq, S S	Assistant, Mackinnon, Mackenzie & Co	8, Strand Road	ditto
	Huq, Syed Zaharul (Maulvi)	Assistant, Bengal Secretariat, L S-G Department	Writers' Buildings	ditto
	Huq, Zahurul	Secretary, Remington Rand Inc	3, Council House Street	ditto

Ibrahim, Shaikh Mahammad, BSc	Lecturer, Calcutta Technical School	110, Surendra Nath Banerjee Road	Mahomedan
Indra, Satish Chandra	Accountant, Land Acquisition Collector's Office	5, Bankshall Street	Hindu
Ishaque, Mahammad (Maulvi)	Assistant, Bengal Secretariat, Irrigation Department	Writers' Buildings	Mahomedan
Islam, Hedayetul (Maulvi), BSc	Laboratory Assistant, Islamia College	8, Wellesley Street	ditto
Iyer, Chittur Venkataswara	Clerk, Alliance Assurance Co, Ld	2, Hare Street	Hindu
Iyer, Comal Rajagopal Krishnamurthi	Assistant, Andrew, Yule & Co, Ld	8, Clive Row	ditto
Iyer, Ganapati Mohadeb	Assistant, Agent's Office, E I R	E I R House	ditto
Iyer, Ganjai Kondinsundaram Subramania.	Stenographer, Accounts Department, E B R	3, Kaylaghat Street	ditto
Iyer, K G Krishna	Clerk, Prudential Assurance Co, Ld	Clive Buildings	ditto
Iyer, K K	Assistant, Llewelyn & Co	9-1, Waterloo Street	ditto
Iyer, K S Shanker	Assistant, F W Heilgers & Co	1-1, Clive Street	ditto
Iyer, Kuppyswami Narayanswami	Audit Clerk, Thos Cook & Son	4, Dalhousie Square	ditto
Iyer, Muthuswamy Panchapakesa	Assistant, Andrew, Yule & Co, Ld	8, Clive Row	ditto
Iyer, M V S	W & W Department, E I R	E I R House	ditto
Iyer, Narain	Assistant, D J Keymer & Co, Ld	4, Lyons Range	ditto
Iyer, N D	Assistant, National Insurance Co, Ld	7, Council House Street	ditto
Iyer, N K, BA	Assistant, Office of the Controller of Currency	Treasury Buildings	ditto
Iyer, N Raghunath, BA	Assistant, Commercial Intelligence Department, India	1, Council House Street	ditto

No	Names.	Style or calling.	Residence or place of business.	Religion.
	Iyer, N Ramaswami	Assistant Accountant, Port Commissioners' Office	Strand Road	Hindu
	Iyer, P A Sankara	Assistant, Andrew, Yule & Co, Ld	8, Clive Row	ditto
	Iyer, P N K	Accountant, C A O's Office, E I R	E I R House	ditto
	Iyer, R A	Assistant, A-G's Office, Bengal	Treasury Buildings	ditto
	Iyer, Ramaswami	Assistant, Bengal Secretariat, Revenue Department	Writers' Buildings	ditto
	Iyer, Ram Krishna	Cashier and Accountant, Royal Asiatic Society of Bengal	1, Park Street	ditto
	Iyer, S Krishna	Assistant, Balmer, Lawrie & Co, Ld	103, Clive Street	ditto
	Iyer, S Rama	Stenographer, C A O's Office, E I R	E I R House	ditto
	Iyer, Varetha	Stenographer, George O Penn (India), Ld	22, Chowringhee	ditto
	Iyer, Venkata Subramaniya	Head Clerk, Bengal Iron Co, Ld	4, Lyons Range	ditto
	Iyer, V Sundaram	Accounts Clerk, E B R	3, Koilaghat Street	ditto
	Iyer, V V P	Assistant, Oriental Government Security Life Assurance Co, Ld	2, Clive Row	ditto
	J			
	Jafer, G R	Assistant Manager, Adamjee Hajee Dawood & Co, Ld	4, Dalhousie Square, East	Mahomedan
	Jagannathan, Rangaswami, MA	Assistant, Tata Iron & Steel Co, Ld	100, Clive Street	Hindu
	Jahan, Md Mir, MA	Lecturer, Islamia College	8, Wellesley Street	Mahomedan

Jalil, Mahamad Abdul (Maulvi)	Assistant, Bengal Secretariat, P W D	Writers' Buildings	ditto
Jamil, Md Tahir, M A	Lecturer, Islamia College	8, Wellesley Street	ditto
Jani, B L	Cashier, Central Bank of India, Ld	71, Cross Street	Hindu
Jethabhai, Devidas	Accountant, Jupiter General Insurance Co, Ld	7, Pollock Street	ditto
Joardar, Abalakanta	Assistant, Central Forms Store	166, Dharamtala Street	ditto
Joardar, A D	Inspector of Factories, Bengal	40-1A, Free School Street	ditto
Joardar, Mahbub Ali	Assistant, Bengal Secretariat, Finance Deptt	Writers' Buildings	Mahomedan
Joshi, Krishna Rao	Examiner of Stores, Indian Stores Department (Inspection)	6, Esplanade, East	Hindu
Jubbar, Abdul, MA, BL	Examiner of Accounts, I T Office	1, Hare Street	Mahomedan
Junnakar, N R	Assistant, Octavius Steel & Co, Ld	14, Old Court House Street	Hindu

K

Kadir. Abdul (Maulvi), BA	Assistant, Office of the Controller of Currency	Treasury Buildings	Mahomedan
Kaha, K S	Assistant Manager, Prominent Sports, Ld	19C, Chowringhee	Hindu
Kaka, Ardeshir Rustomji	Assistant, Tata Iron & Steel Co, Ld	100, Clive Street	Zoroastrian
Kalra, Mohan Singh	Cashier, Punjab National Bank, Ld	135-36, Canning Street	Sikh
Kamat, H R	Assistant, F W Heilgers & Co	1-1, Clive Street	Hindu
Kanga, Dara, BA	Cashier & Accountant, Callendar's Cable & Constrn Co, Ld	2, Pollock Street	Zoroastrian
Kanjilal, Dhirendra Nath, BA	Assistant, Accountant-General's Office, Bengal	Treasury Buildings	Hindu
Kanjilal, Nishi Bhusan, BA	Clerk, D A G P & T Office	7, Koilaghat Street	ditto

Names.	Style or calling.	Residence or place of business.	Religion.
Kanthal, Bibhuti Bhusan, MA	Lecturer, Ripon College	24, Harrison Road	Hindu
Kapoor, Durga Prasad	Assistant, Allahabad Bank, Ld	6, Royal Exchange Place	ditto
Kapoor, K L	Claims Inspector, Traffic Department, E B R	3, Koilaghat Street	ditto
Kapoor, Narain Das	Assistant, Allahabad Bank, Ld	6, Royal Exchange Place	ditto
Kar, Bipin Bihari	Assistant Superintendent, Reserve Bank of India	8, Council House Street	ditto
Kar, Krishna Charan	Assistant, Bengal Secretariat, Finance Department	Writers' Buildings	ditto
Kar, Kulesh Chandra	Lecturer, Presidency College	86-1, College Street	ditto
Kar, Nalini Mohan	Cashier, Bengal Provincial Co-operative Bank, Ld	Writers' Buildings	ditto
Kar, Ranadhir, BA	Audit Clerk, U M Chaudhuri & Co	12-1, Old Post Office Street	ditto
Kar, Sunil Chandra, BA	Assistant, A-G's Office, Bengal	Treasury Buildings	ditto
Kar Gupta, Upendra Nath	Overseer, Ex Engineer's Office, City Division, P W D	Writers' Buildings	ditto
Karim, A S M	Assistant Master, Calcutta Madrassah	19, Wellesley Square	Mahomedan
Karim, Bazlal (Maulvi), BA	Con_Overseer, Calcutta Corporation, D E I	79, Cornwallis Street	ditto
Karmakar, Annada Ch	Clerk, Calcutta Improvement Trust	5, Clive Street	Hindu
Karmakar, Bhola Nath	Clerk, D A G P & T Office	7, Koilaghat Street	ditto
Karmakar, Bijay Krishna, BA	Clerk, D A G P & T Office	7, Koilaghat Street	ditto
Karmakar, Haridas	Assistant, Bengal Secretariat, Irrigation Department	Writers' Buildings	ditto

Katre, Sarju R	Clerk, Burmah Shell Co of India, Ld	Hongkong House		ditto
Karmakar, Jogneshwar	Senior Estimator, Spl Officer's Department, Calcuta Corporation	Municipal Office		ditto
Karmakar, Prafulla Chandra	Engrg Overseer, Calcutta Corporation, D E I	79, Cornwallis Street		ditto
Karmakar, Prahlad Chandra	Assistant Designer, Government School of Art	28, Chowringhee		ditto
Karmakar, Satya Charan	Clerk, D A G P & T Office	7, Koilaghat Street		ditto
Karmakar, Shibnath	Book-keeper, Landale and Clark Ld	11, Clive Street		ditto
Karmakar, Shyama Charan, MA, BL	Assessing Inspector, Calcutta Corporation	Municipal Office		ditto
Karmakar, Suresh Chandra	Assistant Engineer, J C Banerjee, Ld	20, Strand Road		ditto
Kasem, Md Abul (Maulvi)	Assistant, Bengal Secretariat, L S-G Department	Writers' Buildings		Mahomedan
Kassim, Md Abul, B COM	Examiner of Accounts, Income-Tax Office	6, Esplanade, East		ditto
Kassim, Md Syed	Assistant, A-G's Office, Bengal	Treasury Buildings		ditto
Katra, G Ram	Assistant, Bird & Co	1-1, Clive Street		Hindu
Katre Sarju R	Clerk, Burmah Shell Co of India, Ld	Hongkong House		ditto
Katre, Vithal Mangesh	Clerk, Burmah Shell Co of India, Ld	Hongkong House		ditto
Khabiruddin, Sarda Mahamad (Maulvi), BA	Assistant, Legislative Department, Bengal	Council House		Mahomedan
Khair, Maulvi Abul	Assistant, Office of the Director of Public Instruction, Bengal	Writers' Buildings		ditto
Khair, Md Abul, BA	Clerk, Telegraph Check Office	33, Dalhousie Square, South		ditto
Khalil, Mahammad, BA, BT	Assistant Head Master, Calcutta Madrassah	19, Wellesley Square		ditto
Khaliq, Abdul	Lecturer, Presidency College	86-1, College Street		ditto
Khan, Abani Nath, MA	Assistant, Accountant-General's Office, Bengal	Treasury Buildings		Hindu
Khan, Abbas Ali, MA	Lecturer, Islamia College	8, Wellesley Street		Mahomedan
Khan, Abdul Bari (Maulvi)	Assistant, Bengal Secretariat, Political Department	Writers' Buildings		ditto

No.	Names.	Style or calling.	Residence or place of business.	Religion.
	Khan, Abdul Hossain	Clerk, D A G P & T Office	7, Koilaghat Street	Mahomedan
	Khan, Abdul Karim (Maulvi)	Assistant, Office of the Director of Public Health, Bengal	Writers' Buildings	ditto
	Khan, Abdur Rahman (Maulvi)	Assistant, Bengal Secretariat, L S-G Department	Writers' Buildings	ditto
	Khan, Abul Ali, BA	Clerk, D A G P & T Office	7, Koilaghat Street	ditto
	Khan, Amarnath	Assistant, Accountant-General's Office, Bengal	Treasury Buildings	Hindu
	Khan, Azizur Rahman (Maulvi)	Assistant, Bengal Secretariat Record-room	Writers' Buildings	Mahomedan
	Khan, Benode Bihari	Assistant, Mackinnon, Mackenzie & Co	16, Strand Road	Hindu
	Khan, Bhupendra Nath	Assistant, Grahams Trading Co (India), Ld	6, Lyons Range	ditto
	Khan, M A	Apprentice, Oriental Govt Security Life Assurance Co, Ld	2, Clive Row	Mahomedan
	Khan, Mahomed Ayub (Maulvi), BA	Assistant, Bengal Secretariat, Political Department (Jails Branch)	Writers' Buildings	ditto
	Khan, Md Ziaul Abedin (Maulvi), MA	Assistant, Bengal Secretariat, Irrigation Department	Writers' Buildings	ditto
	Khan, Nani Gopal	Head Clerk, Traffic Department, E B R	3, Kaylaghat Street	Hindu
	Khan, Samsam-Uddin (Maulvi), BA	Assistant, Bengal Secretariat, Political Department (Jails Branch)	Writers' Buildings	Mahomedan
	Khan, Serajul Islam, MA	Assessor, Income-tax office	3, Government Place, West	ditto
	Khan, Shamser Ali (Maulvi), BL	Assistant, Bengal Secretariat, Appointment Department	Writers' Buildings	ditto
	Khan, Shib Krishna, B SC	Clerk, D A G P & T Office	7, Koilaghat Street	Hindu
	Khanna, Bhairo Prasad	Clerk, Allahabad Bank, Ld	6, Royal Exchange Place	ditto
	Khanna, Hari Sanker Lal	Clerk, Allahabad Bank, Ld	6, Royal Exchange Place	ditto
	Khasnabis, Ramesh Chandra	Surveyor and Valuer, Land Acquisition Office	5, Bankshall Street	ditto

Khawja, Nasiruddin	Sec Sub-Head, C C M's Office, E I R	E I R House	Mahomedan
Khizir, Mahomed Ghulam (Maulvi)	Assistant, Public Health Department, Bengal	Writers' Buildings	ditto
Khondkar, Mahomed Hosainuddin	Head Clerk, Office of the Assistant Director of Public Instruction for Muhammadan Education, Bengal.	Writers' Buildings	ditto
Khondkar, Samsuddin	Assistant, Bengal Secretariat, Revenue Department	Writers' Buildings	ditto
Khosla, Jaswant Rai, BA	Assistant, K C Thapar & Bros, Ld	5, Royal Exchnge Place	Hindu
Khosla, K C	Assistant Engineer, Indian Stores Department (Inspection)	6, Esplanade, East	ditto
Koar, Chittobinodan, MB	Food Insector, Calcutta Corporation	79, Cornwallis Street	ditto
Konar, Jatindra Nath	Office Supdt, Traffic Department, E B R	3, Kaylaghat Street	ditto
Kothary, Shiva Singh	Hd Assistant, Birla Brothers, Ld	8, Royal Exchange Place	ditto
Koyal, Adhar Chandra	Clerk, D A G P & T office	7, Koilaghat Street	ditto
Krishna, Srinivasa	Head Clerk, G D Peters (India), Ld	10, Clive Street	ditto
Krishnamurtty, Mahalinga	Stenographer, British Insulated Cables, Ld	2, Waterloo Street	ditto
Krishnaswami, Venadhirajopuran Sambasiva-Iyer, BA	Stenographer, Patent Office	1, Council House Street	ditto
Kulkarni, Dinanath Raghvendra, B Com	Assistant, Tata Iron & Steel Co, Ld	100, Clive Street	ditto
Kulkarni, P P	Assistant Electrical Engineer, E I R	E I R House	ditto
Kumar, Atal Krishna	Bill Collector, Bengal Telephone Corporation, Ld	8, Hare Street	ditto
Kumar, Fanibhusan	Clerk, D A G P & T Office	Hongkong House	ditto
Kumar, Kanai Lal	Assistant, Bengal Secretariat, Political Department	Writers' Buildings	ditto
Kumar, Surendra Nath	Clerk, Telegraph Check Office	33, Dalhousie Square, South	ditto

No.	Names.	Style or calling.	Residence or place of business.	Religion.
	Kumar, Tinkari	Clerk, Shaw, Wallace & Co	4, Bankshall Street	Hindu
	Kundan, Lall Malhotra	Assistant, Martin & Co	12, Mission Row	ditto
	Kundu, Amarendra Nath, BA	Clerk, D A G P & T Office	7, Koilaghat Street	ditto
	Kundu, Bhupendra Nath	Clerk, Place, Siddons & Gough	6, Lyons Range	ditto
	Kundu, Dhirendra Nath	Assistant, Bengal Secretariat, L S-G Department	Writers' Buildings	ditto
	Kundu, Dulal Chandra	Offig Head Assistant, Surgeon-General's Office, Bengal	Writers' Buildings	ditto
	Kundu, Fakir Chandra	Ch Ledger Clerk, Thos Cook & Son, Ld	4, Dalhousie Square	ditto
	Kundu, Indu Bhusan, B.Sc	Clerk, D A G P & T Office	7, Koilaghat Street	ditto
	Kundu, Jatindra Nath	Clerk, D A G P & T Office	7, Koilaghat Street	ditto
	Kundu, Jay Krishna	Clerk, Chartered Bank of India, Australia and China	1-1, Clive Street	ditto
	Kundu, J D, BA	Accountant, Britannia Biscuit Co, Ld	Stephen House	ditto
	Kundu, Keshab Chandra	Assistant, National Insurance Co, Ld	7, Council House Street	ditto
	Kundu, Keshab Chandra	Clerk, Ralli Bros, Ld	16, Hare Street	ditto
	Kundu, Manik Chandra	Examiner of Stores, Indian Stores Department (Inspection)	6, Esplanade, East	ditto
	Kundu, M C	Clerk, Office of the Chief Mining Engineer, Railway Board	1, Council House Street	ditto
	Kundu, Nanda Lal	Clerk, D A G P & T Office	7, Koilaghat Street	ditto
	Kundu, Narendra Mohan, BA	Inspector, Sir Stuart Hogg Market	Sir Stuart Hogg Market	ditto
	Kundu, Nripendra Nath	Assistant, Price, Waterhouse, Peat & Co	B-4, Clive Buildings	ditto
	Kundu, Prafulla Kumar, B COM, GDA	Examiner of Accounts, I T Office	3, Government Place, West	ditto
	Kundu, Pramatha Nath	Assistant, Bengal Secretariat, Accounts Department	Writers' Buildings	ditto
	Kundu, Priya Nath, MSc	Lecturer, Ripon College	24, Harrison Road	ditto

Kundu, Rajendra Nath	Assistant, James Finlay & Co, Ld	1, Clive Street	ditto
Kundu, Ramsaran	Assistant, Calcutta University	Senate House	ditto
Kundu, Satya Charan	Assistant, Income-tax Office	Imperial Secretariat Buildings	ditto
Kundu, Subodh Nath, B A	Assistant, Bengal Secretariat, Political Department	Writers' Buildings	ditto
Kundu, Sushil Kumar	Clerk, C A 's Office, E I R	E I R House	ditto
Kushiari, Rohini Kumar	Assistant, Bengal Secretariat Record Room	Writers' Buildings	ditto

L

Laha, Amulya Ch	Assistant, Bird & Co	1-1, Clive Street	Hindu
Laha, Charu Chandra	Assistant, Bird & Co	1-1, Clive Street	ditto
Laha, H K	Head Clerk, Java Sea & Fire Insurance Co, Ld	4, Lyons Range	ditto
Laha, Kanai Lal	Computor, Government of India Press	8, Hastings Street	ditto
Laha, Krishna Chandra	Assistant, Bird & Co	1-1, Clive Street	ditto
Laha, Lalit Mohan	Surveyor & Valuer, Land Acquisition Office	5, Bankshall Street	ditto
Laha, Nilmani	Cashier (Collection), Port Commissioners' Office	Strand Road	ditto
Laha, Prafulla Kumar, BA	Assistant, Bengal Secretariat, Accounts Department	Writers' Buildings	ditto
Laha, Radhika Prasad	Clerk, Shaw, Wallace & Co	4, Bankshall Street	ditto
Laha, Rasaraj	Head Clerk, E Meyer & Co (1926), Ld	2, Clive Ghat Street	ditto
Laha, Shital Chandra	Accounts Clerk, E B R	3, Koilaghat Street	ditto
Laha, Surendra Nath	Clerk, Shaw, Wallace & Co	4, Bankshall Street	ditto
Lahiri, Abinash Chandra	Clerk, Telegraph Check Office	33, Dalhousie Square, South	ditto
Lahiri, Baidyanath	Assistant, Loyelock & Lewes	4, Lyons Range	ditto
Lahiri, Benoy Chandra	Clerk, D A G P & T Office	7, Koilaghat Street	ditto

No.	Names.	Style or calling.	Residence or place of business.	Religion.
	Lahiri, Benode Prasanna	Head Clerk, Ex-Engineer's Office, Dredger Division	3, Charnock Place	Hindu
	Lahiri, Chandra Lochan, BA	Clerk, Lloyds Bank, Ld	101-1, Clive Street	ditto
	Lahiri, Chintamani	Assistant, Mackinnon, Mackenzie & Co	16, Strand Road	ditto
	Lahiri, Chunilal	Superintendent, Unique Assurance Co, Ld	10, Canning Street	ditto
	Lahiri, Dhaneshwar	Assistant, Lovelock & Lewes	4, Lyons Range	ditto
	Lahiri, Dhirendra Nath	Superintendent, C-C Dept, Central Bank of India, Ld	100, Clive Street	ditto
	Lahiri, Dinesh Chandra	Assistant, Suptg Engineer's Office, S Circle, P W D	3, Government Place, West	ditto
	Lahiri, Girish Chandra	Assistant, Bird & Co	1-1, Clive Street	ditto
	Lahiri, Harendra Nath	Reader, Govt. of India Press	8, Hastings Street	ditto
	Lahiri, Harinath	Clerk, Agent's Office, E I R	E I R House	ditto
	Lahiri, J C	Assistant, Guest, Keen, Williams, Ld	7, Council House Street	ditto
	Lahiri, Krishna Chandra, MA	Professor, City College	102/1, Amherst Street	ditto
	Lahiri, Lalit Mohan	Clerk, D A G P & T Office	7, Koilaghat Street	ditto
	Lahiri, Manmatha Nath	Clerk, Turner, Morrison & Co, Ld	6, Lyons Range	ditto
	Lahiri, Mukunda Murari	Audit Clerk, E B R	3, Kaylaghat Street	ditto
	Lahiri, N G	Inspector, Oriental, Govt Security Life Assurance Co, Ld	2, Clive Row	ditto
	Lahiri, Nagendra Nath	Accounts Clerk, D J Keymer & Co, Ld	4, Lyons Range	ditto
	Lahiri, Nirmalya Kumar	Clerk, C O S S's Office, E I R	E I R House	ditto
	Lahiri, Shyamapada	Assistant, Accountant-General's Office, Bengal	Treasury Buildings	ditto
	Lahiri Chaudhuri, Nripendra Kanta	Assistant, Excise Commissioner's Office, Bengal	Writers' Buildings	ditto

Lal, Anokhey	Clerk, C A O's Office, E I R	E I R House	ditto
Lal, Babu	Section Superintendent, Engineer's Office, E B R	3, Koilaghat Street	ditto
Lal, Mahabbat	Clerk, Allahabad Bank, Ld	6, Royal Exchange Place	ditto
Lateef, Abdul (Maulvi)	Assistant Reader, Bengal Library	Writers' Buildings	Mahomedan
Lateef, Abdul, BA	Clerk, D A G P & T Office	7, Koilaghat Street	ditto
Lateef, Abdul	Assistant, Bengal Secretariat, Revenue Deptt	Writers' Buildings	ditto
Law, Nagendra Kumar	Clerk, Royal Calcutta Turf Club	11, Russell Street	Hindu
Lodh, Nagendra Kumar, MA	Teacher, Bangabasi College School	19, Scott Lane	ditto

M

Madan, Behram Shapurji	Accountant, Royal Exchange Assurance	1 & 2, Old Court House Street	Zoroastrian
Madgavkar, Keshav Dinanath	Accountant, Scindia Steam Navigation Co, Ld	100, Clive Street	ditto
Mahmud, Hafiz Syed Mahammad	2nd Maulvi, Calcutta Madrassah	19, Wellesley Square	Mahomedan
Mahomed, Baksh	Clerk, D A G P & T Office	7, Koilaghat Street	ditto
Mahomed, Haji Valli	Assistant, Norman Ross & Co	3, Clive Street	ditto
Mahomed, Jamsed	Surveyor & Estimator, Calcutta Corporation	Municipal Office	ditto
Mahomed, Nabi, MSc	Assistant, Bengal Secretariat, Finance Department	Writers' Buildings	ditto
Mahomed, Noor, B A	Assessing Inspector, Calcutta Corporation	Municipal Office	ditto
Mahomed, Sahiduddin (Maulvi), BA	Assistant, Bengal Secretariat, Marine Department	Writers' Buildings	ditto
Maitra, Anil Kumar	Clerk, Martin & Co	12, Mission Row	Hindu
Maitra, Asit Chandra	Assistant, Brooke Bond (India), Ld	2, Metcalfe Street	ditto
Maitra, Baikuntha Nath	Assistant, Holmes, Wilson & Co, Ld	Norton Buildings	ditto
Maitra, Banges Chandra, BA	Agent, Central Bank of India, Ltd	133, Cornwallis Street	ditto

No.	Names.	Style or calling.	Residence or place of business.	Religion.
	Maitra, Bhupendra Nath	Demonstrator, Presidency College	86-1, College Street	Hindu
	Maitra, Haripada	Accountant, Improvement Trust Tribunal	6, Hastings Street	ditto
	Maitra, Kalipada	Cashier, Williamson, Magor & Co	4, Mangoe Lane	ditto
	Maitra, Kalipada	Clerk, Burmah Shell Co of India, Ld	Hongkong House	ditto
	Maitra, Kalipada	Stenographer, Bengal Secretariat, Finance Department	Writers' Buildings	ditto
	Maitra, Manmatha Nath	Assistant, Income-tax Office	3, Government Place, West	ditto
	Maitra, Prabodh Chandra	Assistant, Calcutta University	Senate House	ditto
	Maitra, Pramatha Nath	Assistant Accountant, Begg Dunlop & Co, Ld	2, Hare Street	ditto
	Maitra, Satyendra Nath	Assistant, Hoare Miller & Co, Ld	5, Fairlie Place	ditto
	Maitra, S C	Assistant, The Gas Accumulator Co (India), Ld	12, Mission Row	ditto
	Maitra, Shachindra Nath	Assistant, Shaw, Wallace & Co	4, Bankshall Street	ditto
	Maitra, Shivaram	Assistant, Andrew Yule & Co, Ld	8, Clive Row	ditto
	Maitra, Subodh Chandra	Assistant, Martin & Co	12, Mission Row	ditto
	Maitra, Sudhansu Sekhar	Assistant, Corn Products Co (India), Ld	4, Lyons Range	ditto
	Maitra, Surendra Nath	Clerk, Gillanders, Arbuthnot & Co	8, Clive Street	ditto
	Majid, Abdul, MA	Lecturer, Islamia College	8, Wellesley Street	Mahomedan
	Majid, Abdul	Assistant, I T Office	3, Government Place, West	ditto
	Majumdar, Ashutos	Assistant, Accounts Deptt, Calcutta Corporation	Municipal Office	Hindu
	Majumdar, Aswini Kumar	Assistant Accountant, Hindusthan Co-operative Insurance Society, Ld	Hindusthan Buildings	ditto

Majumdar, Bijaya K	Assistant, Octavius Steel & Co, Ld	14, Old Court House Street	ditto
Majumdar, Binaya Bhusan, BA	Clerk, Assessor's Department, Calcutta Corporation	Municipal Office	ditto
Majumdar, Bireswar	Clerk, Ford, Rhodes, Thornton & Co	Tower House	ditto
Majumdar, Charu Chandra, BA	Secretary, Samajpati Smriti Samity Library and Free Reading Room.	47-E, Shampukur Street	ditto
Majumdar, Charu Chandra, BA	Assistant, A G's Office, Bengal	Treasury Buildings	ditto
Majumdar, D	Accountant, Spence's Hotel, Ld	4, Wellesley Place	ditto
Majumdar, Dasharathi	Assistant, Accountant-General's Office, Bengal	Treasury Buildings	ditto
Majumdar, Devendra Chandra	Head clerk, British Insulated Cables, Ld	2, Waterloo Street	ditto
Majumdar, Dhirendra K	Clerk, C O S's Office, E I R	E I R House	ditto
Majumdar, D N	Estate Surveyor, Port Commissioners' Office	Strand Road	ditto
Majumdar, G C	Chief Agent, Bombay Co-operative Insurance Society, Ld	3, Commercial Buildings	ditto
Majumdar, Girish Chandra, BA	Teacher, City School	13, Mirzapur Street	Brahmo
Majumdar, Haraprasad	Head Clerk, India Provident Co, Ld	10, Clive Row	Hindu
Majumdar, Jahar Lal	Assistant, Bengal Secretariat Record Room	Writers' Buildings	ditto
Majumdar, Jatindra Nath	Assistant, Calcutta University	Senate House	ditto
Majumdar, Jiban Krishna, BA	Clerk, D A G P & T Office	7, Koilaghat Street	ditto
Majumdar, Jitendra Nath	Clerk, D A G P & T Office	7, Koilaghat Street	ditto
Majumdar, Jitendra Nath	Assistant, Roberts, McLean & Co, Ld	101, Clive Street	ditto
Majumdar, Jyotish Ch	Clerk, Telegraph Check Office	33, Dalhousie Square, South	ditto
Majumdar, Kashipati	Accounts Clerk, E B R	3, Koilaghat Street	ditto
Majumdar, Kishori Mohan	Clerk, Imperial Bank of India	3, Strand Road	ditto

No.	Names.	Style or calling.	Residence or place of business.	Religion.
	Majumdar, Kshitish Chandra	Stenographer, Union Insurance Society of Canton, Ld	8, Clive Street	Hindu
	Majumdar, Manindra Nath	Clerk, Harrisons & Crosfield, Ld	6, Church Lane	ditto
	Majumdar, Manmatha Nath, BSC	Assistant, Accountant-General's Office, Bengal	Treasury Buildings	ditto
	Majumdar, Nagendra Nath	Sanitary Officer, Calcutta Corporation	22, Mirzapore Street	ditto
	Majumdar, Nalini Nath	Surveyor, Calcutta Improvement Trust	5, Clive Street	ditto
	Majumdar, Narayan Chandra, BA	Teacher, Bangabasi College School	19, Scott Lane	ditto
	Majumdar, Niranjan	Accountant, Taylor's Gramophone Saloon	15-4, Chowringhee	ditto
	Majumdar, Nirmal Kanti, MA	Lecturer, Bethune College	181, Cornwallis Street	ditto
	Majumdar, Nripati Nath, BA	Assistant, Accounts Department, Calcutta Corporation	Municipal Office	ditto
	Majumdar, Phani Bhusan, MA	Clerk, D A G P & T Office	7, Koilaghat Street	ditto
	Majumdar, Pramatha	Inspector, Collection Department, Calcutta Corporation	Municipal Office	ditto
	Majumdar, Rabindra Mohan	Assistant, Accountant-General's Office, Bengal	Treasury Buildings	ditto
	Majumdar, Ranajit Kumar	Head Clerk, Calcutta Improvement Trust	5, Clive Street	ditto
	Majumdar, Saradindu Bhusan	Building Inspector, Calcutta Corporation	Municipal Office	ditto
	Majumdar, Satya Charan	Clerk, Place, Siddons & Gough	6, Lyons Range	ditto
	Majumdar, S C	Clerk, C E S C, Ld	Victoria House	ditto
	Majumdar, S C	Clerk, Office of the Chief Mining Engineer, Railway Board	1, Council House Street	ditto
	Majumdar, Shailendra Krishna	Assistant, A-G's Office, Bengal	Treasury Buildings	ditto
	Majumdar, Surabandhu, MA	Assistant, Commercial Intelligence Department, India	1, Council House Street	ditto
	Majumdar, Surendra Nath	Stenographer, Standard Literature Co, Ld	13-1, Old Court House Street	ditto
	Majumdar, Surendra Nath	Assistant, Office of the Director of Public Instruction, Bengal	Writers' Buildings	ditto

Majumdar, Suresh Chandra	Assistant, Office of the Inspector-General of Prisons, Bengal	Writers' Buildings	ditto
Majumdar, Upendra Nath	Surveyor & Estimator, Calcutta Corporation	Municipal Office	ditto
Malakar, Loke Nath	Head Draftsman, Deputy Conservator's Department, Port Commissioners' Office	Strand Road	ditto
Malakar, Umakanta	Overseer, City Division, P W D	Writers' Buildings	ditto
Malaviya, Mahadeo Prasad	Assistant, Allahabad Bank of India, Ld	6, Royal Exchange Place	ditto
Malaviya, Thakur Prasad	Assistant, Allahabad Bank, Ld	6, Royal Exchange Place	ditto
Malhotra, M L	Clerk, Agent's office, E I R	E I R House	ditto
Maha, H D	Head Clerk, Stores Department, E B R	3, Koilaghat Street	ditto
Mallik, Abdul, BA	Clerk, Telegraph Check Office	33, Dalhousie Square, South	Mahomedan
Mallik, Akbar Ali, MSc	Examiner of Accounts, Income-tax Office	6, Esplanade, East	ditto
Mallik, A P	Deputy Accountant, Calcutta Mint	47, Strand Road	Hindu
Mallik, Apurba Kumar	Clerk, D A G P & T Office	7, Koilaghat Street	ditto
Mallik, Baidya Nath	Peshkar, Presidency Commissioner's Office	3, Charnock Place	ditto
Mallik, Bata Krishna	Clerk, Burmah Shell Co of India, Ld	Hongkong House	ditto
Mallik, Bholanath	Clerk, Lloyds Bank, Ld	101-1, Clive Street	ditto
Mallik, Bholanath	Clerk, Imperial Bank of India	3, Strand Road	ditto
Mallik, Bibhupada, MA	Clerk, D A G P & T Office	7, Koilaghat Street	ditto
Mallik, Binode Bihari	Assistant, Accountant-General's Office, Bengal	Treasury Buildings	ditto
Mallik, Birendra Nath	Assistant, Martin & Co	12, Mission Row	ditto
Mallik, Bishnupada, BSc	Clerk, D A G P & T Office	7, Koilaghat Street	ditto

No.	Names.	Style or calling.	Residence or place of business.	Religion.
	Mallik, Ganendra Nath	Assistant, Babcock and Wilcox, Ld	4, Bankshall Street	Hindu
	Mallik, Gopinath	Assistant, Lionel Edwards, Ld	D-1, Clive Buildings	ditto
	Mallik, Haridas	Clerk, Ralli Brothers, Ld	16, Hare Street	ditto
	Mallik, Hiralal	Assistant, Accountant-General's Office, Bengal	Treasury Buildings	ditto
	Mallik, Jagannath	Clerk, Burmah Shell Co of India, Ld	Hongkong House	ditto
	Mallik. Janaki Nath	Book-keeper, Sinclair, Murray & Co, Ld	6, Royal Exchange Place	ditto
	Mallik, Jay Prakash	Clerk, Imperial Bank of India	3, Strand Road	ditto
	Mallik, Jitendra Nath	Cashier, Worthington-Simpson, Ld	10, Clive Street	ditto
	Mallik, Jnanranjan	Clerk, Calcutta Improvement Trust	5, Clive Street	ditto
	Mallik, Jogendra Narayan	Clerk, Agent's Office, E B R	3, Kaylaghat Street	ditto
	Mallik, Jyotish Chandra, BA	Game Supervisor, Scottish Church College	4, Cornwallis Square	Christian
	Mallik, Matiar Rahaman	Assistant, Accountant-General's Office, Bengal	Treasury Buildings	Mahomedan
	Mallik, Megh Nath	Clerk, Burmah Shell Co of India, Ld	Hongkong House	Hindu
	Mallik, Murari Mohan, BSC, BL	Clerk, Engineer's Office, E B R	3, Kaylaghat Street	ditto
	Mallik, Nagendra Nath	Assistant Accountant, Bengal Telephone Corporation, Ld	8, Hare Street	ditto
	Mallik, Nalin Krishna	Clerk, Agent's Office, E B R	3, Kaylaghat Street	ditto
	Mallik, Narendra Nath	Clerk, Martin & Co	12, Mission Row	ditto
	Mallik, Nitaichand	Clerk, I G N & Ry Co, Ld	4, Fairlie Place	ditto
	Mallik, Nritya Gopal	Assistant, Nestle and Anglo-Swiss Condensed Milk (Export) Co, Ld	9-A, Clive Street	ditto
	Mallik, Panchanan	Accounts Clerk, E B R	3, Koilaghat Street	ditto
	Mallik, Paresh Nath	Assistant, office of the I-G of Police, Bengal	Writers' Buildings	ditto

Mallik, P K	Assistant, P & O Banking Corporation, Ld	1, Fairlie Place	ditto
Mallik, P K	Accountant, The Manufacturers Life Insurance Co	27, Dalhousie Square	ditto
Mallik, Prabodh Kumar, B Sc	Assistant, Accountant-General's Office, Bengal	Treasury Buildings	Christian
Mallik, Prafulla Kumar	Assistant, Babcock & Wilcox, Ld	4, Bankshall Street	ditto
Mallik, Purna Chandra	Assistant, Lovelock & Lewes	4, Lyons Range	Hindu
Mallik, Purna Chandra	Assistant, Controller's Office, Calcutta University	Senate House	ditto
Mallik, Satya Charan	Accountant, Northern Assurance Co, Ld	7, Hare Street	ditto
Mallik, Sukumar	Clerk, Ford, Rhodes, Thornton & Co	Tower House	ditto
Mallik, Surendra Kumar	Chief Clerk and Cashier, Norwich Union Fire Insurance Society, Ld	8, Old Court House Street	ditto
Mallik, Uddhab Chandra	Assistant, Accountant-General's Office, Bengal	Treasury Buildings	ditto
Manchanda, Shanti Sarup, BA	Assistant, K C Thapar & Bros, Ld	5, Royal Exchange Place	ditto
Mandal, A P	Clerk, C O S Office, E I R	E I R House	ditto
Mandal, Ashutos, BA	Clerk, Surveyor's Department, Calcutta Corporation	Municipal Office	ditto
Mandal, Balai Lal	Assistant, Lionel Edwards, Ld	D-1, Clive Buildings	ditto
Mandal, Dharanidhar	Clerk, Shaw, Wallace & Co	4, Bankshall Street	ditto
Mandal, Guruprasad, MA	Assistant, Accountant-General's Office, Bengal	Treasury Buildings	ditto
Mandal, Nishikanta, BA	Inspector, Collection Department, Calcutta Corporation	Municipal Office	ditto
Mandal, Nityananda, BA	Assistant, Accountant-General's Office, Bengal	Treasury Buildings	ditto
Mandal, N N	Assistant, Oriental Govt Security Life Assurance Co, Ld	2, Clive Row	ditto

No.	Names.	Style or calling.	Residence or place of business.	Religion.
	Mandal, Panchanan	Assistant Headmaster, Mitra Institution	55, Harrison Road	Hindu
	Mandal, Prasad Gobinda	Assistant, Bengal Secretariat, Irrigation Department	Writers' Buildings	ditto
	Mandal, Priya Nath, BA	Assistant, Commercial Intelligence Deptt, India	1, Council House Street	ditto
	Mandal, Radhagobinda	Surveyor, Calcutta Improvement Trust	5, Clive Street	ditto
	Mandal, Raghu Nandan	Clerk, D A G P & T Office	7, Koilaghat Street	ditto
	Mandal, Satish Chandra, B com.	Clerk, D A G P & T Office	7, Koilaghat Street	ditto
	Mandanna, Kodandera Ganpathy	S A Superintendent, Drawing Branch, Surveyor-General's Office	13, Wood Street	ditto
	Manjhi, Jitendra Nath	Clerk, C E's Office, E I R	E I R House	ditto
	Manna, Batakrishna	Supervisor, Drainage, Calcutta Corporation	Municipal Office	ditto
	Manna, Chintamani	Assistant Teacher, Government School of Art	28, Chowringhee	ditto
	Mannan, Abdul, MA	Lecturer, Islamia College	8, Wellesley Street	Mahomedan
	Marar, M M N	Clerk, Prudential Assurance Co, Ld	Clive Buildings	Hindu
	Mariadas, Rajoo	Draftsman (Drawing), Survey of India	13, Wood Street	Christian
	Marick, Kanai Lal	Clerk, D A G P & T Office	7, Koilaghat Street	Hindu
	Marick, Prosad Das	Clerk, E B R	3, Koilaghat Street	ditto
	Marick, Ramendra Nath	Audit Clerk, E B R	3, Koilaghat Street	ditto
	Marker, Hormusji	Salesman, Callendar's Cable & Constn Co, Ld	2, Pollock Street	Zoroastrian
	Maschatak, Dhirendra Nath	Assistant, Begg, Dunlop & Co, Ld	2, Hare Street	Hindu
	Master, Nariman Fakirji	Accountant, Prudential Assurance Co, Ld	Clive Buildings	Zoroastrian

Masud, Mahomed	Assistant, Bengal Secretariat, Revenue Department	Writers' Buildings	Mahomedan
Mathuswami, S	Clerk, D A G P & T Office	7, Koilaghat Street	Hindu
Matilal, Baidyanath	Clerk, Lloyds Bank, Ld	101-1, Clive Street	ditto
Matthai, Parekh Oman	Head Clerk, Royal Asiatic Society of Bengal	1, Park Street	Christian
Maulik, Atul Chandra	S A Superintendent, Drawing Office, Survey of India	13, Wood Street	Hindu
Maulik, Sati Nath	Accountant, K C Thapar & Bros, Ld	5, Royal Exchange Place	ditto
Maulik, Sudhindra Chandra	Assistant, The Eastern Bank, Ld	9, Clive Street	ditto
Mehra, Badri Prasad	Clerk, Allahabad Bank, Ld	6, Royal Exchange Place	ditto
Mehra Dwarka Prasad	Clerk, Allahabad Bank, Ld	6, Royal Exchange Place	ditto
Mehra, Har Narayan (No. 1)	Clerk, Allahabad Bank, Ld	6, Royal Exchange Place	ditto
Mehra, Jagat Narayan Lal	Clerk, Allahabad Bank, Ld	6, Royal Exchange Place	ditto
Mehra, Shyam Sundar	Clerk, Allahabad Bank, Ld	6, Royal Exchange Place	ditto
Mehrotra, J P	Asstt Engineer, G E C (India), Ld	Magnet House, Central Avenue (South)	ditto
Mehta, D M	Offg Accountant, Central Bank of India, Ld	71, Cross Street	Zoroastrian
Mehta, N D, BA	Accountant, British India General Insurance, Co, Ld	Norton Buildings	ditto
Mehta, S S	Assistant, Imperial Chemical Industries (India), Ld	18, Strand Road	ditto
Menon, A G	Assistant, Guest, Keen, Williams, Ld	7, Council House Street	ditto
Meyer, Md Bux	General Manager, Meyer & Co	6-3, Lindsay Street	Mahomedan
Miah, Abdur Rob, MA	Assistant, Office of the I-G of Police	Writers' Buildings	ditto
Miah, A R	Assistant, Mackinnon, Mackenzie & Co	8, Strand Road	ditto
Miah, Md Abdur Rashid, BA	Assistant, Accountant-General's Office, Bengal	Treasury Buildings	ditto

No.	Name.	Style or calling.	Residence or place of business.	Religion.
	Miah, Tazuddin, BA	Clerk, D A G P & T Office	7, Koilaghat Street	Mahomedan
	Mirza, Begg Nazir	Accountant, C A O's Office, E I R	E I R House	ditto
	Misra, Haladhar	Clerk, Macmillan & Co, Ld	294, Bowbazar Street	Hindu
	Misra, Kamala Sankar, M Sc	Laboratory Assistant, Zoological Survey of India	Indian Museum	ditto
	Misra, Nanda Kishore	Clerk, C C M's Office, E I R	E I R House	ditto
	Misra, Natobar	Clerk, C A O's Office, E I R	E I R House	ditto
	Misra, Pramatha Nath, BA	Assistant, Surgeon-General's Office, Bengal	Writers' Buildings	ditto
	Misra, Shiva Mangal	Clerk, C A O's Office, E I R	E I R House	ditto
	Misra, Surendra Nath	Clerk, Surveyor-General's Office	13, Wood Street	ditto
	Mitra, Adhish Chandra, BA	Assistant, Reserve Bank of India	8, Council House Street	ditto
	Mitra, A K	Assistant, Stewart & Co, Ld	57, Park Street	ditto
	Mitra, Abani Kanta, BSc	Superintendent, Maharāja Cossimbazar Polytechnic Institute	1 & 3, Nandalal Bose Lane	ditto
	Mitra, Akshaya Kumar	Assistant, Octavius Steel & Co, Ld	14, Old Court House Street	ditto
	Mitra, Amala Charan, BSc	Clerk, D A G P & T Office	7, Koilaghat Street	ditto
	Mitra, Amar Nath	Assistant, J Thomas & Co	8, Mission Row	ditto
	Mitra, Amarendra Nath	Clerk, Cox & Kings (Agents), Ld	5, Bankshall Street	ditto
	Mitra, Amulya Chandra, BA	Accounts Clerk, E B R	3, Kaylaghat Street	ditto
	Mitra, Amulya Krishna	Clerk, D A G P & T Office	7, Koilaghat Street	ditto
	Mitra, Anath Nath	Assistant, Account Deptt, Calcutta Corporation	Municipal Office	ditto

Mitra, Anath Nath	Assistant, F W Heilgers & Co	1-1, Clive Street	ditto
Mitra, Anil Ch	Assistant, Grahams Trading Co (India), Ld	6, Lyons Range	ditto
Mitra, Apurba Krishna	Clerk, I G N & Ry Co, Ld	4, Fairlie Place	ditto
Mitra, Ashutosh	Head Clerk, Advtg. Deptt., Imperial Tobacco Co (India), Ld	37, Chowringhee	ditto
Mitra, Atindra Krishna	Clerk, C E S C, Ld	Victoria House	ditto
Mitra, Atindra Nath	Clerk, D A G P & T Office	7, Koilaghat Street	ditto
Mitra, Atul Krishna	Clerk, Ralli Brothers, Ld	16, Hare Street	ditto
Mitra, Baikuntha Nath	Assistant, Babcock & Wilcox, Ld	4, Bankshall Street	ditto
Mitra, Balai Chandra	Inspector, License Department, Calcutta Corporation	Municipal Office	ditto
Mitra, Bankim Chandra	Inspector, Collection Department, Calcutta Corporation	Municipal Office	ditto
Mitra, Basanta Kumar	Lecturer, Vidyasagar College	39, Sanker Ghose Lane	ditto
Mitra, Basanta Kumar	Head Clerk, North British & Mercantile Insurance Co, Ld	101-1, Clive Street	ditto
Mitra, B B	Assistant Bullion-keeper, Calcutta Mint	47, Strand Road	ditto
Mitra, Bhabataran, BA	Assistant, Central Stationery Office	3, Church Lane	ditto
Mitra, Bhibuti Bhusan	Court Clerk, C C M's Office, E I R	E I R House	ditto
Mitra, Bholanath	Assistant, Accountant-General's Office, Bengal	Treasury Buildings	ditto
Mitra, Bhuban Mohan	Assistant, Agriculture & Industries Department, Bengal	Writers' Buildings	ditto
Mitra, Bhupendra Nath	Clerk, C A's Office, E I R	E I R House	ditto
Mitra, Bhupendra Nath	Assistant, Babcock and Wilcox, Ld	4, Bankshall Street	ditto
Mitra, Bhupendra Nath	Sub-Head, Accounts Office, E B R	3, Kaylaghat Street	ditto

No.	Names.	Style or calling.	Residence or place of business.	Religion.
	Mitra, Bhupendra Nath	Clerk, D A G P & T Office	7, Koilaghat Street	Hindu
	Mitra, Bhupendra Nath	Examiner of Stores, Indian Stores Department (Inspection)	6, Esplanade, East	ditto
	Mitra, Bihari Lal	Assistant, Accountant-General's Office, Bengal	Treasury Buildings	ditto
	Mitra, Bihari Lall	Assistant, Mercantile Marine Department	15-1, Strand Road	ditto
	Mitra, Bijayendra Nath	Inspector of Smoke Nuisances, Bengal	3, Charnock Place	ditto
	Mitra, Bijaymadhab, B COM (Edin)	Examiner of Accounts, I T Office	3, Government Place, West	ditto
	Mitra, Billeswar, LMS	Sanitary Officer, Calcutta Corporation	79, Cownwallis Street	ditto
	Mitra, Binode Bihari	Clerk, D A G P & T Office	7, Koilaghat Street	ditto
	Mitra, Birendra Krishna	Clerk, D A G P & T Office	7, Koilaghat Street	ditto
	Mitra, Bishnu Charan	Assistant, Indian Stores Department (Inspection)	6, Esplanade, East	ditto
	Mitra, Bishwanath, MA	Assistant, Accountant-General's Office, Bengal	Treasury Buildings	ditto
	Mitra, Bivash Chandra	Reference Clerk, P H D, Bengal	3, Charnock Place	ditto
	Mitra, Braja Gopal, MSc	Professor, Bangabasi College	25-1, Scott Lane	ditto
	Mitra, Brindaban Chandra, MA	Assistant, Ford, Rhodes, Thornton & Co	Tower House, Chowringhee Square	ditto
	Mitra, Brisavasan	Asstt. Estate Superintendent, Port Commissioners' Office	Strand Road	ditto
	Mitra, C C	Clerk, Accounts Office, Calcutta Mint	47, Strand Road	ditto
	Mitra, Debendra Nath	Clerk, Marine Deptt, South British Insurance Co, Ld	5, Clive Street	ditto
	Mitra, Debi P	Clerk, Port Commissioners	Strand Road	ditto
	Mitra, Dhirendra Kumar	Clerk, C A O's Office, E I R	E I R House	ditto

Mitra, Dhirendra Nath	Assistant, Accountant-General's Office, Bengal	Treasury Buildings	ditto
Mitra, Durga Charan	Clerk, Burmah Shell Co of India, Ld	Hongkong House	ditto
Mitra, Gajendra Bhusan	Stenographer, North British & Mercantile Insurance Co, Ld	101-1, Clive Street	ditto
Mitra, Ganesh Chandra	Sub-Inspector, License Department, Calcutta Corporation	Municipal Office	ditto
Mitra, Gopi Krishna	Asst Engineer, Bengal Telephone Corporation, Ld	146, Chittaranjan Avenue	ditto
Mitra, Gour Kishore	Chief Clerk, P & O Banking Corporation, Ld	1, Fairlie Place	ditto
Mitra, Gouri Das	Clerk, D A G, P & T Office	7, Koilaghat Street	ditto
Mitra, Gunendra Krishna	Clerk, C A O's Office, E I R	E I R House	ditto
Mitra, Haraparbati Kumar, MSc	Stock Verifier, Accounts Department, Calcutta Corporation	Municipal Office	ditto
Mitra, Haridas, BSc	Assistant, Bengal Secretariat, Commerce Department	Writers' Buildings	ditto
Mitra, Haripada	Clerk, Royal Insurance Co, Ld	26 &27, Dalhousie Square	ditto
Mitra, Haripada	Assistant, Accounts Department, Calcutta Corporation	Municipal Office	ditto
Mitra, Haripada	Clerk, Central Stationery Office	3, Church Lane	ditto
Mitra, H C	Assistant Bullion-keeper, Calcutta Mint	47, Strand Road	ditto
Mitra, H C	Assistant, Shaw, Wallace & Co	4, Bankshall Street	ditto
Mitra, Hem Chandra	Clerk Shaw, Wallace & Co	4, Bankshall Street	ditto
Mitra, Janendra Nath	Clerk, C O S Office, E I R	E I R House	ditto
Mitra, Jatindra Nath, MA	Head Objection Clerk, Assessor's Department, Calcutta Corporation	Municipal Office	ditto
Mitra, Jatindra Nath, I	Clerk, I G N & Ry Co, Ld	4, Fairlie Place	ditto
Mitra, Jatindra Nath, II	Clerk, I G N & Ry Co, Ld	4, Fairlie Place	ditto

No.	Names.	Style or calling.	Residence or place of business.	Religion.
	Mitra, J K	Clerk, Mackinnon Mackenzie & Co	16, Strand Road	Hindu
	Mitra, J N	Broker, Queensland Insurance Co, Ld	6, Royal Exchange Place	ditto
	Mitra, Jyotis Chandra	Accountant, American Express Co, Inc	14, Government Place, East	ditto
	Mitra, Jyotis Chandra	Stenographer, C M E's Office, E I R	E I R House	ditto
	Mitra, Kalicharan	Stenographer, Imperial Chemical Industries (India), Ld	18, Strand Road	ditto
	Mitra, Kali Das	Overseer, District No II, Calcutta Corporation	22, Mirzapore Street	ditto
	Mitra, Kali Kinkar	Assistant, Office of the Inspector-General of Prisons, Bengal	Writers' Buildings	ditto
	Mitra, Kali Krishna	Clerk, Collector's Deptt., Calcutta Corporation	Municipal Office	ditto
	Mitra, Kali Mohan	Clerk, D A G, P & T Office	7, Koilaghat Street	ditto
	Mitra, Kalipada, II	Clerk, Telegraph Check Office	33, Dalhousie Square, South	ditto
	Mitra, Kanailal	Clerk, Jardine Skinner & Co	4, Clive Row	ditto
	Mitra, Kanti Chandra	Head Clerk, Improvement Trust Tribunal	6, Hastings Street	ditto
	Mitra, Kedar Nath, BSc	Assistant, Accountant-General's Office, Bengal	Treasury Buildings	ditto
	Mitra, Keshab Chandra	Assistant, Martin & Co	12, Mission Row	ditto
	Mitra, Khagendra Nath, BA	Assistant, Accountant-General's Office, Bengal	Treasury Buildings	ditto
	Mitra, Khagendra Nath	Clerk, D A G, P & T Office	7, Koilaghat Street	ditto
	Mitra, Kiran Chandra	Assistant, Bengal Secretariat, Appointment Department	Writers' Buildings	ditto
	Mitra, Kiran Chandra	Accountant, Civil Veterinary Department, Bengal	Writers' Buildings	ditto
	Mitra, Lalit Mohan	Assistant, Bengal Secretariat, L S-G Department	Writers' Buildings	ditto

Mitra, Lalit Mohan	Clerk, Shaw, Wallace & Co	4, Bankshall Street	ditto
Mitra, Lal Mohan	Clerk, Union Insurance Society of Canton, Ld	8, Clive Street	ditto
Mitra, Madan Gopal	Works Manager, Lal Chand & Sons	76, Lower Circular Road	ditto
Mitra, Makhan Chandra	Clerk, Imperial Bank of India	3, Strand Road	ditto
Mitra, Makhan Lal	Assistant, Income-Tax Office	3, Government Place, West	ditto
Mitra, Manilal, BSc	Eng Overseer, Calcutta Corporation	Hogg Street	ditto
Mitra, Manmatha Nath	Clerk, Lloyds Bank, Ld	101-1, Clive Street	ditto
Mitra, Manmatha Nath	Clerk, D A G, P & T Office	7, Koilaghat Street	ditto
Mitra, M N	Clerk, John Dewar & Sons, Ld	12, Hare Street	ditto
Mitra, N	Assistant Inspector, C E S C, Ld	Victoria House	ditto
Mitra, Nanda Lal	Assistant, Reserve Bank of India	8, Council House Street	ditto
Mitra, Nani Gopal	Assistant, Babcock & Wilcox, Ld	4, Bankshall Street	ditto
Mitra, Narendra Nath, MA	Assessing Inspector, Calcutta Corporation	Municipal Office	ditto
Mitra, Narendra Nath	Ledger-keeper, Place, Siddons & Gough	6, Lyons Range	ditto
Mitra, Narendra Nath	Clerk, Imperial Bank of India	3, Strand Road	ditto
Mitra, Narendra Nath, BSc	Assistant, Agriculture and Industries Department, Bengal	Writers' Buildings	ditto
Mitra, Narendra Nath	Partner, Mitra Brothers	98, Clive Street	ditto
Mitra, Nirad Charan	Librarian, Bengal Secretariat Library	Writers' Buildings	ditto
Mitra, Niranjan Ch	Food Inspector, Calcutta Corporation	79, Cornwallis Street	ditto
Mitra, Nripendra Nath	Clerk, E B R Traffic Deptt	3, Koilaghat Street	ditto

No.	Names.	Style or calling.	Residence or place of business.	Religion.
	Mitra, Panchanan	Assistant, Davenport & Co, Ld	6, Church Lane	Hindu
	Mitra, Pannalal	Clerk, D A G, P & T Office	7, Koilaghat Street	ditto
	Mitra, Paran Chandra	Clerk, C A O's Office, E I R	E I R House	ditto
	Mitra, Paresh Nath	Assistant, J Thomas & Co	8, Mission Row	ditto
	Mitra, P K	Special Inspector, Traffic Deptt, E B R	3, Koilaghat Street	ditto
	Mitra, Prabodh Kumar	Clerk, Calcutta Improvement Trust	5, Clive Street	ditto
	Mitra, Prafulla Chandra, BSC, GDA	Examiner of Accounts, Income-Tax Office	3, Government Place, West	ditto
	Mitra, Prafulla Chandra	Assistant, Accountant-General's Office, Bengal	Treasury Buildings	ditto
	Mitra, Prafulla Kumar, MA, BT	Assistant Master, Bethune Collegiate School	181, Cornwallis Street	ditto
	Mitra, Prakash Chandra, MA	Assistant, A-G's Office, Bengal	Treasury Buildings	ditto
	Mitra, Prakash Chandra, BA	Clerk, S S Hogg Market, Calcutta Corporation	Hogg Market	ditto
	Mitra, Pramatha Nath	Clerk, D A G, P & T Office	7, Koilaghat Street	ditto
	Mitra, Prankrishna	Assistant, Mackinnon, Mackenzie & Co	16. Strand Road	ditto
	Mitra, Prankumar	Assistant, Bengal Chamber of Commerce	2, Clive Street	ditto
	Mitra, Pratul Chandra	Assistant, Accountant-General's Office, Bengal	Treasury Buildings	ditto
	Mitra, Pravas Chandra	Surveyor, Calcutta Improvement Trust	5, Clive Street	ditto
	Mitra, Pravas Chandra, BA	Assistant, Bengal Secretariat, Police Department	Writers' Buildings	ditto
	Mitra, Pulin Krishna, MA	Assistant, Commercial Intelligence Dept, India	1, Council House Street	ditto
	Mitra, Rabindra Krishna	Clerk, Imperial Bank of India	3, Strand Road	ditto
	Mitra, Radha Shyam	Assistant, Senda & Co (India), Ld	135, Canning Street	ditto

Mitra, R K	2nd Asstt Cashier, The P & O Banking Corpn, Ld	1, Fairlie Place	ditto
Mitra, Rajani Kanta	Staff Assistant, Imperial Bank of India	3, Strand Road	ditto
Mitra, Rajendra Krishna	Cashier, Volkart Brothers	11, Clive Street	ditto
Mitra, Rajendra Lal	Clerk, Shaw, Wallace & Co	4, Bankshall Street	ditto
Mitra, Rajendra Nath	Clerk, Telegraph Check Office	33, Dalhousie Square, South	ditto
Mitra, Rajendra Nath	Offg. Accountant, Punjab National Bank, Ld	135-36, Canning Street	ditto
Mitra, Rakhal Das, BSc, BT	Assistant Master, Hindu School	College Square	ditto
Mitra, Rakhal Das	Stenographer, C O P S Office, E I R	E I R House	ditto
Mitra, Ramapada	Clerk, Calcutta Improvement Trust	5, Clive Street	ditto
Mitra, Ramesh Chandra	Clerk, Lloyds Bank, Ld	101-1, Clive Street	ditto
Mitra, Ramesh Chandra	Clerk, Imperial Bank of India	3, Strand Road	ditto
Mitra, Ramtarak	Overseer, Engineering Department, Port Commissioners' Office	Strand Road	ditto
Mitra, Rasbihari	Clerk, Gillanders, Arbuthnot & Co	8, Clive Street	ditto
Mitra, Ripon Chandra, BA	Inspector, Collection Deptt, Calcutta Corporation	Municipal Office	ditto
Mitra, Rishendra Krishna	Assistant Teacher, Government School of Art	28, Chowringhee	ditto
Mitra, S C	Clerk, Heatley & Gresham, Ld	6, Waterloo Street	ditto
Mitra, Sanat Kumar	Sales Clerk, Lipton, Ld	9, Weston Street	ditto
Mitra, Sarada Chandra	Overseer, Calcutta Improvement Trust	5, Clive Street	ditto
Mitra, Sarashi Bhusan	Accountant, Automobile Association of Bengal	40, Chowringhee	ditto
Mitra, Satish Chandra	Assistant, Bengal Secretariat Record Room	Writers' Buildings	ditto

No.	Names	Style or calling.	Residence or place of business.	Religion.
	Mitra, Satish Chandra	Assistant, Martin & Co	12, Mission Row	Hindu
	Mitra, Satish Chandra	Clerk, Central Stationery Office	3, Church Lane	ditto
	Mitra, Satyacharan	Clerk, Grindlay & Co, Ld	6, Church Lane	ditto
	Mitra, Satya Prasad	Accountant, Reuters Ld	7, Hare Street	ditto
	Mitra, Satyendra Nath	Assistant, Commercial Intelligence Department, India	1, Council House Street	ditto
	Mitra, Satyendra Nath	Assistant, Accounts Dept, Calcutta Corporation	Municipal Office	ditto
	Mitra, Satyendra Nath, BSc	Analyst, Calcutta Corporation	Municipal Office	ditto
	Mitra, Shachindra Nath	Assistant, The Eastern Bank, Ld	9, Clive Street	ditto
	Mitra, Shachindra Nath	Assistant, Imperial Library	6, Esplanade, East	ditto
	Mitra, Shaila Bhusan	Clerk, D A G, P & T Office	7, Koilaghat Street	ditto
	Mitra, Shaila Kumar	Eng Supervisor, Calcutta Corporation, District III	Hogg Street	ditto
	Mitra, Shailendra Lal	Demonstrator, Presidency College	86-1, College Street	ditto
	Mitra, Shailendra Nath	Clerk, C A O's Office, E I R	E I R House	ditto
	Mitra, Shyama Charan, MA	Assessor, Income-tax Office	3, Government Place, West	ditto
	Mitra, S K	Accountant, Y M C A	25, Chowringhee	ditto
	Mitra, S K	Assistant, Balmer, Lawrie & Co, Ld	103, Clive Street	ditto
	Mitra, S L	Stenographer, Y M C A	25, Chowringhee	ditto
	Mitra, Subhendra Kumar, MSc	Assistant, A-G's Office, Bengal	Treasury Buildings	ditto
	Mitra, Subodh Chandra	Assistant, Imperial Chemical Industries (India), Ld	18, Strand Road	ditto
	Mitra, Sudhir Chandra	Clerk, D A G, P & T Office	7, Koilaghat Street	ditto

Mitra, Sudhir Chandra	Clerk, Collector's Deptt, Calcutta Corporation	Municipal Office	ditto
Mitra, Sudhir Kumar	Examiner of Stores, Indian Stores Department (Inspection)	6, Esplanade, East	ditto
Mitra, Sudhish Chandra, MA	Assistant Superintendent, Office of the Controller of Currency	Treasury Buildings	ditto
Mitra, Sunil Kumar	Stenographer, Bengal Secretariat, Finance Deptt	Writers' Buildings	ditto
Mitra, Surendra Kumar	Clerk, Jardine Skinner & Co	4, Clive Row	ditto
Mitra, Surendra Nath	Security Clerk, National Bank of India, Ld	104, Clive Street	ditto
Mitra, Tincouri	Clerk, I G N & Ry Co, Ld	4, Fairlie Place	ditto
Mitra, Upendra Nath	Sub-Head, Accounts Deptt, E B R	3, Koilaghat Street	ditto
Mody, Harmusji Shapurji	Assistant, Construction Engineer, C E S C, Ld	Victoria House	Zoroastrian
Mody, J R K	Manager, R K Mody	23, Canning Street	ditto
Mohan, Tanjore Nataranjan	Accountant, K C Thapar & Bros, Ld	5, Royal Exchange Place	ditto
Mohit, S A	Food Inspector, Calcutta Corporation	22, Mirzapore Street	Mahomedan
Molla, M Khatib (Maulvi)	Assistant, Bengal Secretariat, L S-G Department	Writers' Buildings	ditto
Molla, Nafar Ali	Clerk, D A G, P & T Office	7, Koilaghat Street	ditto
Monga, Shadi Ram	Works Manager, Lalchand & Sons	76, Lower Circular Road	Hindu
Moujud, Maulvi Kazi Abdul, MA	Assistant, Bengal Secretariat, Judicial Department	Writers' Buildings	Mahomedan
Mukharji, A	Assistant Accountant, Manufacturers Life Insurance Co	27, Dalhousie Square	Hindu
Mukharji, Abani Bhusan	Clerk, Cox & Kings (Agents), Ld	5, Bankshall Street	ditto
Mukharji, Abani Kumar	Assistant, Calcutta University	Senate House	ditto
Mukharji, Abani M	Clerk, Calcutta Improvement Trust	5, Clive Street	ditto
Mukharji, Abhayapada	Clerk, Audit Office, E I R	E I R House	ditto

No.	Names.	Style or calling.	Residence or place of business.	Religion
	Mukharji, A C	Assistant, Barry & Co	2, Fairlie Place	Hindu
	Mukharji, Akshaya Kumar, B Sc	Clerk, D A G, P & T Office	7, Koilaghat Street	ditto
	Mukharji, Akshaya Kumar	Assistant, A-G's Office, Bengal	Treasury Buildings	ditto
	Mukharji, Amal Kumar, BSc	Assistant, Martin & Co	12, Mission Row	ditto
	Mukharji, Amarendra Kumar	Clerk, C A O's Office, E I R	E I R House	ditto
	Mukharji, Amarendra Mohan, BA	Examiner of Accounts, Income-tax Office	3, Government Place, West	ditto
	Mukharji, Amarendra Nath, BSc	Clerk, D A G, P & T Office	7, Koilaghat Street	ditto
	Mukharji, Amulya Charan	Electrical Sub-Overseer, Western Electrical Division, P W D	Writers' Buildings	ditto
	Mukharji, Amulya Kumar	Head Clerk, Alfred Herbert (India), Ld	13-3, Strand Road	ditto
	Mukharji, Amulya Ratan	Clerk, D A G, P & T Office	7, Koilaghat Street	ditto
	Mukharji, Anadi	Publicity Officer, Office of the Director of Industries, Bengal	40-1A, Free School Street	ditto
	Mukharji, Ananda Lal	Assistant, Senda & Co (India), Ld	135, Canning Street	ditto
	Mukharji, Ananta Kumar, BA	2nd Head Assistant, Bengal Secretariat, Finance Department	Writers' Buildings	ditto
	Mukharji, Anath Nath	Proprietor, Calcutta Publicity Service	65-2A, Raja Raj Ballav Street	ditto
	Mukharji, Anath Nath	Accounts Clerk, E B R	3, Koilaghat Street	ditto
	Mukharji, Anil Chandra	Assistant, Office of the Director of Public Health, Bengal	Writers' Buildings	ditto
	Muhharji, Anil Krishna	Clerk, Agent's Office, E I R	E I R House	ditto
	Mukharji, Anukul Chandra	Assistant, A-G's Office, Bengal	Treasury Buildings	ditto
	Mukharji, Apar Nath	Ledger-keeper, Geo Henderson & Co, Ld	101-1, Clive Street	ditto
	Mukharji, Apurba Chandra, BSc	Assistant, Bengal Secretariat, Commerce Department	Writers' Buildings	ditto

Mukharji, Ardhendu Bhusan	Surveyor and Estimator, Calcutta Corporation	Municipal Office	ditto
Mukharji, Ardhendu Sekhar, BA	Clerk, Assessor's Department, Calcutta Corporation	Municipal Office	ditto
Mukharji, Arun Prakash	Ledger Keeper, John Dickinson & Co. Ld	Grosvenor House	ditto
Mukharji, Arun Prakash	Assistant, Calcutta University	Senate House	ditto
Mukharji, Ashitaranjan	Overseer, Ex Engineer's Office, Dredger Division	3, Charnock Place	ditto
Mukharji, Ashutos	Assistant, James Finlay & Co, Ld	1, Clive Street	ditto
Mukharji, Ashutos	Accounts Clerk, E B R	3, Koilaghat Street	ditto
Mukharji, Ashutos	Clerk, Agency Department, E B R	3, Koilaghat Street	ditto
Mukharji, A T	Assistant, Agency Dept, Grahams Trading Co (India), Ld	6, Lyons Range	ditto
Mukharji, Aswini Kumar	Auditor, George Read & Co	Avenue House, Chowringhee Square	ditto
Mukharji Atindra Nath	Head Estimator, Office of the Superintending Engineer, Central Circle, P W D.	Writers' Buildings	ditto
Mukharji, Atul Chandra	Assistant, Macneill & Co	2, Fairlie Place	ditto
Mukharji, Bagalapada	Clerk, C A O's Office, E I R	E I R House	ditto
Mukharji, Balai Chand, BA	Assistant, Accountant-General's Office, Bengal	Treasury Buildings	ditto
Mukharji, Balai Chandra, BA	Stenographer, Union Insurance Society of Canton, Ld	8, Clive Street	ditto
Mukharji, Balaram	Clerk, Burmah Shell Co of India, Ld	Hongkong House	ditto
Mukharji, Bankim Bihari	Assistant, Price, Waterhouse, Peat & Co	B-4, Clive Buildings	ditto
Mukharji, Bankim Bihari	Cashier, American Express Co, Inc	14, Government Place, East	ditto
Mukharji, Bankim Ch	Overseer, Calcutta Improvement Trust	5, Clive Street	ditto
Mukharji, Bankim Chandra	Clerk, Burmah Shell Co of India, Ld	Hongkong House	ditto

No.	Names.	Style or calling.	Residence or place of business.	Religion
	Mukharji, B B	Clerk, Calcutta Mint	47, Strand Road	Hindu
	Mukharji, Becharam	Assistant Engineer, J C Banerjee, Ld	20, Strand Road	ditto
	Mukharji, Bhabananda	Accounts Clerk, E B R	3, Koilaghat Street	ditto
	Mukharji, Bhola Nath, B A	Clerk, Telegraph Check Office	33, Dalhousie Square South	ditto
	Mukharji, Bhuban Mohan	Clerk, Imperial Bank of India	3, Strand Road	ditto
	Mukharji, Bhuban Mohan	Head Clerk, North British & Mercantile Insurance Co, Ld	101-1, Clive Street	ditto
	Mukherji, Bhudeb, BL	Assessor, Income-tax Office	3, Government Place, West	
	Mukharji, Bhupendra Kumar	Superintendent, Agent's Office, E B R	3, Koilaghat Street	ditto
	Mukharji, Bhupendra Nath	Assistant, Office of the Inspector-General of Registration, Bengal.	Writers' Buildings	ditto
	Mukharji, Bhupendra Nath	Assistant, Bengal Secretariat, Political Department	Writers' Buildings	ditto
	Mukharji, Bhutnath	Assistant, A-G's Office, Bengal	Treasury Buildings	ditto
	Mukharji, Bibhuti Bhusan	Clerk, Burmah Shell Co of India, Ld	Hongkong House	ditto
	Mukharji, Bibhuti Bhusan	Assistant, Price, Waterhouse, Peat & Co	B-4, Clive Buildings	ditto
	Mukharji, Bibhutibhusan	Assistant Cashier, Macneill & Co	2, Fairlie Place	ditto
	Mukharji, Bibhutibhusan	Clerk, Traffic Deptt, E B R	3, Koilaghat Street	ditto
	Mukharji, Bibhuti Bhusan, BA	Assistant, Accountant-General's Office, Bengal	Treasury Buildings	ditto
	Mukharji, Bibhutibhusan, BA	Clerk, Agent's Office, E B R	3, Koilaghat Street	ditto
	Mukharji, Bijali Bhusan, BSC	Clerk, D A G, P & T Office	7, Koilaghat Street	ditto
	Mukharji, Bijan Lal	Overseer, Royal Calcutta Turf Club	11, Russel Street	ditto
	Mukharji, Bijaya Gopal	Head Clerk, Stores Department, E B R	3, Koilaghat Street	ditto

Mukharji, Bijaya Krishna	Assistant, Martin & Co	12, Mission Row	ditto
Mukharji, Bijaya Kumar	Clerk, C A O's Office, E I R	E I R Office	ditto
Mukharji, Bimal Chandra	Assistant, Accountant-General's Office, Bengal	Treasury Buildings	ditto
Mukharji, Binaya Krishna	Sub-Inspector of Schools, Calcutta	40-1A, Free School Street	ditto
Mukharji, Binayak Chandra	Assistant, Bengal Secretariat, Finance Department	Writers' Buildings	ditto
Mukharji, Binode Bhusan, BA	Assistant, Accountant-General's Office, Bengal	Treasury Buildings	ditto
Mukharji, Bishnu Charan	Surveyor, Port Commissioners' Office	Strand Road	ditto
Mukharji, B N	Assistant, Salesman, Marshal Sons & Co (India), Ld	99, Clive Street	ditto
Mukharji, Bon Bihari	Sub-Head, Accounts Department, E B R	3, Kaylaghat Street	ditto
Mukharji, Brajabihari	Clerk, Calcutta Improvement Trust	5, Clive Street	ditto
Mukharji, Brajendra Nath	Assistant, Office of the Inspector-General of Registration, Bengal	Writers' Buildings	ditto
Mukharji, Brindaban Chandra	Assistant. Imperial Bank of India	3. Strand Road	ditto
Mukherji, Brindaban Ch, DSc	Demonstrator, Ripon College	24, Harrison Road	ditto
Mukharji, Chandi Charan	Assistant, Lionel Edwards, Ld	D-1, Clive Buildings	ditto
Mukharji, Chandi Charan	Salesman, Roneo, Ld	32-1, Dalhousie Square	ditto
Mukharji, Dasharathi	Assistant, Office of the Director of Industries, Bengal	40-1A, Free School Street	ditto
Mukharji, Debendra Nath	Clerk, Burmah Shell Co of India, Ld	Hongkong House	ditto
Mukharji, Debendra Nath (I) BSc	Clerk, D A G P & T Office	7, Kaylaghat Street	ditto
Mukharji, Debendra Nath, BA	Assistant, Accountant-General's Office, Bengal	Treasury Buildings	ditto
Mukharji, Dev Das	Clerk, C A's Office, E I R	E I R House	ditto
Mukharji, Dev Dev, MSc	Technical Assistant, Zoological Survey of India	Indian Museum	ditto

No.	Names.	Style or calling	Residence or place of business.	Religion.
	Mukharji, Dhirendra Chandra	Assistant, Office of the Inspector-General of Prisons, Bengal	Writers' Buildings	Hindu
	Mukharji, Dhirendra Krishna	Professor, Bangabasi College	25-1, Scott Lane	ditto
	Mukharji, Dhirendra Kumar	Assistant, Macneill & Co	2, Fairlie Place	ditto
	Mukharji, Dhirendra Nath	Clerk, Burmah Shell Co of India, Ld	Hongkong House	ditto
	Mukharji, Dhirendra Nath	Assistant, Calcutta University	Senate House	ditto
	Mukharji, Dhirendra Nath	Assistant, Accounts Department, Calcutta Corporation	Municipal Office	ditto
	Mukharji, Dhirendra Nath	Shorthand Typist, Presidency College	86-1, College Street	ditto
	Mukharji, Dhirendra Nath	Clerk, C A's Office, E I R	E I R House	ditto
	Mukharji, Durga Charan, BA	Assistant, Controller's Office, Calcutta University	Senate House	ditto
	Mukharji, Durgadas, B Sc	Assistant, Accountant-General's Office, Bengal	Treasury Buildings	ditto
	Mukharji, Durgapada	Accountant, Robert Kearsley & Co	11, Clive Street	ditto
	Mukharji, Durgapada	Estimator, Office of Superintending Engineer, P W D, Central Circle	Writers' Buildings	ditto
	Mukharji, Durgapada	Clerk, Burmah Shell Co of India, Ld	Hongkong House	ditto
	Mukharji, Dwarka Nath, MSc	Professor, Vidyasagar College	39, Shankar Ghose Lane	ditto
	Mukharji, Fani Bhusan	Clerk, D A G P & T Office	7, Kaylaghat Street	ditto
	Mukharji, Ganendra Bhusan	Assistant (Photo Litho), Survey of India	14, Wood Street	ditto
	Mukharji, Girija Sankar	Clerk, C C M's Office, E I R	E I R House	ditto
	Mukharji, Gobinda Chandra	Assistant, Accountant-General's Office, Bengal	Treasury Buildings	ditto
	Mukharji, Gobinda Prasad	Accountant, Geological Survey of India	27, Chowringhee	ditto

Mukharji, Gokulananda	Assistant, Office of the Geological Survey of India	27, Chowringhee		ditto
Mukharji, Gopal Chandra, BA	Clerk, D A G P & T Office	7, Koilaghat Street		ditto
Mukharji, Gopal Chandra	Clerk, Turner, Morrison & Co, Ld	6, Lyons Range		ditto
Mukharji, Gopeshwar	Clerk, C O P S's Office, E I R	E I R House		ditto
Mukharji, Gopeshwar	Assistant, Office of the Superintending Engineer, Presidency Circle P W D	Writers' Buildings		ditto
Mukharji, Haradeb	Clerk, Grindlay & Co, Ld	6, Church Lane		ditto
Mukharji, Haradhan	Assistant Calcutta Improvement Trust	5, Clive Street		ditto
Mukharji, Haradhan, B Com	Passed Accounts Clerk, Workshops Electrical Division	Writers' Buildings		ditto
Mukharji, Haradhan, BSc	Assistant Analyst, Bengal Public Health Laboratory	Chittaranjan Avenue		ditto
Mukharji, Haran Chandra	Publicity Officer, Bengal Co-operative Organisation Journal	102-1, Clive Street		ditto
Mukharji, Haraprasad	Assistant, Bengal Secretariat, Revenue Department	Writers' Buildings		ditto
Mukharji, Harendra Bhusan	Clerk, C M E's Office, E I R	E I R House		ditto
Mukharji, Harendra Nath	Stenographer, Reed, Ward & Co	6, Lyons Range		ditto
Mukharji, Harendra Nath	Sanitary Officer, Calcutta Corporation	79, Cornwallis Street		ditto
Mukharji, Harendra Nath	Assistant, Bengal Telephone Corporation, Ld	8, Hare Street		ditto
Mukharji, Hari Charan	Assistant, Holmes, Wilson & Co, Ld	Norton Buildings		ditto
Mukharji, Hari Charan	Assistant Teacher, Government School of Art	28, Chowringhee		ditto
Mukharji, Haridas	Demonstrator, Presidency College	86-1, College Street		ditto
Mukharji, Haridas	Clerk, D A G P & T Office	7, Koilaghat Street		ditto
Mukharji, Haridas	Assistant, Office of the I G of Police	Writers' Buildings		ditto
Mukharji, Haridhan	Clerk, Shaw, Wallace & Co	4, Bankshall Street		ditto
Mukharji, Harigopal, BA	Clerk, Bill Department, Calcutta Corporation	Municipal Office		ditto
Mukharji, Haribar	Clerk, Lloyds Bank, Ld	101-1, Clive Street		ditto
Mukharji, Hari Mohan	Assistant, Bengal Secretariat, Finance Department	Writers' Buildings		ditto

No.	Names.	Style or calling.	Residence or place of business.	Religion.
	Mukharji, Hari Mohan	Assistant, Macneill & Co	2, Fairlie Place	Hindu
	Mukharji, Hari Nath	Clerk, D A G P & T Office	7, Koilaghat Street	ditto
	Mukharji, Haripada, BA	Assistant, Reserve Bank of India	8, Council House Street	ditto
	Mukharji, Hariprosad	Head Assistant, Civil Veterinary Deptt, Bengal	Writers' Buildings	ditto
	Mukharji, Hari Shankar	Clerk, Shaw, Wallace & Co	4, Bankshall Street	ditto
	Mukharji, Harish Chandra	Assistant, Accountant-General's Office, Bengal	Treasury Buildings	ditto
	Mukharji, Hem Chandra	Assistant, Accountant-General's Office, Bengal	Treasury Buildings	ditto
	Mukharji, Hem Chandra	Clerk, Agent's Office, E I R	E I R House	ditto
	Mukharji, Hemendra Chandra, MA	Lecturer, City College	102-1, Amherst Street	ditto
	Mukharji, Heramba Nath	Accountant, Executive Engineer's Office, City Division, P W D	Writers' Buildings	ditto
	Mukharji, Himangshu Kumar	Assistant, Controller's Office, Calcutta University	Senate House	ditto
	Mukharji, Hiranmay	Assistant, Accountant-General's Office, Bengal	Treasury Buildings	ditto
	Mukharji, H P	Assistant, Barry & Co	2, Fairlie Place	ditto
	Mukharji, Hridaya Mohan	Assistant, Mackinnon, Mackenzie & Co	16, Strand Road	ditto
	Mukharji, I C	Assistant, Barry & Co	2, Fairlie Place	ditto
	Mukharji, Indu Bhusan, MSc	Lecturer, Calcutta Technical School	110, Surendra Nath Banerjee Road	ditto
	Mukharji, Indu Bhusan	Clerk, Imperial Bank of India	3, Strand Road	ditto
	Mukharji, Indu Bh	Clerk, Telegraph Check Office	33, Dalhousie Square, South	ditto
	Mukharji, Jagadindu Bhusan, BSc	Examiner of Stores, Indian Stores Deptt	6, Esplanade East	ditto
	Mukharji, Jagannath	Clerk, Telegraph Check Office	33, Dalhousie Square, (South)	ditto
	Mukharji, Janaki Kumar	Clerk, Engineer's Office, E B R	3, Kaylaghat Street	ditto

Mukharji, Jatadhari ..	Assistant, Calcutta Improvement Trust	5, Clive Street	ditto
Mukharji, Jatindra Kumar	Assistant Superintendent, Agency Department, E B R	3, Kaylaghat Street	ditto
Mukharji, Jatindra Mohan	Salesman, C C Wakefield & Co, Ld	7, Royal Exchange Place ..	Christian
Mukharji, Jatindra Nath, BA	Assistant, Bengal Secretariat, Judicial Department ..	Writers' Buildings	Hindu
Mukharji, Jatindra Nath	Stenographer, Bengal Secretariat, Finance Department	Writers' Buildings	ditto
Mukharji, Jatindra Nath, I	Clerk, D A G P & T Office	7, Koilaghat Street	ditto
Mukharji, Jatindra Nath, II	Clerk, D A G P & T Office	7, Koilaghat Street	ditto
Mukharji, Jatindra Nath	Clerk, Shaw, Wallace & Co ..	4, Bankshall Street	ditto
Mukharji, Jatindra Nath	Clerk, Gillanders, Arbuthnot & Co	8, Clive Street	ditto
Mukharji, Jatindra Nath, BA	Assistant, Bengal Secretariat, Irrigation Department	Writers' Buildings	ditto
Mukharji, Jatindra Nath	Clerk, Lloyds Bank, Ld	101-1, Clive Street	ditto
Mukharji, Jatindra Nath, II	Clerk, Telegraph Check Office	33, Dalhousie Square, South ..	ditto
Mukharji, Jaya Krishna ..	Clerk, Turner, Morrison & Co, Ld	6, Lyons Range	ditto
Mukharji, Jibananda ..	Assistant, Agriculture and Industries Department, Bengal	Writers' Buildngs	ditto
Mukharji, Jibandhone ..	Stenographer, Burmah Shell Co of India, Ld ..	Hongkong House	ditto
Mukharji, Jiban Krishna	Accounts Clerk, E B R	3. Koilaghat Street	ditto
Mukharji, Jitendra Lal	Clerk, D A G P & T Office	7, Koilaghat Street	ditto
Mukharji, Jitendra Nath	Cashier, Improvement Trust Tribunal	6, Hastings Street	ditto

No.	Names.	Style or calling.	Residence or place of business.	Religion.
	Mukharji, Jitendra Nath, BL	Assistant Master, Hindu School	College Square	Hindu
	Mukharji, Jitendra Nath	Assistant, Accounts Department, Calcutta Corporation	Municipal Office	ditto
	Mukharji, Jitendra Nath, BA	Assistant, Office of the Inspector-General of Police	Writers' Buildings	ditto
	Mukharji, Jitendra Nath	Assistant, Continental Commercial Co	14-2, Old China Bazar Street	ditto
	Mukharji, J N	Assistant, Barry & Co	2, Fairlie Place	ditto
	Mukharji, J N	Clerk, C E S C, Ld	Victoria House	ditto
	Mukharji, Jnanoda Prosad BA	Clerk, D A G P & T Office	7, Koilaghat Street	ditto
	Mukharji, Jogesh Chandra, BA	Head Clerk, I T Office	1, Hare Street	ditto
	Mukharji, Jogesh Chandra	Head Clerk, I-B Petroleum Co, Ld	8, Clive Street	ditto
	Mukharji, Jugal Kishore	Assistant, Burn & Co., Ld	12, Mission Row	ditto
	Mukharji, Juganath, BA	Clerk, Telegraph Check Office	33, Dalhousie Square, South	ditto
	Mukharji, Kala Chand	Assistant, Accountant-General's Office, Bengal	Treasury Buildings	ditto
	Mukharji, Kali Charan	Assistant, Reserve Bank of India	8, Council House Street	ditto
	Mukharji, Kalidas	Clerk, Calcutta Improvement Trust	5, Clive Street	ditto
	Mukharji, Kalidas	Assistant, Andrew Yule & Co, Ld	8, Clive Row	ditto
	Mukharji, Kalikesh	Assistant, Central Forms Stores	166, Dharamtalla Street	ditto
	Mukharji, Kaliprasanna	Assistant, Martin & Co	12, Mission Row	ditto
	Mukharji, Kaliprasanna	Assistant, Calcutta University	Senate House	ditto
	Mukharji, Kamala Kanta	Lecturer, Calcutta University	Senate House	ditto
	Mukharji, Kamalapati	Clerk, C O P S's Office, E I R	E I R House	ditto
	Mukharji, Kamal Krishna, B Sc	Inspector, Collection Department, Calcutta Corporation	Municipal Office	ditto
	Mukharji, Kamini Kumar	Divisional Accountant, Accountant-General's Office, Bengal	Treasury Buildings	ditto
	Mukharji, Kanai Lal	Assistant, TM's Department, Port Commissioner's Office	Strand Road	ditto

Mukharji, Karali Mohan ..	.. Cashier, The I-B Petroleum Co, Ld	.. 8, Clive Street ..	..	ditto
Mukharji, Kartic Chandra, B L	.. Stock Verifier, Accounts Department, Calcutta Corporation	.. Municipal Office ..	..	ditto
Mukharji, Karunamaya ..	.. Assistant, Octavius Steel & Co, Ld	.. 14. Old Court House Street	..	ditto
Mukharji, K C ..	.. Assistant, Jessop & Co, Ld	.. 93, Clive Street ..	..	ditto
Mukharji, K D ..	.. Clerk, Accounts Office, Calcutta Mint	.. 47, Strand Road ..	..	ditto
Mukharji, Keshab Chandra	.. Assistant, Income Tax Office	.. 6, Esplanade East ..	..	ditto
Mukharji, Kiran Kumar, BA	.. Head Assistant, Mathematical Instrument Office ..	.. 15, Wood Street ..	..	Christian
Mukharji, Krishna Lal, BA	.. Clerk, City Architect's Department, Calcutta Corporation	.. Municipal Office ..	..	Hindu
Mukharji, Kshetra Dhan	.. Accountant, North British & Mercantile Insurance Co, Ld	.. 101-1, Clive Street ..	..	ditto
Mukharji, Kshetra Mohan	.. Assistant Cashier, Landale & Clark, Ld ..	.. 11, Clive Street ..	..	ditto
Mukharji, Kshetra Mohan, MSc	.. Clerk, D A G, P & T Office	.. 7, Kaylaghat Street ..	..	ditto
Mukharji, Kshetra Nath ..	.. Assistant, Bird & Co ..	.. 1-1, Clive Street ..	..	ditto
Mukharji, Kshetra Mohan	.. Clerk, Mackenzie, Lyall & Co	.. 5, Mission Row ..	..	ditto
Mukharji, Kshirode Mohan	.. Assistant Engineer, Martin & Co	.. 12, Mission Row ..	..	ditto
Mukharji. Kshitish Chandra, BL	.. Assistant, Commercial Intelligence Department, India	.. 1, Council House Street ..	..	ditto
Mukharji, Lalit Behary ..	.. Clerk, Burmah Shell Co of India, Ld	.. Hongkong House ..	..	ditto
Mukharji, Lalit Kumar ..	.. Assistant Superintendent, Agent's Office, E B R ..	.. 3, Kaylaghat Street ..	..	ditto
Mukharji, Lalit Mohan ..	.. Estimator, Calcutta Improvement Trust	.. 5, Clive Street ..	..	ditto
Mukharji, Lalit Mohan ..	.. Assistant, Grahams Trading Co (India), Ld ..	.. 6, Lyons Range ..	..	ditto

No.	Names.	Style or calling.	Residence or place of business.	Religion.
	Mukharji, Lalit Mohan	Clerk, Turner, Morrison & Co, Ld	6, Lyons Range	Hindu
	Mukharji, Lalit Mohan, BA	2nd Assistant, Office of the Commissioner of Income-tax	Imperial Secretariat Buildings	ditto
	Mukharji, Lal Mohan	Accountant, Stewart & Co	8, Clive Street	ditto
	Mukharji, Lal Mohan	Clerk, Harrisons and Crossfield	6, Church Lane	ditto
	Mukharji, L M	Clerk, McGregor & Balfour, Ld	11, Clive Street	ditto
	Mukharji, Makhanlal	Assistant Book Keeper, Imperial Tobacco Co of India, Ld	37, Chowringhee	ditto
	Mukharji, Makhan Lal	Accountant, Bengal Chamber of Commerce	2, Clive Street	ditto
	Mukharji, Makhanlal	Clerk, Imperial Bank of India	3, Strand Road	ditto
	Mukharji, Manamohan	Assistant, Bird & Co	1-1, Clive Street	ditto
	Mukharji, Manamohan	Assistant, Bengal Secretariat, Finance Department	Writers' Buildings	ditto
	Mukharji, Manamohan	Assistant, Reed, Ward & Co	6, Lyons Range	ditto
	Mukharji, Manamohan	Clerk, Gillanders, Arbuthnot & Co	8, Clive Street	ditto
	Mukharji, Manatosh	Advt Inspector, Traffic Department, E B R	3, Kaylaghat Street	ditto

Mukharji, Manimohan	Clerk, Agent's Office, E B R	3, Kaylaghat Street		ditto
Mukharji, Manindra Narayan, I, BA	Clerk, D A G P & T Office	7, Kaylaghat Street		ditto
Mukharji, Manindra Nath	Assistant, Accountant-General's Office, Bengal	Treasury Buildings		ditto
Mukharji, Manindra Nath, BA	Inspector Surveyor, I T Office	3, Government Place, West		ditto
Mukharji, Manindra Nath, BA	Assessor, Income-tax Office	3, Government Place, West		ditto
Mukharji, Manmatha Nath	Clerk, C O S Office, E I R	E I R House		ditto
Mukharji, Manmatha Nath	Assistant, Bird & Co	1-1, Clive Street		ditto
Mukharji, Mati Lal	Assistant. Royal Insurance Co, Ld	26 and 27, Dalhousie Square		ditto
Mukharji, Mati Lal, BA	Accounts Clerk, E B R	3, Koilaghat Street		ditto
Mukharji, Mati Lal	Assistant, Excise Commissioner's Office, Bengal	Writers' Buildings		ditto
Mukharji, M N	Clerk, Calcutta Mint	47, Strand Road		ditto
Mukharji, Mohan Lal	Clerk, Telegraph Check Office	33, Dalhousie Square, South		ditto
Mukharji, Mohit Kumar	Head Clerk, Lloyds Bank, Ld	101-1, Clive Street		ditto
Mukharji, Mrityunjaya	Assistant, Cox and Kings (Agents), Ld	5, Bankshall Street		ditto
Mukharji, Murari Mohan	Assistant, Calcutta University	Senate House		ditto
Mukharji, Nagendra Nath, II, BA	Clerk, D A G P & T Office	7, Kaylaghat Street		ditto
Mukharji, Nagendra Nath	Assistant, Mackinnon, Mackenzie & Co	16, Strand Road		ditto
Mukharji, Nagendra Nath	Clerk, Imperial Bank of India	3, Strand Road		ditto
Mukharji, Nagendra Nath	Assistant, Central Forms Store	166, Dharamtala Street		ditto

No.	Names.	Style or calling.	Residence or place of business.	Religion.
	Mukharji, Nalini Mohan ..	Assistant, Ludlow Jute Co, Ld	7, Royal Exchange Place	Hindu
	Mukharji, Nanda Gopal ..	Head Clerk, Traffic Deptt, E B R	3, Kaylaghat Street	ditto
	Mukharji, Nanda Lal ..	Clerk, Burmah Shell Co of India, Ltd	Hongkong House	ditto
	Mukharji, Nanda Lal ..	Assistant, Accounts Department, Calcutta Corporation	Municipal Office	ditto
	Mukharji, Nanda Lal ..	Assistant, Central Stationery Office	3, Church Lane	ditto
	Mukharji, Nani Gopal ..	Assistant, Bird & Co	1-1, Clive Street	ditto
	Mukharji, Nani Gopal, II	Clerk, D A G P & T Office	7, Kaylaghat Street	ditto
	Mukharji, Nani Gopal ..	Professor, Bangabasi College	25-1, Scott Lane	ditto
	Mukharji, Nani Gopal ..	Assistant, Office of the Controller of Currency	Treasury Buildings	ditto
	Mukharji, Narayan C ..	Cashier and Accountant, Linotype & Machinery, Ltd.	21, Bowbazar Street	ditto
	Mukharji, Narayan Das, BA	Teacher, Mitra Institution	55, Harrison Road	ditto
	Mukharji, Narayan Das, BA	Clerk, D A G P & T Office	7, Kaylaghat Street	ditto
	Mukharji, Narendra Krishna	Accountant, Licensed Measurers Department	2, Clive Street	ditto
	Mukharji, Narendra Nath	Clerk, D A G P & T Office	7, Kaylaghat Street	ditto
	Mukharji, Narendra Nath	Overseer, Engineering Department, Port Commissioners' Office	Strand Road	ditto
	Mukharji, Narendra Nath	Assistant, Bengal Secretariat, Finance Department	Writers' Buildings	ditto
	Mukharji, Narendra Nath, I	Assistant, Bengal Secretariat, P W D	Writers' Buildings	ditto
	Mukharji, Narendra Nath, II	Assistant, Bengal Secretariat, P W D	Writers' Buildings	ditto
	Mukharji, Narendra Nath	Clerk, Imperial Bank of India	3, Strand Road	ditto
	Mukharji, Nepal Chandra, BA	Clerk, Bill Department, Calcutta Corporation	Municipal Office	ditto
	Mukharji, Netai Gopal ..	Clerk, Calcutta Improvement Trust	5, Clive Street	ditto
	Mukharji, Nirapada ..	Assistant Estimator, Calcutta Improvement Trust	5, Clive Street	ditto
	Mukharji, Nirmal Chandra	Assistant, Balmer, Lawrie & Co, Ld	103, Clive Street	ditto
	Mukharji, Nirmal Shashi, BA	Assistant, Surveyor-General's Office	13, Wood Street	ditto

Mukharji, Nripal Chandra	Assistant, Accountant-General's Office, Bengal	Treasury Buildings	ditto
Mukharji, Nripendra Mohan	Assistant, Calcutta University	Senate House	ditto
Mukharji, Nripendra Nath	Clerk, Secretary's Department, Port Commissioners' Office	Strand Road	ditto
Mukharji, Nripendra Nath	Clerk, D A G P & T Office	7, Koilaghat Street	ditto
Mukharji, Nritya Gopal	Surveyor and Estimator, Calcutta Corporation	Municipal Office	ditto
Mukharji, Panchanan	Assistant, Office of the Director of Public Health, Bengal	Writers' Buildings	ditto
Mukharji, Panchanan	Clerk, Pre-Audit, Port Commissioners' Office	Strand Road	ditto
Mukharji, Panchu Gopal	Assistant, Bird & Co	1-1, Clive Street	ditto
Mukharji, Panchu Gopal	Assistant, Begg Dunlop & Co, Ld	2, Hare Street	ditto
Mukharji, Panchu Gopal	Assistant, Account's Deptt, Bengal Secretariat	Writers' Buildings	ditto
Mukharji, Panchu Gopal	Clerk, C A 's Office, E I R	E I R House	ditto
Mukharji, Paritosh	Clerk, D A G P & T Office	7, Koilaghat Street	ditto
Mukharji, Phani Bhusan	Assistant, Calcutta Improvement Trust	5, Clive Street	ditto
Mukharji, Phani Bhusan	Estimator, Executive Engineer's Office, City Division P W D	Writers' Buildings	ditto
Mukharji, Phani Bhusan	Head Clerk, Roberts, McLean & Co, Ld	101, Clive Street	ditto
Mukharji, Phani Bhusan	Professor, Bangabasi College	25-1, Scott Lane	ditto
Mukharji, Phanindra Nath	Clerk, Burmah Shell Co of India, Ld	Hongkong House	ditto
Mukherji, Phanindra Nath	Director, Advance Engineering Works, Ld	Mercantile Buildings	ditto
Mukharji, P C	Assistant, Jessop & Co, Ld	93, Clive Street	ditto
Mukharji, Phelaram	Inspector, Collection Department, Calcutta Corporation	Municipal Office	ditto
Mukharji, Prabhat Chandra	Assistant, Accounts Department, Calcutta Corporation	Municipal Office	ditto

No.	Names.	Style or calling.	Residence or place of business.	Religion.
	Mukharji, Prabhat Chandra	Clerk, Traffic Department, E B R	3, Koilaghat Street	Hindu
	Mukharji, Prabodh Chandra	Head Clerk, Traffic Department, E B R	3, Kaylaghat Street	ditto
	Mukharji, Prabodh Chandra	Clerk, Ralli Bros, Ld	16, Hare Street	ditto
	Mukharji, Prabodh Chandra, MA	Assistant, Calcutta University	Senate House	ditto
	Mukharji, Prabodh Kumar	Assistant, Bengal Secretariat, Finance Department	Writers' Buildings	ditto
	Mukharji, Prafulla Dhan	Clerk, Place, Siddons & Gough	6, Lyons Range	ditto
	Mukharji, Prafulla Kumar	Stenographer, Imperial Chemical Industries (India), Ld	18, Strand Road	ditto
	Mukharji, Prafulla Kumar	Assistant, Bird & Co	1-1, Clive Street	ditto
	Mukharji, Prafulla Kumar	Clerk, D A G P & T Office	7, Koilaghat Street	ditto
	Mukharji, Prafulla Kumar	Stenographer, Imperial Chemical Industries (India), Ld	18, Strand Road	ditto
	Mukharji, Prafulla Kumar	Cashier, Carr & Co, Ld	3, Waterloo Street	ditto
	Mukharji, Prafulla Kumar	Assistant, Mackinnon Mackenzie & Co	16, Strand Road	ditto
	Mukharji, Prakash Chandra	Clerk, Calcutta Improvement Trust	5, Clive Street	ditto
	Mukharji, Pran Krishna	Head Clerk, Mechl Department, E B R	3, Kaylaghat Street	ditto
	Mukharji, Prasad Das	Clerk, Turner, Morrison & Co, Ld	6, Lyons Range	ditto
	Mukharji, Prativa Ch	Clerk, D A G P & T Office	7, Koilaghat Street	ditto
	Mukharji, Pravas Chandra	Head Clerk, Traffic Department, E B R	3, Kaylaghat Street	ditto
	Mukharji, Pravat Chandra, M A	Clerk, Telegraph Check Office	33, Dalhousie Square, South	ditto

Mukharji, Pulin Bihari	Assistant, Commercial Intelligence Department	1, Council House Street	ditto
Mukharji, Pulin Bihari	Clerk, W T Henley's Telegraph Works, Co, Ld	Old Court House Corner	ditto
Mukharji, Puranjan, B E	Overseer, Calcutta Improvement Trust	5, Clive Street	ditto
Mukharji, Purna Ch	Clerk, Calcutta Improvement Trust	5, Clive Street	ditto
Mukharji, Purna Chandra	Assistant, Accountant-General's Office, Bengal	Treasury Buildings	ditto
Mukharji, Purna Chandra	Clerk, Place, Siddons & Gough	6, Lyons Range	ditto
Mukharji, Radha Charan, MA	Assistant, Calcutta University	Senate House	ditto
Mukharji, Radha Krishna, BA	Assistant, Bengal Secretariat, Finance Department	Writers' Buildings	ditto
Mukharji, Raghubar, BSc	Passed Accounts Clerk, Workshops Electrical Division	Writers' Buildings	ditto
Mukharji, Raghunath	Salesman, Dodge & Seymour, Ld	Tower House, Chowringhee Square	ditto
Mukharji, Rajendra Nath	Assistant, Bird & Co	1-1, Clive Street	ditto
Mukharji, Rajkumar, BA	Assistant, Controller's Office, Calcutta University	Senate House	ditto
Mukharji, Rajkumar	Clerk, Engineering Department, Port Commissioners' Office	Strand Road	ditto
Mukharji, Ramani Mohan	Peshkar, Improvement Trust Tribunal	6, Hastings Street	ditto
Mukharji, Ramani Mohan	Head Clerk, Ludlow Jute Co, Ld	7, Royal Exchange Place	ditto
Mukharji, Ramesh Chandra	Head Clerk, Executive Engineer's Office, Hijli Division	Writers' Buildings	ditto
Mukharji, Rampada	Assistant, Accountant-General's Office, Bengal	Treasury Buildings	ditto

No.	Names.	Style or calling.	Residence or place of business.	Religion.
	Mukharji, Rana Behari ..	Building Inspector, Calcutta Corporation	Municipal Office	Hindu
	Mukharji, Rashbihari, B A	Clerk, D A G P & T Office	7, Kaylaghat Street	ditto
	Mukharji, Rashbihari	Clerk, Collection Department, Calcutta Corporation	Municipal Office	ditto
	Mukharji, Ratneshwar	Clerk, Telegraph Check Office	33, Dalhousie Square, South	ditto
	Mukharji, R G, MSc., AMIE	Head Estimator, Superintending Engineer's Office, Electrical Circle, Bengal	Writers' Buildings	ditto
	Mukharji, Robin	Assistant, Martin & Co	12, Mission Row	ditto
	Mukharji, Robindra Nath	Stenographer, Burmah Shell Co of India, Ld	Hongkong House	ditto
	Mukharji, R P	Assistant, Butterworth & Co, (India), Ld	Chowringhee Square	ditto
	Mukharji, Sachchidananda, M Sc	Assistant Teacher, Bethune Collegiate School	181, Cornwallis Street	ditto
	Mukharji, Sachi Pati	Contract Inspector, Bengal Telephone Corporation, Ld	8, Hare Street	ditto
	Mukharji, Sadhandhan	Assistant, Bird & Co	1-1, Clive Street	Christian
	Mukharji, Saibadas	Assistant, Calcutta University	Senate House	Hindu
	Mukharji, Sajani Mohan	Assistant, Ludlow Jute Co, Ld	7, Royal Exchange Place	ditto
	Mukharji, Sambhunath	Clerk, Telegraph Check Office	33, Dalhousie Square, South	ditto
	Mukharji, Santanu Kumar	Demonstrator, Presidency College	86-1, College Street	ditto
	Mukharji, Santos Kumar, I	Superintendent, Calcutta Improvement Trust	5, Clive Street	ditto
	Mukharji, Santos Kumar, II	Clerk, Calcutta Improvement Trust	5, Clive Street	ditto
	Mukharji, Santos Kumar, I	Assistant, Central Stationery Office	3, Church Lane	ditto

Mukharji, Santos Kumar	Assistant, Accounts Department, Calcutta Corporation	Municipal Office	ditto
Mukharji, Sarbani	Clerk, D A G P & T Office	7, Kaylaghat Street	ditto
Mukharji, Satindra Nath, I	Assistant, Accounts Department, Calcutta Corporation	Municipal Office	ditto
Mukharji, Satindra Nath	Draftsman, Surveyor-General's Office	13, Wood Street	ditto
Mukharji, Satish Chandra	Clerk, Gillanders Arbuthnot & Co	8, Clive Street	ditto
Mukharji, Satish Chandra	Record-Keeper, Bengal Telephone Corporation, Ld	8, Hare Street	ditto
Mukharji, Satish Chandra	Stenographer, Imperial Chemical Industries (India), Ld	18, Strand Road	ditto
Mukharji, Satkari	Assistant, Lovelock & Lewes	4, Lyons Range	ditto
Mukharji, Satya Charan	Clerk, Burmah Shell Co of India, Ld	Hongkong House	ditto
Mukharji, Satya Charan, B SC	Demonstrator, Ripon College	24, Harrison Road	ditto
Mukharji, Satya Charan	Assistant, Office of the Inspector-General of Registration	Writers' Buildings	ditto
Mukharji, Satyaranjan	Engineer, Krupp Indian Trading Co, Ld	22, Canning Street	ditto
Mukharji, Satya Hari	Assistant, Accountant-General's Office, Bengal	Treasury Buildings	ditto
Mukharji, Satya Prosanna, BSC	Assistant, Accountant-General's Office, Bengal	Treasury Buildings	ditto

No.	Names.	Style or calling	Residence or place of business.	Religion.
	Mukharji, Satyendra Kumar	Assistant, Ford, Rhodes, Thornton & Co	Tower House, Chowringhee Square	Hindu
	Mukharji, Satyendra Nath, MA, BT	Assistant Master, Hindu School	College Square	ditto
	Mukharji, Satyendra Nath	Clerk, Burmah Shell Co of India, Ld	Hongkong House	ditto
	Mukharji, S B	Assistant, Barry & Co	2, Fairlie Place	ditto
	Mukharji, S B	Clerk, Sun Life Assurance Co of Canada	12, Dalhousie Square, East	ditto
	Mukharji, S C	Assistant, Bullion Keeper, Calcutta Mint	47, Strand Road	ditto
	Mukharji, Shachindra Nath	Examiner of Stores, Indian Stores Deptt	6, Esplanade, East	ditto
	Mukharji, Shaila Ch	Clerk, D A G, P & T Office	7, Koilaghat Street	ditto
	Mukharji, Shailajananda	Assistant Inspector of Messes, Calcutta University	Senate House	ditto
	Mukharji, Shailendra K	Surveyor, Calcutta Improvement Trust	5, Clive Street	ditto
	Mukharji, Shailendra Nath	Assistant, Calcutta University	Senate House	ditto
	Mukharji, Sharat Chandra	Clerk, Marine Department, South British Insurance Co, Ld	5, Clive Street	ditto
	Mukharji, Sharat Chandra	Assistant, Bengal Secretariat, P W D	Writers' Buildings	ditto

Mukharji, Sharat Shashi	Assistant, McLeod & Co	28, Dalhousie Square	ditto
Mukharji, Shashadhar	Auditor, George Read & Co	Avenue House, Chowringhee Square	ditto
Mukharji, Shashanka Shekhar	Head Clerk, Sales, Imperial Tobacco Co of India, Ld	37, Chowringhee	ditto
Mukharji, Shiddeshwar, M Sc (1)	Clerk, D A G, P & T Office	7, Koilaghat Street	ditto
Mukharji, Shiddeshwar	Assistant, Board of Revenue, Bengal	Writers' Buildings	ditto
Mukharji, Shivadas	Assistant, Accountant-General's Office, Bengal	Treasury Buildings	ditto
Mukharji, Shiva Narayan	Stenographer, Traffic Department, E B R	3, Koylaghat Street	ditto
Mukharji, Shivapada	Assistant, Accountant-General's Office, Bengal	Treasury Buildings	ditto
Mukharji, Shiva Prasad	Assistant, Mackinnon, Mackenzie & Co	16, Strand Road	ditto
Mukharji, Shivaram	Assistant, Accountant-General's Office, Bengal	Treasury Buildings	ditto
Mukharji, Shivaram	Clerk, Lighting Department, Calcutta Corporation	Municipal Office	ditto
Mukharji, Shrish Chandra	Accounts Clerk, E B R	3, Koilaghat Street	ditto
Mukharji, Shyama Charan	Estimator, Office of Superintending Engineer, S W Circle	Treasury Buildings	ditto
Mukharji, Shyamadas, M Sc	Clerk, D A G, P & T Office	7, Koilaghat Street	ditto

No.	Names	Style or calling.	Residence or place of business.	Religion.
	Mukharji, Shyamapada ..	.. Plate-keeper, Photo-Litho Branch, Surveyor-General's Office	.. 14, Wood Street	Hindu
	Mukharji, Shyamlal, BSc	.. Professor, Vidyasagar College	.. 39, Sankar Ghose Lane	ditto
	Mukharji, Siddheshwar ..	.. Clerk, Central Stationery Office	.. 3, Church Lane	ditto
	Mukharji, Sitapati ..	.. Engineering Assistant, Jewell Export Filter Co, Inc	.. 10, Clive Street	ditto
	Mukharji, Sourendra Mohan	.. Clerk, Telegraph Check Office	.. 33, Dalhousie Square, South ..	ditto
	Mukharji, S P ..	.. Secretary, Shree Radha Krishna Sugar Mills, Ld ..	.. 138, Harrison Road	ditto
	Mukharji, Sripati ..	.. Clerk, D A G, P & T Office	.. 7, Koilaghat Street	ditto
	Mukharji, Sudhanshu Kumar	.. Clerk, Burmah Shell Co of India, Ld	.. Hongkong House	ditto
	Mukharji, Sudhin Chandra	.. Clerk, Burmah Shell Co of India, Ld	.. Hongkong House	ditto
	Mukharji, Sudhir Chandra	.. Clerk, Mathematical Instrument Office	.. 15, Wood Street	ditto
	Mukharji, Sudin Prakash	.. Head Clerk, Norwich Union Fire Insurance Society, Ld	.. 8, Old Court House Street ..	ditto
	Mukharji, Sukumar, M A ..	.. Lecturer, Vidyasagar College	.. 39, Shankar Ghose Lane ..	ditto
	Mukharji, Sunil Bhusan ..	.. Subhead, Accounts Office, E B R ..	.. 3, Koilaghat Street	ditto
	Mukharji, Surendra Nath	.. Clerk, Calcutta Improvement Trust	.. 5, Clive Street	ditto

Mukharji, Surendra Nath	Clerk, D A G, P & T Office	7, Koilaghat Street	ditto
Mukharji, Surendra Nath	Assistant, Explosives Office	1, Council House Street	ditto
Mukharji, Surendra Nath	Accounts Clerk, E B R	3, Koilaghat Street	ditto
Mukharji, Surendra Nath	Clerk, Turner Morrison & Co, Ld	6, Lyons Range	ditto
Mukharji, Suresh Chandra	Clerk, C A O s Office, E I R	E I R House	ditto
Mukharji, Suresh Chandra	Clerk, Mechanical Dept, E B R	3, Koilaghat Street	ditto
Mukharji, Suresh Chandra, BL	Accounts Clerk, E B R	3, Koylaghat Street	ditto
Mukharji, Suresh Chandra	Reader, Govt of India Press	8, Hastings Street	ditto
Mukharji, Sushen Chandra	Assistant, Office of the Controller of Currency	Treasury Buildings	ditto
Mukharji, Sushil Chandra	Head Assistant, Surgeon-General's Office, Bengal	Writers' Buildings	ditto
Mukharji, Tara Kumar	Clerk, D A G, P & T Office	7, Koilaghat Street	ditto
Mukharji, Tarak Nath, BA	Assessing Inspector, Calcutta Corporation	Municipal Office	ditto
Mukharji, Tarapada	Clerk, C O P S Office, E I R	E I R House	ditto
Mukharji, Tarapada	Clerk, C A O's Office, E I R	E I R House	ditto
Mukharji, Tinkari	Assistant, McLeod & Co	28, Dalhousie Square	ditto
Mukharji, Tinkari, BA	Head Clerk, Stewart & Co	8, Clive Street	ditto
Mukharji, T K	Assistant Cashier, Remington Rand Inc	3, Council House Street	ditto
Mukharji, Topon Top	P A to Agent, Calcutta Tramways Co, Ld	7, Church Lane	ditto
Mukharji, Tulsi Charan	Assistant, Botanical Survey of India	Indian Museum	ditto

No.	Names.	Style or calling	Residence or place of business.	Religion.
	Mukharji, Tustapada	Accounts Clerk, E B R	3, Koylaghat Street	Hindu
	Mukharji, Upendra Chandra	Head Record Clerk, Secretary's Department, Port Commissioners' Office	Strand Road	ditto
	Mukharji, Upendra Nath	Assistant, McLeod & Co	28, Dalhousie Square	ditto
	Mukharji, Upendra Nath	Levelling Surveyor, Special Officer's Dept, Calcutta Corporation	Municipal Office	ditto
	Munshi, Ananta Kumar, BA	Assistant, Accounts Department, Calcutta Corporation	Municipal Office	ditto
	Murti, P N	Assistant Electrical Engineer, E I R	E I R House	ditto
	Mustafi, Haridas, BA	Assistant, Accountant-General's Office, Bengal	Treasury Buildings	ditto
	Mustafi, Manindra Nath	Assistant, Office of the Director of Public Health, Bengal	Writers' Buildings	ditto
	Mustafi, Sukumar	Assistant, McLeod & Co	28, Dalhousie Square	ditto
	Mustafi, Surendra Nath, BA	Assistant, Accountant-General's Office, Bengal	Treasury Buildings	ditto
	N			
	Nabi, Ghulam	Assistant (Photo-Litho), Survey of India	14, Wood Street	Mahomedan
	Nag, A K	Assistant, Guest, Keen, Williams, Ld	7, Council House Street	Hindu
	Nag, A N	Broker, H J Foster & Co, Ld	Sassoon House	ditto
	Nag, Bhupati Mohan	Food Inspector, Calcutta Corporation	22, Mirzapore Street	ditto
	Nag, Girija Bhusan	Head Clerk, Supply, Imperial Tobacco Co of India, Ld	37, Chowringhee	ditto
	Nag, Gokul Chandra	Assistant, A-G's Office, Bengal	Treasury Buildings	ditto
	Nag, Hem Chandra	Clerk, Norwich Union Fire Insurance Society, Ld	8, Old Court House Street	ditto

Nag, Kshitindra Kumar ..	Assistant, Jeewanlal (1929), Ld	101, Clive Strreet	ditto
Nag, Nagendra Chandra ..	Sub-Assistant Superintendent, Survey of India	13, Wood Street	ditto
Nag, Nirmal, BA	Clerk, C E's Office, Calcutta Corporation	Municipal Office	ditto
Nag, Nirmal Chandra	Assistant, Accounts Department, Calcutta Corporation	Municipal Office	ditto
Nag, Prafulla Kumar	Food Inspector, Calcutta Corporation	22, Mirzapore Street	ditto
Nag, Pulin Bihari	Clerk, Alliance Assurance Co, Ld	2, Hare Street	ditto
Nag, Satish Chandra	Assistant, Office of the I-G of Police	Writers' Buildings	ditto
Nag, Shailendra Prasad, MSc	Lecturer, Bethune College	181, Cornwallis Street	ditto
Nag Chaudhuri, Saroj Kumar	Stenographer and Junior Council Reporter	Writers' Buildings	ditto
Nagarwala, Noshir Hirji ..	Assistant, Imperial Chemical Industries (India), Ld	18, Strand Road	Zoroastrian
Naha, Upendra Mohan	Clerk, D A G P & T Office	7, Koilaghat Street	Hindu
Naidu, Poorati Govind Rajuloo	Sr Clerk, Office of the Controller of Purchase, Indian Stores Department	6, Esplanade East	ditto
Nair, Vedikara Madhavan	Secretary, Walford Transport, Ld	71-73, Park Street	ditto
Nanavati, Valabhdass Kersondas	Head Assistant, Jupiter General Insurance Co, Ld	7, Pollock Street	Jain
Nandi, Advaita Charan	Cashier, T E Thomson & Co, Ld	9, Esplanade, East	Hindu
Nandi, Amulya Kumar	Clerk, D A G P & T Office	7, Koilaghat Street	ditto
Nandi, Anukul Chandra	Stock Verifier, Accounts Department, Calcutta Corporation	Municipal Office	ditto
Nandi, Ashutos	Clerk, Agent's Office, E B R	3, Kaylaghat Street	ditto
Nandi, Baidyanath	Assistant, Commercial Intelligence Department	1, Council House Street	ditto
Nandi, Bishnupada, BA ..	Assistant, Accountant-General's Office, Bengal	Treasury Buildings	ditto
Nandi, Chandra Nath, BCOM	Clerk, D A G P & T Office	7, Koilaghat Street	ditto

No.	Names.	Style or calling.	Residence or place of business.	Religion.
	Nandi, C N	Supervisor, Telegraph Check Office	33, Dalhousie Square, South	Hindu
	Nandi, Gora Chand	Assistant, Burn & Co, Ld	12, Mission Row	ditto
	Nandi, Jatindra Nath	Assistant, F W Heilgers & Co	1-1, Clive Street	ditto
	Nandi, Krishna Gopal	Clerk, D A G P & T Office	7, Koilaghat Street	ditto
	Nandi, Manindra Nath	Clerk, Macmillan & Co, Ld	294, Bowbazar Street	ditto
	Nandi, Manmatha Nath	Assistant, Brooke Bond (India), Ld	2, Metcalfe Street	ditto
	Nandi, M N	Clerk, Liverpool & London & Globe Insurance Co, Ld	26, Dalhousie Square	ditto
	Nandi, Prabodh Chandra, BA	Assistant, Office of the Controller of Currency	Treasury Buildings	ditto
	Nandi, Purna Chandra	Assistant, A-G's Office, Bengal	Treasury Buildings	ditto
	Nandi, Radha Kanta, BA	Clerk, D A G P & T Office	7, Koilaghat Street	ditto
	Nandi, R K	Clerk, P. S Office, E I R	E I R House	ditto
	Nandi, Sharat Chandra	Clerk, National Bank of India, Ld	104, Clive Street	ditto
	Nandi, Shashi Bhusan	Head Clerk, Office of the Executive Engineer, Suburban Division, P W D	Writers' Buildings	ditto
	Nandi, Shishir Kumar	Clerk, D A G P & T Office	7, Koilaghat Street	ditto
	Nandi, Suryya Kumar	Accountant, Bengal Provincial Co-operative Bank, Ld	Writers' Buildings	ditto
	Nandi, Tara Charan	Professor, Bangabasi College	25-1, Scott Lane	ditto
	Nanjundia, B	Assistant, Burn & Co, Ld	12, Mission Row	ditto
	Narayan, Ganti Yeggen	Clerk, Standard Telephones & Cables, Ld	4, Esplanade East	ditto
	Narayan, Jai	Clerk, Agent's Office, E I R	E I R House	ditto
	Narayan, Kumarapuram Parameswar	Stenotypist, Martin & Co	12, Mission Row	ditto

Narayan, V V S	Chief Accountant, Remington Rand Inc	3, Council House Street	ditto
Nasir, Mahomed	Clerk, C A O's Office, E I R	E I R House	Mahomedan
Naskar, M L	Book-keeper, Glenfield & Kennedy, Ld	4, Fairlie Place	Hindu
Natarajan, Kothandarama Iyer	Clerk, Grindlay & Co, Ld	6, Church Lane	ditto
Natarajan, Minakshi Sundaram	Assistant, Andrew Yule & Co, Ld	8, Clive Row	ditto
Nath, Jnanendra Chandra	Building Inspector, Calcutta Corporation	Municipal Office	ditto
Nath, Manmatha Nath	Assistant, W Newman & Co, Ld	3, Old Court House Street	ditto
Nath, Narayan Chandra, MA	Assistant, Map Record Branch, Surveyor-General's Office	13, Wood Street	ditto
Nath, Prasad Chandra	Assistant, Retouching Section, Photo-Litho Branch, Surveyor-General's Office	14, Wood Street	ditto
Niyogi, Amiya Kanta, BSc	Assistant, Bengal Legislative Council	Council House	ditto
Niyogi, B B	Head Clerk, Britannia Biscuit Co, Ld	Stephen House	ditto
Niyogi, Chandra Bhusan	Assistant, Mercantile Marine Department	15-1, Strand Road	ditto
Niyogi, Hiralal, BA	Overseer, District No II, Calcutta Corporation	22, Mirzapore Street	ditto
Niyogi, Jyotish Chandra, B A	Clerk, D A G P & T Office	7, Koilaghat Street	ditto
Niyogi, Kishorilal	Assistant, National Insurance Co, Ld	7, Council House Street	ditto
Niyogi, Nalini Mohan	Assistant, Bengal Secretariat, L S-G Deptt	Writers' Buildings	ditto
Niyogi, Narayan Chandra	Clerk, Turner, Morrison & Co, Ld	6, Lyons Range	ditto
Niyogi, Narendra Nath	Demonstrator, Presidency College	86-1, College Street	ditto
Niyogi, Ruchirendra	Assistant, Bengal Secretariat, Revenue Department	Writers' Buildings	ditto
Niyogi, Sudhir Chandra, DSC	Professor, City College	102-1, Amherst Street	ditto
Nurullah, Md Abul Ula	Assistant Maulvi, Calcutta Madrasah	19, Wellesley Square	Mahomedan

No.	Names.	Style or calling.	Residence or place of business.	Religion.
	O			
	Omar, Zahid	Examiner of Stores, Indian Stores Deptt	6, Esplanade East	Mahomedan
	Oonvala, Sorabji Muncharji	Assistant, Bengal Secretariat, Commerce Department	Writers' Buildings	Zoroastrian
	P			
	Padhiar, Nrisinha Prasad Kanji	Assistant, Jewanlal (1929), Ld	101, Clive Street	Hindu
	Pal, Adwaita Charan	Traveller, Blackie & Son (India), Ld	285-11, Bowbazar Street	ditto
	Pal, Anil Shekhar	Assistant Accounts Department, Calcutta Corporation	Municipal Office	ditto
	Pal, Anucul Chandra	Assistant, Thacker Spink & Co (1933), Ld	3, Esplanade East	ditto
	Pal, Arabinda	Clerk, Jardine, Skinner & Co	4, Clive Row	ditto
	Pal, Ashutos	Assistant, Controller's Office, Calcutta University	Senate House	ditto
	Pal, Ashutos	Clerk, C O S Office, E I R	E I R House	ditto
	Pal, Ashwini Kumar	Estimator, Western Electrical Division, P W D	Writers' Buildings	ditto
	Pal, Balailal	Clerk, Shaw, Wallace & Co	4, Bankshall Street	ditto
	Pal, Bansidhar, BL	Offg Accountant, A-G's Office, Bengal	Treasury Buildings	ditto
	Pal, Bata Krishna	Asstt cashier, National Bank of India, Ld	104, Clive Street	ditto
	Pal, Bhupendra Nath	Assistant, Brooke Bond India, Ld	2, Metcalfe Street	ditto
	Pal, Bibekananda, MA	Assistant, Central Forms Stores	166, Dharamtala Street	ditto
	Pal, Bihari Lal	Assistant, Accounts Department, Calcutta Corporation	Municipal Office	ditto
	Pal, Bijaya Krishna	Assistant, Mackinnon, Mackenzie & Co	16, Strand Road	ditto

Pal, Bijaya Krishna	Clerk, *Statesman*, Ld	Statesman House	ditto
Pal, Bijaya Krishna, BA	Clerk, D A G P & T Office	7, Koilaghat Street	ditto
Pal, Binaya Krishna	Clerk, D A G P & T Office	7, Koilaghat Street	ditto
Pal, Debendra Nath	Clerk, Gillanders, Arbuthnot & Co	8, Clive Street	ditto
Pal, Dharma Dass	Assistant, James Finlay & Co, Ld	1, Clive Street	ditto
Pal, Dhirendra Nath	Sub-Head, C A O's Office, E I R	E I R House	ditto
Pal, Dhirendra Nath	Head Clerk, National Bank of India, Ld	104, Clive Street	ditto
Pal, Dulal Krishna, MSc	Assistant, Accountant-General's Office, Bengal	Treasury Buildings	ditto
Pal, Girindra Mohan, BSc, GDA	Examiner of Accounts, Income-tax Office	3, Government Place, West	ditto
Pal, Harendra Chandra, MA, BL	Assistant, Calcutta Insurance, Ld	86, Clive Street	ditto
Pal, Hari Charan	Clerk (Coal Accounts), Port Commissioners' Office	Strand Road	ditto
Pal, Haridas	Sub-Head, Accounts Office, E B R	3, Koilaghat Street	ditto
Pal, Hem Chandra	Clerk, Ralli Brothers, Ld	16, Hare Street	ditto
Pal, Jashoda Nandan	Assistant, Mackinnon, Mackenzie & Co	16, Strand Road	ditto
Pal, Jatindra Mohan	Clerk, D A G P & T Office	7, Koilaghat Street	ditto
Pal, Jitendra Nath	Food Inspector, Calcutta Corporation	79, Cornwallis Street	ditto
Pal, Jitendra Nath	Clerk, Martin & Co	12, Mission Row	ditto

No.	Names.	Style or calling.	Residence or place of business.	Religion.
	Pal, Jnan Chandra	Clerk, Burmah Shell Co of India, Ld	Hongkong House	Hindu
	Pal, Jyotish Chandra	Cash Clerk, Port Commissioners' Office	Strand Road	ditto
	Pal, Krishna Lal	Assistant, Accountant-General's Office, Bengal	Treasury Buildings	ditto
	Pal, Lalit Mohan	Assistant, Brooke Bond (India), Ld	2, Metcalfe Street	ditto
	Pal, L N	Head Draftsman, W W Extention Deptt, Calcutta Corporation	Municipal Office	ditto
	Pal, Madan Mohan (No 1)	Clerk, Chartered Bank of India, Australia and China	1-1, Clive Street	ditto
	Pal. Makhan Lal, BA	Assistant, Accountant-General's Office, Bengal	Treasury Buildings	ditto
	Pal, Nrittya Gopal	Clerk, Burmah Shell Co of India, Ld	Hongkong House	ditto
	Pal, Paritos	Assistant, Balmer, Lawrie & Co, Ld	103, Clive Street	ditto
	Pal, Phanindra Nath	Assistant, Accountant General's Office, Bengal	Treasury Buildings	ditto
	Pal, Prabodh	Assistant, Macneill & Co	2, Fairlie Place	ditto
	Pal, Prakash Chandra	Assistant, Bengal Secretariat, Police Department	Writers' Buildings	ditto
	Pal, Prakash Chandra	Estimator, Governor's Estate Division	Government House	ditto
	Pal, Provas Chandra	Assistant, Calcutta University	Senate House	ditto
	Pal, Pulin Behari	Engineer, Martin & Co	12, Mission Row	ditto
	Pal, Rakhal Chandra	Assistant, Education Department, Bengal Secretariat	Writers' Buildings	ditto
	Pal, Satish Chandra, BA	Offg Accountant, A-G's Office, Bengal	Treasury Buildings	ditto

Pal, Satish Chandra	Cashier, Mackintosh Burn, Ld	8, Clive Street		ditto
Pal, Satya Gopal	Clerk, D A G P & T Office	7, Koilaghat Street		ditto
Pal, Satya Kumar	Clerk, D A G P & T Office	7, Koilaghat Street		ditto
Pal, Shachindra Mohan, M Sc	Examiner of Accounts, Income-tax Office	3, Government Place, West		ditto
Pal, Shailendra Bhusan	Accountant, Ex-Engineer's Office, City Division, P W D	Writers' Buildings		ditto
Pal, Sharat Chandra	Clerk, Lloyds Bank, Ld	101-1, Clive Street		ditto
Pal, Shricharan	Cashier, Marshall Sons & Co (India), Ld	99, Clive Street		ditto
Pal, Shyam Chand	Clerk, Estate Superintendent's Office, Port Commissioners	Strand Road		ditto
Pal, Subodh Chandra	Assistant, Reserve Bank of India	8, Council House Street		ditto
Pal, Sudhish Chandra	Assistant, Brooke Bond (India), Ld	2, Metcalfe Street		ditto
Pal, Suprokash	Assistant, Central Stationery Office	3, Church Lane		ditto
Palit, Ashutos	Clerk, Place, Siddons & Gough	6, Lyons Range		ditto
Palit, Haridas	R D Inspector, E B R	3, Kaylaghat Street		ditto
Palit, Kalipada	Clerk, D A G P & T Office	7, Koilaghat Street		ditto
Palit, Satish Chandra	Clerk, C O P S Office, E I R	E I R House		ditto
Palit, Shachindra Mohan	Assistant, Commercial Intelligence Deptt	1, Council House Street		ditto
Palit, S K, MA	Superintendent, C D Deptt, Central Bank of India, Ld	100, Clive Street		ditto
Panda, M L M	Assistant, Mackinnon, Mackenzie & Co	16, Strand Road		Christian

No.	Names.	Style or calling.	Residence or place of business.	Religion.
	Pande, Bal Dutt	Clerk, Allahabad Bank, Ld	6, Royal Exchange Place	Hindu
	Pandit, Jogendra Nath	Clerk, Burmah Shell Co of India, Ld	Hongkong House	ditto
	Pandit, Nirmal Kumar	Accountant, Pacific Minerals, Ld	100, Clive Street	ditto
	Parakh, D J	Assistant, Imperial Chemical Industries (India), Ld	18, Strand Road	Zoroastrian
	Parekh, A P, R A	Assistant, S R Bathiboi & Co	1-B, Old Post Office Street	ditto
	Pasricha, L S	Manager, Prominent Sports, Ld	19C, Chowringhee	Hindu
	Pasricha, Tek Chand	Assistant Superintendent, C O S Office, E I R	E I R House	ditto
	Pastakia, Burjor Hormusji, BA	Assistant, Tata Iron & Steel Co, Ld	100, Clive Street	Zoroastrian
	Patel, G B	Assistant, National Insurance Co, Ld	7, Council House Street	Hindu
	Patel, Pranjibandas	Assistant, National Insurance Co, Ld	7, Council House Street	ditto
	Pathak, Abinash Chandra	Clerk, Turner, Morrison & Co, Ld	6, Lyons Range	ditto
	Pathak, Amiya Kumar	Chief Clerk, Lloyds Bank, Ld	37, Chowringhee	ditto
	Pathak, Dolatram Jhinaram	Assistant, Jewanlal (1929), Ld	101, Clive Street	ditto
	Pathak, Jatindra Nath	Clerk, Telegraph Check Office	33, Dalhousie Square, South	ditto
	Pathak, Lokendra Nath, MA	Assistant, Calcutta University	Senate House	ditto
	Pathak, Nanilal	Assistant, Bengal Secretariat, L S-G Department	Writers' Buildings	ditto
	Pathak, Prashanta Kumar	Head Stenographer, Accounts Department, Port Commissioners' Office	Strand Road	ditto

Pathak, Ramendra Nath	Stenographer, Imperial Chemical Industries (India), Ld	18, Strand Road	ditto
Patla, Sarveshwar	Estimator, Executive Engineer's Office, Canal Division	Treasury Buildings	ditto
Pathak, Shailendra Nath	Assistant, Calcutta University	Senate House	ditto
Pathak, Shaktisudha, BA	Assistant, Commercial Intelligence Department	1, Council House Street	ditto
Patra, Narayan Chandra	Assistant Printer, *Statesman*, Ld	Statesman House	ditto
Pattabhiraman, R	S A I, C R E's Office	Fort William	ditto
Piplai, Shivaprasad	Clerk, Agency Office, E I R	E I R House	ditto
Poddar, Baroda Charan, BA	Clerk, D A G P & T Office	7, Koilaghat Street	ditto
Pramanik, Abdul Gaffur, BA	Clerk, D A G P & T Office	7, Koilaghat Street	Mahomedan.
Pramanik, Atulya Kumar	Assistant, Calcutta Improvement Trust	5, Clive Street	Hindu
Pramanik, Bijaya Kristo	Clerk, Telegraph Check Office	33, Dalhousie Square, South	ditto
Pramanik, Dwijendra Nath	Clerk, Landale & Clark, Ld	11, Clive Street	ditto
Pramanik, Ganesh Ch	Clerk, Telegraph Check Office	33, Dalhousie Square, South	ditto
Pramanik, Hem Chandra	Assistant, Agriculture and Industries Department, Bengal	Writers' Buildings	ditto
Pramanik, Jiban Krishna	Assistant, Accountant-General's Office, Bengal	Treasury Buildings	ditto
Pramanick, Khetra Mohan	Clerk, DA G P & T Office	7, Koilaghat Street	ditto
Pramanik, Kshirode Kumar	Assistant, Office of the Inspector-General of Prisons, Bengal	Writers' Buildings	ditto
Pramanik, Tulsi Charan*	Assistant, A-G's Office, Bengal	Treasury Buildings	ditto

No.	Names.	Style or calling	Residence or place of business.	Religion.
	Prasad, Bhagwati	Clerk, C O P S Office, E I R	E I R House	Hindu
	Prasad, Gopal, BSC	Demonstrator, Scottish Church College	4, Cornwallis Street	ditto
	Pyne, B N	Chief Clerk, Indian and Eastern Engineering Co, Ld	5, Mission Row	ditto
	Pyne, Nitai Chand	Clerk, David Sassoon & Co	4, Lyons Range	ditto
	Pyne, Srikrishna	Chief Clerk, William Jacks & Co	10, Clive Street	ditto
	Q			
	Quadari, Khaled Abui Ahmed	News Editor, " Star of India "	3, Wellesley Place	Mahomedan
	Quadari, Manzura (Maulvi)	Assistant, Legislative Department, Bengal	Council House	ditto
	Quader, Abdul	Assistant, Office of the Director of Public Instruction, Bengal	Writers' Buildings	ditto
	Quader, Shaikh Abdul (Maulvi), BA	Assistant, Bengal Secretariat, Police Department	Writers' Buildings	ditto
	Quaraishi, Mahomed Serajul Huq (Maulvi), BL	Assistant, Bengali Translator's Office	Writers' Buildings	ditto
	R			
	Rafiq, Mahomed	Assistant, Office of the Geological Survey of India	27, Chowringhee	Mahomedan
	Rafiqur, Rahman	Assistant, Calcutta University	Senate House	ditto
	Raghavan, Parambath Kuppa	Chief Clerk, Standard Telephones & Cables, Ld	4, Esplanade, East	Hindu
	Raha, Amal Kumar, BA	License Inspector, Calcutta Corporation	Municipal Office	ditto
	Raha, Bejoy Kumar, BA	Assistant, National Insurance Co, Ld	7, Council House Street	ditto
	Raha, R O, MA	Inspector of Messes, Calcutta University	Senate House	Christian

Rahim, Abdur	Assistant Maulvi, Imperial Record Department	3, Government Place, West	Mahomedan
Rahim, Kholilar	Reviser, Government of India Press	8, Hastings Street	ditto
Rahim, Mahomed Zohadur (Maulvi), BA	Assistant, Bengal Secretariat, Finance Department	Writers' Buildings	ditto
Rahim, Syed Mahbubur, BA, BT	Head Master, Woodburn M E School	24, Mussalmanpara Lane	ditto
Rahman, A K O	Clerk, Telegraph Check Office	33, Dalhousie Square, South	ditto
Rahman, Atwar	Assistant, A-G's Office, Bengal	Treasury Buildings	ditto
Rahman, Bazlar, BA	Assistant, A G's Office, Bengal	Treasury Buildings	ditto
Rahman, Syed Bazlur	Assistant, Commercial Intelligence Dept	1, Council House Street	ditto
Rahman, Eqbalur, MSC, GDA	Examiner of Accounts, I T Office	6, Esplanade, East	ditto
Rahman, Fazlar	Inspector, Collector's Department, Calcutta Corporation	Municipal Office	ditto
Rahman, Fazlar	Inspector, License Department, Calcutta Corporation	Municipal Office	ditto
Rahman, Habibur	Assistant, Commercial Intelligence Department	1, Council House Street	ditto
Rahman, K F, BCom	Examiner of Accounts, I T Office	6, Esplanade East	ditto
Rahman, Khalilur, BSC, BT	Assistant Master, Calcutta Madrassah	19, Wellesley Square	ditto
Rahman, Khalilur. BA	Assessing Inspector, Calcutta Corporation	Municipal Office	ditto
Rahman, Khalilur	Assessor, Income-tax Office	3, Government Place, West	ditto
Rahman, Lutfar (Maulvi)	Municipal Assistant, Presidency Commissioner's Office	3, Charnock Place	ditto

No.	Names.	Style or calling.	Residence or place of business.	Religion.
	Rahman, Mabibur	Clerk, D A G P & T Office	7, Koilaghat Street	Mahomedan
	Rahman, Mahammad Abdur	Assistant, Bengal Secretariat, Education Department	Writers' Buildings	ditto
	Rahman, Md. Wazihur (Maulvi), BA	Assistant, Bengal Secretariat, Appointment Department	Writers' Buildings	ditto
	Rahman, Matiur, MCOM	Examiner of Accounts, Income Tax Office	3, Government Place, West	ditto
	Rahman, Mir Azizur, BA	Assistant, K C Thaper & Bros, Ld	5, Royal Exchange Place	ditto
	Rahman, Obaidur	Assistant, Andrew Yule & Co, Ld	8, Clive Row	ditto
	Rahman, Shafiur	Assistant, Office of the I-G of Registration, Bengal	Writers' Buildings	ditto
	Rajagopal, T B, MA	Office Superintendent, General Branch, Agent's Office, E B R	3, Koilaghat Street	Hindu
	Rajagopalan, C	Clerk, Price Waterhouse Peat & Co	B-4, Clive Buildings	ditto
	Rajagopalan, Visnanipet Narain	Clerk, C A's Office, E I R	E I R House	ditto
	Rakshit, Amarendra Nath	Engineer, Bhattacharjee & Co	28, Pollock Street	ditto
	Rakshit, Debendra Lal	Clerk, Booking Section, Port Commissioners' Office	Strand Road	ditto
	Rakshit, Gopal Chandra	Stenographer, Imperial Chemical Industries (India), Ld	18, Strand Road	ditto
	Rakshit, Gour Chandra	Clerk, Gillanders, Arbuthnot & Co	8, Clive Street	ditto
	Rakshit, Hridaya Ranjan	Clerk, Agency Office, E I R	E I R House	ditto
	Rakshit, Kalikrishna, BT	Assistant Master, Hindu School	College Square	ditto
	Rakshit, Upendra Nath	Assistant, North British & Mercantile Insurance Co, Ld	101-1, Clive Street	ditto

Ramachar, Brahmanda Krishna	Salesman, Roneo, Ld	32-1, Dalhousie Square	ditto
Ramaiah, P M	Assistant, F W Heilgers & Co	1-1, Clive Street	ditto
Raman, A V, MA	Assistant, Office of the Controller of Currency	Treasury Buildings	ditto
Raman, Ganapathi Venkata	Assistant, Blackwood Bryson & Co, Ld	2, Mangoe Lane	ditto
Raman, V R Sundra, BA	Inspector, Traffic Department, E B R	3, Kaylaghat Street	ditto
Ramaswami, Madura Subramania	Clerk, Gillanders, Arbuthnot & Co	8, Clive Street	ditto
Ramaswami, V	Assistant, Remington Rand Inc	3, Council House Street	ditto
Ramaswamia, Venkatasubhiah	Head Clerk, Bengal United Service Club	29, Chowringhee	ditto
Ramchandran, T S	Assistant, Oriental Government Security Life Assurance Co, Ld	2, Clive Row	ditto
Ramdurai, Venkatisaiyar	Assistant, Andrew, Yule & Co, Ld	8, Clive Row	ditto
Ramiah, Pathai Venkata Narayana Iyer	Accountant, United Steel Companies (India), Ld	2, Avenue House, Chowringhee Square	ditto
Ranganatham, T G Ayyar	Stenographer, Burmah Shell Co of India, Ld	Hongkong House	ditto
Rangaswami, S N, BA	Clerk, Lloyds Bank, Ld	101-1, Clive Street	ditto
Rao, Alse Venkateshwara	Clerk, Northern Assurance Co, Ld	7, Hare Street	ditto
Rao, Chickaballapur Lakshmana	Assistant, Ludlow Jute Co, Ld	7, Royal Exchange Place	ditto
Rao, Gubvadi Umashanker	Clerk, Burmah Shell Co of India, Ld	Hongkong House	ditto
Rao, Halladij Vithal	Clerk, Burmah Shell Co of India Ld	Hongkong House	ditto
Rao, Krishnasamy Venkoba	Stenographer, C E's Office, E I R	E I R House	ditto
Rao, Mundkur Shrikar	Assistant, Burmah Shell Co of India, Ld	Hongkong House	ditto

No.	Names.	Style or calling.	Residence or place of business.	Religion.
	Rao, N Srinivasa	Foreman, Testing Department, C E S C, Ld	Victoria House	Hindu
	Rao, Rama Seshagiri	Stenographer, Office of H M's Senior Trade Commissioner in India	4, Fairlie Place	ditto
	Rao, Tirukalikunram Devalgar Nagoji	Assistant, Andrew, Yule & Co, Ld	8, Clive Row	ditto
	Rashid, Abdur (Maulvi)	Assistant, Bengal Secretariat, L S-G Department	Writers' Buildings	Mahomedan
	Rashid, Abdur (Maulvi)	Clerk, Office of the Inspector of Schools, Presidency Division	40-1A, Free School Street	ditto
	Rasul, Shaik Hamid, BA	Assistant, Bengal Secretariat, Revenue Department	Writers' Buildings	ditto
	Ray, Abanimohan, MA	Lecturer, City College	102-1, Amherst Street	Hindu
	Ray, Abanimohan	Accountant, Dredger Division	Charnock Place	ditto
	Ray, Abaniranjan, BSc	Assistant, Bengal Secretariat, P W D	Writers' Buildings	ditto
	Ray, A. K	Export Clerk, B I S N Co, Ld	8, Strand Road	ditto
	Ray, Amarendra Nath, MSc	Head Assistant (Lapse), Unique Assurance Co, Ld	10, Canning Street	ditto
	Ray, Amulya Charan	Sub-Head, Accounts Office, E B R	3, Koilaghat Street	ditto
	Ray, Amulya Ratan, BL	Assistant Superintendent, Unique Assurance Co, Ld	10, Canning Street	ditto
	Ray, Amulya Ratan	2nd Personal Clerk to 1st Deputy Executive Officer, Calcutta Corporation	Municipal Office	ditto
	Ray, Ananta Krishna	Draftsman, Surveyor-General's Office	13, Wood Street	ditto
	Ray, Ananta Kumar	Assistant, Planters' Stores and Agency Co, Ld	11, Clive Street	ditto
	Ray, Anil Chandra, No I	Assistant, Accountant-General's Office, Bengal	Treasury Buildings	ditto

Ray, Anil Chandra, MSc, No. II	Accountant, Accountant-General's Office, Bengal	Treasury Buildings	ditto
Ray, Anil Kumar	Clerk, Agency, E I R	E I R House	ditto
Ray, Annada Charan, BL	Inspector, License Department, Calcutta Corporation	Municipal Office	ditto
Ray, Atul Krishna	Clerk, D A G P & T Office	7, Koilaghat Street	ditto
Ray, Bankim Chandra, LT	Assistant Master, Hindu School	College Square	ditto
Ray, Bankim Chandra	Assistant, Calcutta University	Senate House	ditto
Ray, Benode Kumar	Sanitary Officer, Calcutta Corporation, District No III	Hogg Street	ditto
Ray, B B	Audit Inspector, Port Commissioners' Office	Strand Road	ditto
Ray, Bhabani Shankar	Inspector, Imperial Chemical Industries (India), Ld	18, Strand Road	ditto
Ray, Bhabataran, BSc	Assistant, Bengal Secretariat, Political Department	Writers' Buildings	ditto
Ray, Bhagwat	Clerk, C A O's Office, E I R	E I R House	ditto
Ray, Bhuban Mohan	Accountant, Bengal United Service Club	29, Chowringhee	ditto
Ray, Bhudeb Chandra	Assistant, Martin & Co	12, Mission Row	ditto
Ray, Bhujendra Krishna	Clerk, C A O's Office, E I R	E I R House	ditto
Ray, Bhupatinath, BA	Clerk, D A G P & T Office	7, Koilaghat Street	ditto
Ray, Bhupendra Bhusan	Clerk, C O P S Office, E I R	E I R House	ditto
Ray, Bhusan Chandra	Head Clerk, Office of the Superintendent, Governor's Estate, Bengal	9, Government Place, North	ditto
Ray, Bhusan Chandra	Reader, Government of India Press	8, Hastings Street	ditto
Ray, Bibhuti Bhusan	Clerk, D A G P & T Office	7, Koilaghat Street	ditto
Ray, Bilas Chandra	Head Clerk, Land Acquisition Office	5, Bankshall Street	ditto

No.	Names.	Style or calling	Residence or place of business.	Religion.
	Ray, Binaya Bhusan ..	.. Head Estimator, Office of the Superintending Engineer, S-W Circle, P W D	Treasury Buildings	Hindu
	Ray, Binaya Bhusan ..	.. Clerk, Mathematical Instrument Branch, Surveyor-General's Office	15, Wood Street	ditto
	Ray, B K ..	.. Asstt, Engineer, G E C (India), Ld	Magnet House, Central Avenue, South	ditto
	Ray, Binaya Kumar, MA, BL	.. Clerk, D A G P & T Office	7, Koilaghat Street	ditto
	Ray, Bipin Bihari, MA ..	.. Inspector, Collection Department, Calcutta Corporation ..	Municipal Office	ditto
	Ray, Biraja Kanta ..	.. Assistant, Accounts Department, Calcutta Corporation ..	Municipal office	ditto
	Ray, Biraj Kumar, BA ..	. Sub-Head, C A O's Office, E I R	E I R House	ditto
	Ray, Birendra Narayan ..	.. Cashier, Bengal Chemical and Pharmaceutical Works, Ld ..	31, Chittaranjan Avenue, South ..	ditto
	Ray, Bisheshwar ..	.. Clerk, D A G P & T Office	7, Koilaghat Street	ditto
	Ray, D C, BA ..	.. Supervisor, Central Bank of India Ld	71, Cross Street	ditto
	Ray, Debendra Nath ..	.. Clerk, Traffic Department, E B R	3, Kaylaghat Street	ditto
	Ray, Deva Kumar ..	.. Sr Assistant, Explosives Office	1, Council House Street	ditto
	Ray. Dhirendra Chandra, MSC	.. Professor, Vidyasagar College	39, Shankar Ghose Lane	ditto
	Ray, Dhirendranath, BSC	.. Cashier, Lloyds Bank, Ld	37, Chowringhee	ditto
	Ray, Dhirendra Nath ..	.. Despatcher, Calcutta Improvement Trust	3, Clive Street	ditto
	Ray, Dhirendranath	.. Estimator, Ex Engineer's Office, City Division, P W D ..	Writers' Buildings	ditto
	Ray, Dhirendra Nath ..	.. Clerk, Cox & Kings (Agents), Ld	5, Bankshall Street	ditto
	Ray, Dhirendra Nath ..	.. Head Assistant, The Hindu Mutual Life Assurance, Ld ..	309, Bowbazar Street	ditto

Ray, Dwijendranath, BA	Clerk, D A G P & T Office	7, Koilaghat Street	ditto
Ray, Ganesh Chandra	Stenographer, Imperial Chemical Industries (India), Ld	18, Strand Road	ditto
Ray, Girija Prasad	Accountant, Valvoline Oil Co	B-5, Clive Buildings	ditto
Ray, Gour Gopal, BA, BT	Assistant Master, Hare School	87, College Street	ditto
Ray, Haridas	Accountant, Sun Life of Canada	12, Dalhousie Square, East	ditto
Ray, Haridas	Establishment Clerk, C M O's Office, E I R	E I R House	ditto
Ray, Hemchandra	Assistant Accountant, Engineer's Office, District No. III, Calcutta Corporation	Hogg Street	ditto
Ray, Himangshu Bhusan	Clerk, C E E's Office, E I R	E I R House	ditto
Ray, Ishan Chandra, MA	Teacher, City School	13, Mirzapur Street	Brahmo
Ray, Jagannathdeb, BA	Assistant, Controller's Office, Calcutta University	Senate House	Hindu
Ray, Jashendra Nath	Assistant, Commercial Intelligence Department, India	1, Council House Street	ditto
Ray, Jatindra Nath	Clerk, C C M's Office, E I R	E I R House	ditto
Ray, Jatindra nath	Clerk, Telegraph Check Office	33, Dalhousie Square, South	ditto
Ray, Jatindra Nath	Hd Clerk. Imperial Bank of India	3, Strand Road	ditto
Ray, Jitendra Nath	Assistant, Reserve Bank of India	8, Council House Street	ditto
Ray, Jitendra Nath	Head Clerk. Bengal Chamber of Commerce	2, Clive Street	ditto
Ray, Jnanendra Nath	Assistant, Accounts Department, Calcutta Corporation	Municipal Office	ditto
Ray, Jnanendra Nath	Clerk, D A G P & T Office	7, Koilaghat Street	ditto
Ray, Jnanendra N	Assistant Cashier, Octavius Steel & Co, Ld	14, Old Court House Street	ditto

No.	Names.	Style or calling	Residence or place of business.	Religion.
	Ray, Jnan Ranjan, BA	Clerk, D A G P & T Office	7, Koilaghat Street	Hindu
	Ray, Jogendra Nath	Clerk, D A G P & T Office	7, Koilaghat Street	ditto
	Ray, Jogesh Chandra	Assistant, Mercantile Marine Department	15-1, Strand Road	ditto
	Ray, J P	Assistant, Jessop & Co, Ld	93, Clive Street	ditto
	Ray Kali Prasanna	Assistant, Office of the Director of Public Health, Bengal	Writers' Buildings	ditto
	Ray, Keshab Chandra	Assistant, Accountant-General's Office, Bengal	Treasury Buildings	ditto
	Ray, Khagendra Nath	Clerk, Imperial Bank of India	3, Strand Road	ditto
	Ray, Krishna Chandra	Ledger-keeper, Williamson Magor & Co	4, Mangoe Lane	ditto
	Ray, Krishna Kanta, BA	Clerk, D A G P & T Office	7, Koilaghat Street	ditto
	Ray, Kshetra Nath	Section Superintendent, Engineer's Office, E B R	3, Kaylaghat Street	ditto
	Ray, Kshitish Chandra, I, BL	Assistant, Accountant-General's Office, Bengal	Treasury Buildings	ditto
	Ray Kshitish Chandra, II, MA	Assistant, Accountant-General's Office, Bengal	Treasury Buildings	ditto
	Ray, Lalitmohan	Clerk, D A G P & T Office	7, Koilaghat Street	ditto
	Ray, Lalit Mohan, BA	Assistant, Accounts Department, Calcutta Corporation	Municipal Office	ditto
	Ray, Lalit Mohan, B COM	Accounts Clerk, Executive Engineer's Office, Western Electrical Division	Writers' Buildings	ditto
	Ray, Mana Mohan, MSC	Offg. Accountant, Accountant-General's Office, Bengal	Treasury Buildings	ditto
	Ray, Manamohan, BA	Clerk, D A G P & T Office	7, Koilaghat Street	ditto
	Ray, Manimadhab, MA	Clerk, E B R	3, Koilaghat Street	ditto
	Ray, Manindra Bhusan	Assistant, Sun Life of Canada	12, Dalhousie Square, East	ditto

Ray, Manmatha Nath, BL	Assistant, Accountant-General's Office, Bengal	Treasury Buildings	ditto
Ray, Meghendra Lal, BA	Inspector, License Department, Calcutta Corporation	Municipal Office	ditto
Ray, Nagendra Nath	Assistant, Office of the Director of Public Health, Bengal	Writers' Buildings	ditto
Ray, Nalini Bhusan, BA	Assistant, Bengal Secretariat Record Room	Writers' Buildings	ditto
Ray, Nanda Dulal	Head Clerk, Office of the Inspector of European Schools, Bengal	40-1A, Free School Street	ditto
Ray, Nanda Kumar	Clerk, D A G P & T Office	7, Koilaghat Street	ditto
Ray, Nandalal	Clerk, Telegraph Check Office	33, Dalhousie Square, South	ditto
Ray, Narayan Das	Head Clerk, License Department, Calcutta Corporation	Municipal Office	ditto
Ray, Narendra Krishna	Assistant, Bengal Secretariat, L S-G Department	Writers' Buildings	ditto
Ray, Naresh Chandra	Clerk, Agency Office, E I R	E I R House	ditto
Ray, Naresh Chandra, MA	Lecturer, City College	102-1, Amherst Street	ditto
Ray, Niranjan Ch, BA	Clerk, Telegraph Check Office	33, Dalhousie Square, South	ditto
Ray, Nirmal Chandra	Clerk, C E S C Ltd	Victoria House	ditto
Ray, Nirode Kumar, MA, BL	Officer, Hindusthan Co-operative Insurance Society, Ld	Hindusthan Buildings	ditto
Ray, Nityananda	Clerk, Telegraph Check Office	33, Dalhousie Square, South	ditto
Ray, Nripendra Nath	Clerk, Agency Office, E I R	E I R House	ditto
Ray, Panchanan, BL	Assistant, Accountant-General's Office, Bengal	Treasury Buildings	ditto
Ray, Paresh Nath, BA	Bonded Cashier, Survey of India	13, Wood Street	ditto
Ray, P C	Assistant, Mackinnon, Mackenzie & Co	8, Strand Road	ditto
Ray, Phanindra Nath	Assistant, Superintending Engineer's Office, Presy Circle, P W D	Writers' Buildings	ditto

No.	Names.	Style or calling.	Residence or place of business.	Religion.
	Ray, Phanindra Nath, BA	Assistant, Accountant-General's Office, Bengal	Treasury Buildings	Hindu
	Ray, P K	Assistant, Guest, Keen, Williams. Ld	7, Council House Street	ditto
	Ray, Prabodh Prakash	Stenographer, Bengal Secretariat, Finance Department	Writers' Buildings	ditto
	Ray, Prafulla Chandra	Assistant, Burn & Co, Ld	12, Mission Row	ditto
	Ray, Prafulla Chandra	Clerk, Telegraph Check Office	33, Dalhousie Square, South	ditto
	Ray, Prafulla Ratan	Assistant, Birla Bros, Ld	8, Royal Exchange Place	ditto
	Ray, Prahlad Chandra	Section Holder, Government of India Press	8, Hastings Street	ditto
	Ray, Pramatha Nath	Clerk, E B R	3, Koilaghat Street	ditto
	Ray, Pramatha Nath	Accountant, D J Keymer & Co, Ld	4, Lyons Range	ditto
	Ray, Prashanta Chandra, BA	Clerk, C C M's Office, E I R	E I R House	ditto
	Ray, Pratap Chandra	Clerk, D A G P & T Office	7, Koilaghat Street	ditto
	Ray, Rabindra Nath	Assistant, Bengal Secretariat, Revenue Department	Writers' Buildings	ditto
	Ray, Rajani Kanta	Cashier, G E's Office, Calcutta Division, P and A District	Fort William	ditto
	Ray, Rajendra Mohan	Cashier, Central Forms Store	166, Dharamtala Street	ditto
	Ray, Rajkumar	Head Clerk, Traffic Department, E B R	3, Kaylaghat Street	ditto
	Ray, Ram Govindo	Clerk, D A G P & T Office	7, Koilaghat Street	ditto
	Ray, Ram Lakshman	Stenographer, Office of the Controller of Purchase, Indian Stores Dept	6, Esplanade, East	ditto
	Ray, Ram Lal	Assistant, Accounts Deptt, Calcutta Corporation	Municipal Office	ditto

Ray, Rampada	Assistant, Brooke Bond (India), Ld	2, Metcalfe Street	ditto
Ray, Ramranjan	Accountant, J J C Bell & Co.	9, Clive Street	ditto
Ray, Rashbehari	Stenographer, E B R	3, Koilaghat Street	ditto
Ray, R C	Clerk, B I S N Co, Ld	8, Strand Road	ditto
Ray, Rebati Mohan	Assistant, Controller's Office, Calcutta University	Senate House	ditto
Ray, R N, BSc	Head Assistant, India Equitable Insurance Co, Ld	102, Clive Street	ditto
Ray, Saktipada	Clerk, D A G P & T Office	7, Koilaghat Street	ditto
Ray, Santosh Prasad	Clerk, Canals Divn	Treasury Buildings	ditto
Ray, Satindra Nath	Clerk, National Bank of India, Ld	104, Clive Street	ditto
Ray, Satyananda	Professor, Bangabasi College	25-1, Scott Lane	ditto
Ray, Shachindra Nath	Clerk, Lloyds Bank, Ld	101-1, Clive Street	ditto
Ray, Shachindra Nath, B.Sc	Assistant, Accountant-General's Office, Bengal	Treasury Buildings	ditto
Ray, Shachindra Nath, BA	Assistant, Patent Office	1, Council House Street	ditto
Ray, Shailendra Nath	Section Holder, Govt of India Press	8, Hastings Street	ditto
Ray, Sharat Chandra	Assistant, Accountant-General's Office, Bengal	Treasury Buildings	ditto
Ray, Sharat Chandra	Clerk, D A G P & T Office	7, Koilaghat Street	ditto
Ray, Sharat Chandra	Assistant, MacNeill & Co	2, Fairlie Place	ditto
Ray, Sharat Kumar	Assistant, Zoological Survey of India	Indian Museum	ditto
Ray, Shashanka Shekhar	Clerk, Ralli Bros, Ld	16, Hare Street	ditto
Ray, Shib Krishna	Clerk, Chief Mining Engineer's Office, Railway Board	1, Council House Street	ditto

No.	Names.	Style or calling.	Residence or place of business.	Religion.
	Ray, Shrish Chandra	Clerk, D A G P & T Office	7, Koilaghat Street	Hindu
	Ray, Shrish Chandra	Clerk, Imperial Bank of India	3, Strand Road	ditto
	Ray, Shrish Chandra	Inspector, Collection Department, Calcutta Corporation	Municipal Office	ditto
	Ray, Shrish Chandra	Clerk, Telegraph Check Office	33, Dalhousie Square, South	ditto
	Ray, Sripati Mohan	Clerk, Burmah Shell Co of India, Ld	Hongkong House	ditto
	Ray, Subodh Chandra, I, BL	Clerk, D A G P & T Office	7, Koilaghat Street	ditto
	Ray, Subodh Ch, II, BA	Clerk, D A G P & T Office	7, Koilaghat Street	ditto
	Ray, Sudhindra Nath, BA	Examiner of Accounts, Income-tax Office	6, Esplanade, East	ditto
	Ray, Sudhir Ch	Clerk, Telegraph Check Office	33, Dalhousie Square, South	ditto
	Ray, Sudhir Kumar, MSc	Demonstrator, Vidyasagar College	39, Shanker Ghose Lane	ditto
	Ray, Sudhir Kumar	Accountant, English Electric Co, Ld	D-4, Clive Buildings	ditto
	Ray, Sunil Chandra	Clerk, D A G P & T Office	7, Koilaghat Street	ditto
	Ray, Suniti Kumar, B com (Cal)	Articled Clerk, N K Roy & Co	2, Lyons Range	ditto
	Ray, Surendra Kumar	Assistant, Royal Asiatic Society of Bengal	1, Park Street	ditto
	Ray, Surendra Nath, I	Clerk, D A G P & T Office	7, Koilaghat Street	ditto
	Ray, Suresh Chandra	Librarian, Zoological Survey of India	Indian Museum	ditto
	Ray, Sushil Chandra	Assistant, Sun Life of Canada	12, Dalhousie Square, East	ditto
	Ray, Tarak Bandhu	Assistant, National Insurance Co, Ld	7, Council House Street	ditto

Ray, Taraknath, BA	Clerk, D A G P & T Office	7, Koilaghat Street	ditto
Ray, T N	Engraver, Calcutta Mint	47, Strand Road	ditto
Ray Barman, Binaya Kumar, BSC	Assistant, Accountant-General's Office, Bengal	Treasury Buildings	ditto
Ray Chaudhuri, Akshoy Kumar	Assistant, Calcutta University	Senate House	ditto
Ray Chaudhuri, A K	Audit Inspector, Port Commissioners' Office	Strand Road	ditto
Ray Chaudhuri, Amal Krishna	Assistant, Accountant-General's Office, Bengal	Treasury Buildings	ditto
Ray Chaudhuri, Anil Kumar	Assistant, Balmer, Lawrie & Co, Ld	103, Clive Street	ditto
Ray Chaudhuri, Anukul Chandra	Sub-Head, Accounts Dept, E B R	3, Kaylaghat Street	ditto
Ray Chaudhuri, Anukul Chandra	Assistant, Calcutta University	Senate House	ditto
Ray Chaudhuri, Asita Ranjan	Clerk, D A G P & T Office	7, Koilaghat Street	ditto
Ray Chaudhuri, Atul K	Ledger-keeper, Balmer, Lawrie & Co, Ltd	103, Clive Street	ditto
Ray Chaudhuri, Dhirendra Nath	Head Clerk, Imperial Tobacco Co of India, Ld	37, Chowringhee	ditto
Ray Chaudhuri, Dhirendra Nath	Clerk, Imperial Bank of India	3, Strand Road	ditto
Ray Chaudhuri, Himangshu Kumar	Genl Manager, National Cement Mines & Industries, Ld	10, Clive Row	ditto
Ray Chaudhuri, Jatindra Nath	Clerk, Imperial Bank of India	3, Strand Road	ditto
Ray Chaudhuri, Jatindra Nath	Assistant, Accountant-General's Office, Bengal	Treasury Buildings	ditto
Ray Chaudhuri, J C, MA, BL	Supervisor, Central Bank of India, Ld	71, Cross Street	ditto
Ray Chaudhuri, Karali Charan, BA	Assistant, Accountant-General's Office, Bengal	Treasury Buildings	ditto
Ray Chaudhuri, Krishna Bihari, MA, BL	Assistant, Controller's Office, Calcutta University	Senate House	ditto

No.	Names	Style or calling	Residence or place of business.	Religion.
	Ray Chaudhuri, Krishna Kinkar	Clerk, Collection Department, Calcutta Corporation	Municipal Office	Hindu
	Ray Chaudhuri, Kshitish Ch	Clerk, Marine Section, Port Commissioners	Strand Road	ditto
	Ray Chaudhuri, Kshitish Ch	Clerk, Telegraph Check Office	33, Dalhousie Sq, South	ditto
	Ray Chaudhuri, Kumud K	Head Clerk, Traffic Department, E B R	3, Koilaghat Street	ditto
	Ray Chaudhuri, Lalit Kumar	Sub-Inspector, License Department, Calcutta Corporation	Municipal Office	ditto
	Ray Chaudhuri, Manindra Nath	Assistant, Calcutta Improvement Trust	5, Clive Street	ditto
	Ray Chaudhuri, Mukul Mohan, BA	Assistant, Accountant-General's Office, Bengal	Treasury Buildings	ditto
	Ray Chaudhuri, Mukunda Lal	Hd Clerk, Traffic Department, E B R	3, Kaylaghat Street	ditto
	Ray Chaudhuri, N, Bsc.	Asstt Master, Armenian College	39, Free School Street	ditto
	Ray Chaudhuri, Nirmal K	Genl Store-keeper, Govt of India Press	8, Hastings Street	ditto
	Ray Chaudhuri, Panchanan	Reader, Government of India Press	8, Hastings Street	ditto
	Ray Chaudhuri, Panchanan Kinkar, BL	Inspector, License Department, Calcutta Corporation	Municipal Office	ditto
	Ray Chaudhuri, P C	Clerk, Office of the Chief Mining Engineer, Railway Board	1, Council House Street	ditto
	Ray Chaudhuri, Prafulla Chandra	Clerk, Government Factory Inspection Department, Bengal	40-1A, Free School Street	ditto
	Ray Chaudhuri, Prafulla Nath	Assistant, Bird & Co	1-1, Clive Street	ditto
	Ray Chaudhuri, Prithvish Chandra	Inspector, Collection Department, Calcutta Corporation	Municipal Office	ditto
	Ray Chaudhuri, Radhanath	Clerk, D A G P & T Office	7, Koilaghat Street	ditto
	Ray Chaudhuri, Radharaman, BA	Clerk, Collection Department, Calcutta Corporation	Municipal Office	ditto
	Ray Chaudhuri, Rajendra Nath	Stenographer, I T Office	3, Government Place, West	ditto

Ray Chaudhuri, Santosh Nath	Assistant, A-G's Office, Bengal	Treasury Buildings	ditto
Ray Chaudhuri, Shailendra Nath, BL	Clerk, Collection Department, Calcutta Corporation	Municipal Office	ditto
Ray Chaudhuri, Shamadas	Assistant, Bird & Co	1-1, Clive Street	ditto
Ray Chaudhuri, Shambhu Chandra	Assistant Estimator, Calcutta Improvement Trust	5, Clive Street	ditto
Ray Chaudhuri, S N	Assistant, Oriental Government Security Life Assurance Co, Ld	2, Clive Row	ditto
Ray Chaudhuri, Suresh Chandra	Assistant, Calcutta Improvement Trust	5, Clive Street	ditto
Ray Chaudhuri, Sushil Chandra	Assistant, McLeod & Co	28, Dalhousie Square	ditto
Rezwi, Taher	Lecturer, Presidency College	86-1, College Street	Mahomedan
Rhotgi, M L	Broker, H J Foster & Co, Ld	Sassoon House	Hindu
Rout, Charu Chandra	Assistant, Balmer, Lawrie & Co, Ld	103, Clive Street	Christian
Rout, Tarini Bhusan, BA	Assistant, A-G's Office, Bengal	Treasury Buildings	Hindu
Rub, Abdur (Maulvi)	Head Clerk, Income-tax Office	6, Esplanade, East	Mahomedan
Rudra, Shailendra Nath	Clerk, Telegraph Check Office	33, Dalhousie Square South	Hindu
S			
Sadhu, Amiya Nath	Assistant, National Insurance Co, Ld	7, Council House Street	Hindu
Sadhu, Manilal	Coal Department-in-charge, Williamson, Magor & Co	4, Mangoe Lane	ditto
Sadhu, Robindra Nath	Clerk, Burmah Shell Co of India, Ld	Hongkong House	ditto
Sadhu, Siddheshwar	Cashier, Govan Bros, Ld	20, Park Street	ditto
Sadhu, Umapada	Assistant, Calcutta University	Senate House	ditto
Sadhukhan, Matilal	Assistant, Accountant-General's Office, Bengal	Treasury Buildings	ditto

No.	Names.	Style or calling.	Residence or place of business.	Religion
	Saha, Dhirendra Krishna	Engraver, Survey of India	13, Wood Street	Hindu
	Saha, Dhirendra M, BSc (Glas)	Lighting Supervisor, Calcutta Corporation	Municipal Office	ditto
	Saha, Gopal Chandra, BSc, GDA	Accountant, Bhattacharjee & Co	28, Pollock Street	ditto
	Saha, Gopi Jiban	Engraver, Survey of India	13, Wood Street	ditto
	Saha, Narbheram Tulsidas	Assistant, Jewanlal (1929), Ld	101, Clive Street	Jain
	Saha, Nathalal Jivraj	Assistant, Jewanlal (1929), Ld	101, Clive Street	Hindu
	Saha, Prafulla Nath	Assistant, Office of the Director of Industries, Bengal	40-1A, Free School Street	ditto
	Saha, Radhakrishna	Assistant, Bengal Chemical & Pharmaceutical Works, Ld	31, Chittaranjan Avenue, South	ditto
	Saha, Sachchidananda	Assistant, Holmes, Wilson & Co, Ld	Norton Buildings	ditto
	Saha, Sudhir Kumar	Clerk, D A G P & T Office	7, Koilaghat Street	ditto
	Saha, Suresh Chandra, BA	Clerk, D A G P & T Office	7, Koilaghat Street	ditto
	Saha, Suresh Chandra	Assistant, Accountant-General's Office, Bengal	Treasury Buildings	ditto
	Saha, Susil Kumar	Clerk, D A G P & T Office	7, Koilaghat Street	ditto
	Saha, Susil Kumar	Steno-typist, W. T Henley's Telegraph Works Co, Ld	Old Court House Corner	ditto
	Saha, Tarapada	Clerk, Telegraph Check Office	33, Dalhousie Square, South	ditto
	Saha, Upendra Nath	Under-Broker, F C Pallachi & Co	7, Royal Exchange Place	ditto
	Salamatulla, M	Assistant, Bengal Secretariat, Irrigation Department	Writers' Buildings	Mahomedan
	Salim, Shah A S	Assistant Master, Calcutta Madrassah	19, Wellesley Square	ditto
	Sama, Kandadi Subramania	Assistant, Commercial Credit Corporation, Ld	20, Park Street	Hindu

Samad, Abdus (Maulvi), MA	Lecturer, Islamia College	8, Wellesley Street	Mahomedan
Samad, Abdus (Kazi)	Assistant, Agriculture and Industries Department, Bengal	Writers' Buildings	ditto
Samaddar, Shibendra Nath, BA	Clerk, D A G P & T Office	7, Koilaghat Street	Hindu
Samanta, Chandra Madhab	Assistant, Bengal Chemical & Pharmaceutical Works, Ld	31, Chittaranjan Avenue, South	ditto
Samanta, Harinarayan, BSc	Bill Overseer, Calcutta Corporation, D E I	79, Cornwallis Street	ditto
Samanta, Paban Chandra	Clerk, D A G P & T Office	7, Koilaghat Street	ditto
Sampat, M D	Assistant, National Insurance Co, Ld	7, Council House Street	ditto
Sanghota, B S	Special Inspector, Traffic Deptt, E B R	3, Koilaghat Street	Sikh
Sankar, Kadayam Gopal	Assistant, Imperial Library	6, Esplanade, East	Hindu
Sankaran, N S	Assistant, Guest, Keen, Williams, Ld	7, Council House Street	ditto
Sankernarain, T R	Assistant, Bird & Co	1-1, Clive Street	ditto
Santra, Panchanan	Accountant, Begg, Dunlop & Co, Ld	2, Hare Street	ditto
Sanyal, Abinash Chandra	Head Despatcher, Photo-Litho Branch, Surveyor-General's Office	14, Wood Street	ditto
Sanyal, A K	Merchant	1, British Indian Street	ditto
Sanyal, Ananta Lal, BSc	Assistant Accountant-General's Office, Bengal	Treasury Buildings	ditto
Sanyal, Bishwa Ranjan, BA	Assistant, Bengali Translator's Office	Writers' Buildings	ditto
Sanyal, Dilip Kumar, MA	Lecturer, Vidyasagar College	39, Shankar Ghose Lane	ditto
Sanyal, Harendra Nath	Assistant, Cox & Kings (Agents), Ld	5, Bankshall Street	ditto
Sanyal, Hiran Kumar, MA	Assistant Editor, Bengal Co-operative Journal	102-1, Clive Street	Brahmo
Sanyal, Kamál Kumar, BA	Assistant, Accountant-General's Office, Bengal	Treasury Buildings	Hindu
Sanyal, K C, MSc	Demonstrator, St Paul's College	33/1, Amherst Street	ditto

No.	Names.	Style or calling.	Residence or place of business.	Religion.
	Sanyal, Lalit Mohon ..	.. Stenographer, Burmah Shell Co of India, Ld ..	.. Hongkong House ..	.. Hindu
	Sanyal, Manindra Nath, BA, BT	.. Assistant Master, Bethune Collegiate School ..	.. 181, Cornwallis Street ..	.. ditto
	Sanyal, Manoshija, MA ..	.. Assessing Inspector, Calcutta Corporation ..	.. Municipal Office ..	.. ditto
	Sanyal, Manmatha Nath	.. Assistant, The Eastern Bank, Ld	.. 9, Clive Street ..	.. ditto
	Sanyal, Naresh Chandra	.. Director, The New Bengal Bank, Ld	.. 15, Clive Street ..	.. ditto
	Sanyal, Ramlal, MA ..	.. Assistant, A-G's Office, Bengal	.. Treasury Buildings ..	.. ditto
	Sanyal, Shailendra Nath, BA	.. Salesman, Dodge & Seymour, Ld	.. Tower House, Chowringhee Square ..	ditto
	Sanyal, Siddhinath ..	.. Cashier, Phœnix Assurance Co, Ld	.. 28, Dalhousie Square ..	.. ditto
	Sanyal, Sujanendra ..	.. Assistant, Balmer, Lawrie & Co, Ld	.. 103, Clive Street ..	.. ditto
	Sanyal, Tarapada, MA, BT	.. Assistant Master, Hindu School	.. College Square ..	.. ditto
	Sarangan, Appaswami ..	.. Assistant, Corn Products Co (India), Ld ..	.. 4, Lyons Range ..	.. ditto
	Sarbadhikary, Nagendra Kumar	.. Reader, *Statesman*, Ld	.. Statesman House ..	.. ditto
	Sardar, Gunasindhu, MSc ..	.. Assistant Master, Sanskrit Collegiate School ..	.. College Square ..	.. ditto
	Sardar, Mahomed Abdullah	.. Assistant, Bengal Secretariat, P W D	.. Writers' Buildings ..	.. Mahomedan
	Sarkar, Abdul Latiff ..	.. Second Clerk, Office of the Inspector of European Schools, Bengal.	40-1A, Free School Street ..	ditto
	Sarkar, Abinash Chandra	.. Supervisor, Drainage, Calcutta Corporation ..	.. Municipal Office ..	.. Hindu
	Sarkar, Ajar Chandra ..	.. Assistant, Calcutta University	.. Senate House ..	.. ditto
	Sarkar, A K, MSc ..	.. Demonstrator, St. Paul's College	.. 33-1, Amherst Street ..	.. ditto
	Sarkar, A. K, BA ..	.. Divisional Accountant, A-G's Office, Bengal ..	.. Treasury Buildings ..	.. ditto
	Sarkar, Akshaya Kumar	.. Assistant, Calcutta Improvement Trust	.. 5, Clive Street ..	.. ditto

Sarkar, Amulya Ratan ..	Clerk, Agency Office, E I R	E I R House	ditto
Sarkar, Anukul Chandra ..	Demonstrator, Presidency College	86-1, College Street	ditto
Sarkar, Ardhendu Shekhar ..	Assistant Cashier, North British and Mercantile Insurance Co, Ld	101-1, Clive Street	ditto
Sarkar, Ashutosh	Assistant, National Insurance Co, Ld	7, Council House Street	ditto
Sarkar, Atul Krishna	Head Clerk, Fire Reinsurance Department, New Zealand Insurance Co, Ld	26, Dalhousie Square	ditto
Sarkar, Atul Krishna	Clerk, D A G P & T Office	7, Koilaghat Street	ditto
Sarkar, Bhabendra Kumar ..	Clerk, Martin & Co	12, Mission Row	ditto
Sarkar, Bhola Nath	Assistant, Office of the Director of Public Instruction, Bengal ..	Writers' Buildings	ditto
Sarkar, Bibhuti Bhusan ..	Clerk, D A G P & T Office	7, Koilaghat Street	ditto
Sarkar, Bibhuti Bhusan ..	Clerk, Booking Section, Port Commissioners	Strand Road	ditto
Sarkar, Bijaya Bhusan, BL ..	Clerk, Assessor's Department, Calcutta Corporation	Municipal Office	ditto
Sarkar, Bijaya Kumar, MA ..	Examiner of Accounts, Income-tax Office	6, Esplanade, East	ditto
Sarkar, Binaya Kumar BA ..	Clerk, D A G P & T Office	7, Koilaghat Street	ditto
Sarkar, Birendra N	Assistant, Balmer Lawrie & Co, Ld	103, Clive Street	ditto
Sarkar, Bishnupada	Assistant, Bengal Secretariat Record Room	Writers' Buildings	ditto
Sarkar, Bissheshwar	Clerk, Shaw, Wallace & Co	4, Bankshall Street	ditto
Sarkar, Brojendra Nath	Assistant, Lionel Edwards, Ld	D-1, Clive Buildings	ditto
Sarkar, Chandi Charan	Salesman, Adair, Dutt & Co, Ld	5, Dalhousie Square	ditto
Sarkar, Charu Chandra	Assistant Accountant-General's Office, Bengal	Treasury Buildings	ditto

No.	Names	Style or calling.	Residence or place of business.	Religion.
	Sarkar, Dhirendra Nath ..	.. Clerk, Martin & Co	.. 12, Mission Row	Hindu
	Sarkar, Harasundar, MA ..	.. Clerk, D A G P & T Office	.. 7, Koilaghat Street	ditto
	Sarkar, Haridas ..	.. Assistant, Bengal Secretariat, Revenue Department	.. Writers' Buildings	ditto
	Sarkar, Harilal ..	.. Assistant, Bengal Secretariat, Commerce Department	.. Writers' Buildings	ditto
	Sarkar, Hari Narayan ..	.. Surveyor and Estimator, Calcutta Corporation ..	.. Municipal Office	ditto
	Sarkar, Haripada ..	.. Head Assistant, I R G P & T W Co, Ld ..	.. 7, Old Court House Street ..	ditto
	Sarkar, Harisadhan ..	.. Overseer, Calcutta Improvement Trust	.. 5, Clive Street	ditto
	Sarkar, Harisadhan ..	.. Assistant, Accountant-General's Office, Bengal ..	.. Treasury Buildings	ditto
	Sarkar, Harish Chandra, BA	.. Clerk, D A G P & T Office	.. 7, Koilaghat Street	ditto
	Sarkar, Hem Chandra ..	.. Assistant, Commercial Intelligence Department ..	.. 1, Council House Street	ditto
	Sarkar, Heramba Chandra	.. Stenographer, Income-tax Office	.. 3, Government Place West ..	ditto
	Sarkar, Jagadish Chandra	.. Accountant, George, Spencer, Moulton & Co (India), Ld	.. 8, Esplanade, East	ditto
	Sarkar, Jatindra Mohan	.. Clerk, D A G P & T Office	.. 7, Koilaghat Street	ditto
	Sarkar, Jitendra Nath ..	.. Stenographer, Engineering Department, E B R ..	.. 3, Koilaghat Street	ditto
	Sarkar, Jitendra Nath ..	.. Salesman, Volkart Brothers	.. 11, Clive Street	ditto
	Sarkar, Kalicharan ..	.. Checking Assistant, Imperial Bank of India ..	.. 3, Strand Road	ditto
	Sarkar, Kartic Chandra ..	.. Assistant, Lionel Edwards, Ld	.. D-1, Clive Buildings	ditto
	Sarkar, Karunamaya ..	.. Assistant, Office of the Director of Public Health, Bengal	.. Writers' Buildings	ditto
	Sarkar, K C, RA ..	.. Assistant, S R Batliboi & Co	.. 1-B, Old Post Office Street ..	ditto

Sarkar, Khagendra Nath	Assistant Accountant, Hindusthan Co-operative Insurance Society, Ld.	Hindusthan Buildings		ditto
Sarkar, Khagendra Nath	Clerk, Ralli Bros, Ld	16, Hare Street		ditto
Sarkar, Kishori Mohan, BA	Accounts Clerk, E B R	3, Koilaghat Street		ditto
Sarkar, Krishna Lal, BA	Clerk, D A G P & T Office	7, Koilaghat Street		ditto
Sarkar, Kumud Nath	Lighting Inspector, Calcutta Corporation	Municipal Office		ditto
Sarkar, Lalmohan	Director, Incorporated Insurance, Ld	5, Clive Ghat Street		ditto
Sarkar, Manaranjan,	Food Inspector, Calcutta Corporation (D IV)	91, Durga Ch Doctor Lane		ditto
Sarkar, Mani Mohan	Sanitary Officer, Calcutta Corporation	22, Mirzapore Street		ditto
Sarkar, Manindra Nath, BA	Assistant, Accountant-General's Office, Bengal	Treasury Buildings		ditto
Sarkar, Manmatha Nath	Assistant, Burn & Co, Ld	12, Mission Row		Brahmo
Sarkar, Manmohan	Steno-Typist, W T, Henley's Telegraph Works, Co. Ld	Old Court House Corner		Hindu
Sarkar, Monotosh Kumar	Assistant, James Finlay & Co, Ld	1, Clive Street		ditto
Sarkar, Mati Lal	Assistant, McLeod & Co	28, Dalhousie Square		ditto
Sarkar, Mati Lal	Clerk, Central Forms Store	166, Dharamtala Street		ditto
Sarkar, Nalin Bihari	Head Clerk, Fire Department, New Zealand Insurance Co, Ld	26, Dalhousie Square		ditto
Sarkar, Nalini Nath, BA	Inspector, License Department, Calcutta Corporation	Municipal Office		ditto
Sarkar, Nani Gopal	Assistant, National Insurance Co, Ld	7, Council House Street		ditto
Sarkar, Narayan Das, BL	Inspector, License Department, Calcutta Corporation	Municipal Office		ditto
Sarkar, Naresh Chandra	Clerk, C E S C Ld	Victoria House		ditto
Sarkar, Nishi Kanta	Clerk, D A G P & T Office	7, Koilaghat Street		ditto
Sarkar, N L	Assistant, Guest, Keen, Williams, Ld	7, Council House Street		ditto

No.	Names.	Style or calling.	Residence or place of business.	Religion
	Sarkar, Noujesh Ali, BSC	Assistant, Bengal Secretariat, Accounts Deptt	Writers Buildings	Hindu
	Sarkar, Pabitraranjan	Officer, Hindusthan Co-operative Insurance Society, Ltd	Hindusthan Buildings	ditto
	Sarkar, Panchu Lal	Salesman, I R G P & T W Co, Ld	7, Old Court House Street	ditto
	Sarkar, Phanindra Nath	Assistant, Accountant-General's Office, Bengal	Treasury Buildings	ditto
	Sarkar, Prafulla Kumar, MA, BT	Assistant Head Master, Calcutta Training School	8, European Asylum Lane	ditto
	Sarkar, Pran Kumar	Clerk, Calcutta Improvement Trust	5, Clive Street	ditto
	Sarkar, Rajendra Nath	Clerk, Martin & Co	12, Mission Row	ditto
	Sarkar, Rampada	Clerk, Royal Calcutta Turf Club	11, Russell Street	ditto
	Sarkar, Ramesh Chandra	Estimator, Government of India Press	8, Hastings Street	ditto
	Sarkar, Ramrenu, BA	Assistant, Income-tax Office	6, Esplanade, East	ditto
	Sarkar, Sailesh Chandra	Building Inspector, Calcutta Corporation	Municipal Office	ditto
	Sarkar, Satish Chandra	Assessing Inspector, Calcutta Corporation	Municipal Office	ditto
	Sarkar, Satish Chandra, MA	Assistant, Accountant-General's Office, Bengal	Treasury Buildings	ditto
	Sarkar, Satish Chandra	Accountant, Office of the Superintendent, Governor's Estates	9, Government Place, North	ditto
	Sarkar, Satya Charan	Clerk, Shaw, Wallace & Co	4, Bankshall Street	ditto
	Sarkar, Shachindra Nath	Clerk, C A O's Office, E I R	E I R House	ditto
	Sarkar, Shachindra Kumar	Assistant, Commercial Intelligence Deptt	1, Council House Street	ditto
	Sarkar, Shailendra Nath	Clerk, Traffic Deptt, E B R	3, Koilaghat Street	ditto
	Sarkar, Sharat Chandra	Assistant, Mathematical Instrument Office	15, Wood Street	ditto
	Sarkar, Shishir Kumar	Assistant, Lovelock & Lewes	4, Lyons Range	ditto

Sarkar, Shyama Charan, BA	Clerk, D A G P & T Office	7, Koilaghat Street	ditto
Sarkar, Sourendra Mohan	Clerk, D A G P & T Office	7, Koilaghat Street	ditto
Sarkar, Sudhir Kumar, MA	Assistant, Reserve Bank of India	8, Council House Street	ditto
Sarkar, Sushil Kumar	Offg. Accountant, A-G's Office, Bengal	Treasury Buildings	ditto
Sarkar, Tarapada	Clerk, Calcutta Improvement Trust	5, Clive Street	ditto
Sarkar, Tinkari	Assistant, Office of the Controller of Currency	Treasury Buildings	ditto
Sarkar, Tulsi Charan, BA	Accounts Clerk, E B R	3, Koilaghat Street	ditto
Sarkar, Wajed Ali, BA	Assistant, Bengal Secretariat, Finance Department	Writers' Buildings	Mahomedan
Sarkel, Prabhat Chandra, BA	Assistant, Acccountant General's Office, Bengal	Treasury Buildings	Hindu
Sarowar, Md. Gholam, BA	Assistant, Accountant General's Office, Bengal	Treasury Buildings	Mahomedan
Sasmal, K C	Assistant, Jessop & Co, Ld	93, Clive Street	Hindu
Sattar, Abdus, BA	Examiner of Accounts, Income-tax Office	6, Esplanade, East	Mahomedan
Savant, A B	Fire Department, British India General Insurance Co, Ld	Norton Buildings	Hindu
Seal, A T	Assistant, P & O Banking Corporation, Ld	1, Fairlie Place	ditto
Seal, Balai Chand, M COM	Clerk, D A G P & T Office	7, Koilaghat Street	ditto
Seal, Bepin Behari	Manager, John S Elmore, Ld	7, Bowbazar Street	ditto
Seal, Bijaya Krishna	Deputy Cashier, Gillanders, Arbuthnot & Co	8, Clive Street	ditto
Seal, Bijaya Krishna, BA	Assistant, Bengal Secretariat, P W D	Writers' Buildings	ditto
Seal, Gour Chand	Clerk, D A G P & T Office	7, Koilaghat Street	ditto

No.	Names.	Style or calling.	Residence or place of business.	Religion.
	Seal, Harendra Nath	Estimator and Designer, Martin & Co	12, Mission Row	Hindu
	Seal, Jagannath	Clerk, Burmah Shell Co of India, Ld	Hongkong House	ditto
	Seal, Keshab Chandra	Assistant, Accountant-General's Office, Bengal	Treasury Buildings	ditto
	Seal, Krishna Lal	Clerk, Ralli Brothers, Ld	16, Hare Street	ditto
	Seal, Krishna Lal	Book-keeper, Harrisons & Crosfield, Ld	6, Church Lane	ditto
	Seal, Lalit Mohan	Clerk, Telegraph Check Office	33, Dalhousie Square South	ditto
	Seal, Madan Mohan	Clerk, Imperial Bank of India	3, Strand Road	ditto
	Seal, Mani Mohan	Assistant, Begg Dunlop & Co, Ld	2, Hare Street	ditto
	Seal, Mukta Lal	Head Assistant, Sec V, Accounts Department, Calcutta Corporation.	Municipal Office	ditto
	Seal, Nitai Chand	Clerk, Chartered Bank of India, Australia and China	1-1, Clive Street	ditto
	Seal, Paresh Nath	Clerk, Traffic Deptt, E B R	3, Koilaghat Street	ditto
	Seal, Prabodh Chandra	Assistant, Balmer, Lawrie & Co, Ld	103, Clive Street	ditto
	Seal, Rash Behari	Assistant, Reserve Bank of India	8, Council House Street	ditto
	Seal, Sharat Chandra	Accountant, Accountant-General's Office, Bengal	Treasury Buildings	ditto
	Seal, Sharat Chandra	Assistant, Lionel Edward, Ld	D-1, Clive Buildings	ditto
	Sen, Abani Nath, BA	Clerk, Telegraph Check Office	33, Dalhousie Square, South	ditto
	Sen, Ajit Narayan	Overseer, Government of India Press	8, Hastings Street	ditto
	Sen, Amulya Chandra	Hd Clerk, Imperial Bank of India, Clive Street Branch	8, Clive Street	ditto

Sen, Amulya Charan	Assistant, Price, Waterhouse, Peat & Co	B-4, Clive Buildings	ditto
Sen, Amulya Charan	Security Clerk, Stewart & Co	8, Clive Street	ditto
Sen, Amulya Kumar	Clerk, Macmillan & Co, Ld	294, Bowbazar Street	ditto
Sen, Amulya Kumar	Clerk, Imperial Bank of India	3, Strand Road	ditto
Sen, Anath Nath	Assistant, Office of the I-G of Registration, Bengal	Writers' Buildings	ditto
Sen, Anil Chandra	Assistant, Office of the Private Secretary to H E the Governor of Bengal.	Government House	ditto
Sen, Arunmaya	Clerk, Ralli Brothers, Ld	16, Hare Street	ditto
Sen, Asharanjan	Assistant, Office of the Inspector-General of Prisons, Bengal	Writers' Buildings	ditto
Sen, Atul Chandra	Instructor, Government Commercial Institute	11, Hastings Street	ditto
Sen, Atul Krishna	Assistant Cashier, Accountant General's Office, Bengal	Treasury Buildings	ditto
Sen, Bata Krishna, MA	Assistant, Commercial Intelligence and Statistics Deptt	1, Council House Street	ditto
Sen, Bhujendra Bhusan	Stenographer, Land Acquisition Office	5, Bankshall Street	ditto
Sen, Bijan Bihari, MA	Assistant Accountant, Central Bank of India, Ld	10, Lindsay Street	ditto
Sen, Bijayapada	Assistant, Andrew, Yule & Co, Ld	8, Clive Row	ditto
Sen, Birendra Lal	Computor, C E's Office, E I R	E I R House	ditto
Sen, Birendra Nath	Assistant, Calcutta Improvement Trust	5, Clive Street	ditto
Sen, Bireshwar	Clerk, C A O's Office, E I R	E I R House	ditto
Sen, Braja Nath	Head Clerk (Sales), I B P Co, Ld	8, Clive Street	ditto
Sen, Brajendra Nath	Organiser, The Bharat Insurance Co, Ld	Chittaranjan Avenue	ditto
Sen, Chandi Charan, BA	Assistant, Reserve Bank of India	8, Council House Street	ditto

No.	Names.	Style or calling.	Residence or place of business.	Religion.
	Sen, Debendra Nath	Clerk, Watch & Ward Department, E I R	E I R House	Hindu
	Sen, Debendra Nath	Personal Assistant to the I-G of Registration	Writers' Buildings	ditto
	Sen, Dhirendra Nath	Assistant, Bird & Co	1-1, Clive Street	ditto
	Sen, Dulichand	Cashier, Bombay Co, Ld	19, British Indian Street	ditto
	Sen, Dwijendra Nath	Assistant, Office of the Director of Public Instruction, Bengal	Writers' Buildings	ditto
	Sen, D K	Assistant, Balmer Lawrie & Co, Ld	103, Clive Street	ditto
	Sen, Gokul Chandra	Clerk, B R Section, Port Commissioners' Office	Strand Road	ditto
	Sen, Gokul Chandra	Invoice Clerk, Begg, Dunlop & Co, Ld	2, Hare Street	ditto
	Sen, Gorachand, BL	Court Clerk, C C M's Office, E I R	E I R House	ditto
	Sen, Gour Chandra	Assistant, Accountant-General's Office, Bengal	Treasury Buildings	ditto
	Sen, Gour Kishore	Assistant, Income-tax Office	6, Esplanade, East	ditto
	Sen, Haridas	Assistant, Mackinnon, Mackenzie & Co	16, Strand Road	ditto
	Sen, Haripada	Assistant, Mackinnon, Mackenzie & Co	16, Strand Road	ditto
	Sen, Hari Prasad	Head Clerk, Photo-Litho Branch, Surveyor-General's Office	14, Wood Street	ditto
	Sen, Hemanta Kumar M.A.	Lecturer, Government Commercial Institute	11, Hastings Street	ditto
	Sen, Hemanta Kumar	Assistant, J Thomas & Co	8, Mission Row	ditto
	Sen, Hem Chandra, BL	Inspector, License Department, Calcutta Corporation	Municipal Office	ditto
	Sen, Hiralal	Assistant, Accountant-General's Office, Bengal	Treasury Buildings	ditto
	Sen, Jogesh Chandra, BA	Assistant, Income-tax Office	3, Government Place, West	ditto

Sen, Jugal Kishore	Examiner, Imperial Bank of India	3, Strand Road	ditto
Sen, Jyotish Chandra	Superintendent, Bills Dept, Central Bank of India, Ld	100, Clive Street	ditto
Sen, Jyotish Chandra, BSC	Head Master, Brahmo Boys' School	31, Jhamapukur Lane	Brahmo
Sen, Kanta Nath	Instructor, Government Commercial Institute	11, Hastings Street	Hindu
Sen, Karunamaya	Assistant, Lovelock & Lewes	4, Lyons Range	ditto
Sen, Kausiki Kumar	Clerk, Agent's Office, E I R	E I R House	ditto
Sen, Kedar Nath	Clerk, Calcutta Improvement Trust	5, Clive Street	ditto
Sen, Keshab Chandra	Ledger-keeper, Bombay Co, Ld	19, British Indian Street	ditto
Sen, Keshab Chandra	Sr Clerk, Harrisons & Crosfield, Ld	6, Church Lane	ditto
Sen, Kiran Chandra	Assistant, Calcutta University	Senate House	ditto
Sen, Krishna Bihari	Clerk, C M E's Office, E I R	E I R House	ditto
Sen, Kshirode Chandra	Clerk, Assessor's Department, Calcutta Corporation	Municipal Office	ditto
Sen, Kshitindra Nath, BL	Assistant Secretary, Great India Insurance, Ld	14, Clive Street	ditto
Sen, Kushendra Lal	Clerk, Kilburn & Co	4, Fairlie Place	ditto
Sen, Lakshman Chandra	Clerk, Telegraph Check Office	33, Dalhousie Square, South	ditto
Sen, Lakshmi Kanta	Clerk, Ralli Brothers, Ld	16, Hare Street	ditto
Sen, Makhan Gopal BA	Clerk, D A G P & T Office	7, Koilaghat Street	ditto
Sen, Mani Bhusan, BSC	Assistant, Accountant-General's Office, Bengal	Treasury Buildings	ditto
Sen, Manik Lal	Clerk, C E's Office, E I R	E I R House	ditto
Sen, Manmatha Nath	Assistant, Queensland Insurance Co, Ld	6, Royal Exchange Place	ditto
Sen, Manmatha Nath	Ledger-keeper, Bombay Co, Ld	19, British Indian Street	ditto
Sen, Manmatha Ranjan	Clerk, Telegraph Check Office	33, Dalhousie Square, South	ditto

No.	Names.	Style or calling.	Residence or place of business.	Religion.
	Sen, Manonit	Clerk, Traffic Department, E B R	3, Koilaghat Street	Hindu
	Sen, Mihir Kumar, MA	Professor, Vidyasagar College	39, Sankar Ghose Lane	ditto
	Sen, Nagendra Nath, B SC	Divisional Accountant, Accountant-General's Office, Bengal	Treasury Buildings	ditto
	Sen, Nagendra Nath	Accountant, Office of the Superintendent, Governor's Estates	Government House	ditto
	Sen, Nandalal (Dr), LMS	Food Inspector, Calcutta Corporation	22, Mirzapore Street	ditto
	Sen, Narendra Lal	Assistant, Controller's Office, Calcutta University	Senate House	ditto
	Sen, Narendra Narayan	Audit Inspector, Port Commissioners' Office	Strand Road	ditto
	Sen, Narendra Nath	Clerk, Office of the Chief Mining Engineer, Railway Board	1, Council House Street	ditto
	Sen, Narendra Nath	Assistant, Presidency College	86-1, College Street	ditto
	Sen, Naresh Chandra	Assistant, Accountant-General's Office, Bengal	Treasury Buildings	ditto
	Sen, Netai Charan, BA	Assistant, Bengal Secretariat, Appointment Department	Writers' Buildings	ditto
	Sen, Nil Kamal	Accountant, D J Keymer & Co	4, Lyons Range	ditto
	Sen, Nilratan	Clerk, Imperial Bank of India	3, Strand Road	ditto
	Sen, Nirmal Krishna, BSc, BL	Assistant Head Master, Oriental Seminary	336, Upper Chitpore Road	ditto
	Sen, Nripendra Nath	Clerk, Jardine, Skinner & Co	4, Clive Row	ditto
	Sen, O A V	Assistant, Gillanders, Arbuthnot & Co	8, Clive Street	Christian
	Sen, Panchanan	Stenographer, Lloyds Bank, Ld	101-1, Clive Street	Hindu
	Sen, Panchanan	Assistant, Commercial Intelligence Department, India	1, Council House Street	ditto
	Sen, Panchanan	Assistant, Accountant-General's Office Bengal	Treasury Buildings	ditto
	Sen, Panchanan	Assistant, Bengal Secretariat, Police Department	Writers' Buildings	ditto
	Sen, Panchkari	Assistant, Bengal Secretariat, Political Department	Writers' Buildings	ditto

Sen, Pashupati Nath, BA	Inspector, License Department, Calcutta Corporation	Municipal Office	ditto
Sen, Prafulla Chandra	Clerk, Northern Assurance Co, Ld	7, Hare Street	ditto
Sen, Prafulla Kumar	Head Clerk, Mechanical Department, E B R	3, Koilaghat Street	ditto
Sen, Prafulla Kumar	Clerk, Imperial Bank of India	3, Strand Road	ditto
Sen, Prafulla Kumar	Clerk, Union Insurance Society of Canton, Ld	8, Clive Street	ditto
Sen, Pransanker	Clerk, Telegraph Check Office	33, Dalhousie Square, South	ditto
Sen, Priya Nath	Cashier, Anderson Wright & Co	22, Strand Road	ditto
Sen, Purna Chandra	Journalist, *Statesman*, Ld	Statesman House	ditto
Sen, Rajendra Nath, BA	Programme Assistant, All India Radio	1, Garstin Place	ditto
Sen, Rajkumar, MSc	Professor, Vidyasagar College	39, Shankar Ghose Lane	ditto
Sen, Ramesh Chandra	Assistant, Office of the Director of Public Instruction, Bengal	Writers' Buildings	ditto
Sen, Ramesh Chandra	Assistant, Controller's Office, Calcutta University	Senate House	ditto
Sen, Rash Behari	Cashier (Collection), Port Commissioners' Office	Strand Road	ditto
Sen, R C	Assistant, Stewart & Co, Ld	57, Park Street	ditto
Sen, Sati Prasad	Assistant, Mackinnon, Mackenzie & Co	16, Strand Road	ditto
Sen, Satish Chandra	Sub-Head, Accounts Office, E B R	3, Koilaghat Street	ditto
Sen, Satish Chandra	Clerk, Ralli Brothers, Ld	16, Hare Street	ditto
Sen, Satish Chandra	Estimator, Calcutta Improvement Trust	5, Clive Street	ditto
Sen, Satish Chandra	Assistant, Office of the Inspector-General of Police	Writers' Buildings	ditto

No.	Names.	Style or calling.	Residence or place of business.	Religion.
	Sen, Satish Chandra	Cashier, Commercial Union Assurance Co, Ld	32, Dalhousie Square	Hindu
	Sen, Satya Narayan	Clerk, Imperial Bank of India	3, Strand Road	ditto
	Sen, Sharat Chandra	Assistant, Bengal Legislative Council	Council House	ditto
	Sen, Shailendra Nath	Clerk, D A G P & T Office	7, Koilaghat Street	ditto
	Sen, Shailendra Nath	Assistant, Macneill & Co	2, Fairlie Place	ditto
	Sen, Shailendra Nath	Assistant, Andrew, Yule & Co, Ld	8, Clive Row	ditto
	Sen, Shailendra Nath	Assistant, Photo Litho Branch Surveyor-General's Office	14, Wood Street	ditto
	Sen, Shaileshwar, BA, BL	Assistant, Commercial Intelligence Deptt, India	1, Council House Street	ditto
	Sen, Shashi Kanta	Assistant, Bengal Chemical and Pharmaceutical Works, Ld	31, Chittaranjan Avenue, South	ditto
	Sen, Shyama Charan	Assistant, Bengal Secretariat, Irrigation Department	Writers' Buildings	ditto
	Sen, Shyam Sundar	Assistant, F W Heilgers & Co	1-1, Clive Street	ditto
	Sen, S K	Assistant, Balmer Lawrie & Co, Ld	103, Clive Street	ditto
	Sen, Subodh Chandra	Assistant, McLeod & Co	28, Dalhousie Square	ditto
	Sen, Subodh Chandra	Physical Instructor, Presidency College	86-1, College Street	ditto
	Sen, Sudhir Chandra	Assistant, Calcutta Improvement Trust	5, Clive Street	ditto
	Sen, Sukumar	Secretary, Great India Insurance, Ld	14, Clive Street	ditto
	Sen, Sunit Ch, BSc	Inspector, Collection Department, Calcutta Corporation	Municipal Office	ditto
	Sen, Surendra Nath	Assistant, Mackinnon, Mackenzie & Co	16, Strand Road	ditto
	Sen, Surendra Nath	Assistant, Accountant-General's Office, Bengal	Treasury Buildings	ditto

Sen, Surendra Nath	Judicial Assistant, Presidency Commissioner's Office	3, Charnock Place	ditto
Sen, Susar Kumar, B COM	Assistant, Accountant-General's Office, Bengal	Treasury Buildings	ditto
Sen, Upendra Chandra	Treasurer, Port Commissioners' Office	Strand Road	ditto
Sen, Upendra Lal	Treasurer, Grindlay & Co, Ld	6, Church Lane	ditto
Sen, Upendra Nath, BA	Assistant, Accountant-General's Office, Bengal	Treasury Buildings	ditto
Sen Gupta, A C	Chief Clerk, Medical Department, E B R	3, Koilaghat Street	ditto
Sen Gupta, Abani Ranjan, BA, BT	Assistant Head Master, Hindu School	College Square	ditto
Sen Gupta, Amiya Kumar	Assistant, Bengal Secretariat, L S-G Deptt	Writers' Buildings	ditto
Sen Gupta, Anil	Prob. Asstt. Secretary, Port Commissioners' Office	Strand Road	ditto
Sen Gupta, Benoyendra Prosad	Accountant, London and Lancashire Insurance Co, Ltd	2, Fairlie Place	ditto
Sen Gupta, Bhabesh Nath	Clerk, D A G P & T Office	7, Koilaghat Street	ditto
Sen Gupta, Bhupesh Chandra, BA	Clerk, Assessor's Department, Calcutta Corporation	Municipal Office	ditto
Sen Gupta, Bijoy Kumar, BA	Assistant, Bengal Secretariat, Finance Department	Writers' Buildings	ditto
Sen Gupta, Binoy Bhusan, BA	Assistant, Accountant-General's Office, Bengal	Treasury Buildings	ditto
Sen Gupta, Binaya Krishna	Head Clerk, Timber Deptt, Jardine Skinner & Co	4, Clive Row	ditto
Sen Gupta, Binode Lal	Traveller, Boots Pure Drug Co, Ld	10, Lal Bazar Street	ditto
Sen Gupta, Birendra Nath, MA	Lecturer, Islamia College	8, Wellesley Street	ditto
Sen Gupta, Bires Chandra, M A, B T	Assistant Master, Hindu School	College Square	ditto
Sen Gupta, Chinta Haran, BL	Assistant, Indian Stores Department (Inspection)	6, Esplanade, East	ditto
Sen Gupta, Debendra Nath, BA	Assessing Inspector, Calcutta Corporation	Municipal Office	ditto

No.	Names.	Style or calling.	Residence or place of business.	Religion.
	Sen Gupta, Debendra Nath	Clerk, Telegraph Check Office	33, Dalhousie Square, South	Hindu
	Sen Gupta, Dhirendra Lal	Assistant, Accountant-General's Office, Bengal	Treasury Buildings	ditto
	Sen Gupta, Dinesh Chandra, BSc	Clerk, Allahabad Bank, Ld	6, Royal Exchange Place	ditto
	Sen Gupta, D R	Estimator, Office of Superintending Engineer, S W Circle	Treasury Buildings	ditto
	Sen Gupta, Gopal Lal, BA	Assistant Master, Armenian College	39, Free School Street	ditto
	Sen Gupta, Girindra Nath	Building Inspector, Calcutta Corporation	Municipal Office	ditto
	Sen Gupta, Haripada	Salesman, Worthington-Simpson, Ld	10, Clive Street	ditto
	Sen Gupta, Hemkanta	Accountant, Standard Sanitary Agency, Ld	64, Bowbazar Street	ditto
	Sen Gupta, Jamini Kanta, MA	Teacher, Bangabasi College School	19, Scott Lane	ditto
	Sen Gupta, Jatindra Kumar, M A	Assistant, Accountant-General's Office, Bengal	Treasury Buildings	ditto
	Sen Gupta, Jatindra Kumar	Clerk, Secretary's Deptt, Port Commissioners' Office	Strand Road	ditto
	Sen Gupta, Jatindra Nath	Head Clerk, Land Acquisition Office	5, Bankshall Street	ditto
	Sen Gupta, Jnan Chandra	Clerk, D A G P & T Office	7, Koilaghat Street	ditto
	Sen Gupta, Jnanendra Prasanna, B A	Assistant, Accountant-General's Office, Bengal	Treasury Buildings	ditto
	Sen Gupta, Kali Charan, BA	Clerk, D A G P & T Office	7, Koilaghat Street	ditto
	Sen Gupta, Kartic Chandra	Assistant, Martin & Co	12, Mission Row	ditto
	Sen Gupta, Khosal Chandra	Assistant, Bengal Secretariat, Record Room	Writers' Buildings	ditto
	Sen Gupta, Kshitish Chandra	Assistant, Bengal Secretariat, Finance Department	Writers' Buildings	ditto
	Sen Gupta, Kunja Lal	Draftsman, Surveyor-General's Office	13, Wood Street	ditto
	Sen Gupta, Makhan Lal, BSc	Assistant, Accountant-General's Office, Bengal	Treasury Buildings	ditto
	Sen Gupta, Matilal	Clerk, Calcutta Improvement Trust	5, Clive Street	ditto
	Sen Gupta, Nalini Kanta	Assistant, James Finlay & Co, Ld	1, Clive Street	ditto

Sen Gupta, Nalini Kanta	Assistant, Andrew Yule & Co, Ld	8, Clive Row	ditto
Sen Gupta, Natabar	Clerk, Telegraph Check Office	33, Dalhousie Square, South	ditto
Sen Gupta, Nishikanta, MA	Assistant, Calcutta University	Senate House	ditto
Sen Gupta, N M	Assistant, Jessop & Co, Ld	93, Clive Street	ditto
Sen Gupta, Nripendra Nath, I	Clerk, D A G P & T Office	7, Koilaghat Street	ditto
Sen Gupta, Nripendra Nath, II	Clerk, D A G P & T Office	7, Koilaghat Street	ditto
Sen Gupta, Parimalhara	Building Inspector, Calcutta Corporation	Municipal Office	ditto
Sen Gupta, Peary Mohan	Professor, Bangabasi College	25-1, Scott Lane	ditto
Sen Gupta, Pramatha Ranjan	Clerk, Telegraph Check Office	33, Dalhousie Square, South	ditto
Sen Gupta, Pratul Chandra, BSc	S A Superintendent, Surveyor of India	13, Wood Street	ditto
Sen Gupta, Prem Ranjan	Assistant, Bird & Co	1-1, Clive Street	ditto
Sen Gupta, Rabindra Kumar	Head Clerk, Begg Dunlop & Co, Ld	2, Hare Street	ditto
Sen Gupta, Rajendra Nath, B L	Office Superintendent, The Bharat Insurance Co, Ld	Chittaranjan Avenue	ditto
Sen Gupta, Sadhan Chandra	Clerk, Imperial Bank of India	3, Strand Road	ditto
Sen Gupta, Saroj Kumar	Salesman, Commercial Credit Corporation, Ld	20, Park Street	ditto
Sen Gupta, Satish Chandra	Head Clerk, (Shipping) Jardine, Skinner & Co	4, Clive Row	ditto
Sen Gupta, Satyaranjan, MSc	Lecturer, Ripon College	24, Harrison Road	ditto
Sen Gupta, S. B	Inspector, License Department, Calcutta Corporation	Municipal Office	ditto
Sen Gupta, Shachindra Nath	Assistant, Accounts Department, Calcutta Corporation	Municipal Office	ditto
Sen Gupta, Shachindra Nath	Building Inspector, Calcutta Corporation	Municipal Office	ditto
Sen Gupta, Shailendra Kumar	Assistant, Income-tax Office	Imperial Secretariat Buildings	ditto

No.	Names.	Style or calling.	Residence or place of business.	Religion.
	Sen Gupta, Shishir Kumar	Stenographer, C E's Office, E I R	E I R House	Hindu
	Sen Gupta, S N	Assistant, Guest, Keen, Williams, Ld	7, Council House Street	ditto
	Sen Gupta, Sudodh Ch	Clerk, C A O's Office, E I R	E I R House	ditto
	Sen Gupta, Subodh Kumar	Assistant, Phoenix Assurance Co, Ld	28, Dalhousie Square	ditto
	Sen Gupta, Surendra Chandra	Assistant, Surgeon-General's Office, Bengal	Writers' Buildings	ditto
	Sen Gupta, Sushil Kumar	Stenographer, Imperial Chemical Industries (India), Ld	18, Strand Road	ditto
	Sen Gupta, Tarak Nath, BSC	Assistant Analyst, Bengal Public Health Laboratory	Chittaranjan Avenue	ditto
	Sen Gupta, Upendra Nath	Clerk, C A O's Office, E I R	E I R House	ditto
	Sen Ray, Tarit Bihari, B COM	Examiner of Accounts, Income-tax Office	3, Government Place, West	ditto
	Seshan, T S	Clerk, I G N & Ry Co, Ltd	4, Fairlie Place	ditto
	Seshiah, Subbavenkatarama	Clerk, Office of H M's Senior Trade Commissioner in India	4, Fairlie Place	ditto
	Set, Dhananjay	Clerk, Telegraph Check Office	33, Dalhousie Square, South	ditto
	Set, Mahesh Das	Clerk, Accounts Deptt, Allahabad Bank, Ld	6, Royal Exchange Place	ditto
	Set, Mukunda Lal	Assistant, Accountant-General's Office. Bengal	Treasury Buildings	ditto
	Sett, Atul Krishna	Divisional Accountant, A-G B's Office	Treasury Buildings	ditto
	Sett, Baidyanath	Clerk, D A G P & T Office	7, Koilaghat Street	ditto
	Sett, Baidya Nath	Assistant, Accountant-General's Office, Bengal	Treasury Buildings	ditto
	Shafi, Mahomed, MA, BT	Assistant Master, Calcutta Madrasah	19, Wellesley Square	Mahomedan
	Shafi, Mahomed	Examiner of Stores, Indian Stores Department (Inspection)	6, Esplanade, East	ditto

Shariff, Shamsuddin, BL	Examiner of Accounts, Income-tax Office	6, Esplanade, East	ditto
Sharma, Baburam	Overseer, Calcutta Improvement Trust	5, Clive Street	Hindu
Sharma, Chiranjilal	Salesman, Greaves Cotton & Co, Ld	60, Dharamtala Street	ditto
Sharma, Kishori Kanta, MA	Lecturer, Vidyasagar College	39, Shankar Ghose Lane	ditto
Sharma, N Ramnath	Bridge Inspector, C E's Office, E I R	E I R House	ditto
Shashital, Hem Chandra Dattatraya	Engineer, English Electric Co, Ltd	D-4, Clive Buildings	ditto
Shiva, Behari Lal	Assistant, Martin & Co	12, Mission Row	ditto
Shome, Bhuban Mohan	Assistant, Bird & Co	1-1, Clive Street	ditto
Shome, Birendra Kumar	Clerk, D A G P & T Office	7, Koilaghat Street	ditto
Shome, Debendra Nath, MA	Accountant, Central Bank of India, Ld	133, Cornwallis Street	ditto
Shome, Joy Gopal	Assistant, Accountant-General's Office, Bengal	Treasury Buildings	Christian
Shome, Lalit Mohan	Clerk, Photo-Litho Branch, Surveyor-General's Office	14, Wood Street	Hindu
Shome, Lalit Mohan, BSC	Cons Overseer, Calcutta Corporation, District II	22, Mirzapore Street	ditto
Shome, Lalit Mohan	Clerk, Office of Superintending Engineer, Presy Circle	Writers' Buildings	ditto
Shome, Nalini Prasanna	Clerk, Jardine, Skinner & Co	4, Clive Row	ditto
Shome, Purna Chandra	Assistant, Accountant-General's Office, Bengal	Treasury Buildings	ditto
Shome, Satcourie	Mg Director, Advance Engineering Works, Ld	Mercantile Buildings	ditto
Shome, S N	Clerk, Calcutta Mint	47, Strand Road	ditto
Siddhanta, Ramkanai, BA	Assistant, Bengal Secretariat, Police Dept	Writers' Buildings	ditto

No.	Names.	Style or calling.	Residence or place of business.	Religion.
	Siddique, Fazlur Rahman, BA, BT	Assistant Master, Calcutta Training School	8, European Asylum Lane	Mahomedan
	Siddique, Md Abdus Samad Quamer, BA.	Urdu Master, La Martiniere	11, Loudon Street	ditto
	Siddique, S M Nizamuddin, BA	Clerk, D A G P & T Office	7, Koilaghat Street	ditto
	Singh, Badan	Clerk, Burmah Shell Co of India, Ld	Hongkong House	Hindu
	Singh, Jainath	Head Clerk, Burra Bazar Branch, Allahabad Bank, Ld	6, Royal Exchange Place	ditto
	Singh, J N	Clerk, C E S C, Ld	Victoria House	ditto
	Singh, Kalika	Clerk, Allahabad Bank. Ld	6, Royal Exchange Place	ditto
	Singh, Pran	Claims Inspector, E B R	3, Koilaghat Street	ditto
	Singh, Sripal	Assistant, Allahabad Bank, Ld	6, Royal Exchange Place	ditto
	Singh, Sudarsan	Clerk, D A G P & T Office	7, Koilaghat Street	ditto
	Singh, Umrao	Assistant, Martin & Co	12, Mission Row	ditto
	Sinha, Ajit Kumar	Assistant, Calcutta University	Senate House	ditto
	Sinha, Amulya Kumar	Assistant, Bengal Secretariat, L S-G Department	Writers' Buildings	ditto
	Sinha, Basanta Narayan	Assistant, National Insurance Co, Ltd	7, Council House Street	ditto
	Sinha, Bhujendra Nath	Clerk, Landale & Clark, Ld	11, Clive Street	ditto
	Sinha, Biman Bhusan	Regtd Accountant, George Read & Co	Avenue House, Chowringhee Square	ditto
	Sinha, Chandi Charan	Examiner of Stores, Indian Stores Department (Inspection)	6, Esplanade, East	ditto
	Sinha, Charu Chandra	Clerk, Burmah Shell Co of India, Ld	Hongkong House	ditto
	Sinha, Dasarathi	Clerk, D A G P & T Office	7, Koilaghat Street	ditto

Sinha, Debipada	Clerk, Ralli Bros, Ld	16, Hare Street	ditto
Sinha, Durga Charan, MA (COM)	Assistant, Accounts Deptt, Dist III, Calcutta Corporation	Hogg Street	ditto
Sinha, Dwijendra Nath, BL	Assistant, Accountant-General's Office, Bengal	Treasury Buildings	ditto
Sinha, Gopeshwar, MSC	Head Bill Clerk, Assessor's Department, Calcutta Corporation	Municipal Office	ditto
Sinha, Gopi Ballav BA	Clerk, D A G P & T Office	7, Koilaghat Street	ditto
Sinha, Haridas	Offg Accountant, Telegraph Check Office	33, Dalhousie Square, South	ditto
Sinha, Jatindra Mohan	Assistant, Burn & Co, Ld	12, Misson Row	ditto
Sinha, Jatindra Nath	Assistant, J Thomas & Co	8, Mission Row	ditto
Sinha, Jatindra Nath	Head Clerk (Share), Jardine, Skinner & Co	4, Clive Row	ditto
Sinha, Jatindra Nath, MSC	Professor, Vidyasagar College	39, Shankar Ghose Lane	ditto
Sinha, Jnanendra Nath	Salesman, Corn Products Co (India), Ld	4, Lyons Range	ditto
Sinha, Kashi Nath	Accounts Clerk, E B R	3, Koilaghat Street	ditto
Sinha, Khagendra Nath	Assistant, Greaves Cotton & Co, Ld	60, Dharamtala Street	ditto
Sinha, Kshetra Nath	Assistant, Accountant-General's Office, Bengal	Treasury Buildings	ditto
Sinha, Lalit Mohan, MA, BT	Assistant Master, Hare School	87, College Street	ditto
Sinha, Mahendra Nath, BA	Assistant, Commercial Intelligence Deptt	1, Council House Street	ditto
Sinha, Manindra Nath	Clerk, D A G P & T Office	7, Koilaghat Street	ditto
Sinha, Manmatha Nath	Assistant, Calcutta University	Senate House	ditto

No.	Names.	Style or calling.	Residence or place of business.	Religion.
	Sinha, Manoj Mohan	Clerk, Traffic Deptt, E B R	3, Koilaghat Street	Hindu
	Sinha, Narendra Nath	Assistant, Excise Commissioner's Office, Bengal	Writers' Buildings	ditto
	Sinha, Netai Krishna	Clerk, D A G P & T Office	7, Koilaghat Street	ditto
	Sinha, Nirmal Kumar, BA	Assistant, Accountant-General's Office, Bengal	Treasury Buildings	ditto
	Sinha, Panchu Gopal	Examiner of Stores, Indian Stores Department (Inspection)	6, Esplanade, East	ditto
	Sinha, Pins Christy	Clerk, C O P S Office, E I R	E I R House	Christian
	Sinha, Sarashi Mohan	Clerk, D A G P & T Office	7, Koilaghat Street	Hindu
	Sinha, Satish Chandra	Clerk, C Elec E's Office, E I R	E I R House	ditto
	Sinha, Satish Chandra	Head Designer, Govt School of Art	28, Chowringhee	ditto
	Sinha, Shachindra Nath	Audit Clerk, Ray & Ray	6, Church Lane	ditto
	Sinha, Shailendra Nath	Assistant, Calcutta University	Senate House	ditto
	Sinha, Shailendra Nath	Clerk, Factory Inspection Department, Bengal	40-1A, Free School Street	ditto
	Sinha, Sharat Chandra	Clerk, Marine Deptt, South British Insurance Co, Ld	5. Clive Street	ditto
	Sinha, Subodh Chandra	Assistant, Bengal Secretariat, Finance Department	Writers' Buildings	ditto
	Sinha, Surendra Prasad	Assistant, Andrew, Yule & Co, Ld	8, Clive Row	ditto
	Sinha, Suresh Chandra, MA	Assistant, Legislative Department, Bengal	Council House	ditto
	Sinha, Sushil Ch	Clerk, Telegraph Check Office	33, Dalhousie Square, South	ditto

Sinha, S S (Dr), M B	Food Inspector, Calcutta Corporation (D IV)	4, Ray Bagan Street	ditto
Sinha, Tarapada, BA	Assistant, Agri and Inds Department, Bengal	Writers' Buildings	ditto
Sinha, Upendra Nath	Head Clerk, North British & Mercantile Insurance Co, Ld	101-1, Clive Street	ditto
Sinha Ray, Nirmal Prasad	Assistant, Income-tax Office	3, Government Place, West	ditto
Sinha Ray, Satish Ch	Clerk, C E S C, Ld	Victoria House	ditto
Siromani, Vethamuthu Gnanayudham	Assistant Secretary, National Council, Y M C A	5. Russell Street	ditto
Solaiman, Mahomed (Maulvi)	Assistant, Bengal Secretariat, Political Deptt	Writers' Buildings	Mahomedan
Srikantaiya, S	Supervisor, Central Bank of India, Ld	71, Cross Street	Hindu
Srimani, Shailendra Nath	Bill Clerk, Geo Henderson & Co, Ld	101-1, Clive Street	ditto
Srinivasam, P N	Assistant, Jessop & Co, Ld	93, Clive Street	ditto
Srinivasan, P	Clerk, D A G P & T Office	7, Koilaghat Street	ditto
Subhan, Golam	Head Clerk, Income-tax Office	1, Hare Street	Mahomedan
Subhan, M A	Assistant, Mackinnon Mackenzie & Co	16, Strand Road	ditto
Subram, Anantaram, B Com	Head Clerk, Jost's Engineering Co, Ld	9B, Mercantile Buildings	Hindu
Subramaney, R	Clerk, Shaw, Wallace & Co	4, Bankshall Street	ditto
Subramaniam, Keshavaiyer	Stenographer, South British Insurance Co, Ld	5, Clive Street	ditto
Subramanian, H V	Assistant, Brooke Bond India, Ld	2, Mercaire Street	ditto

No.	Names.	Style or calling.	Residence or place of business.	Religion.
	Subramanian, P S	Audit Inspector, Port Commissioners' Office	Strand Road	Hindu
	Subramanian, Ramadurai, MA	Junior Auditor, E B R	3, Koilaghat Street	ditto
	Suchak, V M	Canvasser, Imperial Chemical Industries (India), Ld	18, Strand Road	ditto
	Sud, Lakshmi Narayan	Clerk, Allahabad Bank, Ld	6, Royal Exchange Place	ditto
	Sukla, Bhupatlal Amritlal	Assistant, Jeewanlal (1929), Ltd	101, Clive Street	ditto
	Sukla, Loknath	Assistant, Allahabad Bank, Ld	6, Royal Exchange Place	ditto
	Sukla, Satya Narayan	Clerk, Allahabad Bank, Ld	6, Royal Exchange Place	ditto
	Shukla, Shyama Charan	Clerk, Accounts Department, Allahabad Bank, Ld	6, Royal Exchange Place	ditto
	Sukla, Shyam Narayan	Chief Clerk, (D A) O's Office, E I R	E I R House	ditto
	Sur, A L	Assistant Accounts Officer, E I R	E I R House	ditto
	Sur, Bijaya Krishna	Clerk, Imperial Bank of India	3, Strand Road	ditto
	Sur, Bipin Bihari, BA	Assistant, Education Department, Bengal Secretariat	Writers' Buildings	ditto
	Sur, Gour Chandra	Clerk, Calcutta Improvement Trust	5, Clive Street	ditto
	Sur, Jahar Lal	Assistant Accountant, Imperial Bank of India, Clive Street Branch	8, Clive Street	ditto
	Sur, Jyotiprasad	Clerk, C A O's Office, E I R	E I R House	ditto
	Sur, Manicklal	Clerk, Imperial Bank of India	3, Strand Road	ditto
	Sur, Nandalal	Clerk, C O P S Office, E I R	E I R House	ditto

Sur, Panchu Gopal	Clerk, Imperial Bank of India	3, Strand Road		ditto
Sur, Rajani Kanta	Assistant, Central Forms Store	166, Dharamtala Street		ditto
Sur, Sachidananda	Clerk, Central Registry, E I R	E I R House		ditto
Sur, Satish Chandra	Clerk, Central Registry, E I R	E I R House		ditto
Sur, Satya Prasanna	Assistant, Bird & Co	1-1, Clive Street		ditto
Sur, S M	Assistant, Oriental Government Security Life Assurance Co, Ld	2, Clive Row		ditto
Sutradhar, Pranballabh, BA	Accountant, Office of the Dy Director of Agriculture, Western Circle.	Writers' Buildings		ditto
Swami Ramchandra Yagna	Assistant, Nestle & Anglo-Swiss Condensed Milk (Export) Co, Ld	9A, Clive Street		ditto
Swami, V M	Assistant Accountant, Remington Rand Inc	3, Council House Street		ditto
Swaminathan, G K	Assistant, Thos Cook & Son, Ld	4, Dalhousie Square		ditto
Swaminathan, Kandadi Subramania	Assistant, Govan Bros, Ld	20, Park Street		ditto
Swaminathan, T S	Asstt, National Insurance Co, Ld	7, Council House Street		ditto
Swaminathan Viswanathan	Clerk, Grindlay & Co Ld	6, Church Lane		ditto
Syed Karimuzzaman, B COM	Clerk, License Department, Calcutta Corporation	Municipal Office		Mahomedan

T

Talapatra, Atul Chandra	Assistant Accountant, P H D, Bengal	3, Charnock Place		Hindu
Talati, Bejon B, BCOM	Internal Auditor, Central Bank of India, Ld	100, Clive Street		Zoroastrian
Talati, Dassabhai Edulji	Assistant, Ralli Bros, Ld	16, Hare Street		ditto
Talati, E P	Accountant, Adamjee Hajee Dawood & Co, Ld	5, Dalhousie Square, East		ditto
Talukdar, A H	Assistant, Meyer & Co	6-3, Lindsay Street		Hindu

No.	Names.	Style or calling	Residence or place of business.	Religion.
	Talukdar, Ishaq Ali, BA	Examiner of Accounts, Income-tax Office	1, Hare Street	Mahomedan
	Talukdar, Jogendra Lal	Assistant, Commercial Intelligence Deptt, India	1, Council House Street	Hindu
	Talukdar, Pramatha Nath, BL	Assistant, Accountant-General's Office, Bengal	Treasury Buildings	ditto
	Tandon, B N	Chief Clerk, Dy Agent's Office, E I R	E I R House	ditto
	Tandon, Shyam Sundar	Clerk, Allahabad Bank, Ld	6, Royal Exchange Place	ditto
	Tara, M R	Assistant, Grahams Trading Co (India), Ld	6, Lyons Range	Zoroastrian
	Tarafdar, Shyamapada, BSC	Assistant, Bengal Secretariat, Judicial Department	Writers' Buildings	Hindu
	Tayab, Abu, MA	Inspector Surveyor, Income-tax Office	3, Government Place, West	Mahomedan
	Tayal, Sital Prasad, MA	Asstt. in charge, Coal Deptt, K C Thapar & Bros, Ld	5, Royal Exchange Place	Hindu
	Tewari, Shyam Sunder	Clerk, Allahabad Bank, Ltd	6, Royal Exchange Place	ditto
	Thapar, Ved Prakash, BA	Asstt in charge, Stores and Supply Deptt, K C Thapar & Bros, Ld	5, Royal Exchange Place	ditto
	Thiagerajan, Sankernarayan	Clerk, Burmah Shell Co of India, Ld	Hongkong House	ditto
	Tosh, Kalipada	Clerk, Marine Department, South British Insurance Co, Ld	5, Clive Street	ditto
	Trikha, S N	Assistant, Jessop & Co, Ld	93, Clive Street	ditto
	Tripati, Beni Shankar	Clerk, C A O's Office, E I R	E I R House	ditto
	Trivedi, Krishnapada	Assistant, Accounts Department, Calcutta Corporation	Municipal Office	ditto

U

Uddin, Yar, M A	Examiner of Accounts, Income-tax Office	1, Hare Street	Mahomedan
Udeshi, Dwarkadas Vithaldas	Salesman, Greaves Cotton & Co, Ld	60, Dharamtala Street	Hindu

V

Valluri, S R	Examiner of Stores, Indian Stores Deptt	6, Esplanade East	Hindu
Vanchinathan, R	Assistant Electrical Engineer, E I R	E I R House	ditto
Varadhachari, S	Stenographer, Macmillan & Co, Ld	294, Bowbazar Street	ditto
Varma, Puttan Lal	Clerk, C A O's Office, E I R	E I R House	ditto
Venkataram, M S B A	Museum Assistant, Geological Survey of India	27, Chowringhee	ditto
Venkatesan, M Swarma, BA	Accountant, All Indian Radio	1, Garstin Place	ditto
Venkateswar, Ayakad Krishna	Stenographer, Tata Iron and Steel Co, Ld	100, Clive Street	ditto
Venugopalam, K	Assistant, Sun Life of Canada	12, Dalhousie Square, East	ditto
Vidyaratna, Bhababhuti	Assistant Master, Sanskrit Collegiate School	College Square	ditto
Vishwanatham, K S	Assistant, Lionel Edwards, Ld	D-1, Clive Buildings	ditto

No.	Names.	Style of calling.	Residence or place or business.	Religion.
	V			
	Vora, P T	Assistant Accountant, Central Bank of India, Ld	71, Cross Street	Jain
	Vyas, V N	Accountant, Adamjee Hajee Dawood & Co, Ld	5, Dalhousie Square, East	Hindu
	W			
	Wadud, Abdul (Maulvi) M A	District Inspector of Schools, Calcutta	40-1A, Free School Street	Mahomedan
	Wahab, Abul Mukarem Fazlul	Librarian, Calcutta Madrassah	19, Wellesley Square	ditto
	Y			
	Yunnus, Mahomed	Assistant, Income-tax Office	1, Hare Street	Mahomedan
	Yusuff, Abul Faiz Mahmud, BA	Assistant, Bengal Secretariat, Finance Deptt	Writers' Buildings	ditto
	Yusuff, Md	Clerk, D A G P & T Office	7, Koilaghat Street	ditto
	Z			
	Zahiruddin	Sub-Head, C A O's Office, E I R	E I R House	Mahomedan
	Zain-ul-Abedin	Assistant, Office of the Director of Industries, Bengal	40-1A, Free School Street	ditto
	Zaman, Syed-uz	Chief Assistant, C O S Office, E I R	E I R House	ditto

O. MOSES,
Clerk of the Crown.

Special Jury List

List of persons liable to serve on Special Juries in the High Court of Judicature at Fort William in Bengal for the year ensuing from 1st May 1937 pursuant to Act V of 1898.

Remarks.—Errors in names and descriptions can be corrected on communication to the office of the Clerk of the Crown Revised list will be published on the 29th day of April 1937 Any person who deems himself for any reason wrongly included in the list should address the Clerk of the Crown on the subject immediately as the revised list will be final

No.	Names.	Style or calling	Residence or place of business.	Religion.
	A			
	Abraham, P G	Member, National Council, Y M C A	5, Russell Street	Christian
	Acheson, Frederick William	Technical Assistant, C E S C, Ld	Victoria House	ditto
	Acton, E	Director, Acton, Ld	D-5, Clive Buildings	ditto
	Acton, K M	Director, Acton, Ld	D-5, Clive Buildings	ditto
	Adam, Harry (M.G.)	Managing Director, Paterson Engineering Co (India), Ld	2, Dalhuosie Square	ditto
	Adcock, W H	Assistant Sales Manager, G E C (India), Ld	Magnet House, Central Avenue South	ditto
	Affleck, A K	Director, H Hobbs & Co, Ld	9, Old Court House Street	ditto
	Ahern, P J	Engineer, Martin & Co	12, Mission Row	ditto
	Aiman, J S	General Secretary, National Council, Y M C A	5, Russell Street	ditto
	Ainscough, J P	Assistant, Shaw, Wallace & Co	4, Bankshall Street	ditto
	Ainslie, Kenneth	Assistant, F W Heilgers & Co	1-1, Clive Street	ditto
	Aitken, James	Manager, James, Finlay & Co, Ld	1, Clive Street	ditto
	Alcock, R	Assistant, W J Alcock & Co	7, Hastings Street	ditto

No.	Names.	Style or calling.	Residence or place of business.	Religion.
	Alcock, Robert J	Assistant, Balmer, Lawrie & Co, Ld	103, Clive Street	Christian
	Alcock, W J	Consulting and Chemical Engineer	7, Hastings Street	ditto
	Alexander, V G	Secretary, Motor Union Insurance Co, Ld	1 & 2, Old Court House Corner	ditto
	Alexandroff, Alexander John	Assistant, Ralli Bros, Ld	16, Hare Street	ditto
	Alford, R S M	Assistant, Lipton, Ld	9, Weston Street	ditto
	Allan, T T K	Manager, National Bank of India, Ld	104, Clive Street	ditto
	Allen, C H	Secretary, Sun Life of Canada	12, Dalhousie Square, East	ditto
	Allen, Geoffrey Lea	Director, Shimwell Bros (Cal.), Ld	1-1, Clive Street	ditto
	Allen, W	Assistant, Mackinnon, Mackenzie & Co	16, Strand Road	ditto
	Allison, John Laurence	Assistant, London & Lancashire Insurance Co, Ld	2, Fairlie Place	ditto
	Alliston, L H	Director, L H Alliston & Co, Ld	B-5, Clive Buildings	ditto
	Alliston, M E	Director, L H Alliston & Co, Ld	B-5, Clive Buildings	ditto
	Alloway, Herbert Essex	Manager, Supply Department, Imperial Tobacco Co of India, Ld	37, Chowringhee	ditto
	Amsden, B F	Director, Ingersoll Rand (India), Ld	15, Clive Street	ditto
	Anastasiadi, John Pelopidas	Assistant, Ralli Brothers, Ld	16, Hare Street	ditto
	Anderson, Allan	Assistant, Hoare, Miller & Co, Ld	5, Fairlie Place	ditto
	Anderson, D Y	Traffic Manager & Secretary, Baraset-Basirhat Light Ry. (Martin & Co.)	12, Mission Row	ditto
	Anderson, J W J	Assistant, Burn & Co, Ld	12, Mission Row	ditto
	Anderson, Mills Finlay	Accountant, Martin & Co	12, Mission Row	ditto

Anderson, W	Governing Director, Hall & Anderson, Ld	31, Chowringhee	ditto
Andrews, P. T.	Assistant (2nd Grade), Imperial Bank of India	Strand Road	ditto
Anstey, B A	Manager for India, Scottish Union & National Insurance Co.	6, Lyons Range	ditto
Anthony, L	Resident	16, Theatre Road	ditto
Antrobus, Hinson Allan	Director, Begg, Dunlop & Co, Ld	2, Hare Street	ditto
Apcar, J M	Merchant	18, Park Lane	ditto
Apostoldides, Michael Demosthenes	Assistant, Ralli Bros, Ld	16, Hare Street	ditto
Arakie, A	Merchant	6, Pretoria Street	Jew
Arakie, H	Merchant	1, Rawdon Street	ditto
Arakie, Mordi	Merchant	6, Pretoria Street	ditto
Archer, C W	Assistant, Jardine, Skinner & Co	4, Clive Row	ditto
Armour, R	Managing Director, R K O Radio Pictures, Ld	Tower House	Christian
Armstrong, W L	Director, Villiers, Ld	F-3, Clive Buildings	ditto
Arnold, Kenneth Noss	Engineer, Martin & Co	12, Mission Row	ditto
Arnott, John Dickson	Assistant, Allahabad Bank, Ld	6, Royal Exchange Place	ditto
Arratoon, G A	Partner, Arratoon & Co, Ld	5, Dalhousie Square, East	ditto
Arthern, M	Managing Director, Winter Bros	Mercantile Buildings	ditto
Arthur, Lucas William Fleming	Agent, Imperial Bank of India	Russell Street	ditto
Arthur, R S	Assistant, Lovelock & Lewes	4, Lyons Range	ditto
Ashmore, Fred	Assistant Engineer, Inspection, Indian Stores Department	6, Esplanade East	ditto

No.	Names.	Style or calling	Residence or place of business.	Religion.
	Ashton, H	Manager, Chhajuram & Sons	100, Clive Street	Christian
	Atkinson, Lawrence Patrick ..	Actg Editor, Star of India	3, Wellesley Place	ditto
	Austin, George John	Director, J B Norton & Sons, Ld	Norton Buildings	ditto
	B			
	Baggs, James Patrick	Assistant, Gillanders, Arbuthnot & Co	8, Clive Street	Christian.
	Bagley, F R	Secretary, Brooke Bond, India, Ld	2, Metcalfe Street	ditto
	Bagnall, John F	Assistant, Macneill & Co	2, Fairlie Place	ditto
	Baikie, H M	P A to Chief Engineer, E B R	3, Koilaghat Street	ditto
	Bailey, John Arthur, AIAA ..	Assistant, Martin & Co	12, Mission Row	ditto
	Bailey, W E	Sr Assistant, Shaw, Wallace & Co	4, Bankshall Street	ditto
	Baird, W D	Assistant, Reed Ward & Co	6, Lyons Range	ditto
	Baker, Reginald George ..	Director, Imperial Tobacco Co of India, Ld	37, Chowringhee	ditto
	Baker, R J	Manager, Sun Life of Canada	12, Dalhousie Square, East ..	ditto
	Ballance, Charles	General Manager, Paramount Films, Ld Inc.	170, Dharamtala Street	ditto
	Ballantyne, Herbert Samuel Binning	Mains Engineer, C E S C, Ld	Victoria House	ditto
	Bance, Arthur Frederick ..	Company Secretary, W. Billinton & Co, Ld	Stephen House	ditto
	Bannerman, Henry Campbell ..	Assistant, Macneill & Co	2, Fairlie Place	ditto
	Bannett, N C W	Asstt. Commercial Manager, E I R	E I R House	ditto
	Barber, Herbert Eustace ..	Partner, Talbot & Co	Tower House, Chowringhee Square ..	ditto

Barling, Francis Gilbert Bonner	Assistant Manager, Mulcolt Belting Co, Ld	10, Government Place, East	ditto
Barnes, O J	Agent, Hongkong & Shanghai Banking Corporation	Hongkong House	ditto
Baron, C G	Dist Traffic Supdt, E B R	3, Koilaghat Street	ditto
Barrett, Harold	Manager, Houghton, Butcher (Eastern), Ld	10, Hungerford Street	ditto
Barron, H	Dist. Engineer, E I R	E I R House	ditto
Barron, S	Assistant, Arlington & Co	13-3, Old Court House Street	ditto
Bartholomew, G	Chartered and Consulting Engineer	7, Old Court House Street	ditto
Bartlett, J R H	Managing Director, R V Briggs & Co, Ld	8-B, Lall Bazar Street	ditto
Bartley, M E	Assistant Traffic Superintendent, E B R	3, Koilaghat Street	ditto
Bartley, W. Coppen	Secretary, Aluminium Manufacturing Co, Ld	9, Clive Street	ditto
Bash, L G	Director, Jeewanlal (1929), Ld	101, Clive Street	ditto
Basil, D A	Proprietor, Electric Stores and Engineering Co	13A, Russell Street	ditto
Basil, S A	Partner, Talbot & Co	Tower House, Chowringhee Square	ditto
Batchelor, G F F	Partner, James Luke & Sons	7, Royal Exchange Place	ditto
Bateman, Hugh Fiez Herbert	Partner, Shaw, Wallace & Co	4, Bankshall Street	ditto
Bates, Percy	Assistant, Kilburn & Co	4, Fairlie Place	ditto
Bateson, Isaac	Assistant Manager, Indian School Supply Depot	Chittaranjan Avenue, South	ditto
Bateson, James Dingwall Mayhew	Assistant, Gillanders, Arbuthnot & Co	8, Clive Street	ditto
Battey, Wilfred Bruce Kenyon	Assistant, Battey and Kemp	9, Ezra Mansions	ditto
Battey, Wilfred Kenyon	Proprietor, Battey & Kemp	9, Ezra Mansions	ditto

No.	Names.	Style or calling.	Residence or place of business.	Religion.
	Battle, Frank	Bank Manager, Thos Cook & Son, Ld.	4, Dalhousie Square	Christian
	Batty, Walter Henry	Partner, W S Cresswell & Co	3, Clive Row	ditto
	Baxter, C W	Director, Halley Brothers, Ld	135, Canning Street	ditto
	Baxter, T N	Insurance Assistant, New Zealand Insurance Co, Ld	26, Dalhousie Square	ditto
	Baylis, R W	Managing Director, C & E Morton (India), Ld	11, Clive Street	ditto
	Beatt, D H	Assistant, Mackinnon, Mackenzie & Co	16, Strand Road	ditto
	Behrend, S W E	Assistant, Imperial Chemical Industries (India), Ld	18, Strand Road	ditto
	Bell, C C C	Assistant, James, Finlay & Co, Ld	1, Clive Street	ditto
	Bell, Ralph Lane	Director, Imperial Tobacco Co of India, Ld	37, Chowringhee	ditto
	Benjamin, J A	Partner, Innes, Watson & Co	15, Clive Row	Jew
	Bennett, H K	Head Engineer, Calcutta Mint	47, Strand Road	Christian
	Benson, George	Manager, David, Sassoon & Co, Ld	4, Lyons Range	ditto
	Bent, William	Managing Director, Callender's Cable & Construction Co, Ld	54, Ezra Street	ditto
	Benthall, A P	Assistant, Bird & Co	1-1, Clive Street	ditto
	Benthall, E C (Sir)	Partner, Bird & Co	1-1, Clive Street	ditto
	Bentley, Harold	General Manager, Keymer, Bagshawe & Co, Ld	4, Lyons Range	ditto
	Benwell, William Sydney	Accountant, Duncan Brothers & Co, Ld	101, Clive Street	ditto
	Berry, W E	Assistant Secretary, Scottish Union & National Insurance Co	6, Lyons Range	ditto
	Berthoud, Ernest Alfred	Partner, Berthoud & Co	6, Royal Exchange Place	ditto

Berthoud, George Felix	Partner, Berthoud & Co	6, Royal Exchange Place	ditto
Bett, A M	Assistant, Jute Industries, Ld	1A, Hare Street	ditto
Biggar, Allan	Assistant, F W Heilgers & Co	1-1, Clive Street	ditto
Biggs, W J	Chief Accountant, G E C (India), Ld	Magnet House, Chittaranjan Avenue South.	ditto
Bilton, Norman Cooper	Chief Engineer, Bengal Telephone Corporation, Ld	8, Hare Street	ditto
Binning, Harold Angus	Partner, Thos Seth Apcar & Co	F-1, Clive Buildings	ditto
Bird, Charles William	Engineer, Alfred, Herbert (India), Ld	13-3, Strand Road	ditto
Bird, J A G	Assistant, Shaw, Wallace & Co	4, Bankshall Street	ditto
Bird, N C	Freight Superintendent, India Genl. Navgn. & Ry Co, Ld	4, Fairlie Place	ditto
Birkmyre, Henry (Sir)	Partner, Birkmyre Bros	8, Clive Row	ditto
Birtwistle, R E	Assistant, Landale & Morgan	3, Fairlie Place	ditto
Bishop, A H	Director, Guest, Keen, Williams, Ld	7, Council House Street	ditto
Bishop, H C W	Director, Balmer, Lawrie & Co, Ld	103, Clive Street	ditto
Bishop, Henry Maitland	Assistant Manager, Eastern Federal Union Insurance Co, Ld	9, Clive Street	ditto
Black, Duncan Morrison	Engineer, Burmah Shell Co of India, Ld	Hongkong House	ditto
Black, J O L	Sub-Accountant, The Eastern Bank, Ld	9, Clive Street	ditto
Black, R J	Manager, Maitland, Craig, Ld	E-2, Clive Buildings	ditto
Black, W A	Partner, Reed, Ward & Co	6, Lyons Range	ditto
Blair, Alistair Patrick, BA (Cantab)	Sales Manager, Burmah Shell Co of India, Ld	Hongkong House	ditto
Blair, John	Assistant, James, Finlay & Co, Ld	1, Clive Street	ditto

No.	Names.	Style or calling.	Residence or place of business.	Religion.
	Bland, Charles Roxberry	Manager for India, W T Henley's Telegraph Works Co, Ld	Old Court House Corner	Christian
	Bland, R A H	Sub-Accountant, Mercantile Bank of India, Ld	8, Clive Street	ditto
	Blease, A C T	Traffic Manager, Calcutta Tramways Co Ld	7, Church Lane	ditto
	Blewitt, H	Assistant, Gladstone, Wyllie & Co	4, Fairlie Place	ditto
	Blomenstock, Leonard Mark	Partner, Piggott, Chapman & Co	6, Lyons Range	ditto
	Boldy, J D	Proprietor, J D Boldy & Co	16, Galstaun Mansions	ditto
	Bolland, Partrick Henry	Manager, Greaves, Cotton & Co, Ld	60, Dharamtala Street	ditto
	Bollins, Cyril James	Assistant, Martin & Co	12, Mission Row	ditto
	Bolst, Wilton James	Bullion Registrar, Calcutta Mint	47, Strand Road	ditto
	Bolton, C J H	Managing Director, J Stone & Co, Ld	30, Galstaun Mansions	ditto
	Bond, C L	Assistant, Standard-Vacuum Oil Co	6, Church Lane	ditto
	Bond-Nelson, F O	Secretary and Director, Ingersoll-Rand (India), Ld	15, Clive Street	ditto
	Booker, Alfred	Manager, William, Jacks & Co	10, Clive Street	ditto
	Boothroyd, S L	Managing Director, Calcutta Chromotype Co	52-3, Bowbazar Street	ditto
	Borroughs, T	Manager (Produce), Grahams Trading Co (India), Ld	6, Lyons Range	ditto
	Borrowman, William James	Assistant, Gillanders, Arbuthnot & Co	8, Clive Street	ditto
	Bowker, Henry Charles	Mains Engineer, C E S C, Ld	Victoria House	ditto
	Bowman, J	Office Manager, D Gestetner (India), Ld	32, Grosvenor House	ditto
	Bowman, Thomas Sellar	Journalist, *Statesman*, Ld	Statesman House	ditto

Boyce, C O	Superintendent, C E's Office, Port Commissioners	Strand Road		ditto
Bradly, M S	Assistant, Shaw, Wallace & Co	4, Bankshall Street		ditto
Bradshaw, Francis Henry	Director, Hoare, Miller & Co, Ld	5, Fairlie Place		ditto
Brady, P J Brenden	Manager, Philips Electrical Co (India), Ld	Tower House		ditto
Bragg, B A	Manager, Queensland Insurance Co, Ld	6, Royal Exchange Place		ditto
Braham, A E	Manager, A Bradley & Co	8, Old Court House Corner		Jew
Brain, N T	Director, Brooke Bond, Ld	2, Metcalfe Street		Christian
Bredee, G Leslie	Assistant, Andrew, Yule & Co, Ld	8, Clive Row		ditto
Brentford, C G	Assistant, Imperial Chemical Industries (India), Ld	18, Strand Road		ditto
Bright, J H	Partner, Bright & McIvor	16, Chowringhee		ditto
Brims, Alistair	Director, British India Publishing Co	Stephen House		ditto
Bristow, William George Bissett	Director, Imperial Tobacco Co of India, Ld	37, Chowringhee		ditto
Brittain, S S W	Manager, Grindlay & Co, Ld	6, Church Lane		ditto
Brodie, N	Assistant, Gladstone, Wyllie & Co	4, Fairlie Place		ditto
Brodie, William C G	Director, Lionel, Edwards, Ld	D-1, Clive Buildings		ditto
Brodie, William James Wilson	Partner, Ziffo & Co	5, Garstin Place		ditto
Broers, Alec William	Manager for India, Caledonian Insurance Co	8, Clive Street		ditto
Brown, A E	Director, Hall & Anderson, Ld	31, Chowringhee		ditto
Brown, Alex Jas	Director, Great Eastern Hotel, Ld	1, 2 & 3, Old Court House Street		ditto
Brown, A O	Partner, Mackinnon, Mackenzie & Co	16, Strand Road		ditto

No.	Names.	Style or calling.	Residence or place of business.	Religion.
	Brown, C (Capt.)	Marine Superintendent, Mackinnon, Mackenzie & Co	16, Strand Road	Christian.
	Brown, Eddis Gordon	Editor, Commercial Department, Reuters, Ld	7, Hare Street	ditto
	Brown, Gordon Forbes	Assistant, Bird & Co	1-1, Clive Street	ditto
	Brown, G R R	Assistant, Imperial Chemical Industries (India), Ld	18, Strand Road	ditto
	Brown, James Alexander	Manager, C C Wakefield & Co, Ld	7, Royal Exchange Place	ditto
	Brown, John	Engineer, Mackintosh, Burn, Ld	8, Clive Street	ditto
	Brown, K N	Agency Manager, Manufacturers Life Insurance Co	27, Dalhousie Square	ditto
	Brown, William Lothian	General Manager, Allahabad Bank, Ld	6, Royal Exchange Place	ditto
	Bruce, E	Assistant, Balmer, Lawrie & Co, Ld	103, Clive Street	ditto
	Buchan, David Gibb	Assistant, Andrew, Yule & Co, Ld	8, Clive Row	ditto
	Buchanan, J	Senior Proprietor, Buchanan Sons & Co	21, Old Court House Street	ditto
	Buchanan, James, MA	Physical Director to the Government of Bengal	Writers' Buildings	ditto
	Buckler, R L B	District Manager, Lloyds Bank, Ld	101-1, Clive Street	ditto
	Bucknall, M G	Assistant, Shaw, Wallace & Co	4, Bankshall Street	ditto
	Buist, I D C	Assistant, A M Mair & Co	6, Royal Exchange Place	ditto
	Bulger, Daniel D	Handicapper, Royal Calcutta Turf Club	11, Russell Street	ditto
	Bulkeley, William L	Accountant, National City Bank of New York	4, Clive Street	ditto
	Bullock, Herbert Stanley	Assistant Manager, Phoenix Assurance Co, Ld	28, Dalhousie Square	ditto
	Bullock, J	General Manager, John, Dewar & Sons, Ld	12, Hare Street	ditto

Burder, J H	Partner, Jardine, Skinner & Co	4, Clive Row	ditto
Burkinshaw, H R	Assistant, Jessop & Co, Ld	93, Clive Street	ditto
Burn, H H	Partner, McLeod & Co	28, Dalhousie Square	ditto
Burns, A D	Assistant, William, Jacks & Co	10, Clive Street	ditto
Burns, J M	Partner, W J Walker & Co	6, Commercial Buildings	ditto
Butler, B	Assistant, Shaw, Wallace & Co	4, Bankshall Street	ditto
Buttar, I D W	Assistant, Price, Waterhouse, Peat & Co	B-4, Clive Buildings	ditto
Butterwick, P E	Assistant Stores Officer, E B R	3, Koilaghat Street	ditto

C

Caine, George William Robert	Chartered Accountant, Begg, Dunlop & Co, Ld	2, Hare Street	Christian
Cameron, Alec Leslie	Director, Andrew, Yule & Co, Ld	8, Clive Row	ditto
Cameron, N	Director, Hoyle, Robson, Barnett & Co (India), Ld	Tower House	ditto
Campbell, Duncan Bruce	Accountant, Cutler, Palmer & Co	10, Government Place, East	ditto
Campbell, George Riddoch	Partner, Mackinnon, Mackenzie & Co	16, Strand Road	ditto
Campbell, I P F	Director, Balmer, Lawrie & Co, Ld	103, Clive Street	ditto
Campbell, R H D	Assistant, Shaw, Wallace & Co	4, Bankshall Street	ditto
Campbell-Jones, H	Managing Director, Bombay Co, Ld	19, British Indian Street	ditto
Canning, Walter Howard	Mains Engineer, C E S C, Ld	Victoria House	ditto
Cantelo, Alfred	Assistant, Bird & Co	1-1, Clive Street	ditto
Cardew, Frank Mackay, BA	Accountant, Martin & Co	12, Mission Row	ditto

No.	Names.	Style or calling.	Residence or place of business.	Religion.
	Carmichael, Charles Alexander	Assistant, Andrew, Yule & Co, Ld	8, Clive Row	Christian
	Carmody, D R	Assistant Secretary to Agent, Agent's office, E I R	E I R House	ditto
	Carpenter, Francis William Allan	Manager, Burn & Co, Ld	12, Mission Row	ditto
	Carpenter, Francis William Allan	Assistant, Bird & Co	1-1, Clive Street	ditto
	Carson, A P	Assistant, Babcock & Wilcox, Ld	4, Bankshall Street	ditto
	Carson, Murray Alexander	Manager, Ralli Bros, Ld	16, Hare Street	ditto
	Carter, C G	Manager, Stephens & Co, Ld	33, Bow Bazar Street	ditto
	Carter, E J	Partner, Lovelock & Lewes	4, Lyons Range	ditto
	Carter, E. P.	Manager, British Refrigerators	30-A, Chowringhee	ditto
	Carter, R S	Acting Manager, Thacker, Spink & Co (1933), Ld	3, Esplanade, East	ditto
	Carty, D B A	Director, Indian Oxygen & Acetylene Co, Ld	12, Mission Row	ditto
	Cashmore, A	Assistant, Turner, Morrison & Co, Ld	6, Lyons Range	ditto
	Catchpole, William Robinson	Director, W. Newman & Co, Ld	3, Old Court House Street	ditto
	Caven, John William	Chief Accountant, C E S C, Ld	Victoria House	ditto
	Chadwick, F D	Manager, Mather & Platt, Ld	7, Hare Street	ditto
	Chalmers, Wm	Partner, Perman & Hynd	9, Clive Street	ditto
	Chandler, James Harmer	Engineer, English Electric Co, Ld	D-4, Clive Buildings	ditto
	Chir, Lawrence Anthony	Engineer, Callender's Cable & Construction Co, Ld	2, Pollock Street	ditto
	Christie, A W	Assistant, J Thomas & Co	8, Mission Row	ditto

Christie, Thomas Murray Delamare ..	Inspector of Tea Gardens, Begg, Dunlop & Co, Ld	2, Hare Street	ditto
Church, John William Gadsden ..	Mains Engineer, C E S C, Ld	Victoria House	ditto
Church, V W B	Agent, Bank of India, Ld	9-A, Clive Street	ditto
Churnside, Joseph William ..	Assistant, Accounting Department, Imperial Tobacco Company of India, Ld	37, Chowringhee	ditto
Clark, B W	Manager, Allen & Hanburys, Ld	Clive Buildings	ditto
Clark, Ian Archibald	Partner, Anderson, Wright & Co	22, Strand Road	ditto
Clark, Leonard Alfred	Director, R Sim & Co, Ld	2, Clive Row	ditto
Clarke, C E	Manager, Whiteaway, Laidlaw & Co, Ld	7, Chowringhee	ditto
Clarke, R W	Assistant, Jessop & Co, Ld	93, Clive Street	ditto
Cleghorn, Colin	Assistant, Anderson, Wright & Co	22, Strand Road	ditto
Clement, W L	Manager, Grahams Trading Co, Ld	6, Lyons Range	ditto
Clough, R J	Assistant, James, Finlay & Co, Ld	1, Clive Street	ditto
Clowes, S T	General Manager, W & T Avery, Ld	28, Waterloo Street	ditto
Clutsom, C R	Manager, Leyland Motors, Ld	76, Lower Circular Road ..	ditto
Cochran, William Banks ..	Assistant, Blackwood, Blackwood & Co	2, Mangoe Lane	ditto
Cockle, Harold Francis James Maurice	Assistant, Andrew, Yule & Co, Ld	8, Clive Row	ditto
Cocks, Harold Allan	Assistant, Asbestos Cement, Ld	135, Canning Street	ditto
Cohen, Abraham Fredrick ..	Manager, E Meyer & Co (1926), Ld	2, Clive Ghat Street	Jew
Cohen, D J	Landholder	11, Camac Street	ditto
Cohen, E A	Landholder	16, Loudon Street	ditto

No.	Name.	Style or calling.	Residence or place of business.	Religion.
	Cohen, I H	Landholder	99, Prinsep Street	Jew
	Cohen, Immanuel Jacob	Landholder	99, Prinsep Street	ditto
	Cole, Dudley Maurice	Assistant, Caledonian Printing Co, Ld	3, Wellesley Place	Christian
	Cole, Robert Walter	Assistant, North British & Mercantile Insurance Co, Ld	101-1, Clive Street	ditto
	Collershaw, Herbert	Engineer, Bengal Telephone Corporation, Ld	8, Hare Street	ditto
	Colley, Abel Rex	Assistant Commercial Manager, C E S C, Ld	Victoria House	ditto
	Collingwood, Frank	House & Estate Agent	13-1 & 13-2, Government Place, East	ditto
	Collis, R N	Chief Accountant, Lipton, Ld	9, Weston Street	ditto
	Colquhoun, Samuel	Manager, Litho, Surveyor-General's Office	14, Wood Street	ditto
	Coltart, Hugh Frederick	Partner, Mackenzie Lyall & Co	5, Mission Row	ditto
	Colven, G F F	Assistant Accountant, The P & O Banking Corporation, Ld	1, Fairlie Place	ditto
	Colville-Smith, Deryck	Assistant, W S Cresswell & Co	3, Clive Row	ditto
	Comerton, James	Accountant, Martin & Co	12, Mission Row	ditto
	Conquo, John Bernard	Assistant, Imperial Bank of India	Strand Road	ditto
	Cook, Henry Millon	Director, East India Insurance Co, Ld	10, Clive Street	ditto
	Cooper, A T	Director, Macfarlane & Co, Ld	4, Auckland Square	ditto
	Cooper, Charles G	Partner, Barry & Co	2, Fairlie Place	ditto
	Cooper, H G	Branch Manager, Burmah-Shell Co of India, Ld	Hongkong House	ditto
	Cooper, Raymond Corry	Managing Agent, Landale & Clark, Ld	11, Clive Street	ditto

Cordwell, Ernest Thomas	Assistant, Bird & Co	1-1, Clive Street	ditto
Cormack, Albert John	Manager (Calcutta Office), W T Henley's Telegraph Works Co, Ld	Old Court House Corner	ditto
Corn, Harry Edward, M I E	Manager, John Thompson (Wolverhampton), Ld	4, Fairlie Place	ditto
Cornah, W R	Tailor & Outfitter	18-B, Park Street	ditto
Corner, A C	Resident Engineer, International Automatic Telephone Co, Ld (London).	8, Clive Street	ditto
Corrie, Thomas Edgar	Partner, King Bros	102, Clive Street	ditto
Corsar, C L	Assistant, Mackinnon, Mackenzie & Co	16, Strand Road	ditto
Counsell, Arthur Hope	Branch Manager, Blackie & Son (India), Ld	285-11, Bowbazar Street	ditto
Coutts, A G	Asstt. Accountant, P & O Banking Corpn, Ld	1, Fairlie Place	ditto
Cowan, D S	Assistant, Balmer, Lawrie & Co, Ld	103, Clive Street	ditto
Cowper, Ian Hugh, M.A., B.COM	Accountant, Royal Calcutta Turf Club	11, Russell Street	ditto
Cox, C R	Director, Associated Instrument Manufacturers (India) Ld	B-5, Clive Buildings	ditto
Crabb, T D	Assistant, Octavius, Steel & Co, Ld	14, Old Court House Street	ditto
Crabtree, H H, M.A.	Professor, St Paul's Cathedral College	33-1, Amherst Street	ditto
Crabtree, Hubert Lord	Assistant, Andrew, Yule & Co Ld	8, Clive Row	ditto
Craig-Williams, Edward	Assistant, Bird & Co	1-1, Clive Street	ditto
Crasto, J R	Manager, R K O Radio Pictures, Ld	Tower House	ditto
Craven, Archer Roy	Managing Director, George Spencer, Moulton & Co (India), Ld	8, Esplanade, East	ditto
Crawford, C A	Officiating Deputy C C M, E I R	E I R House	ditto
Crawford, C E J, BA, BSc (Oxon)	Assistant, Imperial Chemical Industries (India), Ld	18, Strand Road	ditto

No.	Names.	Style or calling.	Residence or place of business.	Religion.
	Crawshaw, Joseph Sykes	Assistant, Ford, Rhodes, Thornton & Co	Tower House, Chowringhee Square	Christian
	Cree, T W	Assistant, Mackinnon, Mackenzie & Co	16, Strand Road	ditto
	Cresswell, A R	Manager, Sutton & Sons, Ld	35 & 36, Park Mansions	ditto
	Crichton, Frank	Assistant, Andrew, Yule & Co, Ld	8, Clive Row	ditto
	Crooks, G R	Assistant, Price, Waterhouse, Peat & Co	B-4, Clive Buildings	ditto
	Crosby-Flynn, G	Partner, India Oil Co	Stephen House	ditto
	Cross, C Stratton	Assistant, Remfry & Son	Stephen House	ditto
	Cruickshank, Geo	General Manager, Lipton, Ld	9, Weston Street	ditto
	Cruickshank, R D	Partner, Thomas, Seth Apcar & Co	8, Clive Street	ditto
	Cubitt, Frederick Salter	Secretary, Bengal Club	Bengal Club	ditto
	Cumberbatch. Hugh Douglas	Director, Andrew, Yule & Co, Ld	8, Clive Row	ditto
	Cumming, D J, ACA	Accountant, Imperial Chemical Industries (India), Ld	18, Strand Road	ditto
	Cummins, John Eric	Assistant, Ralli Bros, Ld	16, Hare Street	ditto
	Curlender, Hugh	Partner, S Curlender & Co	8, Old Court House Corner	Jew
	Curlender, J	Partner, S Curlender & Co	8, Old Court House Corner	ditto
	Curlender, Moses	Partner, S Curlender & Co	8, Old Court House Corner	ditto
	Curtis, R C	District Commercial Officer (Claims), B N R	4, Lord Sinha Road	Christian
	D			
	D'Costa, Oscar Hilter	Head Assistant, Bengal Secretariat, Commerce Department	Writers' Buildings	Christian
	Dale, Alfred George	Assistant, Andrew, Yule & Co, Ld	14, British Indian Street	ditto

Dalgarno, Douglas James	Director, Marshall Sons & Co (India), Ld	99, Clive Street	ditto
Dallas, J	Director, Willas Construction Co, Ld	19, Chowringhee	ditto
Dalziel, Alfred Robert Joslin	Head Engraver, Survey of India	13, Wood Street	ditto
Dand, J	Chief Accountant, Port Commissioners' Office	Strand Road	ditto
Daniel, F	Governing Director, Morrison & Cottle, Ld	30-C, Chowringhee	ditto
Darby, Stanley Charles	Manager, Prudential Assurance Co, Ld	Clive Buildings	ditto
Darling, H J	Chief Electrical Engineer, E I R	E I R House	ditto
David, Bernardine Carty	Director, Martin & Co	12, Mission Row	ditto
David, S	Assistant, F W Heilgers & Co	1-1, Clive Street	ditto
Davidson, Ronald James Robertson	Assistant, Andrew Yule & Co, Ld	8, Clive Row	ditto
Davidson, R O	Assistant, McLeod & Co	28, Dalhousie Square	ditto
Davidson, William Bruce	Partner, Cooke & Kelvey	20, Old Court House Street	ditto
Davies, Allen Haddon	Secretary, Imperial Tobacco Co of India, Ld	37, Chowringhee	ditto
Davies, H M	Dy. Chief Mechanical Engineer, E I R	E I R House	ditto
Davies, R H	Accountant, Grindlay & Co, Ld	6, Church Lane	ditto
Davis, G	Assistant, Shaw Wallace & Co	4, Bankshall Street	ditto
Davy, Horace Frederick	Controller of Inspection, Indian Stores Department	6, Esplanade, East	ditto
Dawson, James	Manager, Cox & Kings (Agents), Ld	5, Bankshall Street	ditto
Daymond, J B	Editor, *A A B Magazine*	46, Galstaun Mansions	ditto
Deane, E S (Capt)	Starter, Royal Calcutta Turf Club	11, Russell Street	ditto

No.	Names.	Style or calling.	Residence or place of business.	Religion.
	Deeks, William Gordon	Partner, Cooke & Kelvey	20, Old Court House Street	Christian
	Delph, C J	Representative for the East, Baird & Tatlock (London), Ld	Avenue House, Chowringhee Square	ditto
	Demetriadi, Constantine George	Assistant, Ralli Bros, Ld	16, Hare Street	ditto
	Demetrius, St. John	Chartered Accountant, George Read & Co	Avenue House, Chowringhee Square	ditto
	Dennett, B G	Director, Hall & Anderson, Ld	31, Chowringhee	ditto
	Dent, Eric Raymond	Junior Auditor, E B R	3, Koilaghat Street	ditto
	DePenning, H A	Manager, H V Williams & Co	12, Esplanade Mansions	ditto
	Devine, W N P	Asstt Editor, *Indian Aviation*	13, Ezra Mansions	ditto
	Dias, L	Head Assistant, Bengal Secretariat, Special Branch	Writers' Buildings	ditto
	Dickens, C E	District Signal Engineer, E I R	E I R House	ditto
	Dickson, David Law	Partner, Normans Ross & Co	3, Clive Street	ditto
	Dickson, James	Assistant Accountant, National Bank of India, Ld	104, Clive Street	ditto
	Dickson, William	Partner, Perman & Hynd	9, Clive Street	ditto
	Dignum, F A	Proprietor, L & H Dignum	8, Canning Street	ditto
	Dixon, John	Superintending Engineer, R S N Co, Ld	2, Fairlie Place	ditto
	Dobeson, Gerald Albert	Superintendent, Mercantile Marine Department	15-1, Strand Road	ditto
	Docherty, A S	Assistant, Balmer Lawrie & Co, Ld	103, Clive Street	ditto
	Dod, T F	Assistant, Shaw Wallace & Co	4, Bankshall Street	ditto
	Dodd, J O	Director, Hoyle Robson Barnett & Co (India), Ld	Tower House	ditto

Dods, G R	Assistant, Mackinnon. Mackenzie & Co	16, Strand Road	ditto
Doherty, G P M	Manager, Lloyds Bank, Ld	101-1, Clive Street	ditto
Donald, John Inglis	Accountant, National Bank of India, Ld	104, Clive Street	ditto
Donaldson, A A (C A)	Accountant, Burmah Shell Co of India Ld	Hongkong House	ditto
Donaldson, M	Partner, Manton & Co	13, Old Court House Street	ditto
Dorsett. G C	Manager, Commercial Pine Forests, Ld	4, Lyons Range	ditto
Douetil, Phillip Victor (Capt)	Secretary, Royal Calcutta Turf Club	11, Russell Street	ditto
Douglas, Thomas	Director, Duncan Brothers & Co, Ld	101, Clive Street	ditto
Dove, George Terence	Assistant, North British & Mercantile Insurance Co, Ld	101-1, Clive Street	ditto
Dow, Albert James	Director, J D Jones & Co, Ld	8, Clive Street	ditto
Downey, C E S	Representative, Crosse & Blackwell, Ld	29, Waterloo Street	ditto
Downie, Leslie W	Director, Don Watson & Co	19, British Indian Street	ditto
Doyle, David Colquhoun	Assistant, Andrew Yule & Co, Ld	8, Clive Row	ditto
Doyle, J F	Director, W Newman & Co, Ld	3, Old Court House Street	ditto
Dudley, Trevor Morgan	Engineer, Burmah Shell Co of India, Ld	Hongkong House	ditto
Duff, D Inglis	Assistant, Barry & Co	2, Fairlie Place	ditto
Duncan, J N	Cashier, B I S N Co, Ld	8, Strand Road	ditto
Duncan, R H C	Eastern Group Manager, Brooke Bond India, Ld	2, Metcalfe Street	ditto
Duncan, Thomas Charles	Partner, F C Pallachi & Co	7, Royal Exchange Place	ditto
Duncan, W R J	Tea Buyer, Harrisons & Crossfields, Ld	6, Church Lane	ditto

No.	Names.	Style or calling	Residence or place of business.	Religion.
	Dunlop, J	Superintending Engineer, B I S N Co, Ld	16, Strand Road	Christian
	Dunsford, Edward Henry	Assistant Construction Engineer, C E S C, Ld	Victoria House	ditto
	Duthie, Donald	Mains Engineer, C E S C, Ld	Victoria House	ditto
	Duttson, R D	Assistant, Burn & Co, Ld	12, Mission Row	ditto
	E			
	Eadie, W E	Senior Accountant, Burmah-Shell Co of India, Ld	Hongkong House	Christian
	Eastgate, C C T, M I M E	Electrical Engineer, Octavius Steel & Co, Ld	14, Old Court House Street	ditto
	Eatwell, G H F	Director, T E Bevan & Co, Ld	Grosvenor House	ditto
	Edgar, William Richard, B Sc	Principal, St. Thomas' School	58-B, Free School Street	ditto
	Edgley, G H G	Assistant, Lovelock & Lewes	4, Lyons Range	ditto
	Edmondson, T, F I A A	Government Architect, Bengal	Writers' Buildings	ditto
	Edney, E H	Assistant, Imperial Chemical Industries (India), Ltd	18, Strand Road	ditto
	Edward, R R	Director, Roberts, McLean & Co, Ld	101, Clive Street	ditto
	Edwards, Frank Vaughan	Assistant, Andrew Yule & Co, Ld	8, Clive Row	ditto
	Edwards, Leonard Brooke	Manager, The Baldwin Locomotive Works	5, Dalhousie Square	ditto
	Edwards, Lionel	Managing Director, Lionel, Edwards, Ld	D-1, Clive Buildings	ditto
	Elcock, James	General Manager, Planters' Stores & Agency Co, Ld	11, Clive Street	ditto
	Elder, A G	Assistant, Jardine, Skinner & Co	4, Clive Row	ditto
	Elias, I H	Personal Assistant to Director of Public Health, Bengal	Writers' Buildings	Semitic

Elias, Joseph Manasseh	Accountant, E D Sassoon & Co, Ld	101, Clive Street	Jew
Elias, M	Partner, M Elias & Co	100, Clive Street	ditto
Elias, N M	Partner, M Elias & Co	100, Clive Street	ditto
Elkan, C V	Director, Shalimar Paint, Colour, Varnish & Co, Ld	6, Lyons Range	Christian
Elkins, Antony Joseph	Assistant, Gillanders, Arbuthnot & Co	8, Clive Street	ditto
Elley, Thomas Benson	Director, Sinclair, Murray & Co, Ld	6, Royal Exchange Place	ditto
Elliot, M C	Accountant, The American Express Co (Inc)	14 & 15, Government Place	ditto
Elliot, Walter Robert	Assistant, Place, Siddons & Gough	6, Lyons Range	ditto
Elliott, Sydney Horace	Assistant Manager, I S S D	Chittaranjan Avenue, South	ditto
Ellis, E	Sub-Manager, E D Sassoon & Co	101, Clive Street	ditto
Ellis, Eric	Director, Eastern Federal Union Insurance, Co. Ld	9, Clive Street	Jew
Ellis, Jesse	Managing Director, Skoda (India), Ld	8, Royal Exchange Place	Christian
Ellis, J W	Director, Don Watson & Co	19, British Indian Street	ditto
Ellis, R	Superintendent, Licensed Measurer's Department	2, Clive Street	ditto
Ellis, W S	Acting Chief Engineer, Calcutta Tramways Co, Ld	7, Church Lane	ditto
Ellison, Eric Douglas Vernon	Assistant Controller of Inspection, Indian Stores Department	6, Esplanade East	ditto
Elmore, John Napier	Director, John S Elmore, Ld	7, Bow Bazar Street	ditto
Elsden, Smith Archibald	Assistant Construction Engineer, C E S C, Ld	Victoria House	ditto
Elton, Hubert, MA (Cantab)	Assistant, Burmah Shell Co of India, Ld	Hongkong House	ditto
Elton, J F	Partner, Kilburn & Co	4, Fairlie Place	ditto

No.	Names	Style or calling.	Residence or place of business.	Religion.
	Emeny, L H	Merchant	Mercantile Buildings	Christian
	Emery, William John Weymes	Assistant Mains Superintendent, C E S C, Ld	Victoria House	ditto
	Emmanuelov, V E	Civil Engineer, Bird & Co	1-1, Clive Street	ditto
	Eustace, Frank Henry	Salesman, W & T Avery, Ld	28-2, Waterloo Street	ditto
	Euthymopulo, George	Manager, Ralli Bros, Ld	16, Hare Street	ditto
	Evans, Ernest John	Manager, P & M Co (England), Ld	7, Council House Street	ditto
	Evans, James Amphlett Edwardes	Assistant, Hoare, Miller & Co, Ld	5, Fairlie Place	ditto
	Evans, James David	Manager (Turnery), Army & Navy Stores, Ld	41, Chowringhee	ditto
	Evans, John Philip	Assistant, Anderson, Wright & Co	22, Strand Road	ditto
	Evans, Reginald Ewart	Manager, Samuel, Fitze & Co, Ld	26, Chowringhee	ditto
	Evans, W	Proprietor, W Evans & Co	3, Mangoe Lane	ditto
	Evans, William Robert	Manager, W & T Avery, Ld	28-2, Waterloo Street	ditto
	Evans, W T	Manager, Wellington & Ward, Ld	Tower House, Chowringhee Square	ditto
	Ezekiel, Herbert	Partner, Normans, Ross & Co	3, Clive Street	Jew
	Ezra, D E	Partner, Edward & Co	Norton Buildings	ditto
	Ezra, Edward S	Partner, Edward & Co	Norton Buildings	ditto
	F			
	Fairbairn, Douglas Chisholm	Assistant Secretary, Bengal Chamber of Commerce	2, Clive Street	Christian
	Fairbrother, Valentine	Assistant, Spencer & Co, Ld	32, Chowringhee	ditto

Farquharson, John Robert	General Manager, Burmah-Shell Co of India, Ld	Hongkong House	ditto
Farrell, Dennis Joseph	Assistant, Begg, Dunlop & Co, Ld	2, Hare Street	ditto
Faulkner, George M	Director, Steiners, Ld	Mohta House, 29, Strand Road	ditto
Fawcett, John North	Manager (Stationery Deptt), Thacker, Spink & Co. (1933), Ld	3, Esplanade East	ditto
Fawkes, Percival Owen	Managing Director, Ranken & Co, Ld	4, Old Court House Street	ditto
Fearn, Reginald John, B Sc (Lond)	Principal, La Martiniere	11, Loudon Street	ditto
Ferguson, R W N	Chief Accountant, India Genl Navn & Ry Co, Ld	4, Fairlie Place	ditto
Ferrier, Charles Duncan, MA, B Sc	Assistant, Gillanders Arbuthnot & Co	8, Clive Street	ditto
Fettes, Kenneth Richard	Assistant, Gillanders Arbuthnot & Co	8, Clive Street	ditto
Field, Osmond James	Inspector, Smoke Nuisances Commission, Bengal	3, Charnok Place	ditto
Fielder, C J	Assistant, Turner, Morrison & Co, Ld	6, Lyons Range	ditto
Findlay, James	Assistant, Bird & Co	1-1, Clive Street	ditto
Findlay, John	Assistant, Keymer, Bagshawe & Co, Ld	4, Lyons Range	ditto
Findlay, W H	Assistant Accountant, P & O Banking Corporation, Ld	1, Fairlie Place	ditto
Finlay, Shaw	Assistant, Burn & Co, Ld	12, Mission Row	ditto
Finlayson, A, B Sc	Executive Engineer, Dredger Division	3, Charnock Place	ditto
Finney, A D	Assistant, Mackinnon, Mackenzie & Co	16, Strand Road	ditto
Fisher, A V	Partner, Lardner, North & Co	8, Strand Road	ditto
Fisher, J P	Waterproofing Engineer, John, Fisher & Co	B-5, Clive Buildings	ditto
Fisher, Noel Lincoln	Agent, Thos Cook & Son, Ld	4, Dalhousie Square	ditto

No.	Names.	Style or calling.	Residence or place of business.	Religion.
	Fisk, Frederick William ..	Director, Walter Bushnell, Ld	21, Old Court House Street ..	Christian
	Flangini, Panaghi Nicholas	Assistant, Ralli Bros, Ld	16, Hare Street	ditto
	Fleming, H C ..	Assistant, Turner, Morrison & Co, Ld	6, Lyons Range	ditto
	Fleming, Robert ..	Assistant, J C Duffus & Co, Ld	5, Fairlie Place	ditto
	Fletcher, T	Assistant, Imperial Chemical Industries (India), Ld	18, Strand Road	ditto
	Fletton, Alfred George ..	Accountant, Bengal Telephone Corporation, Ld ..	8, Hare Street	ditto
	Ford, A H	Assistant, Mackinnon, Mackenzie & Co	16, Strand Road	ditto
	Forrester, G D ..	Manager, Burmah Shell Co of India, Ld	Hongkong House	ditto
	Forsyth, T (Capt) ..	Assistant, Gladstone, Wyllie & Co	4, Fairlie Place	ditto
	Foster, A R, BSc (Lond)	Assistant, Imperial Chemical Industries (India), Ld	18, Strand Road	ditto
	Foster, J G (Capt) ..	Assistant, Kilburn & Co	4, Fairlie Place	ditto
	Foster, L S	Assistant, Place, Siddons & Gough	6, Lyons Range	ditto
	Foulis, James Craig ..	Stores Supdt, C E S C, Ld	Victoria House	ditto
	Fox, H L	Assistant, Mackinnon, Mackenzie & Co	16, Strand Road	ditto
	Fox, Herbert McDermott	Assistant, Andrew, Yule & Co, Ld ..	8, Clive Row	ditto
	Francis, C ..	Head Assistant, Poll (Jails) Deptt, Bengal ..	Writers' Buildings	ditto
	Francis, Dudley Wadlow	Assistant, London & Lancashire Insurance Co, Ld ..	2, Fairlie Place	ditto
	Fraser Archibald ..	Partner, Blacker & Co	2, Clive Street	ditto
	Fraser, D ..	Director, Don Watson & Co, Ld ..	19, British Indian Street ..	ditto

Fraser, James William (Capt)	Director, George O Penn (India), Ld	22, Chowringhee	ditto
Fraser, J N	Assistant, Octavius Steel & Co, Ld	14, Old Court House Street	ditto
Fraser, Roderick Donald	Manager, The Indo-Burma Petroleum Co, Ld	8, Clive Street	ditto
Fricker, Ernest Stanley Gibbs	Accountant, Planters' Stores & Agency Co, Ld	11, Clive Street	ditto
Fritchley, George Bowen	Architect, Martin & Co	12, Mission Row	ditto
Fritchley, Horace Christopher	Principal, Calcutta Boys' School	72, Corporation Street	ditto
Fuller, R U	Partner, Price, Waterhouse, Peat & Co	B4, Clive Buildings	ditto
Fyffe, F C	Assistant, Shaw, Wallace & Co,	4, Bankshall Street	ditto
G			
Gahan, Patrick Joseph	Controller of Purchase, Indian Stores Department	6, Esplanade, East	Christian
Gale, A C	Manager, American Foreign Insurance Association	8, Clive Street	ditto
Gallie, James	Assistant, Duncan Brothers & Co, Ld	101, Clive Street	ditto
Galloway, James E	Assistant, Andrew, Yule & Co, Ld	8, Clive Row	ditto
Gardner, Chas	Assistant Manager, Calcutta General Printing Co, Ld	300, Bowbazar Street	ditto
Gardner, G J	Assistant, Kettlewell, Bullen & Co, Ld	21, Strand Road	ditto
Gardner, H E	Assistant Accountant, The P & O Banking Corpn, Ld	1, Fairlie Place	ditto
Gardner, W G	Assistant, Asbestos Cement, Ld	135, Canning Street	ditto
Gardyne, Finlay	Assistant, Commercial Union Assurance Co, Ld	32, Dalhousie Square	ditto
Garland, A J	Agent, Jute Industries, Ld	1A, Hare Street	ditto
[illegible]	Assistant Tea Buyer, Brooke Bond India, Ld	2, Metcalfe Street	ditto

No.	Names.	Style or calling	Residence or place of business.	Religion.
	Garratt, B	Accountant, The P & O Banking Corpn, Ld	1, Fairlie Place	Christian
	Garrie, G M	Assistant, Thomas Duff & Co, Ld	3, Clive Row	ditto
	Gaynor, Harold Francis	Assistant, Bird & Co	1-1, Clive Street	ditto
	Gemmell, A	Managaer, Heatly and Gresham, Ld	6, Waterloo Street	ditto
	Gemmell, G W	Director, Balmer, Lawrie & Co, Ld	103, Clive Street	ditto
	George, Ernst William	Junior Auditor, E B R	3, Koilaghat Street	ditto
	George, H H, BE	Assistant, Associated Electrical Industries (India), Ld	8, Clive Street	ditto
	Gibb, David Valentine	Director, Andrew Yule & Co, Ld	8, Clive Row	ditto
	Gibson, F J B (Capt.)	Assistant Conservator, Port Commissioners' Office	Strand Road	ditto
	Gibson, J C	Deputy Agent, (Organisation), E I R	E I R House	ditto
	Gibson, John Mckenzie	Accountant, The Eastern Bank, Ld	9, Clive Street	ditto
	Gilbert, C F	Dy Agent, Works, E I R	E I R House	ditto
	Gill, H C F	Assistant, Lovelock & Lewes	4, Lyons Range	ditto
	Gill, Henry Hugh Beckwith	Manager, Standard Telephone & Cables, Ld	4, Esplanade East	ditto
	Gillespie, A T	Merchant	13, Government Place, East	ditto
	Ginivan, Edward	Manager, Carr & Co, Ld	3, Waterloo Street	ditto
	Girling, Eustace George, B sc	Engineer, Martin & Co	12, Mission Row	ditto
	Girvan, R T	Director, Associated Instrument Manufacturers (India), Ld	B-5, Clive Buildings	ditto
	Gladstone, Thomas Steuart	Manager, Gillanders, Arbuthnot & Co	8, Clive Street	ditto

Glenn, Eric Birch	Manager, Boots Pure Drug Co, Ld	Mercantile Buildings	ditto
Glennie, J D F	Resident	7-1, Lord Sinha Road	ditto
Gloag, Alstair Francis	Manager, A & J Main & Co, Ld	10, Clive Street	ditto
Glover, R P	Assistant, Turner Morrison & Co, Ld	6, Lyons Range	ditto
Goddard, W D	Director, Ingersoll Rand (India), Ld	15, Clive Street	ditto
Godfrey, Walter, BA	Assistant to H M's Senior Trade Commissioner in India	4, Fairlie Place	ditto
Godley, T	Executive Engineer, Calcutta Tramways Co, Ld	7, Church Lane	ditto
Godwin, J L	Manager, Simons Motor Units of India, Ld	7, Chittaranjan Avenue	ditto
Goff, G H	Dist Traffic Superintendent, E B R	3, Koilaghat Street	ditto
Golder, James Horace	Manager, Central Forms Store	166, Dharamtala Street	ditto
Golledge, Stephen Edward	Assistant, A & J Main & Co, Ld	10, Clive Street	ditto
Gomes, Robert, MA	Professor, St Xavier's College	30, Park Street	ditto
Gooding, O	Manager, Hall & Anderson, Ld	31, Chowringhee	ditto
Gordon, William Law	Partner, Macneill & Co	2, Fairlie Place	ditto
Gosling, G W	Director, Martin & Harris, Ld	17, Prinsep Street	ditto
Goss, Ernest Cyril	Assistant, F W Heilgers & Co	1-1, Clive Street	ditto
Gossland, A	Asstt Manager, Dorman Long & Co, Ld	8, Cilve Street	ditto
Gourlay, James Simpson	Assistant, Allahabad Bank, Ld	6, Royal Exchange Place	ditto
Gow, W	General Manager, Howrah Iron Works	12, Mission Row	ditto
Goward, Ernest Evelyn	Assistant, Imperial Chemical Industries (India), Ld	18, Strand Road	ditto

No.	Names.	Style or calling.	Residence or place of business.	Religion.
	Gracie, Frank	Director, Imperial Tobacco Co of India, Ld	37, Chowringhee	Christian
	Graham, C V	Assistant, Jessop & Co, Ltd	93, Clive Street	ditto
	Graham, John St Aidan Irvine	Manager, United Steel Co (India), Ld	4. Lyons Range	ditto
	Graham, John Stevenson	Director, Duncan Brothers & Co, Ld	101, Clive Street	ditto
	Graham, W A	Travel Representative, The American Express Co, Inc	14 & 15, Government Place	ditto
	Grant, C W	Assistant, I G N & Ry Co, Ld	4, Fairlie Place	ditto
	Grant, D T	Sub-Accountant, The Eastern Bank, Ld	9, Clive Street	ditto
	Grant, E	Assistant, Jessop & Co, Ld	93, Clive Street	ditto
	Grant, Francis Herbert	Head Draftsman, Survey of India (Drawing)	13, Wood Street	ditto
	Grant, John	Partner, Graham Roberts & Co	5, Fairlie Place	ditto
	Grant, Robert	Chief Inspector and Secretary, Bengal Smoke Nuisances Commission	3, Charnock Place	ditto
	Gray, Donald S	General Manager for India, Standard Vacuum Oil Co	6, Church Lane	ditto
	Gray, J M	Assistant, Grahams Trading Co (India), Ld	6, Lyons Range	ditto
	Gray, Marcus Dods, MA	Professor, Scottish Church College	4, Cornwallis Square	ditto
	Gray, Stewart	Partner, Reed Ward & Co	6, Lyons Range	ditto
	Greaves, Phillip	Artist, *Statesman*, Ld	Statesman House	ditto
	Green, Henry	Resident	52, Elliot Road	ditto
	Green, N M	Accountant, Chartered Bank of India, Australia and China	1-1, Clive Street	ditto
	Greene, Albert George	Assistant Engineer, Bengal Telephone Corporation, Ld	8, Hare Street	ditto

Greig, Hamish Adams, OA	Director, Standard Literature Co, Ld	13-1, Old Court House Street	ditto
Gresham, S R	Director, Heatly & Gresham, Ld	6, Waterloo Street	ditto
Grewar, A K	Assistant, Thomas Duff & Co, Ld	3, Clive Row	ditto
Grice, W H	Manager, Imperial Chemical Industries (India), Ld	18, Strand Road	ditto
Griffin, B B	Manager, Ever Ready Co (India), Ld	19-B, British Indian Street	ditto
Griffin-Chave, Frederick Thomas	General Manager, F & C Osler, Ld	12, Old Court House Street	ditto
Griffith, Richard Graham, BA	Assistant, Williamson Magor & Co	4, Mangoe Lane	ditto
Griffiths, Walter Ace	Assistant, Burmah Shell Co of India, Ltd	Hongkong House	ditto
Grimsdick, E P, AMIE	Managing Director and General Manager, Associated Electrical Industries (India), Ld	8, Clive Street	ditto
Grimshaw, Arthur	Works Manager, Kodak, Ld	17, Park Street	ditto
Grove, Eric Harry	Assistant, Gillanders, Arbuthnot & Co	8, Clive Street	ditto
Grover, G H	Assistant, Imperial Chemical Industries (India), Ltd	18, Strand Road	ditto
Growcott, D R	Assistant, Shaw, Wallace & Co	4, Bankshall Street	ditto
Gubbay, A R	Proprietor, D A Gubbay & Co	6, Pollock Street	Jew
Gubbay, Ezekiel Joseph	Partner, H D Cartwright & Co	8, Clive Street	ditto
Gumbrill, A	Publicity Officer, C C M's Office, E I R	E I R House	Christian
Gunn, T B	Assistant, Imperial Chemical Industries (India), Ld	18, Strand Road	ditto
Gunning, John George	Assistant, Ludlow Jute Co, Ltd	7, Royal Exchange Place	ditto
Gunnis, T G	Electrical Engineer, Balmer Lawrie & Co, Ld	103, Clive Street	ditto
Guthrie, Frederick Charles	Manager, James Finlay & Co, Ld	1, Clive Street	ditto

No.	Names	Style or calling.	Residence or place of business.	Religion
	Guthrie, James	Assistant Commercial Manager, C E S C, Ld	Victoria House	Christian
	Guthrie, J H	Manager, Babcock & Wilcox, Ld	4, Bankshall Street	ditto
	Guy, Ernest Harold	Assistant, Planters' Stores & Agency Co, Ld	11, Clive Street	ditto
	Gye, Norman Dato	Partner, W S Cresswell & Co	3, Clive Street	ditto
	H			
	Haddow, R	Assistant, Shaw, Wallace & Co	4, Bankshall Street	Christian
	Haddow, R R	Partner, Mackinnon, Mackenzie & Co	16, Strand Road	ditto
	Haigh, Geo	General Manager, A K Dn, Remington Rand Inc	3, Council House Street	ditto
	Hall, Cecil Byng	Partner, Normans Ross & Co	3, Clive Street	ditto
	Hall, P N	Governing Director, Hall & Anderson, Ld	31, Chowringhee	ditto
	Halpern, Walter Kenneth Leopold	Sales Manager, Butterworth & Co (India), Ld	Avenue House	ditto
	Hamilton, John	Actg Manager, Standard Life Assurance Co	34, Dalhousie Square	ditto
	Hamilton, Kenneth Allen	Branch Manager, Army & Navy Co-operative Society, Ld	41, Chowringhee	ditto
	Hammond, Keith	Assistant, Andrew Yule & Co, Ld	8, Clive Row	ditto
	Hampson, A E	Sales Manager, Jenson & Nicholson (India), Ld	2, Fairlie Place	ditto
	Hannay, J M (Capt)	Ag Superintendent, B I S N Co, Ld	8, Strand Road	ditto
	Harding, H R, AMIE	Assistant, Associated Electrical Industries (India), Ld	8, Clive Street	ditto
	Hards, Richard Leo	Engineer, Begg Dunlop & Co, Ld	2, Hare Street	ditto
	Harley, A H, MA	Principal, Islamia College	8, Wellesley Street	ditto
	Harmer, W T Vizer	Manager, Bengal Iron Co, Ld	4, Lyons Range	ditto

Harper, J B	Managing Director, Ivan Jones, Ld	8, Dalhousie Square, East	ditto
Harris, E F (Capt.)	Cargo Superintendent, Mackinnon Mackenzie & Co	8, Strand Road	ditto
Harris, Maurice George Robert	Director, Martin and Harris, Ld	17, Prinsep Street	ditto
Harris, N D, MA	Chief Accountant, Imperial Chemical Industries (India), Ld	18, Strand Road	ditto
Harrison, Frank Seymour	Manager, South British Insurance Co, Ld	5, Clive Street	ditto
Harrison, S J	Construction Superintendent, C E S C, Ld	Victoria House	ditto
Hart, Charles Alfred	Engineer, Imperial Tobacco Co of India, Ld	37, Chowringhee	ditto
Hartley, Frederick Mathews	Assistant, Place, Siddons and Gough	6, Lyons Range	ditto
Hartley, K J H	Assistant, Price Waterhouse, Peat & Co	B-4, Clive Buildings	ditto
Harvey, B L, OBE	Dy Chief Engineer (North), E B R	3, Kaylaghata Street	ditto
Harvey, Ernest William	Manager, Ludlow Jute Co, Ld	7, Royal Exchange Place	ditto
Harvey, S	Director, Roberts McLean & Co, Ld	101, Clive Street	ditto
Hatch, Keith (Major)	Asstt Secretary, Royal Calcutta Turf Club	11, Russell Srreet	ditto
Hatfield, C R	Partner, Shaw Wallace & Co	4, Bankshall Street	ditto
Hawes, G L	Manager, Norwich Union Fire Insurance Society, Ld	2, Hare Street	ditto
Haynes, Stanley Tom	Assistant, Phœnix Assurance Co, Ld	28, Dalhousie Square	ditto
Haywood, J S	Proprietor, J S Haywood & Co	7, Lyons Range	ditto
Haywood, Rogers	Partner, Piggott, Chapman & Co	6, Lyons Range	ditto
Heape, Charles Herbert	Partner, Place, Siddons & Gough	6, Lyons Range	ditto
Hearn, Owen	Manager, Cutler Palmer & Co	10, Government Place, East	ditto
Heath, J F	Director, Guest, Keen, Williams, Ld	7, Council House Street	ditto
Heath. Roland Harding	Secretary, J B Norton & Sons, Ld	Norton Buildings	ditto

No.	Names.	Style or calling.	Residence or place of business.	Religion.
	Heath, W A H	District Manager, Govan Bros, Ld	20, Park Street	Christian
	Hechle, James Rea	Assistant, Place, Siddons and Gough	6, Lyons Range	ditto
	Heesom, Brian Gilford	Accountant, Begg Dunlop & Co, Ld	2, Hare Street	ditto
	Hele, H E	Manager, H J Foster & Co, Ld	Sassoon House	ditto
	Henderson, C E	Accountant, Hongkong and Shanghai Banking Corpn	Hongkong House	ditto
	Henderson, Douglas Hedley Phelips	Mains Engineer, C E S C Ld	Victoria House	ditto
	Henderson, D S	Managing Director, D L Millar & Co, Ld	28, Dalhousie Square, West	ditto
	Henderson, T	Director, Mackintosh, Burn, Ld	8, Clive Street	ditto
	Hendry, D, MC, BSc	Director, Imperial Chemical Industries (India), Ld	18, Strand Road	ditto
	Henfrey, J B F	Asstt Supdt, Bengal Chamber of Commerce	2, Clive Street	ditto
	Henry, Claude Francis	Assistant, Bird & Co	1-1, Clive Street	ditto
	Herbert, N G	Assistant, Imperial Chemical Industries (India), Ld	18, Strand Road	ditto
	Herd, Alan L	Engineer, Mackintosh, Burn, Ld	8, Clive Street	ditto
	Herridge, W J	Manager, Calcutta Claims Bureau	26, Dalhousie Square	ditto
	Hetherington, E C	Manager, Grindlay & Co, Ld	6, Church Lane	ditto
	Hewett, Harry Meiklan Prescott	Assistant, Andrew Yule & Co, Ld	8, Clive Row	ditto
	Hewison, A	Superintending Engineer, I G N & Ry Co, Ld	4, Fairlie Place	ditto
	Higgins, John	Stipendiary Steward, Royal Calcutta Turf Club	11, Russell Street	ditto
	Higginson, J R	Accountant, Burmah Shell Co of India, Ld	Hongkong House	ditto
	Highet, I H C	Accountant, Hongkong and Shanghai Banking Corpn	Hongkong House	ditto

Hill, F J	Asstt. Accountant, P & O Banking Corpn, Ld	1, Fairlie Place	ditto
Hill, Lancelot E	Accountant, David Sassoon & Co, Ld	4, Lyons Range	ditto
Hillier, Victor Florian	Assistant, Davenport & Co, Ld	6, Church Lane	ditto
Hines, Thomas Austin	Manager, American Express Co, Inc	14, Government Place, East	ditto
Hingston, Cecil Victor	Chief Valuer, Calcutta Improvement Trust	5, Clive Street	ditto
Hinton, Cyril Herbert, BSC	Assistant, Martin & Co	12, Mission Row	ditto
Hocken, Garth	Assistant, Bird & Co	1-1, Clive Street	ditto
Hodgson, John B	Director, Lionel Edwards, Ld	D-1, Clive Buildings	ditto
Hodgson, Richard Claud	Assistant, Sales Department, Imperial Tobacco Co of India, Ld	37, Chowringhee	ditto
Hodkinson, James	Engineer, Craven Bros (India), Ld	101, Clive Street	ditto
Hoerder, Paul Eugine Robert	Assistant, Bird & Co	1-1, Clive Street	ditto
Hogarth, Robert Robison	Assistant, James Finlay & Co, Ld	1, Clive Street	ditto
Hogben, Ernest James, MA (Oxon)	Principal, Calcutta Technical School	110, Surendra Nath Banerji Road	ditto
Hoggan, Thos	Engineer, Mackintosh Burn, Ld	8, Clive Street	ditto
Hoggan, W A	Assistant, Bird & Co	1-1, Clive Street	ditto
Hogshaw, F H	Superintending Engineer, Central Circle, P W D	Writers' Buildings	ditto
Hollies, A W C	Branch Manager, Pearl Assurance Co, Ld	8, Clive Street	ditto
Holloway, R B	Director, Hall & Anderson, Ld	31, Chowringhee	ditto
Holmes, Charles H	Managing Director, Holmes, Wilson & Co, Ld	Norton Buildings	ditto
Holt, Alfred Rayner	Resident Manager, Royal Exchange Assurance	1 & 2, Old Court House Corner	ditto
Homan, F T	Agent, C E S C, Ld	Victoria House	ditto

No.	Names.	Style or calling.	Residence or place of business.	Religion.
	Hood, Fredrick William Edward	Assistant, Andrew, Yule & Co, Ld	8, Clive Row	Christian
	Hooper, C T G	Managing Director, Air Conditioning Corporation, Ld	8, Esplanade Mansions	ditto
	Horton, G S	Partner, J Thomas & Co	8, Mission Row	ditto
	Horton, W H F K	Assistant, Imperial Chemical Industries (India), Ld	18, Strand Road	ditto
	Hosie, Alexander Lindsay	Partner, Ziffo & Co	5, Garstins Place	ditto
	Hossack, John	Manager, Harman & Co, Ld	11, Government Place	ditto
	House, A H	Professor, Presidency College	86-1, College Street	ditto
	Howe, H	Deputy Chief Engineer, C E's Office, E I R	E I R House	ditto
	Howell, Percy Poynton	Manager, Eagle Star & British Dominion Insurance Co, Ld	21, Strand Road	ditto
	Howie, James Bruce	Manager, Fraser & Co, Ld	4, Fairlie Place	ditto
	Hudson, G W	Asstt Manager, Norwich Union Fire Insce Socy, Ld	2, Hare Street	ditto
	Huggett, C G	Assistant, Hall & Anderson, Ld	31, Chowringhee	ditto
	Hughes, A R, F R G S	Resident Director, Commercial Pine Forests, Ld	4, Lyons Range	ditto
	Hughes, J R	Assistant, Imperial Chemical Industries (India), Ltd	18, Strand Road	ditto
	Hughff, R G	Supdt, Mech Records, C M E's Office, E I R	E I R House	ditto
	Hull, F J	Supervising Director, Remington Rand Inc	3, Council House Street	ditto
	Humby, A V	Assistant Controller of Inspection, Indian Stores Deptt	6, Esplanade East	ditto
	Humphreys, H L	Actuary, National Insurance Co, Ld	7, Council House Street	ditto
	Humphreys, Llewelyn Errington	Representative, Ralph Paxton	10, Lall Bazar	ditto
	Hummer, James R	Sub-Accountant, National City Bank of New York	4, Clive Street	ditto

Hunt, Natheniel Harvey	Manager, The Gas Accumulator Co. (India), Ld	12, Mission Row	ditto
Hunter, George William	Assistant, Accounting Department, Imperial Tobacco Co of India, Ld	37, Chowringhee	ditto
Hunter, Harry Claude Arnele	Manager and Underwriter, Commercial Union Assurance Co, Ld	32, Dalhousie Square	ditto
Hunter, R F	Director, Imperial Chemical Industries (India), Ld	18, Strand Road	ditto
Hunter, William	Manager, Gillanders, Arbuthnot & Co	8, Clive Street	ditto
Hurst, W H	Assistant, Shaw, Wallace & Co	4, Bankshall Street	ditto
Hutchinson, William	Resident Partner, Ford, Rhodes, Thornton & Co	Tower House, Chowringhee Square	ditto
Hutchison, Hugh Arbuckle	Engineer, Machine Tools (India), Ld	Stephen House	ditto
Hutson, Frederick Raymond	Director, The Britannia Biscuit Co, Ld	5, Dalhousie Square	ditto
Hutteroth, William Graham	Director, Morrison & Cottle, Ld	30C, Chowringhee	ditto
Hutton-Williams, Brent Elworthy	Manager, D J Keymer & Co, Ld	4, Lyons Range	ditto
Hyland, Frank George	Engineer, Bengal Telephone Corporation, Ld	8, Hare Street	ditto
I			
Imrie, Kenneth Erskine	Joint Manager, Nestle & Anglo-Swiss Condensed Milk (Export) Co, Ld	9-A, Clive Street	Christian
Inglis, Fredrick	Assistant, Bird & Co	1-1, Clive Street	ditto
Inglis, James Alexander	Manager, James, Finlay & Co, Ld	1, Clive Street	ditto
Innes, Charles Alexander	Assistant, Andrew, Yule & Co, Ld	8, Clive Row	ditto
Ironside, W B	Director, Holmes Wilson & Co, Ld	Norton Buildings	ditto
Irvine, William S	Manager, Mackenzie, Lyall & Co	5, Mission Row	ditto
Irwin, R De V	Dy Chief Mech Engineer, E B Ry	3, Koilaghat Street	ditto

No.	Names.	Style or calling.	Residence or place of business.	Religion.
	J			
	Jack, A	Assistant, Turner Morrison & Co, Ld	6, Lyons Range	Christian
	Jackson, Frank Nicholson	Traffic Manager, Imperial Tobacco Co of India, Ld	37, Chowringhee	ditto
	Jackson, Henry Kenneth	Assistant, Prudential Assce Co, Ltd	Clive Buildings	ditto
	Jackson, H L	Resident Secretary, London and Lancashire Insurance Co, Ld	2, Fairlie Place	ditto
	Jacob, J E	Assistant, Remington Rand Inc	3, Council House Street	Jew
	Jacques, William Alan Innes	Assistant, Alliance Assurance Co	2, Hare Street	Christian
	James, R H	Assistant Traffic Superintendent, Eastern Bengal Railway	3, Koilaghat Street	ditto
	Jardine, A, DSC	Director, Jessop & Co, Ld	93, Clive Street	ditto
	Jenkins, Dr Walter Allen, DSC	Spl Officer for Secondary Education	Writers' Buildings	ditto
	Jenner, Charles Herbet	Assistant, Bird & Co	1-1 Clive Street	ditto
	Jepson, Richard Ainslie	Secretary, Automobile Association, Bengal	40, Chowringhee	ditto
	Jonah, Isaac	Assistant, Arnhold & Co, Ld	100, Clive Street	Jew
	Johnson, A E	Assistant, Hall & Anderson, Ld	31, Chowringhee	Christian
	Johnson, Arthur	Engineer, Bengal Telephone Corporation, Ld	8, Hare Street	ditto
	Johnson, Charles Edgar	Manager, W H Harton & Co, Ld	5, Clive Ghat Street	ditto
	Johnson, C J	Superintendent, Central Registry, E I R	E I R House	ditto
	Johnson, Harry Howlett	Assistant, South British Insurance Co, Ld	5, Clive Street	ditto
	Johnston, E D	Partner, H D Cartwright & Co	14, Clive Row	ditto
	Johnston, Gavin Smith	Assistant, Place, Siddons & Gough	6, Lyons Range	ditto

Johnston, John Kidd	Partner, Macneill & Co	2, Fairlie Place	ditto
Johnstone, Eric Forber, Lt.-Col., RE	General Manager, Martin & Co	12, Mission Row	ditto
Joliffe, Alexander	Assistant, Macneill & Co	2, Fairlie Place	ditto
Jones, Alan Foster	Assistant, Asbestos Cement, Ld	135, Canning Street	ditto
Jones, E E	Bridge Engineer, E B R	3, Koilaghat Street	ditto
Jones, H G	Dy Chief Mechanical Engineer, E I R	E I R House	ditto
Jones, James	Manager, James, Finlay & Co, Ld	1, Clive Street	ditto
Jones, Merlin	Assistant Curator, Govt. Gardens	Eden Gardens	ditto
Jones, S L	Assistant, Price, Waterhouse, Peat & Co	B-4, Clive Buildings	ditto
Jones, W J	Chief Accounts Officer, E B R	3, Koilaghat Street	ditto
Judah, Emanuel Joseph	Director, Andrew, Yule & Co, Ld	8, Clive Row	Jew
Just, A H	Assistant, Price, Waterhouse, Peat & Co	B-4, Clive Buildings	Christian
K			
Kay, James Reid	Manager, James, Finlay & Co, Ld	1, Clive Street	Christian
Keddie, Charles MacKay	Assistant, Ralli Bros, Ld	16, Hare Street	ditto
Keillar, John Ridley	Manager, Symonds & Co	11, Clive Street	ditto
Kellner, C V R	Superintendent, I G N Ry Co, Ld	Nimtalla Ghat	ditto
Kells, George Edward	Mains Engineer, C E S C, Ld	Victoria House	ditto
Kelly, F D	Manager, Dodge & Seymour, Ld	Tower House, Chowringhee Square	ditto
Kelly, H C	Director, C Lazarus & Co, Ld	18, Park Street	ditto
Kelly, W T	Assistant, McLeod & Co	28, Dalhousie Square	ditto

No.	Names.	Style or calling.	Residence or place of business.	Religion.
	Kember, E W	Tea Buyer, Brooke Bond India, Ld	2, Metcalfe Street	Christian
	Kenderdine, E R	Assistant, Reed Ward & Co	6, Lyons Range	ditto
	Kendrick, C	Assistant, Gladstone Wyllie & Co	4, Fairlie Place	ditto
	Kent, G C H	Partner, Kilburn & Co	4, Fairlie Place	ditto
	Ker, John Stanley	Partner, Place, Siddons & Gough	6, Lyons Range	ditto
	Kidd, George	Manager, The Indian School Supply Depot	Chittaranjan Avenue, South	ditto
	Kidd, T	Superintendent, C M E's Office, E I R	E I R House	ditto
	Kilsby, W E	Manager, Calcutta General Printing Co, Ld	300, Bowbazar Street	ditto
	King, H	Director, Hoyle Robson, Barnett & Co (India), Ld	Tower House	ditto
	King, M H	Executive Engineer, Port Commissioners' Office	Strand Road	ditto
	King, Millar Lord	Secretary and Director, John King & Co, Ld	9, Prince Mansions, Middleton Row	ditto
	King, S A	Manager (Produce), Grahams Trading Co (India), Ld	6, Lyons Range	ditto
	King, Tom	Assistant Manager, Linotype and Machinery, Ld	21, Bowbazar Street	ditto
	King, W W	Director, Air Conditioning Corporation, Ld	8, Esplanade Mansions	ditto
	Kingcome, Charles	Assistant, Andrew, Yule & Co, Ld	8, Clive Row	ditto
	Kinloch, D R	Agent, Chartered Bank of India, Australia & China	1-1, Clive Street	ditto
	Kinsella, Herbert Joseph	Manager, Jost's Engineering Co, Ld	9B, Mercantile Buildings	ditto
	Kirk, Joseph Benjamin	Sales Manager, Roneo, Ld	32-1, Dalhousie Square	ditto
	Knight, George Ernest	Assistant, Prudential Assurance Co, Ld	Clive Buildings	ditto
	Knights, S J	Accountant, Spencer & Co, Ld	32, Chowringhee	ditto

Knowles, Thos	Director, Don Watson & Co	19, British Indian Street	ditto
Knox, Archbald Septimers	Engineer, Scott & Saxby, Ld	19, British Indian Street	ditto
Korni, Michael Alexandravitch (Dr.)	Assistant, Bird & Co	1-1, Clive Street	ditto
L			
Lacamp, Adrian	Assistant Superintendent, Mathematical Instrument Office, Survey of India.	15, Wood Street	Christian
Lagden, R B	Partner, McLeod & Co	28, Dalhousie Square	ditto
Laidlaw, J A	Assistant District Manager, Dunlop Rubber Co (India), Ld	42, Free School Street	ditto
Laing, D	Manager, D Gestetner (India), Ld	32, Grosvenor House	ditto
Laird, T H	Assistant, McLeod & Co	28, Dalhousie Square	ditto
Laird, William Duncan Shaw	Director, R Sim & Co, Ld	2, Clive Row	ditto
Lake, Charles James	Proprietor, J J C Bell	9, Clive Street	ditto
Lake, W G	Superintendent, I G N & Ry Co, Ld	4, Fairlie Place	ditto
Lancaster, C E A	Sales Manager, Stewart & Co, Ld	57, Park Street	ditto
Lander, George	Director, Walter, Bushnell, Ld	21, Old Court House Street	ditto
Lane, Francis John	Assistant Manager, T E Thomson & Co, Ld	9, Esplanade East	ditto
Lane, W E	Director, The Gas Accumulator Co (India), Ld	12, Mission Row	ditto
Lang, H M	Assistant, Mackinnon, Mackenzie & Co	16, Strand Road	ditto
Langham, E A	Manager, Aluminium Manufacturing Co, Ld	9, Clive Street	ditto
Lansdell, A L	Director, C Lazarus & Co	17, Park Street	ditto
Latimar, James	Assistant, Macneill & Co	2, Fairlie Place	ditto
Laurie, Joseph Henry	Assistant, Anderson, Wright & Co	22, Strand Road	ditto

No.	Names.	Style or calling.	Residence or place of business.	Religion.
	Lavalette, W C	Partner, Dalhousie Shipping and Agency Co	Norton Buildings	Christian
	Laver, Arthur Victor	Partner, Stewart & Co	8, Clive Street	ditto
	Law, Ian McKay	Director, Moran & Co, Ld	4, Lyons Range	ditto
	Lawton, Samuel Peter	Assistant Manager, F & C Osler, Ld	12, Old Court House Street	ditto
	Leaber, Chester R	Manager, National City Bank of New York	4, Clive Street	ditto
	Leake, Francis William	Manager, British Insulated Cables, Ld	2, Waterloo Street	ditto
	Leake, W R	Assistant, Jessop & Co, Ld	93, Clive Street	ditto
	Leathem, James Martin	Manager, Planters' Stores & Agency Co, Ld	11, Clive Street	ditto
	Leckie, David John	Manager, James, Finlay & Co, Ld	1, Clive Street	ditto
	LeCocq, Jaffrey Mellish	Partner, Sinclair & Co	5, Commercial Buildings	ditto
	Lee, Clifford Harbour	Proprietor, C H Lee & Co	137, Canning Street	ditto
	Lee-Emery, William Robert	Assistant, F W Heilgers & Co	1-1, Clive Street	ditto
	Leeming, A J	Assistant, Shaw, Wallace & Co	4, Bankshall Street	ditto
	Lees, F G	Director, H Hobbs & Co, Ld	9, Old Court House Street	ditto
	Leeson, E B	Partner, R B Rodda & Co	2, Wellesley Place	ditto
	Lee-Ure, John	General Manager, Roneo, Ld	32-1, Dalhousie Square	ditto
	LeFeuvre, C O	Assistant Executive Engineer, Port Commissioners' Office	Strand Road	ditto
	Leisk, J	Director, Guest, Keen, Williams, Ld	7, Council House Street	ditto
	Leisk, John	Manager, Macbeth Brothers & Co, Ld	7, Council House Street	ditto
	Lennie, Magnus Slater	Chief Accountant, C E S C, Ld	Victoria House	ditto

Leonard, L F	Managing Director, W Newman & Co, Ld	3, Old Court House Street	ditto
Levy, H C	Director, T E Bevan & Co, Ld	Grosvenor House	ditto
Lewis, Frank Vincent	Assistant, Martin & Co	12, Mission Row	ditto
Lewis, S R	Office Manager, United Artists Corpn of New York	Tower House	ditto
Lewis, W E	General Sales Manager, Remington Rand Inc	3, Council House Street	ditto
Lewis, W T	Assistant, Jessop & Co, Ld	93, Clive Street	ditto
Limboussi, George Constantine	Assistant, Ralli Bros, Ld	16, Hare Street	ditto
Little, Frederick Sinister	Director, Blackwood, Bryson & Co, Ld	2, Mangoe Lane	ditto
Littlejohn, James	Asstt Manager, The Indo-Burma Petroleum Co, Ld	8, Clive Street	ditto
Liversedge, Frederick George, ACA	Accountant, Martin & Co	12, Mission Row	ditto
Livingston, Alexander	Manager, Kalamazoo, Ld	2 & 3, Clive Row	ditto
Livingston, W MacCallum	Branch Manager, The Central Agency, Ld	2, Old Court House Corner	ditto
Llewellin, John Clarence	Bank Officer, Imperial Bank of India	Strand Road	ditto
Lloyd, G V	Director, Turner Morrison & Co, Ld	6, Lyons Range	ditto
Lock, W H (Capt.)	Partner, Breakwell & Co	44, Free School Street	ditto
Locke, Edwin Albert	Assistant, Lipton, Ld	9, Weston Street	ditto
Lockhart, A R E	Assistant, Gladstone, Wyllie & Co	4, Fairlie Place	ditto
Logan, Alex	Director, J D Jones & Co, Ld	8, Clive Street	ditto
Long, A L V	Asstt Manager, Babcock & Wilcox, Ld	4, Bankshall Street	ditto
Longair, David William	Assistant, Landale & Clark, Ld	11, Clive Street	ditto
Longbottom, J	Assistant, Balmer, Lawrie & Co, Ld	103, Clive Street	ditto
Longden, G J M BA, LLB	Secretary, Imperial Chemical Industries (India), Ld	18, Strand Road	ditto

No.	Names.	Style or calling.	Residence or place of business.	Religion
	Longfield, T C	Assistant, Andrew Yule & Co. Ld	8, Clive Row	Christian
	Longland, John Perry	Director and Secretary, Alfred Herbert (India), Ld	13-3, Strand Road	ditto
	Lonie, John	Manager, Ericsson Telephones. Ld	21, Old Court House Street	ditto
	Lord, R W	Manager, Golabarry (Jute Pressing) Co, Ld	244, Upper Chitpore Road	ditto
	Lothrop, Mark Drew	Auditor, Ludlow Jute Co, Ld	7, Royal Exchange Place	ditto
	Lowe, G C	Assistant, Burn & Co, Ld	12, Mission Row	ditto
	Lowles, Maurice George Raymond	Assistant, Birkmyre Bros	8, Clive Row	ditto
	Lowndes, Maurice Wyndham, BA (Oxon).	Assistant, Bombay Co, Ld	19, British Indian Street	ditto
	Luke, H A	Partner, W Haworth & Co	1, Commercial Buildings	ditto
	Luke, Norman R	Partner, James, Luke & Sons	7, Royal Exchange Place	ditto
	Lunan, William John	Assistant, Allahabad Bank, Ld	6, Royal Exchange Place	ditto
	Lush, Gerald Harding	Assistant, Gillanders, Arbuthnot & Co	8, Clive Street	ditto
	Luson, H	Engineer, Bengal Telephone Corporation, Ld	8, Hare Street	ditto
	Lutyens, F M B	Director, Geo Henderson & Co, Ld	101-1, Clive Street	ditto
	Lyell, A L	Assistant, Shaw, Wallace & Co	4, Bankshall Street	ditto
	Lyne, Edwin	Assistant, Hoare Miller & Co, Ld	5, Fairlie Place	ditto
	Lyttelton, Stephen Clive	Manager, Gillanders, Arbuthnot & Co	8, Clive Street	ditto
	M			
	Mabey, H A	Accountant, Hongkong & Shanghai Banking Corpn	Hongkong House	Christian.
	MacCrimman, Alexander Gillies	Assistant, Macneill & Co	2, Fairlie Place	ditto

MacDonald, A R	Assistant, Burn & Co, Ld	12, Mission Row	ditto
MacDonald, P S	Assistant, Thomas Duff & Co, Ld	3, Clive Row	ditto
MacGillivray, Allistair	Assistant Accountant, National Bank of India, Ld	104, Clive Street	ditto
MacEwan, Walter Thompson	Assistant, Sinclair Murray & Co, Ld	6, Royal Exchange Place	ditto
MacGregor, George Gordon	Director, Davenport & Co, Ld	6, Church Lane	ditto
MacGregor, Gray J	Sub-Manager, Lloyds Bank, Ld	101-1, Clive Street	ditto
MacGregor, H D	Manager (Insurance), Graham's Trading Co (India), Ld	6, Lyons Range	ditto
MacGregor, James Malcolm Carmichael	Manager, Allahabad Bank, Ld	6, Royal Exchange Place	ditto
MacGregor, John Cameron	Manager, Jewell Export Filter Co	10, Clive Street	ditto
MacInnes, R G	Assistant, Place, Siddons & Gough	6, Lyons Range	ditto
Mackay, Cardew Frank, BA, ACA	Accountant, Martin & Co	12, Mission Row	ditto
Mackay, Hugh George Gordon	Assistant, Begg, Dunlop & Co, Ld	2, Hare Street	ditto
Mackenzie, Alexander Neill	Director, Begg, Dunlop & Co, Ld	2, Hare Street	ditto
Mackenzie-Mair, James, BA (Oxon)	Manager, United Steel Co (India), Ld	2, Avenue House, Chowringhee Square	ditto
Mackey, Leslie Frank	Branch Manager, Pearl Assurance Co, Ld	8, Clive Street	ditto
MacKie, Edward Reed	Journalist, *Statesman*, Ld	Statesman House	ditto
MacKrell, Gyles	Assistant, Octavius Steel & Co, Ld	14, Old Court House Street	ditto
MacLaren, Malise Julian	Assistant, Allahabad Bank, Ld	6, Royal Exchange Place	ditto
MacLean, E V	Research Officer, C C M's Office, E I R	E I R House	ditto
Macleay, Roderick Campbell	Accountant, Burmah Shell Co of India, Ld	Hongkong House	ditto
Macmillan, Anthony St Claire, BA (Cantab).	Assistant, Martin & Co	12, Mission Row	ditto
Macmillan David Fald	Assistant, Andrew Yule & Co, Ld	8, Clive Row	ditto

No.	Names.	Style or calling.	Residence or place of business.	Religion.
	Macnab, Archibald Robert	Manager, Skefko Ball Bearing Co, Ld	11, Clive Street	Christian
	Macpherson, C M	Assistant, Octavius Steel & Co, Ld	14, Old Court House Street	ditto
	Macpherson, D H	Assistant, Place, Siddons & Gough	6, Lyons Range	ditto
	Macpherson, Ian Alastair	Asstt Commercial Manager, C E S C, Ld	Victoria House	ditto
	Maddison, B	Director, Henry Maddison, Ld	Mercantile Buildings	ditto
	Maddison, E	Director, Henry Maddison, Ld	Mercantile Buildings	ditto
	Maddison, E M	Director, Henry Maddison, Ld	Mercantile Buildings	ditto
	Maddison, H	Director, Henry Maddison, Ld	Mercantile Buildings	ditto
	Maguire, Colin Arthur	Chief Engineer (Elec), British Insulated Cables, Ld	2, Waterloo Street	ditto
	Mair, J G	Deputy Chief Accountant, Port Commissioners' Office	Strand Road	ditto
	Maitland, Frank	Director, Andrew, Yule & Co, Ld	8, Clive Row	ditto
	Malcolm, E W G	Sub-Manager, Mercantile Bank of India, Ld	8, Clive Street	ditto
	Malcolm, Robert Conacher	Assistant Superintendent (M I O), Survey of India	15, Wood Street	ditto
	Males, Arthur Joseph	Assistant, Prudential Assurance Co, Ld	Clive Buildings	ditto
	Maliphant, George Stephen, BSc	Engineer, Martin & Co	12, Mission Row	ditto
	Mallett, A B	Partner, Mackinnon, Mackenzie & Co	16, Strand Road	ditto
	Mallett, G R L	Executive Engineer (Headquarters), E B R	3, Koilaghat Street	ditto
	Malley, John	Manager, The Mirrlees Watson Co, Ld	28, Grosvenor House	ditto
	Mallock, Brian Esmond, BA	Assistant, Gillanders, Arbuthnot & Co	8, Clive Street	ditto
	Maloney, J C	Assistant, Grahams Trading Co (India), Ld	6, Lyons Range	ditto
	Manasseh, Alexander	Resident	Suite 14, Palace Court, Kyd Street	ditto

Manasseh, Allen S	Partner, S Manasseh & Sons	D-5, Clive Buildings		ditto
Manasseh, Aslan	Director, Moran & Co, Ld	4, Lyons Range		ditto
Marchant, H V	Electrical Assistant Engineer, Western (Electrical) Division	Writers' Buildings		ditto
Marquis, Geoffray Charles	Partner, Blacker & Co	2, Clive Street		ditto
Marshall, Henry	Architect	1, Rawdon Street		ditto
Marshall, Robert Trusdale	General Manager, G F Playfair & Co	27-7, Waterloo Street		ditto
Martin, Albert Edwin	Advtg Manager, Imperial Tobacco Co of India, Ld	37, Chowringhee		ditto
Martin, F G S	Controller of Stores, E I R	E I R House		ditto
Martin, Gerald Ulrick, BA	Chief Clerk, C O P S Office, E I R	E I R House		ditto
Martin, T A	Assistant, Martin & Co	12, Mission Row		ditto
Martin, T L	Partner, Martin & Co	12, Mission Row		ditto
Maslem, Sydney John	Assistant, Prudential Assurance Co, Ld	Clive Buildings		ditto
Massy, Ereic Fitzgerald Francis	Assistant, W S Cresswell & Co	3, Clive Row		ditto
Matheson, C C	Assistant, Jessop & Co, Ld	93, Clive Street		ditto
Mathieson, T E	Assistant, Bengal Chamber of Commerce	2, Clive Street		ditto
Matthews, Bernard, FRI, BA	Partner, Ballardie, Thompson & Matthews	7, Old Court House Street		ditto
Matthews, Frank de C	Accountant, The National City Bank of New York	4, Clive Street		ditto
May, Albert J	Manager, Linotype and Machinery Ld	21, Bowbazar Street		ditto
May, George Egerton	Mains Engineer, C E S C, Ld	Victoria House		ditto
May, N E	Engineer, Ingersoll Rand (India), Ld	15, Clive Street		ditto
May, Wilfred	Director, Moran & Co, Ld	4, Lyons Range		ditto
Maystre, George Lowndes	Testing Superintendent, C E S C,	Victoria House		ditto

Names.	Style or calling.	Residence or place of business.	Religion.
McBride, J B	Chief Inspector of Factories, Bengal	40-1A, Free School Street	Christian
McCann, N M	Partner, Perman & Hynd	9, Clive Street	ditto
McClelland, Dalton F	Associate General Secretary, National Council, Y M C A	5, Russel Street	ditto
McDonald, Hector	Director, Alfred Herbert (India), Ld	13-3, Strand Road	ditto
McDonald, Thomas	Manager, Standard Vacuum Oil Co	6, Church Lane	ditto
McDougal, P	Sr. Executive Officer, I G N & Ry Co, Ld	4, Fairlie Place	ditto
McEwen, E. J	Manager, Remington Rand Inc	3, Council House Street	ditto
McFarlane, J	Secretary, Octavius, Steel & Co, Ld	14, Old Court House Street	ditto
McGhie, Adrian	Assistant Accountant, Imperial Tobacco Co of India, Ld	37, Chowringhee	ditto
McGillivray, D G	Director, Holmes, Wilson & Co, Ld	Norton Buildings	ditto
McGlashan, E G	Director, Asbestos & Belting Co, Ld	2, Clive Ghat Street	ditto
McGregor, A	Chief Accountant, Shaw, Wallace & Co	4, Bankshall Street	ditto
McGregor, W M	Controller of Stores, E B R	3, Kaylaghat Street	ditto
McHaffie, A N E	Assistant, Shaw, Wallace & Co	4, Bankshall Street	ditto
McInnes, M C	P A to Secretary and Treasurer, Imperial Bank of India	Strand Road	ditto
McInnes, William McMillan	Deputy Assistant Manager, T E Thomson & Co, Ld	9, Esplanade East	ditto
McIntosh, Donald John Fishe	Chief Assistant, British Insulated Cables, Ld	2, Waterloo Street	ditto
McIntyre, John Francis Finch	Assistant, Gillanders, Arbuthnot & Co	8, Clive Street	ditto
McIntyre, William	Assistant, Macneill & Co	2, Fairlie Place	ditto
McIvor, D	Partner, Bright & McIvor	16, Chowringhee Road	ditto
Mckie, A G	Superintendent, I G N & Ry Co, Ld	4, Fairlie Place	ditto

McLaren, Alexander	Assistant, Duncan Bros & Co, Ld	101, Clive Street	ditto
McLatchie, A L	Director, Balmer, Lawrie & Co, Ld	103, Clive Street	ditto
McLean, G C	Managing Director, Roberts McLean & Co, Ld	101, Clive Street	ditto
McLean, William Adam Gardner	Director, Geo Miller & Co, Ld	7, Hastings Street	ditto
McLeod, Robert Harper	Assistant Manager, New Zealand Insurance Co, Ld	26, Dalhousie Square	ditto
McMinn, Alexander Cunningham	Acting Agent, The Central Agency, Ld	2, Old Court House Corner	ditto
McPherson, James	Assistant, Begg Dunlop & Co, Ld	2, Hare Street	ditto
Meadows, George Percy	Secretary, Royal Insurance Co, Ld	26 and 27, Dalhousie Square	ditto
Meakins, H W	Dy Traffic Manager, E B R	3, Koilaghat Street	ditto
Mealing, Kenneth William	Director, Andrew Yule & Co, Ld	8, Clive Row	ditto
Mellalieu, John Morton	Chief Accountant, Marshall Sons & Co (India), Ld	99, Clive Street	ditto
Mellis, A R	Director, Balmer, Lawrie & Co, Ld	103, Clive Street	ditto
Mellor, Robert Wood	Assistant, F W Heilgers & Co	1-1, Clive Street	ditto
Melville, Alexander Davie	Assistant, Bird & Co	1-1, Clive Street	ditto
Menhinick, E N	General Manager, Eastern Federal Union Insurance Co, Ld	9, Clive Street	ditto
Menzies, I D	Accountant, The P & O Banking Corporation, Ld	1, Fairlie Place	ditto
Menzies, Robert	Partner, Jardine Menzies & Co	14, Hare Street	ditto
Metaxa, Alexander	Assistant, Ralli Bros, Ld	16, Hare Street	ditto
Metcalfe T A	Tea Taster, Octavius Steel & Co, Ld	14, Old Court House Street	ditto
Methold, J H	Assistant, J Thomas & Co	8 Mission Row	ditto
Meudell, Edgar	General Manager and Secretary, A Milton & Co, Ld	156, Dharamtala Street	ditto
Meyer, Patrick Maurice Rose	Dy Chief Auditor, E B R	19, Theatre Road	ditto
Michael, J D	Secretary to Agent, E I R	E I R House	ditto

No.	Names.	Style or calling.	Residence or place of business.	Religion.
	Middleton, Frank Leslie	Assistant, North British & Mercantile Insurance Co, Ld	101-1, Clive Street	Christian
	Middleton, Percival Harold	Assistant, Mackenzie Lyall & Co	5, Mission Row	ditto
	Mehigion, Simon	Headmaster, Armenian College and Philanthropic Academy	39, Free School Street	ditto
	Mildren, R P	Sub-Agent, Chartered Bank of India, Australia and China	1-1, Clive Street	ditto
	Miles, C W	Assistant, Shaw Wallace & Co	4, Bankshall Street	ditto
	Miles, E A	Partner, Thos Seth Apcar & Co	8, Clive Street	ditto
	Miles, Phillip Purpoint	Mains Engineer, C E S C, Ld	Victoria House	ditto
	Millar, A	Accdt. Superintendent, Scottish Union and National Insurance Co	6, Lyons Range	ditto
	Millar, G A	Director, Winter Bros	Mercantile Buildings	ditto
	Millar, L G	Accountant, Octavius Steel & Co, Ld	14, Old Court House Street	ditto
	Miller, John	Director, Moran & Co, Ld	4, Lyons Range	ditto
	Miller, Samuel de Burgh	Director, Andrew Yule & Co, Ld	8, Clive Row	ditto
	Miller, William George	Director, Geo Miller & Co, Ld	7, Hastings Street	ditto
	Mills, Henry	Assistant, Hoare Miller & Co, Ld	5, Fairlie Place	ditto
	Mills, Lionel	Jt Manager, Nestle & Anglo-Swiss Condensed Milk (Export) Co, Ld.	9A, Clive Street	ditto
	Milne, Eric Oswald	Partner, Sinclair & Co	5, Commercial Buildings	ditto
	Milne-Robertson, C E L	Director, Turner Morrison & Co, Ld	6, Lyons Range	ditto
	Milton, Morgan Busson	Managing Director, A Milton & Co, Ld	156, Dharamtala Street	ditto
	Minto, James A	Assistant, Kilburn & Co	4, Fairlie Place	ditto
	Mitchell, A H	Assistant, Jessop & Co, Ld	93, Clive Street	ditto
	Mitchell, Allan Stephen	Actg Br Manager, Union Insurance Society of Canton, Ld	8, Clive Street	ditto
	Mitchell, David	Partner, Lovelock & Lewes	4, Lyons Range	ditto

Mitchell, Edgar John	Director, Harman & Co, Ld	11, Government Place	ditto
Mitchell, Ernest David	Managing Director, Alfred Herbert (India), Ld	13-3, Strand Road	ditto
Mitchell, Thomas Watson	Partner, King Bros	102, Clive Street	ditto
Moncur, W B	Assistant, Andrew Yule & Co, Ld	8, Clive Row	ditto
Montgomery, A T	Accountant, Balmer Lawrie & Co, Ld	103, Clive Street	ditto
Montrose, C A	Office Superintendent, C M O's Office, E I R	E I R House	ditto
Moodie, Alan Ewan Stewart	Assistant Accountant, National Bank of India, Ld	104, Clive Street	ditto
Moodie, Oliver Steuart	Partner, King Bros	102, Clive Street	ditto
Moon, Geo Crammond	Director, Sinclair Murray & Co, Ld	6, Royal Exchange Place	ditto
Moon, Thomas James	Governing Director, Morrison & Cottle, Ld	30C, Chowringhee	ditto
Moore, C S	District Transportation Officer, B N R	2, Pretoria Street	ditto
Moore, Ernest Arthur	Executive Engineer, Dredger Division. P W D	3, Charnock Place	ditto
Moore, William Arthur	Director and Editor, *Statesman*, Ld	Statesman House	ditto
Mordecai, I E	Proprietor, David & Son	6, Short Street	Jew
Mordue, Leslie Howard	Assistant Manager (Litho), Surveyor-General's Office	14, Wood Street	Christian
Morgan, I	Assistant, Balmer, Lawrie & Co, Ld	103, Clive Street	ditto
Morrison, R M	Partner, Innes Watson & Co	15, Clive Row	ditto
Morshead, J	Constituted Attorney, Turner Morrison & Co, Ld	6, Lyons Range	ditto
Morten, H, ARCI, BSC (Lond)	Assistant, Imperial Chemical Industries (India), Ld	18, Strand Road	ditto
Morton, George Bond	Partner, Bird & Co	1-1, Clive Street	ditto
Morton, Percy William	Branch Manager, Chloride Electrical Storage Co, Ld	4, Lyons Range	ditto
Mousell, L C	Ma aging Director, Mousell & Co, L	Mercantile Buildings	ditto

No.	Names.	Style or calling.	Residence or place of business.	Religion.
	Mowat, Arthur, MA	Professor, Scottish Church College	4, Cornwallis Square	Christian
	Muir, A W	Accountant, Heatly & Gresham, Ld	6, Waterloo Street	ditto
	Muirden, A C	Branch Manager, G D Peters (India), Ld	10, Clive Street	ditto
	Mulroney, C	Manager, J O'Hara Murray & Co (India)	100, Clive Street	ditto
	Mundy, C Vyvian	General Manager, The Indian and Eastern Engineering Co, Ld	5, Mission Row	ditto
	Munro, I F M	Manager, Associated Press of India	7, Hare Street	ditto
	Murdoch, W	Secretary, Haji Ismail Sait & Sons, Ld	13, Park Street	ditto
	Murphy, Allan Francis	Extra Assistant Superintendent (Drawing), Survey of India	13, Wood Street	ditto
	Murray C	Cal Representative, Siemens Brothers & Co, Ld	8, Clive Street	ditto
	Murray, G K	Assistant, F W Heilgers & Co	1-1, Clive Street	ditto
	Murray, J A	Proprietor, James Murray & Co	5, Old Court House Street	ditto
	Murray, J O'Hara, MI, Mech	Proprietor, J O'Hara Murray & Co	100, Clive Street	ditto
	Murray, Victor William	Partner, Blacker & Co	2, Clive Street	ditto
	N			
	Nagle, J N E	Research Officer, E B R	3, Koilaghat Street	Christian
	Namey, J	Superintendent, Government Shipping Office	15-1, Strand Road	ditto
	Natesan, L A, MA	Professor, Scottish Church College	4, Cornwallis Square	ditto
	Nawe, S J	Director, Ivan Jones, Ld	8, Dalhousie Square, East	ditto
	Neale, G H	Director, W Newman & Co, Ld	3, Old Court House Street	ditto
	Nelson, F O Bond, BS	Secretary and Director, Ingersoll-Rand (India), Ld	15, Clive Street	ditto
	Nethersole, John (Major)	Clerk of the Course, Royal Calcutta Turf Club	11, Russell Street	ditto

Newbery, C A	Principal, Armenian College	39, Free School Street	ditto
Newman, S C, ACA	Accountant, Howrah Iron Works (Martin & Co)	12, Mission Row	ditto
Newsum, N R	Manager, The Eastern Bank, Ld	9, Clive Street	ditto
Nicholl, C K	Director, Octavius, Steel & Co, Ld	14, Old Court House Street	ditto
Nicholls, Ernest James	Partner, Williamson, Magor & Co	4, Mangoe Lane	ditto
Nicholson, A R	Proprietor, British Refrigerators	30-A, Chowringhee	ditto
Nicoll, John Lynn	Assistant, Gillanders, Arbuthnot & Co	8, Clive Street	ditto
Nicoll, William John	Engineer, Burmah Shell Co of India, Ld	Hongkong House	ditto
Nicolson, K J	Partner, Gladstone, Wyllie & Co	4, Fairlie Place	ditto
Nimmo, Thomas Bryce	Director, Duncan Brothers & Co, Ld	101, Clive Street	ditto
Nissim, E	Managing Director, E Meyer & Co (1926), Ld	2, Clive Ghat Street	Jew
Niven, J C	Director, D Millar & Co, Ld	28, Dalhousie Square, West	Christian
Nolan, B E	Engineer, McGregor & Balfour, Ld	11, Clive Street	ditto
Norcock, C V L (Commdr)	Dy Conservator, Port Commissioners' Office	Strand Road	ditto
Norman, Wm James (Major), MC RE	In charge Photo Litho, Survey of India	14, Wood Street	ditto
North, B	Executive Engineer, Western Electrical Division	Writers' Buildings	ditto
Norton, H R	Director, Hall & Anderson, Ld	31, Chowringhee	ditto
Notley, L G	Partner, A W Figgis & Co	Clive Buildings	ditto
Nougerede, F A De la	District Controller of Stores, E B R	3, Kaylaghat Street	ditto

O

O'brien, Amos, MA	Master, St Xavier's College	30, Park Street	Christian
O'brien, Ernest Clarence	Manager, George, Waller & Co	29, Dalhousie Square	ditto

No.	Names.	Style or calling.	Residence or place of business.	Religion.
	O'Connor, H A	General Manager, United Artists Corporation of (New York)	Tower House	Christian
	Officer, Adam Smart	Assistant, F W Heilgers & Co	1-1, Clive Street	,ditto
	Ogden, Frederick, Charles Dickerson	Manager, Lloyds Bank, Ld	37, Chowringhee	ditto
	Ogg, J A	Assistant, Kettlewell, Bullen & Co, Ld	21, Strand Road	ditto
	Oldrini, Basil Claude John	Branch Manager, Govan Bros, Ld	20, Park Street	ditto
	Oliver, Richard John	Assistant, Martin & Co	12, Mission Row	ditto
	Orange, William John	General Manager, English Elec Co, Ld	D4, Clive Buildings	ditto
	Ord, Thomas	Partner, Macneill & Co	2, Fairlie Place	ditto
	Ordish, J E	Director, George, Henderson & Co, Ld	101-1, Clive Street	ditto
	Ormiston, Jose Forbes	Assistant, North British & Mercantile Insurance Co, Ld	101-1, Clive Street	ditto
	Ormond, John Evelyn	Partner, Normans, Ross & Co	3, Clive Street	ditto
	Orr, James	Partner, Lovelock & Lewes	4, Lyons Range	ditto
	Orr, N J R	Assistant, Mackinnon, Mackenzie & Co	16, Strand Road	ditto
	Ortner, Charles	Assistant, Hamilton & Co, Ld	8, Old Court House Street	ditto
	Ottignon, William Alexander	Assistant, Volkart Brothers	11, Clive Street	ditto
	Owen, Clive William	Manager, Britannia Batteries, Ld	Bharat Bhavan, Chittaranjan Avenue	ditto
	Owers, Bernard Charles	Director, Sinclair, Murray & Co, Ld	6, Royal Exchange Place	ditto
	Oxley, Edward	Surveyor, Lloyd's Register of Shipping	29, Dalhousie Square	ditto
	P			
	Padgett, George Arnold	Assistant, Blackwood, Bryson & Co, Ld	2, Mangoe Lane	Christian
	Page, Eric Howard	Chartered Accountant, Begg, Dunlop & Co, Ld	2, Hare Street	ditto

Page, John Archibald, BA (Cantab)	Representative, Fairbairn, Lawson, Combe, Barbour, Ld	8, Clive Street	dit to
Palmer, Charles Percy Scott	Manager, Kodak, Ld	17, Park Street	ditto
Palmer, H W	Manager, Sales, Lipton, Ld	9, Weston Street	ditto
Pape, Harold Randleson (Lt-Col)	Stipendiary Steward, Royal Calcutta Turf Club	11, Russell Street	ditto
Park, Collin Brown	Assistant, Macneill & Co	2, Fairlie Place	ditto
Park, Ernest Reginald	General Manager, I R G P & T W Co, Ld	7, Old Court House Street	ditto
Parks, J A	Deputy Valuer, Calcutta Improvement Trust	5, Clive Street	ditto
Parker, H N	Deputy Agent, Personnel, E B R	3, Koilaghat Street	ditto
Parker, T	Director, Imperial Chemical Industries (India), Ld	18, Strand Road	ditto
Parker, W T C	Joint Manager, Lloyds Bank, Ld	101-1, Clive Street	ditto
Parkhurst, C A	Manager, Macmillan & Co, Ld	294, Bowbazar Street	ditto
Parkinson, Ernest	Manager, R B Rodda & Co	2, Wellesley Place	ditto
Parkinson, J	Chief Engineer, C E S C, Ld	Victoria House	ditto
Parr, J F	Superintendent, Thacker's Press & Directories, Ld	3, Esplanade East	ditto
Parsons, Patrick John	Director, The Britannia Biscuit Co, Ld	5, Dalhousie Square	ditto
Paterson, A	Manager, H H Robertson & Co	4, Lyons Range	ditto
Paterson, C S	General Secretary, Y M C A	25, Chowringhee	ditto
Paterson, E A	Assistant, Jardine, Skinner & Co	4, Clive Row	ditto
Paterson, Robert Sinclair	Power Sales Engineer, C E S C, Ld	Victoria House	ditto
Paterson, R W Weir	Partner, Jardine, Skinner & Co	4, Clive Row	ditto
Paton, Andrew	Accountant, National Bank of India, Ld	104, Clive Street	ditto
Paul, Gerard Henry	Partner, Piggott, Chapman & Co	6, Lyons Range	ditto

No.	Names.	Style or calling	Residence or place of business.	Religion.
	Pawsey, E L (Lt Comdr)	2nd Assistant Conservator, Port Commissioners' Office	Strand Road	Christian
	Paxton, D S, MIEE	Manager, Daniel, Adamson & Co, Ld	5, Dalhousie Square	ditto
	Paxton, Ralph Ernest	Manufacturers Representative	10, Lall Bazar	ditto
	Pearce, C	Dy Agent (Organization), E I R	E I R House	ditto
	Pearce, Harry Felix, BA (Cantab)	Engineer, Callender's Cable & Construction Co, Ld	2, Pollock Street	ditto
	Pecker, C B	Genl Manager, T E Thomson & Co, Ld	9, Esplanade East	ditto
	Peddie, K	Dy Chief Engineer, E I R	E I R House	ditto
	Peebles, George	Assistant, Andrew Yule & Co, Ld	8, Clive Row	ditto
	Penberthy, W F	Managing Director, D Gestetner (India), Ld	Grosvenor House	ditto
	Penn, C E	Sales Manager, G E C (India), Ld	Magnet House, Chittaranjan Avenue (South)	ditto
	Penn, Geo O	Managing Director, George O Penn (India), Ld	22, Chowringhee	ditto
	Pennell, Vincent Edward	Assistant, Royal Insurance Co, Ld	26 & 27, Dalhousie Square	ditto
	Pepper, W R	Agent, Calcutta Tramways Co, Ld	7, Church Lane	ditto
	Peppercorn, Wm Haydon, BA (Cantab)	Asstt Manager, Burmah Shell Co of India, Ld	Hongkong House	ditto
	Perrin, Frank Hubert	Manager, New Zealand Insurance Co, Ld	26, Dalhousie Square	ditto
	Perry, B	Assistant Supdt, Bengal Chamber of Commerce	2, Clive Street	ditto
	Perry, John Raymond	Manager, J H Fenner & Co, Ld	Mercantile Buildings	ditto
	Perry, Thomas Charles	Mains Engineer, C E S C, Ld	Victoria House	ditto
	Peskett, Blanchard	Surveyor to Lloyds Register of Shipping	29, Dalhousie Square	ditto
	Peters, E C	Assistant, Andrew Yule & Co, Ld	8, Clive Row	ditto
	Petre, Bernard Francis	Partner, Martin & Co	12, Mission Row	ditto

Philips, G T	Branch Manager, Manufacturers Life Insurance Co	27, Dalhousie Square	ditto
Pickering, F A	Sub-Accountant, The Eastern Bank, Ld	9, Clive Street	ditto
Pilcher, Frank Hubert	Accountant, W T Henley's Telegraph Works Co, Ld	Old Court House Corner	ditto
Pirrie, John Hamilton	Assistant Accountant, National Bank of India, Ld	104, Clive Street	ditto
Plummer, R W	Partner, Plummer Bros & Co	5 & 6, Fancy Lane	ditto
Plummer, W R W	Partner, Plummer Bros & Co	5 & 6, Fancy Lane	ditto
Plumstead, Eric William	Branch Manager, Cox & Kings (Insurance), Ld	5, Bankshall Street	ditto
Pollett, John Charles St Clair, VD	Extra Assistant Superintendent (Drawing), Survey of India	13, Wood Street	ditto
Pool, William Stark	Assistant Manager, American Express Co, Inc	14, Govt. Place, East	ditto
Poole, Sidney Albert	Engineer, Alfred Herbert (India), Ld	13-3, Strand Road	ditto
Porter, S H	Partner, Breakwell & Co	44, Free School Street	ditto
Potter, George Edward	Accountant, Butterworth & Co (India), Ld	Chowringhee Square	ditto
Potts, Frank	Main's Engineer, C E S C, Ld	Victoria House	ditto
Powell, H O	Resident Secretary, Manufacturers Life Insurance Co	27, Dalhousie Square	ditto
Pratt, Charles Harry	Director, Hamilton & Co, Ld	8, Old Court House Street	ditto
Pratt, E B	Chairman and Managing Director, Imperial Chemical Industries (India), Ld	18, Strand Road	ditto
Pratt, Edwin Basil	Assistant Manager, Army & Navy Co-operative Society, Ld	41, Chowringhee	ditto
Preston, E B C	Chief Engineer, G E C (India), Ld	Magnet House, Central Avenue, South.	ditto
Preston, E. Frank	Assistant, Balmer, Lawrie & Co, Ld	103, Clive Street	ditto
Preston, Thomas Henry	Accountant, W Newman & Co, Ld	3, Old Court House Street	ditto
Price, Cormell Edward William	Partner, Normans, Ross & Co	3, Clive Street	ditto
Price, H C	Assistant, Balmer, Lawrie & Co, Ld	103, Clive Street	ditto

No.	Names.	Style or calling.	Residence or place of business.	Religion.
	Price, K J D	Mg Director, The Muir Mills Co, Ld	25, Chowringhee	Christian
	Price, Leslie	Mains Engineer, C E S C, Ld	Victoria House	ditto
	Price, Walter Lumsden	Coml Manager, C E S C, Ld	Victoria House	ditto
	Price, William Edward	Manager, North British & Mercantile Insurance Co, Ld	101-1, Clive Street	ditto
	Prike, Frederic Barton	Partner, R B Rodda & Co	2, Wellesley Place	ditto
	Pugh, David Gwilliam	Assistant Commercial Manager, C E S C, Ld	Victoria House	ditto
	Pulley, Albert Edward	Manager, Worthington-Simpson, Ld	10, Clive Street	ditto
	Purcell, E M	Office Superintendent, C C M's Office, E I R	E I R House	ditto
	Pushong, Oscar Newman	Officer in charge, Map Record & Issue Office, Survey of India	13, Wood Street	ditto
	Pye, J M	Joint Controller, Indian Tea Licensing Committee, Bengal Chamber of Commerce.	2, Clive Street	ditto
	Q			
	Quartly, F J	Manager, Calcutta & Eastern Trading Co	Grosvenor House	Christian
	Quirke, John Patrick Francis	Assistant, Place, Siddons & Gough	6, Lyons Range	ditto
	R			
	Radford, Thomas Henry	Assistant Controller of Inspection, Indian Stores Department	6, Esplanade, East	Christian
	Radice, L W	Manager, Butterworth & Co (India), Ld	Avenue House	ditto
	Rainey, Geoffrey Allan	Assistant, Balmer, Lawrie & Co	103, Clive Street	ditto
	Ramsay, A R	Assistant, Shaw, Wallace & Co	4, Bankshall Street	ditto
	Ratcliffe, R H	Managing, Director, C Lazarus & Co	11, Stephen Court	ditto
	Read, Frank Joseph	Director, Hamilton & Co, Ld	8, Old Court House Street	ditto
	Read, George Crible	Chartered Accountant, George, Read & Co	Avenue House, Chowringhee Square	ditto
	Reece, H S	Proprietor, G F Playfair & Co	27-7, Waterloo Street	ditto

Reed, J C	Secretary, Associated Electrical Industries (India), Ld	8, Clive Street	ditto
Reed, J K S, MA	Professor, Scottish Church College	4, Cornwallis Square	ditto
Reed, John Cameron	Asstt Manager, Burmah Shell Co of India, Ld	Hongkong House	ditto
Rees, Edward Owen	General Manager, Minimax, Ld	Mercantile Buildings	ditto
Reeve, Henry Charles	Assistant, Accounting Department, Imperial Tobacco Co of India, Ld	37, Chowringhee	ditto
Reid, James	Proprietor, Llewelyn & Co	9-1, Waterloo Street	ditto
Remfry, Douglas H, BE	Partner, Remfry & Son	Stephen House	ditto
Remfry, W E Arnold	2nd grade assistant, Imperial Bank of India	Strand Road	ditto
Rennie, John Stevenson	Director, Cobbold & Co, Ld	Norton Buildings	ditto
Richardson, Bernard Ian	Assistant, Anderson, Wright & Co	22, Strand Road	ditto
Richardson, F	Engineer, Lipton, Ld	9, Weston Street	ditto
Richardson, John Henry Swain	Managing Director, Andrew, Yule & Co, Ld	8, Clive Row	ditto
Riches, Alexander	Assistant, Lipton Ld	9, Weston Street	ditto
Richmond, H W	Director, Brooke Bond (India), Ld	2, Metcalfe Street	ditto
Rivaz, Charles Warwick	Contract Manager, Bengal Telephone Corporation, Ld	8, Hare Street	ditto
Roberts, Frederick Graham, ACA	Partner, Graham Roberts & Co	5, Fairlie Place	ditto
Roberts, Horace Robert	Assistant, Royal Exchange Assurance	1 & 2, Old Court House Corner	ditto
Robertson, Andrew Cathro	Partner, Landale & Morgan	3, Fairlie Place	ditto
Robertson, Ewart Gladstone	Partner, Pigott, Chapman & Co	6, Lyons Range	ditto
Robertson, G S	P A to Chief Engineer, E I R	E I R House	ditto
Robertson, J G D	Assistant, Morgan Walker & Co	2, Clive Ghat Street	ditto

No.	Names.	Style or calling	Residence or place of business.	Religion.
	Robertson, M	Dy Agent (Penl), E I R,	E I R House	Christian
	Robey, P E	Engineer, K Ray & Brothers	6, Hastings Street	ditto
	Robinson, Cedric Arthur Betham	Assistant, Planters' Stores & Agency Co, Ld	11, Clive Street	ditto
	Robinson, J	Director, Maitland Craig, Ld	E-2, Clive Buildings	ditto
	Robson, M G	Constituted Attorney, Turner Morrison & Co, Ld	6, Lyons Range	ditto
	Rodda, H N	Works Manager, Stephens & Co, Ld	33, Bow Bazar Street	ditto
	Roddick, C I	Director, Jessop & Co, Ld	93, Clive Street	ditto
	Roger, A	Assistant, Bird & Co	1-1, Clive Street	ditto
	Rogers, Cornelius William	Assistant Engineer, Bengal Telephone Corporation, Ld	8, Hare Street	ditto
	Rogers, Sydney Walter	Assistant Accountant, National Bank of India, Ld	104, Clive Street	ditto
	Rooney, Frederick	Secretary, Bengal Telephone Corporation, Ld	8, Hare Street	ditto
	Rose, George	Inspector of Branches, Allahabad Bank, Ld	6, Royal Exchange Place	ditto
	Rose, John Charles	Deputy Chief Commercial Manager, E I R	E I R House	ditto
	Ross, J B	Sr Assistant, Shaw Wallace & Co	4, Bankshall Street	ditto
	Ross, James William	Managing Director, Walford Transport, Ld	71-73, Park Street	ditto
	Ross, W N	Sub-Accountant, The Eastern Bank, Ld	9, Clive Street	ditto
	Rossetti, F F, BSc	Secretary, Y M C A (Chowringhee Branch)	25, Chowringhee	ditto
	Rostron, Arthur Henry Cunliffe	Manager for India, Mulcott Belting Co, Ld	10, Government Place, East	ditto
	Rothera, George Howitt	Partner, Martin & Co	12, Mission Row	ditto
	Rouston, J W	Director, Jessop & Co, Ld	93, Clive Street	ditto

Routledge, J	Superintending Engineer, Andrew Weir & Co	9, Clive Street	ditto
Rowe, Charles	Mains Engineer, C E S C, Ld	Victoria House	ditto
Rowe, E H	2nd Grade Assistant, Imperial Bank of India	Strand Road	ditto
Rowley, J R	Chief Engineer, Port Commissioners' Office	Strand Road	ditto
Roy, Oswald James, BA	Assistant, Williamson, Magor & Co	4, Mangoe Lane	ditto
Rusbridge, Ernest Charles	Secretary, J C Duffus & Co, Ld	5, Fairlie Place	ditto
Rusmussen, Frank John	Assistant, New Zealand Insurance Co, Ld	26, Dalhousie Square	ditto
Russel, F D	Manager, Dorman Long & Co, Ld	8, Clive Street	ditto
Russell, G D	Assistant, Kilburn & Co	4, Fairlie Place	ditto
Russell, H W	Constituted Attorney, Standard Vacuum Oil Co	6, Church Lane	ditto
Russell, James Smith Thompson	Assistant, James Finlay & Co, Ld	1, Clive Street	ditto
Ruthven, J L	Partner, Landale & Morgan	3, Fairlie Place	ditto
Ryan, Edward Patrick John	Secretary, Saturday Club, Ld	7, Wood Street	ditto
Ryan, T J	Asstt Comml Manager, C C M's Office, E I R	E I R House	ditto
Ryde, W S	Manager, P & O Banking Corporation, Ld	1, Fairlie Place	ditto

S

Salmond, H G	Dy Agent and Secretary, E B R	3, Kaylaghat Street	Christian
Sandys-Lumsdaine, Colin Cran	Assistant, Williamson, Magor & Co	4, Mangoe Lane	ditto
Sassoon, D D	Manager to David Ezra	59, Ezra Street	Jew
Sassoon, M A	Director, M A Sassoon & Sons, Ld	21, Old Court House Street	ditto
Sassoon, R M	Director, M A Sassoon & Sons, Ld	21, Old Court House Street	ditto

No.	Names.	Style or calling.	Residence or place of business.	Religion.
	Saxby, Herbert Baber	Managing Director, Scott & Saxby, Ld	19, British Indian Street	Christian
	Sayer, J A	Electrical Engineer, Octavius Steel & Co, Ld	14, Old Court House Street	ditto
	Sayres, E H	Assistant, Carritt Moran & Co	9, Mission Row	ditto
	Scatcherd, James Frederick	Assistant, J B Norton & Sons, Ld	Norton Buildings	ditto
	Scobie, A (Capt)	Marine Superintendent, Andrew Weir & Co	9, Clive Street	ditto
	Scotson, Robert	Assistant, Anderson, Wright & Co	22, Strand Road	ditto
	Scott, A E	Assistant, Turner, Morrison & Co, Ld	6, Lyons Range	ditto
	Scott, G C	Director, Scott & Saxby Ld	19, British Indian Street	ditto
	Scott, H P	Assistant, Shaw, Wallace & Co	4, Bankshall Street	ditto
	Scott, I B W	Assistant, Mackinnon Mackenzie & Co	16, Strand Road	ditto
	Scott, J O	Partner, Perman & Hynd	9, Clive Street	ditto
	Scott, John	Director, Andrew Yule & Co, Ld	8, Clive Row	ditto
	Scott, John Rivers	Asstt Manager, Valvoline Oil Co	8, Clive Street	ditto
	Scott-Kerr, W F	Director, George Henderson & Co, Ld	101-1, Clive Street	ditto
	Scroggie, Thomas Willock	Manager, Scroggie Brothers	2, Clive Ghat Street	ditto
	Seager, F Carl	Manager, The Ocean Accident and Guarantee Corporation, Ld	32-1, Dalhousie Square	ditto
	Sealy, Henry Euston	Assistant to District Manager, Lloyds Bank, Ld	101-1, Clive Street	ditto
	Searle, Stephen	Assistant Accountant, National Bank of India, Ld	104, Clive Street	ditto
	Sevastopulo, Demetrius George	Assistant, Ralli Bros, Ld	16, Hare Street	ditto
	Shailer, T F C	Manager, May & Baker (India) Ld	11, Clive Street	ditto

Sharpe, John Charles (Capt)	Office Superintendent, Martin & Co	12, Mission Row	ditto
Sharpe, Leslie Howard	Manager, Planters' Stores and Agency Co, Ld	11, Clive Street	ditto
Sharpe, Percival Andrew	Director, Great Eastern Exchange, Ld	29, Park Street	ditto
Shaw, A A	Assistant, J Thomas & Co	8, Mission Row	ditto
Shaw, F	Erection Superintendent, A Reyrolle & Co, Ld	12, Mission Row	ditto
Shaw, W	Secretary, Aluminium Manufacturing Co, Ld	9, Clive Street	ditto
Shearer, Allan Struthers	Partner, Mackenzie, Lyall & Co	5, Mission Row	ditto
Shedden, Hamilton	Partner, Macneil & Co	2, Fairlie Place	ditto
Shelley, Rowland Douglas	Resident Engineer, Belliss & Morcom, Ld	C6, Clive Buildings	ditto
Sherman, H M	Partner, W Haworth & Co	1, Commercial Buildings	ditto
Sherman, J R S (Capt)	Dy Superintendent, I G N & Ry Co, Ld	4, Fairlie Place	ditto
Shircore, M H	Assistant, Turner, Morrison & Co, Ld	6, Lyons Range	ditto
Shrosbree, A de Bois	Managing Director, Talbot & Co	Tower House, Chowringhee Square	ditto
Shuttleworth, Edward Hugh	Partner, Normans Ross & Co	3, Clive Street	ditto
Siddons, S	Assistant, W H Targett & Co	1, Commercial Buildings	ditto
Siewart, John George	Assistant, Andrew Yule & Co, Ld	8, Clive Row	ditto
Sillar, K G	Sales Manager, C E S C, Ld	Victoria House	ditto
Silverwood, Herbert W AMIE	Assistant Engineer, (Inspection) Indian Stores Deptt	6, Esplanade, East	ditto
Sim, G A S	Assistant Andrew, Yule & Co, Ld	8, Clive Row	ditto
Simpson, James Herbert	Salesman, Kalamazoo. Ld	2 &3, Clive Row	ditto
Sinclair, D B	Assistant Manager, Union Insurance Society of Canton, Ld	8, Clive Street	ditto

No.	Names.	Style or calling.	Residence or place of business.	Religion.
	Sitwell, S S'H	Assistant, Jessop & Co, Ld	93, Clive Street	Christian
	Slater, A E	Manager, Herbert Son & Co (Cal.) Ld	Stephen House	ditto
	Sloan, Athol Galbraith, BA (Cantab.)	Assistant, Burmah Shell Co of India, Ld	Hongkong House	ditto
	Small, E V	Manager, Associated Electrical Industries (India), Ld	8, Clive Street	ditto
	Small, F W	Genl Manager, K Ray & Brothers	6, Hastings Street	ditto
	Smart, John Nelson	Assistant, Landale & Clark, Ld	11, Clive Street	ditto
	Smith, Adam John Laorie	Sub-Accountant, The Eastern Bank, Ld	9, Clive Street	ditto
	Smith, Allan	Secretary, Andrew, Yule & Co, Ld	8, Clive Row	ditto
	Smith, Balfour	Partner, Macneill & Co	2, Fairlie Place	ditto
	Smith, C D	Assistant, Lovelock & Lewes	4, Lyons Range	ditto
	Smith, Charles Jupp	Engineer, Burmah Shell Co of India, Ld	Hongkong House	ditto
	Smith, H	Secretary, Remfry & Son	Stephen House	ditto
	Smith, Harvey Oswald	Accountant, The Eastern Bank, Ld	9, Clive Street	ditto
	Smith, H F	Assistant, Bombay Co, Ld	19, British Indian Street	ditto
	Smith, H G	Manager, A & S Henry & Co, Ld	7, Grosvenor House	ditto
	Smith, J N	Representative, Fairbairn, Lawson. Combe, Barbour, Ld	8, Clive Street	ditto
	Smith, Reginald John	Assistant, Asbestos Cement, Ld	135, Canning Street	ditto
	Smith. R T	Secretary and Accountant, Steuart & Co, Ld	57, Park Street	ditto
	Smith, Stanley Charles	Branch Manager, Employers' Liability Assurance Corporation, Ld	9, Clive Street	ditto
	Smith, Stuart Gordon	Assistant, Northern Assurance Co, Ld	7, Hare Street	ditto

Smith, T J	Mg. Director, The Muir Mills Co, Ld	25, Chowringhee	ditto
Smith, Udney Vane	Partner, Johnston & Hoffman	10, Chowringhee	ditto
Smitheram, A E	Stores Superintendent, Andrew, Weir & Co	9, Clive Street	ditto
Smyth, G C G	Assistant Supdt, Bengal Chamber of Commerce	2, Clive Street	ditto
Smythe, Brian Keith Maddison	Manager, Thorne's, Ld	13, Ezra Mansions	ditto
Snaith, John Frank	Managing Director, Hamilton & Co, Ld	8, Old Court House Street	ditto
Sofer, Ellis	Assistant, Arnhold & Co, Ld	100, Clive Street	Jew
Solomon, Ernest J	Landholder	16, Theatre Road	ditto
Solomon, S E	Landholder	3, Moira Street	ditto
Sommerfeld, A	Managing Director, Mousell & Co, Ld	Mercantile Buildings	Christian
Soutar, William John	Managing Agent, Landale & Clark, Ld	11, Clive Street	ditto
Sowter, Cyril Woodbury	Accountant, Martin & Co	12, Mission Row	ditto
Spatz, Robert Felix Barnard	Resident Secretary, Liverpool, London & Globe Insurance Co, Ld	26, Dalhousie Square	ditto
Speller, John Henry	Engineer, Bengal Telephone Corpn, Ld	8, Hare Street	ditto
Spencer, Albert Pearson	Artist Engraver, Calcutta Mint	47, Strand Road	ditto
Spencer, Mortimer Joseph Campbell	Head Assistant, Bengal Secretariat, Marine Department	Writers' Buildings	ditto
Spooner, Charles Selwyn	Assistant, South British Insurance Co, Ld	5, Clive Street	ditto
Spooner, Edwin George	Assistant, Martin & Co	12, Mission Row	ditto
Sproat, S M	Director, Ingersoll, Rand (India), Ld	15, Clive Street	ditto
Squarey, D N P	Director, Turner, Morrison & Co, Ld	6, Lyons Range	ditto
Squire, E H H	Manager (Shipping), Grahams Trading Co Ld	6, Lyons Range	ditto

No.	Names.	Style or calling.	Residence or place of business.	Religion.
	Squire, L	Partner, A W Figgis & Co	8, Clive Street	Christian
	Stacey, E E	Ag Sub-Manager, National Bank of India, Ld	104, Clive Street	ditto
	Stanhope, H	Printing Superintendent, E I R	E I R House	ditto
	Stanton, Eric John Harrison	Assistant, James Finlay, & Co, Ld	1, Clive Street	ditto
	Stanton, T H	Wiggins, Teape & Alex Pirie (Export), Ld	6, Mangoe Lane	ditto
	Staples, Edward Henry	Partner, Stewart & Co	8, Clive Street	ditto
	Stapleton, F G	Engineer, William Jacks & Co	10, Clive Street	ditto
	Stapleton, John Rouse	Superintendent, Marconi International Marine Communication Co, Ld	5, Temple Chambers	ditto
	Stark, David Murray	Assistant, Macneill & Co	2, Fairlie Place	ditto
	Stark, J D	Assistant, Bird & Co	1-1, Clive Street	ditto
	Steer, W	Dy Traffic Manager, Port Commissioners	Strand Road	ditto
	Steerwood, H A	Sub-Manager Lloyds Bank, Ld	101-1, Clive Street	ditto
	Stein, J A AM, ICE	Superintending Engineer, Presidency Circle, P W D	Writers' Buildings	ditto
	Step, G E	Partner, J Mackillican & Co	21, Old Court House Street	ditto
	Stephen, G	Asstt Accountant, The P & O Banking Corpn, Ld	1, Fairlie Place	ditto
	Stephen, Robert George	Director, Standard Literature Co, Ld	13-1, Old Court House Street	ditto
	Stephens, J A	Assistant, Gladstone Wyllie. & Co	4, Fairlie Place	ditto
	Sterndale, Reginald Marcus	Agent, Imperial Bank of India	8, Clive Street	ditto
	Steuart, F C J	Partner, Jardine, Skinner & Co	4, Clive Row	ditto
	Stevens, Cecil Robert	Assistant, Ralli Bros, Ld	16, Hare Street	ditto

Stevenson, Lawrence J	Engineer, Mackintosh, Burn, Ld	8, Clive Street	ditto
Stevenson, Robert	Assistant, Gillanders Arbuthnot, & Co	8, Clive Street	ditto
Stewart, Hugh Patrick	Assistant, Blackwood, Bryson & Co	2, Mangoe Lane	ditto
Stewart, J A	Deputy Engineer, Calcutta Improvement Trust	5, Clive Street	ditto
Stewart, Jas S	Manager, McGregor & Balfour, Ld	11, Clive Street	ditto
Stewart, Redvers Buller	Managing Agent, Landale & Clark, Ld	11, Clive Street	ditto
Stockes, C G	Offg. Assistant Commercial Manager, C C M's Office, E I R	E I R House	ditto
Stoddard, W A	Assistant-in-charge, Staff Section, Imperial Bank of India	Strand Road	ditto
Stokes, H G	Partner, Shaw, Wallace & Co	4, Bankshall Street	ditto
Stokes, Noel Theodore	Assistant, Hamilton & Co, Ld	8, Old Court House Street	ditto
Stokoe, C J L	Assistant, Bird & Co	1-1, Clive Street	ditto
Stott, James	Tote Manager, Royal Calcutta Turf Club	11, Russell Street	ditto
Strannack, Cecil Leslie	Partner, Sinclair & Co	5, Commercial Buildings	ditto
Stratford, N R	Assistant Executive Engineer, Port Commissioners' Office	Strand Road	ditto
Struth, David Leighton	Assistant Secretary, J. C Duffus & Co, Ld	5, Fairlie Place	ditto
Stuart, H St. Clair	Assistant Surveyor, Lardner North & Co	8, Strand Road	ditto
Studd, B C	Partner, J Thomas & Co	8, Mission Row	ditto
Studd, Eric	Director, Alexander Jute Mills Co, Ld	8, Camac Street	ditto
Studdert, T G	Director, Samuel Osborn (India), Ld	10, Clive Street	ditto
Sturrock, George S	Br. Manager, North British Rubber Co, Ld	1, British Indian Street	ditto
Sumner, F D C	Jetty Superintendent, Port Commissioners	Jetties	ditto
Surrey J. C.	Manager, Harrisons & Crosfield, Ld	6, Church Lane	ditto

No.	Names.	Style or calling.	Residence or place of business.	Religion.
	Sutherland, J J B	Assistant, Bengal Chamber of Commerce	2, Clive Street	Christian
	Swain, J	Secretary, Motor Union Insurance Co, Ld	1 & 2, Old Court House Corner	ditto
	Swales, Terence Lindsay	Assistant, Ralli Bros, Ld	16, Hare Street	ditto
	Swanson, Ian Nicholas	Covenanted Assistant, Talbot & Co	Tower House, Chowringhee Square	ditto
	Swete, Gerald Frank	Engineer, Burmah Shell Co of India, Ld	Hongkong House	ditto
	Swinton, Thomas Swinhoe	Director, Shalimar Paint, Colour and Varnish Co, Ld	6, Lyons Range	ditto
	Syme, A H	Partner, A M Mair & Co	6, Royal Exchange Place	ditto
	T			
	Tanner, Thomas Reginald Oriel	Assistant, Williamson, Magor & Co	4, Mangoe Lane	Christian
	Tannock, James D	Accountant, Lionel Edwards, Ld	D-1, Clive Buildings	ditto
	Tayler, M C	Managing Director, Carreras (India), Ld	20, Chowringhee	ditto
	Taylor, Alexander Hay	Assistant Manager, South British Insurance Co, Ld	5, Clive Street	ditto
	Taylor, Andrew William	Assistant, Macneill & Co	2, Fairlie Place	ditto
	Taylor, A O'D	Assistant, Reed, Ward & Co	6, Lyons Range	ditto
	Taylor, A T	Director, Great Eastern Hotel, Ld	1, 2, & 3, Old Court House St	ditto
	Taylor, James Niven	Assistant, Ralli Bros, Ld	16, Hare Street	ditto
	Taylor, R W	Dy Chief Engineer, E B R	3, Kaylaghat Street	ditto
	Taylor, W E	Dy Superintendent, Depositor's Deptt, Imperial Bank of India	Strand Road	ditto
	Taylor, W J B	Partner, Johnston & Hoffman	10, Chowringhee	ditto
	Taylor, W R I	Accountant, Mercantile Bank of India, Ld	8, Clive Street	ditto
	Telford, George Henry	Assistant, Commercial Union Assurance Co, Ld	32, Dalhousie Square	ditto

Temple, Frederick Charles (CIE)	Patron, Williams and Temple	7, Old Court House Street	ditto
Thacker, Maneklall Sankelchand	Assistant Superintendent, T/Deptt C E S C, Ld	Victoria House	ditto
Thackrah, S C	Manager, Spencer & Co, Ld	32, Chowringhee	ditto
Thibaut, Ernest George	Mains Engineer, C E S C, Ld	Victoria House	ditto
Thomas, C A	Accounts Officer, C A O's Office, E I R	E I R House	ditto
Thomas, H C, BA	Dy Assistant Valuer, Calcutta Improvement Trust	5, Clive Street	ditto
Thomas, H N	Partner, McLeod & Co	28, Dalhousie Square	ditto
Thomas, M R C	Assistant, J Thomas & Co	8, Mission Row	ditto
Thomas, P J P	Partner, J Thomas & Co	8, Mission Row	ditto
Thompson, A J, A R I B A	Partner, Ballardie, Thompson & Matthews	7, Old Court House Street	ditto
Thompson, Hartley William	Assistant, Ralli Bros, Ld	16, Hare Street	ditto
Thompson, Richard Hilton Marler	Director, Standard Literature Co, Ld	13-1, Old Court House Street	ditto
Thoms, R S	Partner, Innes, Watson & Co	15, Clive Row	ditto
Thoms, S	Partner, Perman & Hynd	9, Clive Street	ditto
Thomson, C	Proprietor, Burnet & Co	22, Canning Street	ditto
Thorman, Christopher Mark	Manager, James, Finlay & Co, Ld	1, Clive Street	ditto
Thornton, B, MIE	Assistant General Manager, Howrah Iron Works (Martin & Co)	12, Mission Row	ditto
Thurston, Eric Algernon Carnaby	Assistant, Martin & Co	12, Mission Row	ditto
Tindall, Charles Cuthbert Percy	Assistant, Place, Siddons & Gough	6, Lyons Range	ditto
Todd, Andrew	Manager, Phipson & Co, Ld	1, Garstin Place	ditto
Todd, Thos	Assistant, Balmer, Lawrie & Co, Ld	103, Clive Street	ditto
Todrick, G A	Acting Agent, Hongkong and Shanghai Banking Corporation	Hongkong House	ditto

No.	Names.	Style or calling.	Residence or place of business.	Religion.
	Toft, W	Partner, Price, Waterhouse, Peat & Co	B-4, Clive Buildings	Chirstian
	Toogood, C W	P. A. to Ch. Mechl. Engineer, E B R	3, Koilaghat Street	ditto
	Townend, H D	Partner, Shaw, Wallace & Co	4, Bankshall Street	ditto
	Troup, George	Mains Engineer, C E S C, Ld	Victoria House	ditto
	Trusler, William J	Executive Engineer, Workshops, Electrical Division, P W D	Writers' Buildings	ditto
	Tucker, A L B	Director, Standard Life Assurance Co	32, Dalhousie Square, South	ditto
	Tuckett, Frederick Hayce (Capt)	Marine Superintendent, I G N & Ry Co, Ld	4, Fairlie Place	ditto
	Tuckett, William Fothergill	Assistant, Gillanders, Arbuthnot & Co	8, Clive Street	ditto
	Tully, William Scarth Carlisle	Assistant, Gillanders, Arbuthnot & Co	8, Clive Street	ditto
	Turnbull, John Bruce	Director, Hoare, Miller & Co, Ld	5, Fairlie Place	ditto
	Turner, A W	Director, Bell's Asbestos and Engineering (India), Ld	10, Clive Street	ditto
	Tyrie, George Aitken	Resident	5, Rawdon Street	ditto
	Tytler, Philip	Secretary, Caledonian Printing Co, Ld	3, Wellesley Place	ditto
	U			
	Urquhart, Ernest	Assistant, Bird & Co	1-1, Clive Street	Christian
	Urquhart, William Hubert Walton	Assistant, Andrew, Yule & Co	8, Clive Row	ditto
	Utley, Walter Bennett	Chief Mechanical Engineer, Railway, Martin & Co	12, Mission Row	ditto
	V			
	Vandyke, Frederick Reginald	Manager, Photo, Survey of India	14, Wood Street	Christian
	Venters, C W M	Import Superintendent, B I S N Co, Ld	8, Strand Road	ditto
	Vernal, M S	Engineer, M S Vernal & Co	Bharat Insurance Buildings, Calcutta	ditto

Verrill, F D	Assistant, Balmer, Lawrie & Co, Ld	103, Clive Street	ditto
Vessey, S J	Asstt Manager, John Dewar & Sons, Ld	12, Hare Street	ditto
Vevers, E	Director, Asbestos Cement (India) Ld	135, Canning Street	ditto
Vickers, H Eustace	Managing Director, The Indian and Eastern Engineering, Co, Ld	5, Mission Row	ditto
Vincent, J D A	Superintending Engineer, Electrical Circle, Bengal	Writers' Buildings	ditto
Vining, L E	Deputy C O P'S (Movement), EIR	E I R House	ditto
Vipond, Vernon Kenneth	Assistant, Royal Exchange Assurance	1&2, Old Court House Corner	ditto
Vlasto, Stephen John	Assistant, Ralli Bros, Ld	16, Hare Stseet	ditto
W			
Wainwright, Thomas Stanley	Bank Officer, Imperial Bank of India	3, Strand Road	Christian
Walford, John Arthur Stewart	Partner, Blacker & Co	2, Clive Street	ditto
Walker, Cyril Oscar	Assistant, Anderson, Wright & Co	22, Strand Road	ditto
Walker, Harold	Managing Director, May & Baker (India), Ld	11, Clive Street	ditto
Walker, James Robert Law	Manager, Alliance Assurance Co, Ld	2, Hare Street	ditto
Walker, J R	Partner, McLeod & Co	28, Dalhousie Square	ditto
Walker, Thomas	Partner, Thomas Walker & Co	6, Royal Exchange Place	ditto
Walker, W A M	Partner, Barry & Co	2, Fairlie Place	ditto
Walker, William John Barr	Manager, *Statesman*, Ld	Statesman House	ditto
Wallace, Ivan Ronald	Sole Proprietor, Ivan Ronald Wallace	135, Canning Street	ditto
Wallace, William	Assistant, Duncan Bros & Co, Ld	101, Clive Street	ditto
Waller, George Dalrymple	Proprietor, George Waller & Co	29, Dalhousie Square	ditto
Waller, Richard Garnett	Assistant, Davenport & Co, Ld	6, Church Lane	ditto

No.	Names.	Style or calling.	Residence or place of business.	Religion.
	Walton, J R	Managing Director, John Walsh & Co (India), Ld	10, Clive Street	Christian
	Walton, P W	Assistant, Mather & Platt, Ld	7, Hare Street	ditto
	Walton, William	Travellor, Alfred Herbert (India), Ld	13-3, Strand Road	ditto
	Ward, A M	Offg Chief Engineer, Port Commissioners' Office	Strand Road	ditto
	Ward, R J D	Manager, John Dickinson & Co, Ld	6, Clive Row	ditto
	Wardley, A N	Partner, Kilburn & Co	4, Fairlie Place	ditto
	Ware, Gerald Oswald	Assistant, Andrew Yule & Co, Ld	8, Clive Row	ditto
	Warner, John Weston	Manager for India, Chloride Electrical Storage Co, Ld	4, Lyons Range	ditto
	Warren, Albert E	General Manager and Secretary, Humayan Properties, Ld	1, Humayan Place	ditto
	Warren, E J	General Manager, G E C (India), Ld	Magnet House, Chittaranjan Avenue, South	ditto
	Warren, P F S	Director, Jessop & Co, Ld	93, Clive Street	ditto
	Warren, William	Director, Martin & Co	12, Mission Row	ditto
	Warren-Boulton, A	Director, Machine Tools (India), Ld	Stephen House	ditto
	Warren-Boulton, C	Managing Director, Machine Tools (India), Ld	Stephen House	ditto
	Waterfield, J E	Assistant, Shaw, Wallace & Co	4, Bankshall Street	ditto
	Waters, John Henry	Mains Superintendent, C E S C, Ld	Victoria House	ditto
	Watkins, A C	Accountant, Chartered Bank of India, Australia & China	1-1, Clive Street	ditto
	Watkins, W S	Office Superintendent, E B R	3, Koilaghat Street	ditto
	Watson, E F	Superintendent, Governor's Estates, Bengal	6, Wellesley Place	ditto
	Watson, Fred Godfrey	Manager, English Electric Co, Ld	D-4, Clive Buildings	ditto

Watson, James Buchan	Manager, Corn Products Co. (India), Ld.	4, Lyons Range	ditto
Watson, J D	Executive Engineer, Canals Division	Treasury Buildings	ditto
Watson, R M	Asstt Executive Engineer, E I R	E I R House	ditto
Watson, Thomas Hart	Branch Manager, Glenfield & Kennedy, Ld	4, Fairlie Place	ditto
Watson, William Bonar	Assistant, Andrew Yule & Co, Ld	8, Clive Row	ditto
Watt, D C	Branch Manager, General Accident, Fire & Life Assurance Corporation, Ld	7, Hare Street	ditto
Watt, J J	Offg L G S Officer C-O P S, E I R	E I R House	ditto
Watters, W J	Distt Elec Engineer, E I R	E I R House	ditto
Watts, F C	Director, Associated Instrument Manufacturers (India) Ltd	B-5, Clive Buildings	ditto
Waugh, G	Superintendent, C M E's Drawing Office, E I R	E I R House	ditto
Webb, Gilbert Murray	Director, J Boseck & Co, Ld	16-5, Chowringhee	ditto
Webb, H F	Manager, J Boseck & Co, Ld	16-5, Chowringhee	ditto
Webb, John Urquhart	Assistant, Hoare Miller & Co, Ld	5, Fairlie Place	ditto
Webber, J W	Manager, Phœnix Assurance Co, Ld	28, Dalhousie Square	ditto
Webster, A	Executive Engineer, Port Commissioner's Office	Strand Road	ditto
Wells, John George Lancaster	Assistant, Sales Department, Imperial Tobacco Co of India, Ld	37, Chowringhee	ditto
Weston, L J T	Mains Engineer, C E S C, Ld	Victoria House	ditto
Whaley, F B	Asstt Comml Manager, E I R	E I R House	ditto
Wharton, A F	Partner, Thomas Walker & Co	6, Royal Exchange Place	ditto
Wharton, Frederick	Manager, Valvoline Oil Co	B-5, Clive Buildings	ditto
Wheeler, C D	Partner, Innes, Watson & Co	15, Clive Row	ditto
Wheeler, W T	Offg Dy Chief Engineer, Port Commissioners' Office	Strand Road	ditto

No.	Names.	Style or calling.	Residence or place of business.	Religion.
	Wheldon, Robert Joseph	Director, Houghton-Butcher (Eastern), Ld	10, Hungerford Street	Christian
	White, C G	Director, Ever Ready (India) Co	5, Garstin Place	ditto
	White, Ernest	Director, Elford Edwards, Ld	7, Old Court House Street	ditto
	White, Ernest Frank	Mechanical Engineer, T E Thomson & Co, Ld	9, Esplanade, East	ditto
	White, E H	Proprietor, Davite Co	29, Waterloo Street	ditto
	White, Philip	Director, British Insulated Cables, Ld	2, Waterloo Street	ditto
	White, S W	Bridge Engineer, E I R	E I R House	ditto
	Whitehorn, Fredrick George	Accountant, Minimax, Ld	Mercantile Buildings	ditto
	Whiteside, Walter Bingham	District Manager, Dunlop Rubber Co (India), Ld	42, Free School Street	ditto
	Whitting, Richard	Accountant, Davenport & Co, Ld	6, Church Lane	ditto
	Whitney, V L	Assistant General Manager, Standard Vacuum Oil Co	6, Church Lane	ditto
	Whyte, George Clark	Assistant, Williamson, Magor & Co	4, Mangoe Lane	ditto
	Whyte, M M	Assistant, Turner, Morrison & Co, Ld	6, Lyons Range	ditto
	Whyte, W M	Assistant, Thos Duff & Co, Ld	3, Clive Row	ditto
	Wickham, R S	Secretary to Agent, Calcutta Tramways Co, Ld	7, Church Lane	ditto
	Widgery, C	Assistant, Turner, Morrison & Co, Ld	6, Lyons Range	ditto
	Wiffen, Charles Arthur	Director, Ranken & Co, Ld	4, Old Court House Street	ditto
	Wiggins, S	Tea Manager, Lipton, Ld	9, Weston Street	ditto
	Wilkins, C F W B	Assistant Manager, Government of India Press	8, Hastings Street	ditto
	Wilkinson, George	Representative, Fairbairn Lawson Combe Barbour, Ld	8, Clive Street	ditto

Wilkinson, G H	Manager, Bell's Asbestos and Engineering (India), Ld	10, Clive Street	ditto
Wilks, N	Manager, Mercantile Bank of India, Ld	8, Clive Street	ditto
Wilks, N A	Director, Brooke Bond India, Ld	2, Metcalfe Street	ditto
Will, A C F	Stores Buyer, Brooke Bond India, Ld	2, Metcalfe Street	ditto
Williams, F C	Accountant, Octavius, Steel & Co, Ld	14, Old Court House Street	ditto
Williams, Frederick George	Director & General Manager, Hukumchand Electric Steel Co, Ld	30, Clive Street	ditto
Williams, G Bransby	Partner, Williams and Temple	7, Old Court House Street	ditto
Williams, Montague	Manager, G Atherton & Co (Eastern), Ld	8, Clive Street	ditto
Williams, Theodore Mark	Assistant, James Finlay & Co, Ld	1, Clive Street	ditto
Williams, Tom Henry	Asstt Manager, J H Fenner & Co, Ltd	Mercantile Buildings	ditto
Williams, Owen R	Director, Guest, Keen, Williams, Ld	7, Council House Street	ditto
Williamson, Charles	Assistant, Gillanders, Arbuthnot & Co	8, Clive Street	ditto
Williamson, James	Manager (Grocery), Army & Navy Stores, Ld	41, Chowringhee	ditto
Williamson, Patrick Hay	Assistant, Williamson, Magor & Co	4, Mangoe Lane	ditto
Williamson, R	Manager, Pioneer Consolidated Co (India), Ld	84, Clive Street	ditto
Williamson, R W	Director, Standard Literature Co, Ld	13-1, Old Court House Street	ditto
Willis, R H	Director, Carreras (India), Ld	20, Chowringhee	ditto
Willmer, Eric John	Assistant, Bird & Co	1-1 Clive Street	ditto
Wilson, D	Director, Andrew, Yule & Co, Ld	8, Clive Row	ditto
Wilson, E	Manager, Carrier Engineering Co, Ld (London)	12, Mission Row	ditto
Wilson, E B	Assistant, Jessop & Co, Ld	93, Clive Street	ditto
Wilson, E D	Genl Manager, Carrier Engineering Co, Ld (London)	12, Mission Row	ditto

No.	Names.	Style or calling.	Residence or place of business.	Religion.
	Wilson, George Maxwell ..	Assistant, Gillanders, Arbuthnot & Co	8, Clive Street	Christian
	Wilson, James, BSC	Engineer, Burmah Shell Company of India, Ld	Hongkong House	ditto
	Wilson, J	Assistant Superintendent, Port Commissioners' Jetties	Jetties	ditto
	Wilson, John	Journalist, Statesman, Ld	Statesman House	ditto
	Wilson, John Lockhart	Manager, Lewis & Tylor, Ld	6, Church Lane	ditto
	Wilson, J R	Partner, J Thomas & Co	8, Mission Row	ditto
	Wilson, J W K	Assistant, Shaw, Wallace & Co	4, Bankshall Street	ditto
	Wilson, M	Director, Willas Construction Co, Ld	19, Chowringhee	ditto
	Wilson, Ronald Westaway	Joint Manager, Nestle & Anglo-Swiss Condensed Milk (Export) Co, Ld.	9-A, Clive Street	ditto
	Wilson, R T	Managing Director, Refrigerators (India), Ld	24-B, Park Street	ditto
	Wilson, R W	Jt. Manager, Nestles & Anglo-Swiss Condensed Milk (Export) Co, Ld.	9-A, Clive Street	ditto
	Wilson, Thomas Alexander	Assistant Manager, Bengal Iron Co, Ld	4, Lyons Range	ditto
	Wise, Arthur Arnold	Assistant, Andrew, Yule & Co, Ld	8, Clive Row	ditto
	Withall, William	Assistant, Bird & Co	1-1, Clive Street	ditto
	Womack, Harold Athelstan, MA (Cantab)	Engineer, Martin & Co	12, Mission Row	ditto
	Wood, C	Director, Brooke Bond India, Ld	2, Metcalfe Street	ditto
	Wood, H. G	Dy Chief Engineer, C E S C, Ld	Victoria House	ditto
	Wood, John Fairley	Assistant, Allahabad Bank, Ld	6, Royal Exchange Place	ditto
	Woodhead, John Lawrence, BA (Cantab)	Assistant, Burmah Shell Company of India, Ld	Hongkong House	ditto
	Woolford, C R B	General Manager, Robt, Ingham, Clark & Co, Ld	2, Clive Row	ditto

Wordsworth, William Christopher	Director & Asstt Editor, Statesman, Ld	Statesman House	ditto
Worthington, Ralph Heron	Director, Andrew, Yule & Co, Ld	8, Clive Row	ditto
Wright, Alex	Assistant, Anderson, Wright & Co	22, Strand Road	ditto
Wright, A C	Director, Shalimar Paint C & V Co, Ld	6, Lyons Range	ditto
Wright, Eric William	Manager, Northern Assurance Co, Ld	7, Hare Street	ditto
Wright, Frederick Charles	Manager, Texas Co (India), Ld	11, Esplanade, East	ditto
Wright, Johnston Steel	Assistant, Bengal Chamber of Commerce	2, Clive Street	ditto

Y

Yeld, P H	Dy Traffic Manager, E B R	3, Koylaghat Street	Christian
Young, Alexander Ogston	Assistant, F W Heilgers & Co	1-1, Clive Street	ditto
Youngman, Reginald	Assistant, Williamson, Magor & Co	4, Mangoe Lane	ditto
Younie, W J	Partner, Price, Waterhouse, Peat & Co	B-4, Clive Buildings	ditto

A

Achar, V Srinivas	Assistant, Prudential Assurance Co, Ld	Clive Buildings	Hindu
Achari, Gnanaprakasam	Accountant, Army Factory Accounts	6, Esplanade, East	ditto
Acharya, Shailaja Prasanna, MA	Lecturer, Ripon College	24, Harrison Road	ditto
Addy, J C	Assistant, Prudential Assurance Co, Ld	Clive Buildings	ditto
Addy, Kiran Chandra, MA, BA (OXON)	Professor, St Paul's College	33-1, Amherst Street	Christian
Adhikari, M K	Assistant (2nd grade), Imperial Bank of India	Strand Road	Hindu
Aditya, Subodh Kumar	Engineer, Builder and Contractor	8-2, Hastings Street	ditto
Aditya, Sudhir Kumar	Engineer and Contractor	8-2, Hastings Street	ditto
Ahmed, A	Manager, Kian Gwan Co (India), Ld	4, Lyons Range	Mahomedan

No.	Names.	Style or calling	Residence or place of business.	Religion.
	Ahmed, Jamall, B A, S G O (Berlin)	Proprietor, " Optic Haus "	11, Esplanade, East	Mahomedan
	Ahmed, Kazimuddin, MA	Professor, Islamia College	8, Wellesley Street	ditto
	Ahmed, Maqbul	Professor, Presidency College	86-1, College Street	ditto
	Ahmed, Mominuddin	Head Assistant, Bengal Secretariat, P W D	Writers' Buildings	ditto
	Ahmed, Muhammad Nizamuddin	Assistant Engineer, Indian Stores Deptt (Inspection)	8, Esplanade, East	ditto
	Ahmed, Qutabuddin (Maulvi)	Landholder	7, Maulvi Lane	ditto
	Ahmed, Tasaddak (Khan Bahadur), BA, BT	Special Officer, Primary Education, Bengal	Writers' Buildings	ditto
	Aikat, Amulya Charan, MA, BL	Professor, Vidyasagar College	39, Shankar Ghose Lane	Hindu
	Aiyer, N N	Accountant, Army Factory Accounts	6, Esplanade, East	ditto
	Ali, Abul Fiaz Muhammad Abdul	Keeper of the Records, Government of India	Treasury Buildings	Mahomedan
	Ali, Roushan, BA	Inspector of Schools, Education Deptt	Municipal Office	ditto
	Ali, S. Ashraff	Landholder	1, Kaiser Street	ditto
	Ali, Shaik Mustafa	Landholder	53, Elliot Road	ditto
	Ali, Syed Asghar, BA	Zamindar	4, Hyat Khan Lane	ditto
	Anis, Cadi Abul Moin Mohd, FRSA	Zamindar	126, Dharamtala Street	ditto
	Ali, Abdul, MA	Professor, St Xavier's College	30, Park Street	ditto
	Annaiyappan, S	Accountant, D A G P and T Office	7, Koilaghat Street	Hindu
	Asadulla, K M, BA	Librarian, Imperial Library	6, Esplanade, East	Mahomedan
	B			
	Bagchi, Haridas, MA, PhD	Lecturer, University College	Senate House	Hindu
	Bagchi, Kshitish Chandra, MA	Inspector of Schools, Education Deptt	Municipal Office	ditto

Bagchi, Prabodh Chandra, MA, D LITT	Lecturer, University College	Senate House		ditto
Bagchi, Shachin	Br Secretary, Lakshmi Insurance Co, Ltd	7, Esplanade, East		ditto
Bagchi, Shashanka Shekhar	Lecturer, Presidency College	86-1, College Street		ditto
Bajoria, Baijnath	Assistant, Shewdayal Ramjeedas	130, Mechuabazar Street		ditto
Bajoria, Ramjidas	Banker and Merchant	130, Mechuabazar Street		ditto
Bajpeyi, Bijaya Krishna	Director, Pacific Minerals, Ltd	100, Clive Street		ditto
Bajpeyi, Prafulla Kumar	Director, Pacific Minerals, Ltd	100, Clive Street		ditto
Bajpeyi, Srikrishna	Jt Managing Director, Pacific Minerals, Ltd	100, Clive Street		ditto
Bajpeyi, Umapati, MA	Professor, Ripon College	24, Harrison Road		ditto
Baksh, A F Nabi	Dy Assistant Valuer, Calcutta Improvement Trust	5, Clive Street		Mahomedan
Baksh, Mahammad Maula (Khan Bahadur), BA	Assistant D P I for Mahomedan Education, Bengal	Writers' Buildings		ditto
Bakshi, Jagannath	Assistant, Martin & Co	12, Mission Row		Hindu
Bal, Gajendra Nath, MSc	Demonstrator, St Xavier's College	30, Park Street		ditto
Bal, Surendra Nath, MSc	Curator, Botanical Survey of India	Indian Museum		ditto
Banerji, Abani Kumar, MSc	Professor, Vidyasagar College	39, Shankar Ghose Lane		ditto
Banerji, A C	Partner, A & N Banerjee & Co	84-A, Clive Street		ditto
Banerji, A C	Asstt Account Officer, A-G's Office	Treasury Buildings		ditto
Banerji, Adityapada, BA	Dy Asstt Controller, Army Factory Accounts	6, Esplanade, East		ditto
Banerji, A N, MA, FRHS (London)	Resident	12, Telipara Lane		ditto
Banerji, Amarendra Nath, MSc	Lecturer, Ripon College	24, Harrison Road		ditto
Banerji, Amulya Chandra	Assistant Engineer-in-charge, E and D, Calcutta Corporation	Municipal Office		ditto
Banerji, Anadi Nath, BE	Outfall Engineer, Calcutta Corporation	Municipal Office		ditto

No.	Names	Style or calling.	Residence or place of business.	Religion.
	Banerji, Arunendra Nath, BSc	Assistant, Martin & Co	12, Mission Row	Hindu
	Banerji, Atul Chandra	Sr Accountant, A-G's Office, Bengal	Treasury Buildings	ditto
	Banerji, Balai Chandra	Partner, The Eastern Japan Trading Co	8, Dalhousie Square, East	ditto
	Banerji, Banshi Bihari, BA	Assistant, Martin & Co	12, Mission Row	ditto
	Banerji, B C, MA	D A G, Accountant-General's Office, Bengal	Treasury Buildings	ditto
	Banerji, Benayendra Nath, MA	Professor, Vidyasagar College	39, Shankar Ghose Lane	ditto
	Banerji, Debjiban, MSc	Director, Kuver, Ld	84, Clive Street	ditto
	Banerji, Dasharati	Managing Director, Great Eastern Exchange, Ld	29, Park Street	ditto
	Banerji, Dhirendra Nath	Electrical Upper Subordinate, Govt. House, Calcutta	Government House	ditto
	Banerji, Dhirendra Nath, LCE	Extra Asstt Superintendent (Drawing), Survey of India	13, Wood Street	ditto
	Banerji, Dinesh Chandra, BE	Insecure Building Inspector, Calcutta Corporation	Municipal Office	ditto
	Banerji, Durga Mohan	P. W. Sr. Accountant, Accountant-General's Office, Bengal	Treasury Buildings	ditto
	Banarji, Fakirdas, MA	2nd Inspector of Schools, Presidency Division	40-1A, Free School Street	ditto
	Banerji, Girindranath	Head Master, Bowbazar High School	170, Bowbazar Street	ditto
	Banerji, Haridas, MSc	Demonstrator, Scottish Church College	4, Cornwallis Square	ditto
	Banerji, Haridas, BCom	Lecturer, Govt Commercial Institute	11, Hastings Street	ditto
	Banerji, Hari Prasanna, MA	Lecturer, University College	Senate House	ditto
	Banerji, Hiran Kumar, MA, B Litt (Oxon)	Professor, Presidency College	86-1, College Street	Christian
	Banerji, H S	Cashier, G E C (India), Ld	Magnet House, Chittaranjan Avenue, South	Hindu
	Banerji, Indu Bhusan, MA	Lecturer, University College	Senate House	ditto
	Banerji, Jagannath, BA	Senior Auditor, E B R	3. Koilaghat Street	ditto

Banerji, Janaki Nath	Director, Great Eastern Exchange, Ld	29, Park Street	ditto
Banerji, Jatindra Mohan, BCom	Accountant, Ltg Deptt, Calcutta Corporation	Municipal Office	ditto
Banerji, Jatindra Nath	Building Surveyor, Calcutta Corporation	Municipal Office	ditto
Banerji, J C	General Manager, J C Banerjee, Ld	20, Strand Road	ditto
Banerji, J C	Partner, Mitra Banerjee & Co	7, Lyons Range	ditto
Banerji, Jitendranath, MA	Lecturer, Calcutta University	Senate House	ditto
Banerji, J N, AMAE	Engineer	26, Badurbagan Lane	ditto
Banerji, K	Merchant	8, Canning Street	ditto
Banerji, Kanailal, MA	Professor, St. Paul's College	33-1, Amherst Street	ditto
Banerji, Kanailal	Supdt, Printing Superintendent's Office, E I R	E I R House	ditto
Banerji, K D	Partner, Pigott Chapman & Co	6, Lyons Range	ditto
Banerji, Kirtish Chandra, MA	Lecturer, Ripon College	24, Harrison Road	ditto
Banerji, K P (Rai Sahib)	Asstt Secretary, Agent's Office, E B R	3, Kaylaghat Street	ditto
Banerji, Kshirode Chandra, BE	District Building Surveyor, Calcutta Corporation	Municipal Office	ditto
Banerji, Manmatha Nath	2nd Grade Assistant, Imperial Bank of India	Strand Road	ditto
Banerji, Manmatha Nath, MSc	Lecturer, University College	Senate House	ditto
Banerji, M N, BSc, BE	Engineer	17, Mangoe Lane	ditto
Banerji, Nani Gopal, BSc, BE	Asstt Engineer, J C Banerjee, Ld	20, Strand Road	ditto
Banerji, Narayan Chandra, MA, PhD	Lecturer, University College	Senate House	ditto
Banerji, Nilambu Kanta, MSc	Partner, A & N Banerjee Co	84-A, Clive Street	ditto
Banerji, Nirmal Kumar	Director, Messrs T N Banerji, Ld	6, Hastings Street	ditto
Banerji, Panchu Gopal	Partner, Banerjee & Co	7, Swallow Lane	ditto

No.	Names.	Style or calling.	Residence or place of business.	Religion.
	Banerji, Pashupati	Sr Accountant, A-G's Office, Bengal	Treasury Buildings	Hindu
	Banerji, Phani Mohan	Proprietor, Campbell Printing Works	1, Lyons Range	ditto
	Banerji, Prabhat Nath	Partner, Martin & Co	12, Mission Row	ditto
	Banerji, Prabodh Chandra	Assistant, Martin & Co	12, Mission Row	ditto
	Banerji, Prabodh Chandra	Merchant	28, Clive Street	ditto
	Banerji, Pratap Chandra	Assistant, Martin & Co	12, Mission Row	ditto
	Banerji, R B, MA	Asstt Accountant-General, D A G P & T Office	7, Koilaghat Street	ditto
	Banerji, Rabindra Nath	Elec. Engineer, Port Commissioners' Jetties	Jetties	ditto
	Banerji, Rabindra Nath	Partner, A B D R & Co	25B, Swallow Lane	ditto
	Banerji, Rakhaldas	Auditor, Chief Auditor's Office, E I R	E I R House	ditto
	Banerji, Ramapati	Manager, Bengal Stores (Birla Bros, Ld)	8, Royal Exchange Place	ditto
	Banerji, R N, BE	Engineer	25, Dharamtala Street (Suite 4)	ditto
	Banerji, Sanat Kumar, BE	Insecure Building Inspector, Calcutta Corporation	Municipal Office	ditto
	Banerji, Santos Chandra	Stevedore	7, Swallow Lane	ditto
	Banerji, Santos Kumar, MSc	Lecturer, Bethune College	181, Cornwallis Street	ditto
	Banerji, Satyendra Nath, BSc, ACII	Secretary, National Insurance Co, Ld	7, Council House Street	ditto
	Banerji, S. C., BA	Director, Eureka Publicity Service	157B, Dharamtala Street	ditto
	Banerji, Shachin, BSc (Glas.), CPE, AMIE (Ind.)	Asstt Engineer, C I T	5, Clive Street	ditto
	Banerji, Shachindra Nath	Asstt. Accountant, Bengal Telephone Corporation, Ld	8, Hare Street	ditto
	Banerji, S N	Secretary, Kumar Bros & Co, Ld	14-15, Raja Woodmunt Street	ditto
	Banerji, S N, BA	Secretary, Union Bank of Bengal, Ld	5, Clive Row	ditto
	Banerji, S N, MA, GDA	Accountant	1B, Old Post Office Street	ditto

Banerji, S N, BSc (Glas)	Asstt Engineer, Calcutta Improvement Trust	5, Clive Street	ditto
Banerji, S N	Manager, Bharat Printing Works	22, Sukea Lane	ditto
Banerji, Sudhangsu Sekhar, BL	Head Assistant, Central Stationery Office	3, Church Lane	ditto
Banerji, Sudhir Lal	Supdt & Acctt, Calcutta Improvement Trust	5, Clive Street	ditto
Banerji, Surendra Chandra, MA, BSc	Professor, Presidency College	86-1, College Street	ditto
Banerji, Surendra Chandra. BSc (Cal)	Asstt Engineer, (Inspection) Indian Stores Deptt	6, Esplanade East	ditto
Banerji, Surendra Nath	P A to Chief Mining Engineer, Railway Board	1, Council House Street	ditto
Banerji, Suresh Chandra, BA	Head Assistant, Historical Record Room	Writer's Buildings	ditto
Banerji. Surjya Narayan	Assistant, C M E's Office, E I R	E I R House	ditto
Banerji, Sushil Chandra, BA (*Rai Sahib*)	Head Assistant, Bengal Secretariat, Appointment Department	Writers' Buildings	ditto
Banerji, Sushil Kumar, BE	Assistant Engineer, J C Banerjee, Ld	20, Strand Road	ditto
Banerji, T N, BA, CE, MIE	Mang Director, J N Banerjee Ld	6, Hastings Street	ditto
Bangur, Gobindlal	Partner, Mugneeram Bangur & Co	7, Lyons Range	ditto
Banker, Manohar Shapuraji	Sub-Accountant, National City Bank of New York	4, Clive Street	Zoroastrian
Baral, Anupchand	Landholder	9-1, Sikdarpara Street	Hindu
Baral, A Pr	Landholder	9-1, Sikdarpara Street	ditto
Baral, Dunia Lal	Landholder	21-2, Mohendra Gossain Lane	ditto
Baral, F Ch	Landholder	9-1, Sikdarpara Street	ditto
Baral, Gour Chand	Cashier, Imperial Tobacco Co of India, Ld	37, Chowringhee	ditto
Baral, Kissen Chand	Director, The Prabartak Trading & Banking Co, Ltd	61, Bowbazar Street	ditto
Baral, Nirmal Chandra	Landholder	8, Hidaram Banerjee Lane	ditto
Barua, Beni Madhab, MA, D Litt	Professor, University College	Senate House	Buddhist

No.	Names.	Style or calling.	Residence or place of business.	Religion.
	Barua, R K, MA (Oxon)	Director, National Indian Life Insurance Co, Ld	12, Mission Row	Hindu
	Basak, Bhupendra Nath, MSc	Lecturer, Scottish Church College	4, Cornwallis Square	ditto
	Basak, Gagan Chandra	Engineer	14-3, Sovaram Basak Street	ditto
	Basak, Ganga Gobinda, MA	Demonstrator, Presidency College	86-1, College Street	ditto
	Basak, Radha Gobinda	Professor, Presidency College	86-1, College Street	ditto
	Basu, A	Chief Accountant, A B D R & Co	25B, Swallow Lane	ditto
	Basu, Abinash Chandra, MA	Professor, Sanskrit College	College Square	ditto
	Basu, A C, MB, DPH	Sanitary Officer, D IV, Calcutta Corporation	26, Nayan Chand Dutt Street	ditto
	Basu, Ajit Kumar	Managing Director, Medland Bose & Co, Ld	13-2, Old Court House Street	ditto
	Basu, A K	Asstt Dist Traffic Superintendent, E B R	3, Koilaghat Street	ditto
	Basu, Amarendra Nath	Inspector of Stores, Indian Stores Deptt (Inspection)	6, Esplanade, East	ditto
	Basu, Amiya Nihar	P A to Director-General of Commercial Intelligence	1, Council House Street	ditto
	Basu, Arabindaksa	Merchant	143, Dharamtala Street	ditto
	Basu, Arun Kumar BSc	Asstt Sub-Assessor, Calcutta Corporation	Municipal Office	ditto
	Basu, Atul Krishna	Deputy Assistant Valuer, Calcutta Improvement Trust	5, Clive Street	ditto
	Basu, Bhupendra Nath, BA	Assistant, Gillanders Arbuthnot & Co	8, Clive Street	ditto
	Basu, Bijaya Krishna	Resident, Laski & Laski, Manchester	70, Clive Street	ditto
	Basu, Binaya Bhusan, BE	Building Inspector, Calcutta Corporation	Municipal Office	ditto
	Basu, Bishnupada	Director, Bengal Waterproof Works, Ld	12, Chowringhee	ditto
	Basu, B K, BE	Engineer	4, Hastings Street	ditto
	Basu, Charu Chandra	Cashier, Barlow & Co	8, Clive Street	ditto

Basu, Charu Chandra, BSc, BT	Vice-Principal, Education Department	Municipal Office	ditto
Basu, Charu Chandra	Accountant, D A-G P & T Office	7, Koilaghat Street	ditto
Basu, C R, BE	Engineer, S K Chakravarti, Ld	1-1A, Mission Row	ditto
Basu, Dhirendra Nath	Partner, D N Bose & Co	12, Kalidas Sinha Lane	ditto
Basu, G C, AMME	Proprietor, G C Basu & Co	34-19, Beadon Street	ditto
Basu, Gurugobinda, BA	Proprietor, G Basu & Co	3-1, Bankshall Street	ditto
Basu, Haradhan	Decorator, Martin & Co	12, Mission Row	ditto
Basu, Hrishikesh, MA	Professor, St. Paul's Cathedral College	33-1, Amherst Street	ditto
Basu, Indra Kumar	Junior Auditor, E B R	1-1D, Nayaratna Lane	ditto
Basu, J	Director, Villiers, Ld	F-3, Clive Buildings	ditto
Basu, Jitendra Nath, MA	Accountant, Office of the Controller of Army Factory Accounts	6, Esplanade, East	ditto
Basu, J K	Proprietor, Sanyal & Co	2, Bethune Row	ditto
Basu, J K, BA	Landholder	11, Mahendra Gossain Lane	ditto
Basu, Jogesh Chandra, BL	Assistant Secretary, The Bharat Insurance Co, Ld	Chittaranjan Avenue	ditto
Basu, Jogindra Mohan, BA	Director, Bengal Waterproof Works, Ld	12, Chowringhee	ditto
Basu, J N	Director, Villiers, Ld	F-3, Clive Buildings	ditto
Basu, Jugal Kishore	Asstt. Cashier, Martin & Co	12, Mission Row	ditto
Basu, Kalipada, BA	Head Assistant, Bengal Secretariat, Reforms Branch	Writers' Buildings	Brahmo
Basu, Kalisadhan	Passing Officer, Imperial Bank of India	Strand Road	Hindu
Basu, Kanon Bihari, MSc	Accountant, D A-G P & T Office	7, Koilaghat Street	ditto
Basu, Mahimaranjan	Building Surveyor, Calcutta Corporation	Municipal Office	ditto
Basu, Mahimohan, BA (Oxon)	Professor, Scottish Church College	4, Cornwallis Square	Christian
Basu, M C	Partner, Bonard & Co	40, Strand Road	Hindu

No.	Names.	Style or calling.	Residence or place of business.	Religion.
	Basu, Manindra Mohan, MA	Lecturer, Calcutta University	Senate House	Hindu
	Basu, Nagendra Nath, MSc	Professor, Ripon College	24, Harrison Road	ditto
	Basu, Nani Gopal, BE	Chief Estimator and Draftsman, Chief Engineer's Department, Calcutta Corporation.	Municipal Office	ditto
	Basu, Narayan Das, MSc	Professor, Islamia College	8, Wellesley Street	ditto
	Basu, Narendra Mohan	Professor, Presidency College	86-1, College Street	ditto
	Basu, N C (*Rai Sahib*)	Superintendent, Office of the Private Secretary to H E the Governor of Bengal	Government House	ditto
	Basu, N G	Manager, Jewel & Co	18, Canning Street	ditto
	Basu, N N, MA	Chief Accountant, Calcutta Corporation	Municipal Office	ditto
	Basu, N N	District Manager, Manufacturers Life Insurance Co	27, Dalhousie Square	ditto
	Basu, Panna Lal	Merchant	62, Amherst Row	ditto
	Basu, Paritos, BE	Engineer	30-6-2, Madan Mitra Lane	ditto
	Basu, Pashupati	Manager, C C Shaha Ld	170, Dharamtala Street	ditto
	Basu, P C, BSc (Glas)	Executive Engineer, Drainage, Calcutta Corporation	Municipal Office	ditto
	Basu, P K, BSc	Assistant, P K Ghose & Co	100, Clive Street	ditto
	Basu, P K	Principal, Bangabasi College	25-1, Scott Lane	ditto
	Basu, P N	Director, Kuver, Ld	84, Clive Street	ditto
	Basu, Prabodh Ch	Officer, Hindusthan Co-operative Insurance Society, Ld	Hindusthan Buildings	ditto
	Basu, Ranjit Kumar, ACA	Accountant, Martin & Co	12, Mission Row	ditto
	Basu, R K	Proprietor, Jewel & Co	18, Canning Street	ditto
	Basu, Santosh Kumar	Engineer, Bhattacharjee & Co	28, Pollock Street	ditto
	Basu, Sarajaksha, BSc	Merchant	143, Dharamtala Street	ditto

Basu, Satish Chandra	Sub-Assessor, Calcutta Corporation	Municipal Office	ditto
Basu, Satyapriya, B com (Lond)	Assistant, Martin & Co	12, Mission Row	ditto
Basu, S C	Manager, Indian National Industrial Co	126, Dharamtala Street	ditto
Basu, S C, BE CE	Engineer	4, Hastings Street	ditto
Basu, Shailendra Nath, BA	Audit Officer, Calcutta University	Senate House	ditto
Basu, Shishir Kumar	Editor and Proprietor, " Vagnadoot "	198-1, Cornwallis Street	ditto
Basu, Shishir Kumar, MA	Sub-Assessor, Calcutta Corporation	Municipal Office	ditto
Basu, Shrihari	Accountant, W W Extension Department, Calcutta Corporation	Municipal Office	ditto
Basu, Shrish Chandra	Landholder	13, Balaram Majumdar Street	ditto
Basu, S N	Landholder	13, Hurro Lal Mitter Street	ditto
Basu, S N	Partner, India Oil Co	Stephen House	ditto
Basu, Sourendra Nath, MA	Accountant, Office of the Controller of Army Factory Accounts	6, Esplanade, East	ditto
Basu, Subodh Kumar	Branch Manager, International G E C (India), Ld	13, Hare Street	ditto
Basu, Sudhansu Kumar, MA	Professor, Vidyasagar College	39, Shankar Ghose Lane	ditto
Basu, Sudhir Chandra, MSc (Cal), BSc (Lond).	Engineer, Bhattacharjee & Co	28, Pollock Street	ditto
Basu, Suresh Chandra	Senior Accountant, Accountant-General's Office, Bengal	Treasury Buildings	ditto
Basu, Sushil Kanta, BSc	Resident Secretary, The Great Eastern Life Assurance Co, Ld	1, Royal Exchange Place	ditto
Basu, Tara Charan, BA	Auditor, C A's Office, E I R.	E I R House	ditto
Basu, Tulsi Charan, BA	Joint Managing Director, Pacific Minerals, Ld	100, Clive Street	ditto
Basu, Upendra Nath	Superintendent, Secretary's Office, Calcutta Corporation	Municipal Office	ditto
Batabyal, Kalachand, BA	Superintendent, Metropolitan Institution (Main)	39, Sankar Ghose Lane	ditto
Batabyal, S S	Assistant Valuer, Calcutta Improvement Trust	5, Clive Street	ditto

No.	Names.	Style or calling.	Residence or place of business.	Religion.
	Batliboi, Sorab R	Incorporated Accountant, S R Batliboi & Co	1-B, Old Post Office Street	Zoroastrian
	Batra, Fateh Chanb, BSc (Edin)	Assistant Engineer (Inspection), Indian Stores Department	6, Esplanade East	Hindu
	Bedi, Bawa Ladha Singh	Director, Eastern Federal Union Insurance Co, Ld	9, Clive Street	Sikh
	Beed, Indrabhusan	Landholder	14, Srinath Das Lane	Hindu
	Bery, Atmaram	Partner, Bery Bros	15, Clive Street	ditto
	Bery, Paramanand	Partner, Bery Bros	15, Clive Ctreet	ditto
	Bhaduri, Amulya Chandra, MA	Secretary, Guranteed Relief Syndicate, Ld	14, Clive Street	ditto
	Bhaduri, B B, BSc	Manager, Holmes Wilson & Co, Ld	Norton Buildings	ditto
	Bhaduri, Jyotsna Shankar, MSc	Managing Director, Guranteed Relief Syndicate, Ld	14, Clive Street	ditto
	Bhaduri, Sadananda	Professor, Presidency College	86-1, College Street	ditto
	Bhagat, Manilal Maneklal	Assistant, Andrew Yule & Co, Ld	8, Clive Row	ditto
	Bhagat, M G	General Manager, Bengal Potteries, Ld	11, Rawdon Street	ditto
	Bhagat, Pheroomal Ghanshamdas BSC (Glas).	Assistant Controller of Purchase, Indian Stores Deptt	8, Esplanade East	ditto
	Bhanja, Jitendra Nath, BE	Insecure Building Inspector, Calcutta Corporation	Municipal Office	ditto
	Bhar, Gurudas, MSc	Professor, Presidency College	86-1, College Street	ditto
	Bharatia, D	Accountant, Central Stationery Store	14. Old Court House Lane	ditto
	Bhargava, Jagadish Prasad	Assistant, Andrew Yule & Co, Ld	8, Clive Row	ditto
	Bhasin, Brijlal	Accountant, Punjab National Bank, Ld	135-36, Canning Stret	ditto
	Bhaskaraiya, C, MA	Deputy Accountant-General, Accountant-Generals' Office	Treasury Buildings	ditto
	Bhattacharya, Aditya Chandra	Director, Standard Sanitary Agency, Ld	64, Bowbazar Street	ditto
	Bhattacharya, Amulya K, BA	Sub-Assessor, Calcutta Corporation	Municipal Office	ditto

Bhattacharya, Arabinda	Confidential Stenographer, Agent's Office, E I R	E I R House	ditto
Bhattacharya, Asoke Nath, MA	Lecturer, Calcutta University	Senate House	ditto
Bhattacharya, Bhavabibhuti	Professor, Bangabasi College	25-1, Scott Lane	ditto
Bhattacharya, Bhutnath	Resident Engineer, J C Banerjee, Ld	20, Strand Road	ditto
Bhattacharya, Bijaya Krishna, MA	Lecturer, City College	102-1, Amherst Street	ditto
Bhattacharya, Birendra Nath, BE	Constructional Engineer, Calcutta Corporation	Municipal Office	ditto
Bhattacharya, Bireshwar	Asstt Manager, Universal Trading Union	9, Dalhousie Square	ditto
Bhattacharya, Bishnu Charan, MA	Professor, Vidyasagar College	39, Shankar Ghose Lane	ditto
Bhattacharya, Charu Chandra, MA	Accountant, D A-G, P & T Office	7, Koilaghat Street	ditto
Bhattacharya, Charu Chandra	Demonstrator, Presidency College	86-1, College Street	ditto
Bhattacharya, Dhirendra Nath	Resident	15, Serpentine Lane	ditto
Bhattacharya, D P	Proprietor, Bhattacharya & Co	11, Clive Row	ditto
Bhattacharya, Durgamohan, MA	Professor, Scottish Church College	4, Cornwallis Square	ditto
Bhattacharya, Dwijendra Nath, MA, BL	Professor, Vidyasagar College	39, Sankar Ghose Lane	ditto
Bhattacharya, Girijapati, MSc	Manager, Adair, Dutt & Co, Ld	5, Dalhousie Square	ditto
Bhattacharya, Gopal Chandra, MA	Accountant, D A-G, P & T Office	7, Koilaghat Street	ditto
Bhattacharya, Gopinath, MA, PRS	Lecturer, Bethune College	181 Cornwallis Street	ditto
Bhattacharya, Gouri Kanta, MSc	Professor, Vidyasagar College	39, Shankar Ghose Lane	ditto
Bhattacharya, Gouri Nath	Lecturer, Presidency College	86-1, College Street	ditto
Bhattacharya, Harimohan	Asstt Accounts Officer, Accountant-General's Office, Bengal	Treasury Buildings	ditto
Bhattacharya, I B	Asstt Audit Officer, C A's Office, E I R	E I R House	ditto
Bhattacharya, Jatindra Nath, BA	Joint Editor, "Ananda Bazar Patrika"	1, Barman Street	ditto

No.	Names	Style or calling	Residence or place of business.	Religion.
	Bhattacharya, Jitendra N ..	Accountant, D A-G, P & T Office ..	.. 7, Koilaghat Street	Hindu
	Bhattacharya, Jogendra Nath ..	Superintendent, Legislative Department, Bengal ..	.. Council House	ditto
	Bhattacharya, K. BE	Engineer	.. 4, Hastings Street	ditto
	Bhattacharya, K	Branch Manager, The Great Eastern Life Assurance Co, Ld	.. 1, Royal Exchange Place ..	ditto
	Bhattacharya, Kalidas, MA ..	Professor, Vidyasagar College . ..	.. 39, Shankar Ghose Lane ..	ditto
	Bhattacharya, Keshab Chandra ..	Sub-Accountant, Imperial Bank of India ..	.. Strand Road	ditto
	Bhattacharya, Krishna Chandra, BE	Building Inspector, Calcutta Corporation ..	.. Municipal Office	ditto
	Bhattacharya, Lalit Mohan, MA ..	Head Master, Maharaja Cossimbazar Polytechnic Institute	.. 1, Nanda Lal Bose Lane	ditto
	Bhattacharya, Manamohan, BSC ..	Superintendent, College Street Market ..	.. College Street Market	ditto
	Bhattacharya, N	Manager, A B D R & Co ..	.. 25B, Swallow Lane	ditto
	Bhattacharya, Narendra Nath ..	Sub-Accountant, Imperial Bank of India ..	.. Strand Road	ditto
	Bhattacharya, Nibaran Chandra, MA, BSC	Professor, Presidency College ..	.. 86-1, College Street	ditto
	Bhattacharya, Nikunja Bihari (Rai Sahib)	A A Officer, A-G's Office, Bengal ..	.. Treasury Buildings	ditto
	Bhattacharya, Nirmal Chandra, MA, BL	Professor, Scottish Church College ..	.. 4, Cornwallis Square	ditto
	Bhattacharya, Panchanan, MA ..	Lecturer, Bethune College ..	.. 181, Cornwallis Street	ditto
	Bhattacharya, P C ..	Director, Associated Engineers, Ld ..	.. 14, Clive Street	ditto
	Bhattacharya, Ramesh Chandra, BSC.	Managing Director, Standard Sanitary Agency, Ld	.. 64, Bowbazar Street	ditto
	Bhattacharya, Rasamaya, MA ..	Professor, Scottish Church College ..	.. 4, Cornwallis Square	ditto
	Bhattacharya, R N	Resident ..	.. 15, Serpentine Lane	ditto
	Bhattacharya, S ..	Managing Agent, Bengal Luxmi Cotton Mills, Ld ..	.. 28, Pollock Street	ditto
	Bhattacharya, Sachchidananda, MA ..	Lecturer, Sanskrit College ..	.. College Square	ditto

Bhattacharya, Sachindra Mohan, BA	Managing Director, Calcutta National Bank, Ld	3 & 4, Hare Street		ditto
Bhattacharya, Sanatan	Senior Auditor, E B R	3, Koilaghat Street		ditto
Bhattacharya, Satish Chandra, MA	Lecturer, City College	102-1, Amherst Street		ditto
Bhattacharya, Satish Ch, I	Accountant, D A-G, P & T Office	7, Koilaghat Street		ditto
Bhattacharya, Satya Jiban, BL	Assistant Manager, Sitalprasad Kharagprasad	31, Burtolla Street		ditto
Bhattacharya, Satyendranath, MA	Attendance Officer, Calcutta Corporation	Municipal Office		ditto
Bhattacharya, Shiva Prasad	Lecturer, Presidency College	86-1, College Street		ditto
Bhattacharya, S M, BA	Secretary, Indian Economic Insurance Co, Ld	15, Clive Street		ditto
Bhattar, Balaki Das	Partner, Sir Sarupchand Hukumchand & Co	30, Clive Street		ditto
Bhattar, Sheokissen	Partner, Sir Sarupchand Hukumchand & Co	30, Clive Street		ditto
Bhose, Gunendra Nath	Landholder	71-2, Cornwallis Street		ditto
Bhose, Sarojendra Nath	Shroff, Hoare Miller & Co, Ld	5, Fairlie Place		ditto
Bilimoria, B A	Director, Indian Cable Co, Ld	2, Waterloo Street		Zoroastrian
Birla, G	Director, Birla Bros, Ld	8, Royal Exchange Place		Hindu
Birla, G D	Director, Birla Bros, Ld	8, Royal Exchange Place		ditto
Birla, J K	Director, Birla Bros, Ld	8, Royal Exchange Place		ditto
Birla, L N	Director, Birla Bros, Ld	8, Royal Exchange Place		ditto
Biswas, Anil Kumar	Partner, D N Biswas & Co	10, Dalhousie Square, East		ditto
Biswas, Atal Kumar	Partner, Oriental Trading Co	84-A, Clive Street		ditto
Biswas, Bipradas, BL	Head Assistant, Surveyor-General's Office	13, Wood Street		ditto
Biswas, B K, BSc	Manager, Bengal Publicity Co	Stephen House		ditto
Biswas, Chuni Lal	Partner, K C Biswas & Co	1, Chowringhee		ditto

No.	Name.	Style or calling.	Residence or place of business.	Religion.
	Biswas, Dasarathi	Partner, Oriental Trading Co	84-A, Clive Street	Hindu
	Biswas, Durgapada, MA	Lecturer, Ripon College	24, Harrison Road	ditto
	Biswas, J N, CE	Engineer	83-1, Upper Circular Road	ditto
	Biswas, J N	Assistant Branch Secretary, Oriental Government Security Life Assurance Co, Ld	2, Clive Row	ditto
	Biswas, Kshitish Chandra	Dy Assistant Valuer, Calcutta Improvement Trust	5, Clive Street	ditto
	Biswas, Nalini Mohan	Building Surveyor, Calcutta Corporation	Municipal Office	ditto
	Biswas, P, BE, CE	Engineer	4, Hastings Street	ditto
	Biswas, Priya Nath, MSc	Professor, Vidyasagar College	39, Shankar Ghose Lane	ditto
	Biswas, Sanat Kumar	Engineer and Proprietor, Bengal Engineering Syndicate	137, Canning Street	ditto
	Biswas, Satyapriya, MA	Professor, Scottish Church College	4, Cornwallis Square	Christian
	Biswas, S C	Personal Assistant to Deputy Chief Engineer, E B R	3, Koilaghat Street	Hindu
	Biswas, S N	Manager, Metropolitan Insurance Co, Ld	28, Pollock Street	ditto
	Biswas, Sudhabindu, MSc	Proprietor, Sun Optical Co	24-1, Cornwallis Street	Brahmo
	Biswas, Sudhir Ranjan, MA	Asstt Secretary, Bengal National Chamber of Commerce	2, Royal Exchange Place	Hindu
	Borah, Ambikanath, MA	Assistant, Martin & Co	12, Mission Row	ditto
	Borah, Gobind Chand, BA	Secretary, Jute Balers' Association	5, Royal Exchange Place	ditto
	Brahma, Nalini Kanta	Professor, Presidency College	86-1, College Street	ditto
	Brahma, Nishi Kanta, MA, BL	Asstt Manager, Tagore Raj Estate	Tagore Castle	ditto
	Brahma, Tarapada, MA	Offg Accountant, D A-G, P & T Office	7, Koilaghat Street	ditto
	Butiwala, Munchershaw Maneckji	Accountant, Muller and Phipps (India), Ld	Avenue House. Chowringhee Square	Zoroastrian

Chakladar, Haran Chandra, MA	Lecturer, University College	Senate House	Hindu
Chakravarti, A C, MA, BL, ASAA, RA	Auditor, Chakravarti, Ghosh, Guha & Co	15, Clive Street	ditto
Chakravarti, Bhupendra Nath, MA	Professor, City College	102-1, Amherst Street	ditto
Chakravarti, Bhutnath, LCE	Director, Standard Engineering Co, Ld	13, Amherst Street	ditto
Chakravarti, Binode Behari, BA, BL	Head Assistant, Current Record Room	Writers' Buildings	ditto
Chakravarti, Brajendra Chandra, BA	Staff Assistant, Imperial Bank of India	Strand Road	ditto
Chakravarti, D	Secretary, Calcutta Stock Exchange Association, Ld	7, Lyons Range	ditto
Chakravarti, D D	Assistant Engineer, Port Commissioners' Office	Strand Road	ditto
Chakravarti, Dhirendra Chandra, PhD	Vice-Principal, Ripon College	24, Harrison Road	ditto
Chakravarti, Dinesh Chandra	Superintendent, Land Acquisition Office	5, Bankshall Street	ditto
Chakravarti, D N, MA, BL, GDA	Auditor, Chakravarti, Ghosh, Guha & Co	15, Clive Street	ditto
Chakravarti, Dwijendra Kumar	Cashier, Standard Life Assurance Co, Ld	32 & 32-1, Dalhousie Square	ditto
Chakravarti, Gurupada, BL	Superintendent, Indian Art School	1, Gangadhar Babu Lane	ditto
Chakravarti, Haricharan, BL	Manager, Bharat Insurance Co, Ld	Bharat Bhawan, Chittaranjan Avenue	ditto
Chakravarti, Jatindra Nath, MA, BL	Head Master, Calcutta Academy	72, Amherst Street	ditto
Chakravarti, J C, BCOM, GDA, RA	Auditor	162, Bowbazar Street	ditto
Chakravarti, Jitendra Nath	Professor, Bangabasi College	25-1, Scott Lane	ditto
Chakravarti, J M	Assistant Accounts Officer, D A-G, P & T Office	7, Koilaghat Street	ditto
Chakravarti, Jogesh Chandra, MA	Audit Inspector, Calcutta Corporation	Municipal Office	ditto
Chakravarti, Kalidas, MA	Professor, City College	102-1, Amherst Street	ditto
Chakravarti, Khagendra Nath	Professor, Presidency College	86-1, College Street	ditto

No.	Names.	Style or calling.	Residence or place of business.	Religion.
	Chakravarti, Madhab Das, MA	Professor, Vidyasagar College	39, Shankar Ghose Lane	Hindu
	Chakravarti, Manaranjan	Accountant, Bengal Central Bank, Ld	86, Clive Street	ditto
	Chakravarti, M L, MSc	Manager, Co-operative Book Depot	54, College Street	ditto
	Chakravarti, Mukundalal	Professor, Bangabasi College	25-1, Scott Lane	ditto
	Chakravarti, Nirmal Chandra, MA	Lecturer, City College	102-1, Amherst Street	Brahmo
	Chakravarti, Panchanan, MA	Lecturer, Calcutta University	Senate House	Hindu
	Chakravarti, P N	Secretary, United India Life Assurance Co, Ld	2, Lyons Range	ditto
	Chakravarti, Ramchandra, MA	Head Master, Shambazar A V School	126, Shambazar Street	ditto
	Chakravarti, R C, MSc	Director, Calcutta Builders' Stores, Ld	62, Bowbazar Street	ditto
	Chakravarti, Samaresh, BSc	Secretary, Light of Asia Insurance Co, Ld	4 & 5, Dalhousie Square	ditto
	Chakravarti, Satish Chandra, MA	Lecturer, University College	Senate House	ditto
	Chakravarti, Satish Chandra, BSC	Asstt Collector, Calcutta Corporation	Municipal Office	ditto
	Chakravarti, Sharat Chandra, BE	Executive Engineer, W W Department, Calcutta Corporation	Municipal Office	ditto
	Chakravarti, Shyamapada	Professor, Bangabasi College	25-1, Scott Lane	ditto
	Chakravarti, S K, BE	Director, S K Chakravarti, Ld	1-1A, Mission Row	ditto
	Chakravarti, Sudhir Chandra, BE, CE, AMEE	Engineer & Contractor	7, Kailash Bose Street	ditto
	Chakravarti, Surendra Nath, MA	Lecturer, Sanskrit College	College Square	ditto
	Chakravarti, Tripurari, MA	Lecturer, University College	Senate House	ditto
	Chakravarti, Tulsidas	Assistant Commercial Manager, C C M's Office, E I R	E I R House	ditto
	Chand, Diwan	Head Assistant, Surveyor-General's Office	13, Wood Street	ditto

Chand, Tara	Partner, Lal Chand & Sons	76, Lower Circular Road		ditto
Chand, Tek	Partner, Lal Chand & Sons	76, Lower Circular Road		ditto
Chanda, Prakash Chandra, BA	Accountant, Imperial Bank (Burrabazar Branch)	195, Harrison Road		ditto
Chandra, Basanta Behary, MA	Librarian, Calcutta University	Senate House		ditto
Chattaraj, B N, BA	Accountant, E B R	3, Koilaghat Street		ditto
Chattaraj, Durgagati, MA	Professor, Presidency College	86-1, College Street		ditto
Chatterji, A B	Organising Officer, Metropolitan Insurance Co, Ld	28, Pollock Street		ditto
Chatterji, A B, CE	Engineer	10, Hastings Street		ditto
Chatterji, Ahibhusan (Rai Sahib)	Stenographer & Sr Council Reporter	Writers' Buildings		ditto
Chatterji, Akshay Coomar	Zamindar	112, Ahmerst Street		ditto
Chatterji, Amarnath, CE	Engineer, T N Banarji, Ld	6, Hastings Street		ditto
Chatterji, Anath Bandhu	Superintendent, Council Section, Legislative Department, Bengal	Council House		ditto
Chatterji, Anil Chandra	Asstt Manager, Scindia Steam Navigation Co, Ld	100, Clive Street		ditto
Chatterji, A P	Sr. Assistant Engineer, Calcutta Improvement Trust	5, Clive Street		ditto
Chatterji, Asoke, MA	Assistant Editor, *The Modern Review*	120-2, Upper Circular Road		Brahmo
Chattarji, Asoke Chandra, BA (Cantab)	Agency Manager, The Bharat Insurance Co, Ld	Chittaranjan Avenue		Hindu
Chatterji, B	Accountant, Calcutta Mint	47, Strand Road		ditto
Chatterji, Bankim Chandra, BA	Head Master, Hare School	87, College Street		ditto
Chatterji, B B	Partner, K C Day & Co	4, Mission Row		ditto
Chatterji, Bhupendra Nath	Landholder	41, Kailas Bose Street		ditto
Chatterji, Bijali Bhusan, MA, BL	Accountant, Office of the Controller of Army Factory Accounts	6, Esplanade East		ditto

No.	Names.	Style or calling.	Residence or place of business.	Religion.
	Chatterji, Bimal Kumar, MSC	Lecturer, Scottish Church College	4, Cornwallis Square	Hindu
	Chatterji, Bipin Bihari	Building Surveyor, Calcutta Corporation	Municipal Office	ditto
	Chatterji, B N	Treasurer, E I R	E I R House	ditto
	Chatterji, B N	Assistant Engineer, Port Commissioners' Office	Strand Road	ditto
	Chatterji, C B	Partner, P Chatterjee	7, Garstin Place	ditto
	Chatterji, Charu Chandra	Railway Cashier, Martin & Co	12, Mission Row	ditto
	Chatterji, D N	Director, Associated Engineers, Ld	14, Clive Street	ditto
	Chatterji, D P, B COM	Managing Director, Dairy Food Supply Co, Ld	87, Lower Circular Road	ditto
	Chatterji, Durga Charan, MA, PRS	Lecturer, Bethune College	181, Cornwallis Street	ditto
	Chatterji, Gokul Chandra	Landholder	41, Kailas Bose Street	ditto
	Chatterji, Gopal Chandra, BA	Accountant, Office of the Controller of Army Factory Accounts	6, Esplanade, East	ditto
	Chatterji, Haran Ch	Partner, N L Roy & Co	7, Lyons Range	ditto
	Chatterji, Haran Chandra, BA	Manager, Longmans Green & Co, Ld	6, Old Court House Street	ditto
	Chatterji, Hari Sadhan, MA, BL	Professor, Ripon College	24, Harrison Road	ditto
	Chatterji, Hiralal, BE	Building Surveyor, Calcutta Corporation	Municipal Office	ditto
	Chatterji, H K	Director, Dairy Food Supply Co, Ld	87, Lower Circular Road	ditto
	Chatterji, Indu Bhusan, BSC, BE	Engineer	21, Baghbazar Street	ditto
	Chatterji, J P	Assistant Engineer, Port Commissioners' Office	Strand Road	ditto
	Chatterji, Kalipada, MA, BL	Proprietor, Industrial Steel Works	29, Strand Road	ditto
	Chatterji, Kanai Lal	Partner, Bidhubhusan Chatterjee	43, Brajadulal Street	ditto
	Chatterji, Karunamaya	Merchant	41, Kailas Bose Street	ditto

Chatterji, Kedar Nath, BSc	Assistant Editor, *The Modern Review*	120-2, Upper Circular Road		Brahmo
Chatterji, Kiran Chandra	Joint Manager, Sen & Pandit	Mercantile Buildings		Hindu
Chatterji, Kishori Mohan	Superintendent, Agent's Office, E I R	E I R House		ditto
Chatterji, K L	Director, Dairy Food Supply Co, Ld	87, Lower Circular Road		ditto
Chatterji, Krishna Dhan, MA	Director, The Prabartak Trading and Banking Co, Ld	61, Bowbazar Street		ditto
Chatterji, Kshitish Chandra, MA	Lecturer, University College	Senate House		ditto
Chatterji, Kshitish Prasad, MA (Cantab)	Education Officer, Calcutta Corporation	Municipal Office		ditto
Chatterji, Manatos	Asstt. Engineer, Port Commissioners' Office	Strand Road		ditto
Chatterji, Manindra Nath	Chief Clerk, C O S Office, E I R	E I R House		ditto
Chatterji, Manmohan	Professor, Presidency College	86-1, College Street		ditto
Chatterji, Nalini Kanta	Landholder	44, Amherst Street		ditto
Chatterji, Nalini Mohan, MA	Lecturer, University College	Senate House		ditto
Chatterji, Nepal Chandra	Accountant, C A O's Office, E I R	E I R House		ditto
Chatterji, P, MSc	Office Superintendent, Zenith Life Assurance Co, Ld	Norton Buildings		ditto
Chatterji, Panchanan	Manager, Continental Commercial Co	14-2, Old China Bazar Street		ditto
Chatterji, Phani Bhusan, MA	Professor, St. Paul's Cathedral College	33-1, Amherst Street		ditto
Chatterji, Phanibhusan, MA	Professor, City College	102-1, Amherst Street		ditto
Chatterji, Prabodh Chandra, MA, FCS (Lond)	Proprietor, Scientific Supplies (Bengal) Co	C37 & 38, College Street Market		ditto
Chatterji, Prafulla Chandra	Managing Director, P Chatterjee & Co	53, Ezra Street		ditto
Chatterji, Priyanath, MA	Professor, City College	102-1, Amherst Street		ditto
Chatterji, Rabindra Nath, MA	Professor, Vidyasagar College	39, Shankar Ghose Lane		ditto

No.	Names.	Style or calling.	Residence or place of business.	Religion.
	Chatterji, Rabindra Nath, MSc	Professor, Scottish Church College	4, Cornwallis Square	Hindu
	Chatterji, Ramesh Chandra, BSc	Manager, The Bengal Gold Works	12, Old Court House Lane	ditto
	Chatterji, Ram Nath	Assistant Engineer, City Division, P W D	Writers' Buildings	ditto
	Chatterji, S	Director, Dairy Food Supply Co, Ld	87, Lower Circular Road	ditto
	Chatterji, S	General Manager, Aryan Assurance, Ld	3 & 4, Hare Street	ditto
	Chatterji, S	Partner, P Chatterjee	7, Garstin Place	ditto
	Chatterji, S	Agency Supervisor, Manufacturers Life Insurance Co	27, Dalhousie Square	ditto
	Chatterji, Satish Chandra, MA	Lecturer, University College	Senate House	ditto
	Chatterji, Shachindra Nath	Proprietor, Aryan Planter's Agency	3 & 4, Hare Street	ditto
	Chatterji, Shaileshwar	Asstt. Treasurer, C A O's Office, E I R	E I R House	ditto
	Chatterji, S K, BCom, GDA	Director, Hooghly Bankers and Traders, Ld	43, Dharamtala Street	ditto
	Chatterji, Somnath, BA	Collector, Calcutta Corporation	Municipal Office	ditto
	Chatterji, Sudhindra Nath, BA	Librarian, Commercial Library	1, Council House Street	ditto
	Chatterji, Sudhir Chandra, BA	Sub-Assessor, Calcutta Corporation	Municipal Office	ditto
	Chatterji, Sudin Chandra	Proprietor, The Bengal Gold Works	12, Old Court House Lane	ditto
	Chatterji, Suresh Chandra, BE	Personal Assistant to Chief Engineer, P W D, Bengal	Writers' Buildings	ditto
	Chatterji, Suresh Chandra,	Suptdg Engineer, Central Circle, P W D	Writers' Buildings	ditto
	Chatterji, Sushil Kumar, MSc	Professor, St. Xavier's College	30, Park Street	ditto
	Chatterji, Tarak Das	Proprietor, Continental Commercial Co	14-2, Old China Bazar Street	ditto
	Chatterji, Umakanta, BE	Engineer, T N Banarji Ld	6, Hastings Street	ditto
	Chatterji, U N	Partner, Sen & Pandit	Mercantile Buildings	ditto

Chaudhuri, Abdul Majid, BA	Head Assistant, Excise Branch, Agri and Ind Dept, Bengal	Writers' Buildings	Mahomedan
Chaudhuri, B N, BE	Engineer, S K Chakravarti, Ld	1-1A, Mission Row	Hindu
Chaudhuri, Charu Chunder	Press Manager, Thorne's Ld	17, Crooked Lane	Christian
Chaudhuri, Hemanga Nath	Assistant, Andrew Yule & Co, Ld	8, Clive Row	Hindu
Chaudhuri, Jatindra Kishore, MA	Professor, Vidyasagar College	39, Shanker Ghose Lane	ditto
Chaudhuri, K L	Mosquito Controlling Officer, Calcutta Corporation	Municipal Office	ditto
Chaudhuri, Kshitish Chandra	Landholder	20, Nimtala Ghat Street	ditto
Chaudhuri, Lokendra Nath	Cashier, Shaw Wallace & Co	4, Bankshall Street	ditto
Chaudhuri, Makhan Lal	Offg Dy Asstt Controller of Army Factory Accounts	6, Esplanade East	ditto
Chaudhuri, N C	Landholder	20, Nimtala Ghat Street	ditto
Chaudhuri, P	Secretary, India Equitable Insurance Co, Ld	102. Clive Street	ditto
Chaudhuri, P N, MA, GDA	Proprietor, P N Chaudhuri	12-1, Old Post Office Street	ditto
Chaudhuri, Prabhat Chandra	Merchant	23, Badur Bagan Lane	ditto
Chaudhuri, Prafulla Chandra, MA, BL	Dy Chief Accounts Officer, E B R	3, Kaylaghat Street	ditto
Chaudhuri, Ramesh Chandra	Accountant, Office of the Controller of Army Factory Accounts	6, Esplanade, East	ditto
Chaudhuri, Ranada Kumar	Director and Secretary, Calcutta National Bank Ld	3 & 4, Hare Street	ditto
Chaudhuri, R K, BA	Accountant, E B R	3, Koilaghat Street	ditto
Chaudhuri, Rohini Mohan, MA, PhD	Lecturer, University College	Senate House	ditto
Chaudhiri, S C (Rai Bahadur)	Managing Agent, Bengal Luxmi Cotton Mills, Ld	28, Pollock Street	ditto
Chaudhuri, Shiva Kumar	Assistant, Anderson Wright & Co	22, Strand Road	ditto
Chaudhuri, S K	Director, Chhajuram & Sons	100, Clive Street	ditto
Chaudhuri, Surendra Nath, BL	Branch Manager, Star of India Insurance Co, Ld	137, Canning Street	ditto

No.	Names.	Style or calling.	Residence or place of business.	Religion.
	Chaudhuri, Suresh Chandra	Landholder	20, Nimtala Ghat Street	Hindu
	Chellaraj, Benjamin Daniel, MA	Professor, St Paul's Cathedral College	33-1, Amherst Street	Christian
	Chhiba, Ramratan	Asstt Engineer, Bengal Telephone Corpn, Ld	1-2, Chittaranjan Avenue	Hindu
	Choksey, Fram Prestonji	Assistant Construction Engineer, C E S C, Ld	Victoria House	Zoroastrian
	Choksey, K P	Chief Electrical Engineer, C E S C, Ld	Victoria House	ditto
	Chowdhury, Chhajuram (Sir), KT, CIE.	Partner, Chhajuram & Sons	100, Clive Street	Hindu
	D			
	Dalal, Ardeshir Rustomji, MA	Director, Tata Iron & Steel Co, Ld	100, Clive Street	Zoroastrian
	Dalal, K M	General Manager, Noakhali Nath Bank, Ld	135 & 136, Canning Street	ditto
	Dalmia, M	Assistant, Birla Bros, Ld	8, Royal Exchange Place	Hindu
	Dandeker, S B, BCom GDA, RA	Accountant	12, Dalhousie Square, East	ditto
	Darbari, Manekji Dadabhai, BCOM, ASAA	Proprietor, M D Darbari & Co	100, Clive Street	Zoroastrian
	Das, Abanibhusan, MSc	Professor, City College	102-1, Amherst Street	Hindu
	Das, Adhar Chandra, MA, PhD	Lecturer, Calcutta University	Senate House	ditto
	Das, Bhupendra Chandra	Professor, Presidency College	86-1, College Street	ditto
	Das, Bhupendra Nath, MA	Lecturer, Scottish Church College	4, Cornwallis Square	Christian
	Das, Dunia Lal	Partner, A B D R & Co	25-B, Swallow Lane	Hindu
	Das, H C, BA	Accountant	2-1, Mission Row	ditto
	Das, J C	Director, Bengal Central Bank Ld	86, Clive Street	ditto
	Das, J N	Assistant Deputy Agent, E I R	E I R House	ditto
	Das, Jogendra Kishore, MA	Manager, M Bhattacharya & Co	10, Bonfield Lane	ditto

Das, Jyotish Chandra, BSc	Director, Calcutta Insurance, Ld	86, Clive Street	ditto
Das, K B, BE, CE	Engineer	79-24A, Lower Circular Road	ditto
Das, Krishnalal, MA	Superintendent, Commercial Intelligence Department India	1, Council House Street	ditto
Das, Maheswar, MA	Lecturer, Calcutta University	Senate House	ditto
Das, Mahie Ranjan	Assistant, Mackinnon Mackenzie & Co	16, Strand Road	ditto
Das, Mohini Mohan	Head Master, Calcutta Training School	8, European Asylum Lane	ditto
Das, N R, BSc (Glas)	Resident Engineer, Drainage, Calcutta Corporation	Hogg Street	ditto
Das, P K	Director, D M Das & Sons, Ld	28, Dalhousie Square	ditto
Das, Pratul Chandra BSc	Assistant, Martin & Co	12, Mission Row	ditto
Das, Rabindra Nath, MSc	Demonstrator, Scottish Church College	4, Cornwallis Square	ditto
Das, Rabindra Nath, BA	Manager, Ramani Mohan Das	26-4, Raja Brajendra Narayan Roy Street.	ditto
Das, Rash Bihari	Sr Accountant, Accountant-General's Office, Bengal	Treasury Buildings	ditto
Das, R N, BA	Manager, Sen & Pandit	Mercantile Buildings	ditto
Das, Saroj Kumar, MA, PhD	Lecturer, University College	Senate House	Brahmo
Das, Shrish Chandra	Accountant, Imperial Bank of India	8, Clive Street	Hindu
Das, S L	Deputy Secretary, Port Commissioners' Office	Strand Road	ditto
Das, S N	Director, Holmes, Wilson & Co, Ld	Norton Buildings	ditto
Das, Tarak Chandra, MA	Lecturer, Calcutta University	Senate House	ditto
Das Gupta, A C, BA, GDA, RA	Accountant	12, Old Post Office Street	ditto
Das Gupta, Amar Prasad, MA, PhD	Assistant Controller, Calcutta University	Senate House	ditto
Das Gupta, Annada Prasad, MA, BL	Senior Teacher, Keshab Academy	148, Manicktala Street	ditto
Das Gupta, Anutos	Professor, Bangabasi College	25-1, Scott Lane	ditto

No.	Names.	Style or calling.	Residence or place of business.	Religion.
	Das Gupta, Arunendra, MA	Professor, Vidyasagar College	39, Shankar Ghose Lane	Hindu
	Das Gupta, Atul Chandra, MA	Professor, Vidyasagar College	39, Shankar Ghose Lane	ditto
	Das Gupta, B N, BSEE (USA)	Managing Director, Indo-Swiss Trading Co, Ld	2, Church Lane	ditto
	Das Gupta. H K, MA	Professor, St. Paul's Cathedral College	33-1, Amherst Street	Christian
	Das Gupta, Jitendra Nath	Assistant Engineer, Calcutta Improvement Trust	5, Clive Street	ditto
	Das Gupta, J N, BA BE MR SAN I	Director, Hindu Mutual Life Assurance Ld	309, Bowbazar Street	Hindu
	Das, Gupta, Nagendra Chandra	Assistant Engineer, City Division, P W D	Writers' Buildings	ditto
	Das Gupta, Paresh, MA	Industrial Surveyor, Bengal	40-1A, Free School Street	ditto
	Das Gupta, Paresh Chandra, AMAE	Member, Association of Engineers	2, Royal Exchange Place	ditto
	Das Gupta, Rajendra Nath	Joint Manager, Sen & Pandit	Mercantile Buildings	ditto
	Das Gupta, Rajendra Nath	Professor, Bangabasi College	25-1, Scott Lane	ditto
	Das Gupta, Ramaprosad, MA	Lecturer, Calcutta University	Senate House	ditto
	Das Gupta, Santos Kumar, MA, BL	Head Clerk, Health Office, Calcutta Corporation	Municipal Office	ditto
	Das Gupta, S N	Director, Indo-Swiss Trading Co, Ld	2, Church Lane	ditto
	Das Gupta, Sudhir Kumar, MA	Professor, Scottish Church College	4, Cornwallis Square	ditto
	Das Gupta, Sukumar	Head Assistant, Bengal Secretariat, P W D	Writers' Buildings	Brahmo
	Das Gupta, Surendra Nath, MA, PhD	Principal, Sanskrit College	College Square	Hindu
	Das Gupta, Tamonash Chandra, MA, PhD	Lecturer, University College	Senate House	ditto
	Datta Gupta, Akshoy Kumar (*Rai Sahib*), MA.	Librarian, Bengal Library	Writers' Buildings	ditto
	Datta Gupta, Jogesh Chandra, BE	Assistant Engineer, Dredger Division, Irrigation Department	3, Charnock Place	ditto
	Datta Majumdar, Navendu, MA, BL	Manager, Calcutta Commercial Bank, Ld	14, Clive Street	ditto
	Davar, Lall Singh, AMIE (Ind)	Proprietor, L S Davar & Co	1-2 Old Court House Corner	ditto
	Davar, V S, ASAA	Partner S R B tliboi & Co	1-B, Old Post Office Street	ditto

Dawood, Adamjee Hajee	Managing Director, Adamjee Hajee Dawood & Co, Ld	4, Dalhousie Square	Mahomedan
De, Abhoy Charan, BA	Partner, A C Dey & Bros	20, Darmahatta Street	Hindu
De, B N, DSc (Eng)	Chief Engineer, Calcutta Corporation	Municipal Office	ditto
De, Charu Chandra, BSc, BE	Engineer	8-2 Hastings Street	ditto
De, Dhirendranath	Landholder	39, Simla Street	ditto
De, G C	Office Manager, The Dunlop Rubber Co (India), Ld	42, Free School Street	ditto
De, Gokuldas, MA	Lecturer, Calcutta University	Senate House	ditto
De, Gour Mohan, MSc	Chemist, Dey & Co	41-B, Clive Street	ditto
De, Haraprasad, MSc, PRS	Professor, Vidyasagar College	39, Shankar Ghose Lane	ditto
De, Jogesh Chandra, MA, BCom	Accountant, Imperial Bank of India (Burrabazar Branch)	195, Harrison Road	ditto
De, Kali Charan, BSc (Glas)	District Controller of Stores, E I R	E I R House	ditto
De, Kiran Chandra	Accountant, Imperial Bank of India	Strand Road	ditto
De, K L, MSc (Cal), BSc (Edin)	Eng Supervisor, Calcutta Corporation, Dist III	Hogg Street	ditto
De, Mukulchandra, ARCA (Lond)	Principal, Government School of Art	28, Chowringhee	ditto
De, Phanindra Lal (*Rai Bahadur*)	Merchant and Landholder	99, Grey Street	ditto
De, P P, BSc, BE	Director, Bengal Belting Works, Ld	14, Clive Street	ditto
De, Purna Chandra	Offg Accountant, D A-G, P & T Office	7, Koilaghat Street	ditto
De, Rajanikanta, MA, BSc	Professor, Scottish Church College	4, Cornwallis Square	ditto
De, Satya Narain	Partner, D N Bose & Co	12, Kalidas Sinha Lane	ditto
De, Satyendra Nath, MSc	Director, Overland Import & Export House (1930), Ld	5, Royal Exchange Place	ditto
De, S C, BSc	Director, Bengal Belting Works, Ld	14, Clive Street	Hindu

No.	Names.	Style or calling.	Residence or place of business.	Religion.
	De, S K, MISE	Mg Director, Sonar Bangla Bank, Ltd	137, Canning Street	Hindu
	De, Subodh Kumar, MA	Lecturer, Scottish Church College	4, Cornwallis Square	ditto
	De, Sudhir Chandra, BA	Landholder	18-A, Hartaki Bagan Lane	ditto
	De, Sudhirendra Nath	Landholder	42, Pathuriaghata Street	ditto
	De, Surendra Nath, BA	Sub-Assessor, Calcutta Corporation	Municipal Office	ditto
	De, Surendra Nath, MA	Sr Accountant, Accountant-General's Office, Bengal	Treasury Buildings	ditto
	De, Tulsi Das	Manager, Bengal Provincial Co-operative Bank, Ld	Writers' Buildings	ditto
	Deb, Keshab Lal	Asstt Manager (Photo), Surveyor-General's Office	14, Wood Street	ditto
	Deb, Malay Kumar, BSc, GDA	Auditor	8-2, Hastings Street	ditto
	Deb. Prafulla Krishna (Kumar Bahadur).	Landholder	106-1, Grey Street	ditto
	Deb, Pramode Krishna	Landholder	106-1, Grey Street	ditto
	Deo, Ranganath, BSc	Senior Chemist, Paterson Engineering Co (India), Ld	2, Dalhousie Square	ditto
	De Purkayastha, Paresh Chandra, MSc.	Demonstrator, St Xavier's College	30, Park Street	ditto
	Desai, Ishwarlal Bhogilal	Br Manager, Metro-Goldwyn-Mayer, India, Ld	5, Chowringhee	ditto
	De Sarker, Krishna Gopal	Partner *A B Patika*, Ld	2, Ananda Chatterjee Lane	ditto
	De Sarkar, Nirmal Chandra, BA (Glas).	Zamindar	12, Sreenath Das Lane	ditto
	Devitre, Pheroze G, BA	Branch Secretary, Central Bank of India, Ld	100, Clive Street	Zoroastrian
	Dhar, A C, BSc, BE	Engineer	119-3, Shambazar Street	Hindu
	Dhar, D N, BA	Proprietor, Imperial Art Cottage	1-A, Tagore Castle Street	ditto
	Dhar, M, BS Mech Eng (U S A)	Proprietor, Dhar Company	84-A, Clive Street	ditto
	Dhar, Nrisinghalal, MSc	Demonstrator, St. Xavier's College	30, Park Street	ditto

Dhar, Ramani Ranjan	Assistant, Martin & Co	12, Mission Row	ditto
Dhar. S P, BSc (Glas)	Engineer and Valuer	9, Old Post Office Street	ditto
Dinshaw, Ardeshir, BE	Engineer	10, Government Place	Zoroastrian
Doshi, A K, BA	Director, Aryan Life Assurance Society, Ld	48, Grosvenor House	Hindu
Driver, Darab Cursetji, MA (Cantab)	Constituted attorney, Tata Iron & Steel Co, Ld	100, Clive Street	Zoroastrian
Durai, K	Track Supply Officer, E I R	E I R House	Hindu
Dutt, Ajit Kumr, BSc	Sub-Assessor, Calcutta Corporation	Municipal Office	ditto
Dutt, A K	Agent, Royal Insurance Co, Ld	26 & 27, Dalhousie Square	ditto
Dutt, Ananta Krishna, BE	Member, Association of Engineers	2, Royal Exchange Place	ditto
Dutt, Anath Bandhu, MA	Head Clerk, C A's Department, Calcutta Corporation	Municipal Office	ditto
Dutt, Atulananda	Partner, *Amrita Bazar Patrika*, Ld	2, Ananda Chatterjee Lane	ditto
Dutt, B C. MSc	Partner, Indo-Trading Co	100, Clive Street	ditto
Dutt, Binode Behari	Head Assistant, Office of Superintending Engineer, Central Circle, P W D	Writers' Buildings	ditto
Dutt, Birendra Nath, BSc	Assistant Controller of Inspection, Indian Stores Department	6, Esplanade East	ditto
Dutt, Birendra Saday, BA (Cantab)	Assistant, Burmah Shell Co of India, Ld	Hong Kong House	ditto
Dutt, B N	Manager, Pirim, India. Ld	57, Ripon Street	ditto
Dutt, C C	Landholder	1, Pataldanga Street	ditto
Dutt Debendranath, BE	District Engineer (III), Calcutta Corporation	Hogg Street	ditto
Dutt, Dev	S S (Personnel), Agents Office, E I R	E I R House	ditto
Dutt, Dwijendra Kumar	Assistant Engineer, Suburban Division, P W D	Writers' Buildings	ditto
Dutt, Harimohan	Partner, Bidhu Bhusan Dutt & Co	20, Darmahatta Street	ditto

No.	Names.	Style or calling.	Residence or place of business.	Religion.
	Dutt, Haritosh	Divisional Accountant, Suburban Division, P W D	Writers' Buildings	Hindu
	Dutt, Harnam Das	Auditor, Chief Auditor's Office, E I R	E I R House	ditto
	Dutt, Hemendra Nath	Director, The Calcutta Commercial Bank, Ld	14, Clive Street	ditto
	Dutt, Hemanta Kumar, BE	Assistant, Martin & Co	12, Mission Row	ditto
	Dutt, Jatindra Krishna	Head Salesman, John Dickinson & Co, Ld	6, Clive Row	ditto
	Dutt, J M, MSc	Broker	2, Royal Exchange Place	ditto
	Dutt, Jogini Kumar	P A to Chief Engineer, Calcutta Corporation	Municipal Office	ditto
	Dutt, Jyotish Chandra	Bullion Keeper, Calcutta Mint	47, Strand Road	ditto
	Dutt, K C	Assistant Registrar of Joint Stock Companies	Treasury Buildings	ditto
	Dutt, K C, AMIEE	Director, General Utilities Co	7, Clive Row	ditto
	Dutt, Krishna Chandra	Superintendent, Office of the Controller of Currency	Treasury Buildings	ditto
	Dutt, Kula Chandra	Partner, Dutt & Brothers	113, Chittaranjan Avenue South	ditto
	Dutt, Kumudini Kanta	Head Assistant, Bengal Secretariat, P H Branch	Writers' Buildings	ditto
	Dutt, Lalita Prasad	Keeper of Records, Bengal Secretariat	Writers' Buildings	ditto
	Dutt, M	Chief Agent, United India Life Assurance Co, Ld	2, Lyons Range	ditto
	Dutt, Manamohan, BA	Accountant, Calcutta Corporation, Dist II	22, Mirzapur Street	ditto
	Dutt, M N, AMIE	Engineer	6, Old Post Office Street	ditto
	Dutt, Nalinaksha, MA, PhD	Lecturer, University College	Senate House	ditto
	Dutt, N C, BA	Officer, Hindustan Co-operative Insurance Society, Limited	Hindusthan Buildings	ditto
	Dutt, Nripendra Kumar, MA, PhD	Professor, Sanskrit College	College Square	ditto
	Dutt, P	Director, Villiers, Ld	F-3, Clive Buildings	ditto

Dutt, P N	Assistant Manager, Robert Ingham Clark & Co, Ld	2, Clive Row	ditto
Dutt, Prakash Sasi	Accountant, Central Forms Store	166, Dharamtala Street	ditto
Dutt, Priyaranjan	Assistant Engineer, City Division, P W D	Writers' Buildings	ditto
Dutt, Radharaman, BE	Insecure Building Inspector, Calcutta Corporation	Municipal Office	ditto
Dutt, Rasik Lal, DSc	Industrial Chemist, Bengal	40-1A, Free School Street	ditto
Dutt, S C, BA, FCI (Birm), GDA	Accountant and Auditor	31, Guruprasad Chaudhuri Lane	ditto
Dutt, S C	Dy Bullion Keeper, Calcutta Mint	47, Strand Road	ditto
Dutt, S C, MA	Professor, St Paul's Cathedral College	33-1, Amherst Street	ditto
Dutt, Shishir K	Chief Agent, Gresham Life Assurance Society, Ld	8, Dalhousie Square, East	Brahmo
Dutt, Shyam Sunder	Assistant Cashier, Martin & Co	12, Mission Row	Hindu
Dutt, S K	Secretary, Bengal Immunity Co, Ld	153, Dharamtala Street	ditto
Dutt, Snehamoy, MSc (Cal)	Professor, Presidency College	86-1, College Street	ditto
Dutt, Sudhamoy, BE	Dy Assistant Valuer, Calcutta Improvement Trust	5, Clive Street	ditto
Dutt, Surendra Nath	Controller, Calcutta Insurance, Ld	86, Clive Street	ditto
Dutt, Sushil Chandra, MA, BL	Professor, Scottish Church College	4, Cornwallis Square	Christian
Dutt, Tarapada (Rai Sahib), BE	Examiner of Patents	1, Council House Street	Hindu
Dutt Gupta, Jogesh Chandra, BE	Assistant Engineer, Dredger Division, P W D	3, Charnock Place	ditto
Dutt Majumdar, N	Director and Manager, The Calcutta Commercial Bank, Ld	14, Clive Street	ditto
Dutt Ray, Jogendranath, MA	District Accountant, D E'S Office	79, Cornwallis Street	ditto
Dyal, Maha Shanker	Staff Assistant, Imperial Bank of India	Strand Road	ditto

No.	Names.	Style or calling.	Residence or place of business.	Religion.
	G			
	Gadgil, Balkrishna Waman, BSc	Manager, Western India Industries	137, Canning Street	Hindu
	Gaffur, Abdul, MA	Accountant, D A-G P and T Office	7, Koilaghat Street	ditto
	Gaggar, Rupnarayan, MA (com)	Assistant Secretary, Marwari Chamber of Commerce	203-1, Harrison Road	ditto
	Gambhir, Desraj	Staff Assistant, Imperial Bank of India	3, Strand Road	ditto
	Ganesan, P N	Manager, Felt and Tarrant (India) Co	4, Lyons Range	ditto
	Ganguli, Amritalal, MA	Professor, Vidyasagar College	39, Shankar Ghose Lane	ditto
	Ganguli, Bhupendranath, MA	Dy License Officer, Calcutta Corporation	Municipal Office	ditto
	Ganguli, D N, BE	Deputy Assessor, Calcutta Corporation	Municipal Office	ditto
	Ganguli, Harendra Nath	Asstt Superintendent, C O S Office, E I R	E I R House	ditto
	Ganguli, J, BE, AMIE	Engineer	6, Hastings Street	ditto
	Ganguli, Jatindra Mohan, BA	Head Assistant, Agri & Industries Deptt, Bengal	Writers' Buildings	ditto
	Ganguli, Jnanada Kanta, MA	Professor, Vidyasagar College	39, Shankar Ghose Lane	ditto
	Ganguli, Kshiti Mohan	Director, Eastern Merchants, Ld	102-1, Clive Street	ditto
	Ganguli, Lalit Mohan	Staff Assistant, Imperial Bank of India	3, Strand Road	ditto
	Ganguli, Mohan Lal, MSc	Lecturer, University College	Senate House	ditto
	Ganguli, P	Share Broker	2, Royal Exchange Place	ditto
	Ganguli, P D	Partner, Universal Trading Co	33, Canning Street	ditto
	Ganguli, Phanindra Lal, MA	Lecturer, Calcutta University	Senate House	ditto
	Ganguli, Pravas Chandra, MSc	Lecturer, Ripon College	24, Harrison Road	ditto
	Ganguli, Rakhal Das	Superintendent, Telegraph Check Office	33, Dalhousie Square, South	ditto

Ganguli, R K, AMIM	Special Officer, C E's Deptt, Calcutta Corporation	Municipal Office		ditto
Ganguli, Satish Chandra, BA	Branch Manager, Brough & Philpott, Ld	55, Bentinck Street		ditto
Ganguli, Subodh Chandra	Branch Manager, Jupiter General Insurance Co, Ld	7, Pollock Street		ditto
Ganguli, Surendra Mohan, DSC	Lecturer, University College	Senate House		ditto
Garg, Beniprasad, BSC	Director, National Cement Mines & Industries, Ld	10, Clive Row		ditto
Garg, Ram Krishna	Director, National Cement Mines & Industries, Ld	10, Clive Row		ditto
Ghani, Hajee Sakoor	Merchant	71-2, Canning Street		Mahomedan
Ghatak, Atul Chandra, MA	Superintendent, University Press	Senate House		Hindu
Ghatak, Mahendra Nath	Assistant Commercial Manager, E I R	E I R House		ditto
Ghosal, Aswini Kumar	Auditor, C A's Office, E I R	E I R House		ditto
Ghosal, N G, BA	Accountant, D A-G P and T Office	7, Koilaghat Street		ditto
Ghosal, Shailendra Nath, MA	License Officer, Calcutta Corporation	Municipal Office		ditto
Ghosal, Upendra Nath, MA, PhD (No I)	Professor, Presidency College	86-1, College Street		ditto
Ghosal, Upendra Nath (No II)	Professor, Presidency College	86-1, College Street		ditto
Ghose, A C, BA	Branch Manager, Brooke Bond, India, Ld	2, Metcalfe Street		ditto
Ghose, A L, BSC	Officer, Hindusthan Co-operative Insurance Society, Limited	Hindusthan Buildings		ditto
Ghose, Amarendra Nath	Partner, Calcutta Glass Stores	3, Royal Exchange Place		ditto
Ghose, Amritalal, MA, BL	Lecturer, City College	102-1, Amherst Street		ditto
Ghose, Amulya Charan	Professor, Vidyasagar College	39, Shanker Ghose Lane		ditto
Ghose, A T (Rai Bahadur)	Landholder	8, Rasik Lal Ghose Lane		ditto
Ghose, B B, AMAE	Partner, General Engineering Co	25-B, Swallow Lane		ditto
Ghose, Bijan Kanti, BA	Manager, *Amrita Bazar Patrika*, Ld	2, Ananda Chatterjee Lane		ditto

No.	Names.	Style or calling.	Residence or place of business.	Religion.
	Ghose, Birendra Chandra, BE	Deputy Assistant Valuer, Calcutta Improvement Trust	5, Clive Street	Hindu
	Ghose, B P	Manager, *Reuters*, Ld	7, Hare Street	ditto
	Ghose, Chandra Kumar	Building Surveyor, Calcutta Corporation	Municipal Office	ditto
	Ghose, D (Rai Sahib)	Assistant Traffic Superintendent, EBR	3, Kaylaghat Street	ditto
	Ghose, Debendra Nath (II)	Sr Accountant, A-G's Office, Bengal	Treausury Buildings	ditto
	Ghose, Debprasad, MA	Curator, Asutosh Museum	Asutosh Building	ditto
	Ghose, Dhirendra Nath	Accountant, Office of the Controller of Army Factory Accounts	6, Esplanade, East	ditto
	Ghose, Dhirendra Nath, MA	Professor, Vidyasagar College	39, Shankar Ghose Lane	ditto
	Ghose, Dhiresh Chand	Partner, Calcutta Glass Stores	3, Royal Exchange Place	ditto
	Ghose, D N, MSc	Partner, M Ghose & Co	36, Strand Road	ditto
	Ghose, Durgapada	Manager, Oriental Trading Co	84-A, Clive Street	ditto
	Ghose, H C	Agency Superintendent, National Indian Life Insurance Co, Ld	12, Mission Row	ditto
	Ghose, H D, MA	Proprietor, The Commercial Bureau	2, Royal Exchange Place	ditto
	Ghose, Hirendranath, BE	Examiner of Patents	1, Council House Street	ditto
	Ghose, H N, MA, BL	Representative, Macmillan & Co, Ld	294, Bowbazar Street	ditto
	Ghose, Jatindra Nath, BA	Accountant, Office of the Controller of Army Factory Accounts	6, Esplanade, East	ditto
	Ghose, Jitendra Nath, BL	Director, Unique Assurance Co, Ld	10, Canning Street	ditto
	Ghose, J K, AMEE	Partner, P K Ghose & Co	12, Chowringhee	ditto
	Ghose, J N	Partner, General Engineering Co	25-B, Swallow Lane	ditto
	Ghose, Jyotirmaya	Professor, Presidency College	86-1, College Street	ditto
	Ghose, K	Editor and Manager, *Calcutta Commercial Gazette*	2, Royal Exchange Place	ditto

Ghose, Kalipada ..	Head Assistant, Central Stationery Office ..	3, Church Lane ..	ditto
Ghose, Kamala Prasanna	Cashier, Mercantile Bank of India, Ld ..	8, Clive Street ..	ditto
Ghose, Kamini Kumar, MA, BT	Head Master, Ripon Collegiate School ..	24, Harrison Road ..	ditto
Ghose, Kshetra Mohan, BSc	Professor, St Xavier's College ..	30, Park Street ..	ditto
Ghose, Kumud Bandhu, MSc	Accountant, D A-G P and T Office ..	7, Koilaghat Street ..	ditto
Ghose, L K ..	Partner, General Engineering Co ..	25-B, Swallow Lane ..	ditto
Ghose, M ..	Partner, M Ghose & Co ..	36, Strand Road ..	ditto
Ghose, Manindra Nath ..	Supervisor, Engineering Dept, Drainage, Calcutta Corporation ..	Municipal Office ..	ditto
Ghose, Manindra Nath ..	Sub-Assessor, Calcutta Corporation ..	Municipal Office ..	ditto
Ghose, M N, MCE ..	Managing Proprietor, Oriental Machinery Supplying Agency, Ld	20-1, Lall Bazar Street ..	ditto
Ghose, Mohit Mohan, MSc	Lecturer, University College ..	Senate House ..	ditto
Ghose, Nalini Bhusan ..	Accountant, D A-G P and T Office ..	7, Koilaghat Street ..	ditto
Ghose, Naresh Chandra ..	Professor, Presidency College ..	86-1, College Street ..	ditto
Ghose, Nirad Bihari ..	Landholder ..	13, Nayanchand Dutt Street	ditto
Ghose, Niranjan ..	Secretary, Publishing House, Y M C A .	5, Russell Street ..	ditto
Ghose, Nirmal Chandra ..	Zamindar ..	2, Loudon Street ..	ditto
Ghose, N K ..	Partner, P K Ghose & Co ..	12, Chowringhee ..	ditto
Ghose, N N, BA ..	Manager, Chakravarti, Ghose, Guha & Co ..	15, Clive Street ..	ditto
Ghose, Pabitra Kumar, BSc	Incorporated Accountant, P K Ghose & Co ..	100, Clive Street ..	ditto
Ghose, Panchanan ..	Subdivisional Officer, Govt House, Calcutta ..	Government House ..	ditto
Ghose, Pashupati Charan	Chief Accountant, Roneo, Ld ..	32-1, Dalhousie Square ..	ditto
Ghose, Pashupati Nath ..	Landholder ..	8, Rasik Lal Ghose Lane ..	ditto

No.	Names.	Style or calling.	Residence or place of business.	Religion.
	Ghose, P C, BA	Partner, D N Bose & Co	12, Kalidas Sinha Lane	Hindu
	Ghose, Phanindra Nath, MA, PhD, DSc	Professor, University College	92, Upper Circular Road	ditto
	Ghose, P K	Accountant, D A-G P & T Office	7, Koilaghat Street	ditto
	Ghose, P K, AMME	Partner, P K Ghose & Co	12, Chowringhee	ditto
	Ghose, Prafulla Chandra, MA	Professor, Presidency College	86-1, College Street	ditto
	Ghose, Prafulla Chandra, MA, BSc	Lecturer, University College	Senate House	ditto
	Ghose, Puridas, BE	Assistant Resident Engineer, W W Extension, Calcutta Corporation	Municipal Office	ditto
	Ghose, Rabindra Narayan, MA	Principal, Ripon College	24, Harrison Road	ditto
	Ghose, Radharaman	Accountant, D A-G P and T Office	7, Koilaghat Street	ditto
	Ghose, Rajendra Krishna	Zamindar	1, Jorabagan Street	ditto
	Ghose, Ramesh Chandra	Deputy Superintendent, Commercial Intelligence and Statistics	1, Council House Street	ditto
	Ghose, Rashbehari	Merchant	9, Clive Row	ditto
	Ghose, R K	Partner, General Engineering Co	25-B, Swallow Lane	ditto
	Ghose, Satyendra Nath, MSc	Sub-Assessor, Calcutta Corporation	Municipal Office	ditto
	Ghose, S C, B Sc	Assistant, P K Ghose & Co	100, Clive Street	ditto
	Ghose, S C	Partner, Universal Trading Co	33, Canning Street	ditto
	Ghose, S C	Estate Superintendent, Port Commissioners' Office	Strand Road	ditto
	Ghose, Shanti Kumar, BE	Building Surveyor, Calcutta Corporation	Municipal Office	ditto
	Ghose, Sharat Chandra, MA	Organizing Manager, Zenith Life Assurance Co, Ld	Norton Buildings	ditto
	Ghose, Sharat Chandra, BA	Proprietor, Dwarkin & Son	11, Esplanade, East	ditto

Ghose, Shiva Prasanna	Zamindar	75, Beadon Street	ditto
Ghose, Shuddhodan, DSc	Lecturer, University College	92, Upper Circular Road	ditto
Ghose, S K, ASAA, RA	Accountant	4, Hastings Street	ditto
Ghose, S M	Builder & Contractor	57, Chittaranjan Avenue, South	ditto
Ghose, S M	Health Officer, Calcutta Corporation, District No I	79, Cornwallis Street	ditto
Ghose, Sripada, BE	Assistant Engineer, City Division, P W D	Writers' Buildings	ditto
Ghose, Subodh Chandra	Assistant Engineer, Public Health Department, Bengal	3, Charnock Place	ditto
Ghose, Subodh Chandra, BSc, BE	Engineer, District No I, Cal Corporation	79, Cornwallis Street	ditto
Ghose, Subodh Chandra	Electrical Engineer, Universal Trading Union	9, Dalhousie Square, East	ditto
Ghose, Suhrid Kumar	Assistant Assessor, Calcutta Corporation	Municipal Office	ditto
Ghose, Sukhendra Nath	Executive Engineer, P H D, Bengal	3, Charnock Place	ditto
Ghose, Sunil Kanti	Partner, *Amrita Bazar Patrika*, Ld	2, Ananda Chatterjee Lane	ditto
Ghose, Suresh Chandra, MA	Lecturer, City College	102-1, Amherst Street	ditto
Ghose, Sushil Chandra	Managing Partner, Universal Trading Co	33, Canning Street	ditto
Ghose, Swadesh Bhusan, BA	Partner, Calcutta Glass Stores	3, Royal Exchange Place	ditto
Ghose, Tara Prasanna	Shroff, Mercantile Bank of India, Ld	8, Clive Street	ditto
Ghose, Tarun Kumar, BSc	Partner, Ghose & Saha	1-B, Old Post Office Street	ditto
Ghose, Tushar Kanti	Editor, *Amrita Bazar Patrika*, Ld	2, Ananda Chatterjee Lane	ditto
Ghose, Upendra Nath, MA (Rai Sahib)	Deputy Assistant Controller of Army Factory Accounts	6, Esplanade, East	ditto
Gidwani, Tularam Udharam	Asstt Manager, J B Advani & Co, Ld	104, Old China Bazar Street	ditto
Goenka, Gajanand	Merchant	5, Bysack Street	ditto
Goswami, Mahendra Nath, MA, Dr	Lecturer, University College	92, Upper Circular Road	ditto

No.	Names.	Style or calling.	Residence or place of business.	Religion.
	Goswami, Pramatha Nath	Professor, Bangabasi College	25-1, Scott Lane	Hindu
	Goswami, Surendranath	Professor, Bangabasi College	25-1, Scott Lane	ditto
	Grover, Mulchand, BA, LLB	Asstt Secretary, Lakshmi Insurance Co, Ld	7, Esplanade East	ditto
	Guha, Jnanendra Chandra (Rai Sahib)	Personal Assistant to the Inspector-General of Prisons, Bengal	Writers' Buildings	ditto
	Guha, Rajendra Nath, BA	Asstt Collector, Calcutta Corporation	Municipal Office	ditto
	Guha, S C, BA, GDA, RA	Auditor, Chakravarti, Ghose, Guha & Co	15, Clive Street	ditto
	Guha, S K, BSc, BE	Executive Engineer, Damodar Division	Treasury Buildings	ditto
	Guin, Lalit Mohan	Head Assistant, Central Stationery Store	3, Church Lane	ditto
	Guin, N K, MA, BSc	Professor, St Paul's Cathedral College	33-1, Amherst Street	Christian
	Gupta, Asoka Kumar	Rector, Boys' Nursery Home	6, Nalin Sarkar Street	Hindu
	Gupta, Debaprasad, MA, BL	Landholder	5, Middleton Street	ditto
	Gupta, Dhirendra Nath	Sub-Assessor, Calcutta Corporation	Municipal Office	ditto
	Gupta, G C	Landholder	5, Middleton Street	ditto
	Gupta, Hrisikesh	Landholder	7, Gooptu Lane	ditto
	Gupta, Iresh Chandra, MSc	Shareholder S C Sons, Ld	14, Clive Street	ditto
	Gupta, K	Branch Manager, Commercial Pine Forests, Ld	4, Lyons Range	ditto
	Gupta, K C	Principal, Vidyasagar College	39, Sankar Ghose Lane	ditto
	Gupta, L K	Assistant, McLeod & Co	28, Dalhousie Square	ditto
	Gupta, Manaranjan, MSc	Lecturer, University College	Senate House	ditto
	Gupta, Naresh Chandra	Director, S C Sons, Ld	14, Clive Street	ditto

Gupta, Paresh Chandra	Superintendent, W W Dept, Calcutta Corporation	Municipal Office	ditto
Gupta, Premananda	Assistant, Martin & Co	12, Mission Row	Brahmo
Gupta, Pulin Behary	Bank Officer, Imperial Bank of India	3, Strand Road	Hindu
Gupta, Rabindranath, MA	Lecturer, Govt Commercial Institute	11, Hastings Street	ditto
Gupta, Raghunath	Staff Assistant, Imperial Bank of India	3, Strand Road	ditto
Gupta, Ramaprasad	Landholder	7, Middleton Street	ditto
Gupta, Rebatimohan, BE	Resident Engineer, W W Extension, Calcutta Corporation	Municipal Office	ditto
Gupta, R R	Asstt Audit Officer, C A's Office, E I R	E I R House	ditto
Gupta, Samirendra Nath	Assistant, Bengal Iron Co, Ld	4, Lyons Range	ditto
Gupta, Shailesh Chandra, BA	Director, S C Sons, Ld	14, Clive Street	ditto
Gupta, Sisir Kumar	Assistant, Bird & Co	1-1, Clive Street	ditto
Gupta, S P, MSC	Landholder	5, Middleton Street	ditto
Gupta, Sudhir Kumar, BA	Assistant, Martin & Co	12, Mission Row	ditto
Gupta, Surendra Nath	Local Secretary, North British & Mercantile Insurance Co	101-1, Clive Street	Brahmo
Gupta, V P, BA	Accountant, D A-G P and T Office	7, Koilaghat Street	Hindu
Gutgutia, Kashinath, BCom	Joint Honorary Secretary, Marwari Association	134, Mechua Bazar Street	ditto
Guzdar, K M	Partner, P M Guzdar & Co	43, Ezra Street	Zoroastrian
Guzdar. N M	Partner, P M Guzdar & Co	43, Ezra Street	ditto
Guzdar, P M	Partner, P M Guzdar & Co	43, Ezra Street	ditto

H

Hakim, Ataul, MA	Professor, Islamia College	8, Wellesley Street	Mahomedan
Hakim, Razaul, MA, BL	Industrial Surveyor, Bengal	40-1A, Free School Street	ditto

No.	Names.	Style or calling	Residence or place of business.	Religion.
	Haldar, A K, MSc, BL	Joint Chief Agent, Zenith Life Assurance Co, Ld	Norton Buildings	Hindu
	Haldar, S, BSc	A T S, E B R	3, Kaylaghat Street	ditto
	Haridas, Anandji	Managing Director, Anandji Haridas & Co, Ld	1, Meerbohar Ghat	ditto
	Hashim, M	Dy Chief Auditor, C A's Office, E I R	E I R House	Mahomedan
	Hedayetullah, Syed, MSc, Phd	Lecturer, University College	92, Upper Circular Road	ditto
	Home, Amal	Editor, *Calcutta Municipal Gazette*	Municipal Office	Hindu
	Hossain, A, BA	Agent, Central Bank of India, Ld	71, Cross Street	Mahomedan
	Hossain, Altaf, MA	Professor, Islamia College	8, Wellesley Street	ditto
	Hossain, Attar (Md), BA	Sub-Assessor, Calcutta Corporation	Municipal Office	ditto
	Hossain, M Ahmed, MSc	Professor, Islamia College	8, Wellesley Street	ditto
	Hossain, S M Moazzem, MA	Sub-Assessor, Calcutta Corporation	Municipal Office	ditto
	Hui, J C	Director, Indo-Swiss Trading Co, Ld	28, Pollock Street	Hindu
	Huq, Aminul (Maulvi), BA	Head Assistant, Bengal Secretariat, Judicial Department	Writers' Buildings	Mahomedan
	Huq, Mahfuzul	Professor, Presidency College	86-1, College Street	ditto
	Huq, Mahammad Fazlul, BA	Head Assistant, Bengal Secretariat, Education Department.	Writers' Buildings	ditto
	I			
	Islam, Md Zahurul (Maulvi), MA	Professor, Islamia College	8, Wellesley Street	Mahomedan
	Islam, Ziaul (Maulvi), BE	Assistant Engineer, Dredger Division, P W D	3, Charnock Place	ditto
	Iyengar, B K T, BSc	Asstt Accountant-General, A-G's Office, Bengal	Treasury Buildings	Hindu
	Iyengar, K K, MA	Asstt Accountant-General, A-G's Office, Bengal	Treasury Buildings	ditto

Iyer, A M Gopala, MA	Manager, East India Film Co	2-1, Central Avenue	ditto
Iyer, A V Ramalinga, BA, BE, MIE	Director, Indian Mutual Life Association, Ltd	8-2, Hastings Street	ditto
Iyer, C Venkatarama, BA	P W Sr Accountant, A-G's Office, Bengal	Treasury Buildings	ditto
Iyer, K Gopal	Accountant, D A-G P & T Office	7, Koilaghat Street	ditto
Iyer, P S Ramchandra, BA	Accountant, D A-G P & T Office	7, Koilaghat Street	ditto
Iyer, P Subramania	P A to Manager, N I L Ins Co, Ld	12, Mission Row	ditto
Iyer, Ram Krishna	Offg Accountant, D A-G P & T Office	7, Koilaghat Street	ditto
Iyer, S E, BA	Offg A A O, D A-G P & T Office	7, Koilaghat Street	ditto
Iyer, S K	Accountant, D A-G P & T Office	7, Koilaghat Street	ditto
Iyer, Subraya Rama	Branch Manager, Govan Bros, Ld	20, Park Street	ditto
Iyer, T Adisesh, BCom	Accountant, E B R	3, Koilaghat Street	ditto
Iyer, V S S	Accountant, D A-G P & T Office	7, Koilaghat Street	ditto

J

Jain, Daulat Chand	Auditor, Chief Auditor's Office, E I R	E I R House	Hindu
Jajharia, Nandkishore	Director, Shree Radhakrishna Sugar Mills, Ld	138, Harrison Road	ditto
Jajharia, Ramdhandas	Director, Shree Radhakrishna Sugar Mills, Ld	138, Harrison Road	ditto
Jajharia, R K	Managing Director, Shree Radhakrishna Sugar Mills, Ld	138, Harrison Road	ditto
Jalan, J	Assistant, Birla Bros, Ld	8, Royal Exchange Place	ditto
Jatia, Champalal	Landholder and Merchant	21, Rupchand Roy Street	ditto
Jatia, Kanailal	Landholder and Merchant	21, Rupchand Roy Street	ditto
Jhunjhunwalla, L N	Merchant	73, Cross Street	ditto

No.	Names.	Style or calling.	Residence or place of business.	Religion.
	K			
	Kabir, Humayun Z A, MA, BA (Oxon)	Lecturer, Calcutta University	Senate House	Mahomedan
	Kalimur, Shah (Maulvi), MA	Lecturer, Calcutta University	Senate House	ditto
	Kanji, Govindji (Shah)	Branch Manager, Jeewanlal (1929), Ld	101, Clive Street	Hindu
	Kanoriya, G	Assistant, Birla Bros, Ld	8, Royal Exchange Place	ditto
	Kanoriya, J P	Assistant, Birla Bros, Ld	8, Royal Exchange Place	ditto
	Kanoriya, Ramnath	Merchant	29, Banstolla Street	ditto
	Kanoriya, Ramsunder	Director, National Cement Mines & Industries, Ld	10, Clive Row	ditto
	Kapoor, Brij Bihari Lal	Sub-Accountant, National City Bank of New York	4, Clive Street	ditto
	Kapoor, Sitaram	Accountant, Allahabad Bank, Ld	6, Royal Exchange Place	ditto
	Kar, Karuna Kishore, BL	Managing Director, Unique Assurance Co, Ld	10, Canning Street	ditto
	Kar, S K, BSc, ASAA, AISA	Accountant	E-4, Hastings Street	ditto
	Karforma, Narendra Kumar, MA	Professor, Scottish Church College	4, Cornwallis Square	ditto
	Karmally, H	Manager, Adamjee Hajee Dawood & Co, Ld	4, Dalhousie Square, East	Mahomedan
	Karnani, Chandanmull (Rai Saheb)	Banker & Merchant	3, Synagogue Street	Hindu
	Khaitan, Gouriprasad	Proprietor, Khaitan Sons & Co	43, Zakaria Street	ditto
	Khambata, Framroze Merwanji	Manager, Polson Manufacturing & Co	44, Dharamtala Street	Zoroastrian
	Khan, Abdul Latiff (Khan Bahadur)	Personal Assistant to Director of Public Instruction, Bengal	Writers' Buildings	Mahomedan
	Khan, Mosaheb Ali, MA	Dy License Officer, Calcutta Corporation	Municipal Office	ditto
	Khan, Samsuddin Ahmed, MA	Inspector of Schools, Education Department	Municipal Office	ditto

Khan, Samsamuddin, BA	Secretary, Young Muslim Literary Club	13-4 B, Collin Lane	ditto
Khan, Syeduddin, A W, BA	Head Assistant, Bengal Secretariat, P W D	Writers' Buildings	ditto
Khan, Zakaulla, BSc (Lond)	Asstt Engineer, Calcutta Improvement Trust	5, Clive Street	ditto
Khandelwal. Kedarnath, BA, LLB	Partner, Narayandas Khandelwal & Co	69-A, Amherst Street	Hindu
Khanna, Roshanlal	Assistant, Andrew Yule & Co, Ld	8, Clive Row	ditto
Khemka, B L	Proprietor, East India Film Co	2-1, Central Avenue	ditto
Khettry, Lakshmi Narayan	Merchant & Landholder	44, Manicktalla Street	ditto
Khettry, Shyamlal	Bill Examiner, Imperial Bank of India	3, Strand Road	ditto
Khondkar, Johadar Rahim	Chief Clerk, Ericsson Telephone, Ld	21, Old Court House Street	Mahomedan
Khosla, Keshav Chandra, BSc (Eng)	Asstt Engineer, Indian Stores Department (Inspection)	6, Esplanade East	Hindu
Khosla, Ram Kishen	Assistant Engineer, Indian Stores Department (Inspection)	6, Esplanade, East	ditto
Khuda, Quadrati (Dr)	Professor, Presidency College	86-1, College Street	Mahomedan
Kibria, Gholam, Maulvi. BA, BT	Head Master, Calcutta Model School	8, European Asylum Lane	ditto
Kolay, Bhutnath	Landholder	171, Bowbazar Street	Hindu
Kotval, Shantaram Balkrishna, BA	Secretary, Shree Radhakrishna Sugar Mills, Ld	138, Harrison Road	ditto

No.	Names.	Style or calling.	Residence or place of business.	Religion.
	Krishnamachari, V, BA	Asstt Accounts Officer, D A-G P & T Office	7, Koilaghat Street	Hindu
	Krishnan, Kariamanikkam Srinivasa, DSC.	Professor, Indian Association for the Cultivation of Science	210, Bowbazar Street	ditto
	Krishnan, S S, BA	Assistant Accountant-General, A-G's Office	Treasury Buildings	ditto
	Krishnaswami, V S, BA	Assistant Accounts Officer, E B R	3, Koilaghat Street	ditto
	Kulkarni, Haramba Suryanarayan	Engineer, English Electric Co, Ld	D-4, Clive Buildings	ditto
	Kumar, Kali Kumar, MSc	Lecturer, University College	92, Upper Circular Road	ditto
	Kumar, Kumar Krishna, MA	Partner, Sitalprasad Kharagprasad	31, Burtolla Street	ditto
	Kumar, Lalit Mohan	Assistant Traffic Manager, Bengal Telephone Corporation, Ld	8, Hare Street	ditto
	Kumar, Prakash Chandra, BSc	Partner, Eastern Shipping Agency	8. Dalhousie Square, East	ditto
	Kumar, Pravas Chandra	Director, T D Kumar & Bros, Ld	67-4, Strand Road	ditto
	Kumar, Pravat Chandra	Manager, Eastern Shipping Agency	8. Dalhousie Square, East	ditto
	Kumar, S, AMICE	Engineer	28, Neogipukur Lane	ditto
	Kumar, Surendra Nath	Superintendent, Reading-rooms, Imperial Library	6, Esplanade, East	ditto
	Kundu, Ashutos	Sub-Assessor, Calcutta Corporation	Municipal Office	ditto
	Kundu, Suresh Chandra, BA	Head Master, Town School	Shampukur Street	ditto
	Kunhappa, M, BA	Accountant, E B R	3, Koilaghat Street	ditto

L

Laha, Shashanka Shekhar, BA	Partner, Laha & Co	70-1 Clive Street	Hindu
Lahiri, Jagadindra Nath	Manager and Secretary, Bengal Chemical and Pharmaceutical Works, Ld	31, Chittaranjan Avenue, South	ditto
Lahiri, J N, MSc (Cal & U S A)	Managing Director, Bengal Belting Works, Ld	14, Clive Street	ditto
Lahiri, Kalipada, MSc	Sr Accountant, Accountant-General's Office, Bengal	Treasury Buildings	ditto
Lahiri, Nirad Kumar, MA	Inspector of Schools, Education Department	Municipal Office	ditto
Lahiri, Upendranath	Clerk, Mackinon Mackenzie & Co	16, Strand Road	ditto
Lal, Manohar	Auditor, C A's Office, E I R	E I R House	ditto
Lala, Shib Narayan, AISA (Lond)	Professor, Scottish Church College	4, Cornwallis Square	ditto
Laskar, Radha Kishore, BA	Officiating Accountant, D A-G P & T Office	7, Koilaghat Street	ditto
Latif, Sarhan Camrudin, BA (Cantab)	Asstt Controller of Purchase, Indian Stores Deptt	6, Esplanade, East	Mahomedan
Law, Gokul Chandra (Kumar)	Director, Bengal Bonded Warehouse Association	102, Clive Street	Hindu
Law, Narendra Nath, MA, PhD	Landholder	96, Amherst Street	ditto
Law, Santos Chandra, BA	Merchant and Banker	121, Mooktaram Babu Street	ditto
Law, Satish Chandra	Cashier, Chartered Bank of India, Australia and China	1-1, Clive Street	ditto

No.	Names.	Style or calling.	Residence or place of business.	Religion.
	Law, Tarini Charan	Partner, Kristodas Law & Co	63, Radhabazar Street	Hindu
	Lekhraj	Auditor, Chief Auditor's Office, E I R	E I R House	ditto
	Lohia, Keshab Deo	Landholder	35-1, Hari Ghose Street	ditto
	M			
	Mahalanabis, Prashanta Chandra, BSc, MA (Cantab).	Professor, Presidency College	86-1, College Street	Brahmo
	Mahanty, Purna Chandra, MSc	Lecturer, University College	92, Upper Circular Road	Hindu
	Mahindra, Hem Chandra, BA (Oxon)	Assistant, Burmah Shell Co of India, Ltd	Hong Kong House	ditto
	Mahindra, Kailash Chandra	Partner, Martin & Co	12, Mission Row	ditto
	Mahomed, Sanaullah, MA	Professor, Presidency College	86-1, College Street	Mahomedan
	Mahomed, Yar Mahomed, BA	Audit Inspector, Calcutta Corporation	Municipal Office	ditto
	Maitra, Ashutos, MA	Demonstrator, Presidency College	86-1, College Street	Hindu
	Maitra, Jagadish Chandra	Sub-Station Superintendent, C E S C, Ld	Victoria House	ditto
	Maitra, Manmohan, BSc (Vic)	Junior City Architect, Calcutta Corporation	Municipal Office	Brahmo
	Maitra, Nalini Kanta, MA	Assistant, Martin & Co	12, Mission Row	Hindu

Maitra, Somnath	Professor, Presidency College	86-1, College Street	ditto
Maitra, Sushil Kumar, MA, PhD	Lecturer, University College	Senate House	ditto
Maity, Haripada, MA	Lecturer, University College	Senate House	ditto
Majumdar, Anil Kumar, MSc	Demonstrator, St Xavier's College	30, Park Street	ditto
Majumdar, B	Director, Enterpriser's Organisation, Ld	14, Clive Street	ditto
Majumdar, B B	Secretary, Metropolitan Insurance Co, Ld	28, Pollock Street	ditto
Majumdar, Benjamin Upendranath	Superintendent, Central Forms Store	166, Dharamtala Street	Christian
Majumdar, Bhabendra Nath, BE	Executive Engineer, Public Health Deptt, Bengal	3, Charnock Place	Hindu
Majumdar, Charu Chandra, BL	Head Assistant, Health Office, Calcutta Corporation	Municipal Office	ditto
Majumdar, Dwijendra Kumar, MA	Demonstrator, Presidency College	86-1, College Street	ditto
Majumdar, Girija Prasanna	Professor, Presidency College	86-1, College Street	ditto
Majumdar, H N	Accounts Officer, E I R	E I R House	ditto
Majumdar, Manibhusan	Agent, The New Bengal Bank, Ld	15, Clive Street	ditto
Majumdar, Mrinalkanti, BA	Overseer, Government of India Press	8, Hastings Street	ditto
Majumdar, Nagendra Nath, MA, BT	Head Master, Hindu School	College Square	ditto
Majumdar, Nani Gopal, MA, FRASB	Superintendent, Archl. Section, Eastern Circle	Indian Museum	ditto
Majumdar, N K	Registrar of Joint Stock Companies, Bengal	Treasury Buildings	ditto
Majumdar, Nripendranath	Director of Programmes, All-India Radio	1, Garstin Place	ditto
Majumdar, Pramadacharan	Professor, Bangabasi College	25-1, Scott Lane	ditto
Majumdar, Pramada Nath, BL	Assistant Manager, Bengal Central Bank, Ld	86, Clive Street	ditto
Majumdar, S C	Superintending Engineer, S W Circle, P W D	Treasury Buildings	ditto
Majumdar, Surendra Chandra	Professor, Presidency College	86-1, College Street	ditto

No.	Names.	Style or calling.	Residence or place of business.	Religion.
	Majumdar, Suresh Chandra	Director, *Ananda Bazar Patrika*, Ld	1, Burman Street	Hindu
	Mallik, Anath Nath	Landholder	4, Outram Street	ditto
	Mallik, Des Raj	Assistant Audit Officer, Chief Auditor's Office, E I Ry	E I R House	ditto
	Mallik, Dinendra (Kumar)	Landholder	Marble Palace, 46, Mooktaram Babu Street.	ditto
	Mallik, Ganesh Chandra (Kumar)	Landholder	25, Debendra Mallik Street	ditto
	Mallik, Gourcharan (Kumar)	Landholder	25, Debendra Mallik Street	ditto
	Mallik, Indra Chandra	Partner, Bengal Paint Supply Co	16, Bonfields Lane	ditto
	Mallik, Jatindramohan	Landholder	24, Darponarain Tagore Street	ditto
	Mallik, Jitendra Nath	Landholder	Marble Palace, 46, Mooktaram Babu Street	ditto
	Mallik, Jnanendranath	Landholder	18, Radhanath Mallik Lane	ditto
	Mallik, Kartic Churn (Kumar)	Director, Bengal Bonded Warehouse Association	102, Clive Street	ditto
	Mallik, Krishnapada, MSc	Demonstrator, St Xavier's College	30, Park Street	ditto
	Mallik, Madan Mohan	Landholder	365, Upper Chitpore Road	ditto
	Mallik, Manick Lal	Zamindar	123, Grey Street	ditto
	Mallik, P	Proprietor, P Mallik & Co	81, Clive Street	ditto
	Mallik, P, MA	Director, Bharat Electric Bulb Works, Ld	2, Lyons Range	ditto
	Mallik, P C, BSc	Partner, Bengal Publicity Co	Stephen House	ditto
	Mallik, Pannalal	Landholder	26-1, Prasanna Kumar Tagore Street	ditto
	Mallik, Pradyumna K	Landholder	7, Prasanna Kumar Tagore Street	ditto
	Mallik, R N, BA	Assistant, P K Ghose & Co	100, Clive Street	ditto

Mallik, Shailendra Nath	Landholder	18, Radhanath Mallik Lane	ditto
Mallik, Shibdas	Landholder	34, Durponarain Tagore Street	ditto
Mallik, Tarak Nath	Landholder	364, Upper Chitpore Road	ditto
Mallik, Uditendu Prakash, BE, CE	Proprietor, Hope Johnstone & Sons	9, Hastings Street	ditto
Mandal, Anil Kumar, MA	Lecturer, Scottish Church College	4, Cornwallis Square	Christian
Mandal, Baidyanath, BSc	Proprietor, B N Mandal & Co	22, Canning Street	Hindu
Mandal, Bibhuti Bhusan, MSc	Professor, Scottish Church College	4, Cornwallis Square	ditto
Mandal, D N, MA	Professor, St Paul's Cathedral College	33-1, Amherst Street	Christian
Mandal, Hrit Kumar, MA	Principal, Collin's Institute	140, Dharamtala Street	ditto
Mandal, J C, MA	Professor, St Paul's Cathedral College	33-1, Amherst Street	Hindu
Mandal, Trivangamurari, MSc	Professor, Vidyasagar College	39, Shankar Ghose Lane	ditto
Mandaneswara, Sri, MA	Probationary Accounts Officer, E B R	3, Koilaghat Street	ditto
Marik, Tarapada	Assistant Engineer, City Division, P W D	Writers' Buildings	ditto
Master, N F, ASAA	Accountant	265, Bowbazar Street	Zoroastrian
Mathur, K, BL	Deputy Chief Engineer, Chief Engineer's Office, E I R	E I R House	Hindu
Maulik, Ramendra	Superintendent, Corporation Press	Municipal Office	ditto
Medora, Nariman Maneckjee, BA	Acting Branch Manager, British India General Insurance Co, Ld	2, Old Court House Corner	Zoroastrian
Mehra, Desraj	Manager, Punjab National Bank, Ld	135-36, Canning Street	Hindu
Mehta, Gagan Bihari Lallubhai, MA	Manager, Scindia Steam Navigation Co, Ld	100, Clive Street	ditto
Mehta, Gulab Chand Baid	Staff Assistant, Imperial Bank of India	3, Strand Road	Jain
Mehta, Hiralal	Landholder	25, Pollock Street	Hindu
Mehta, Pherojsha Merwanji Nanabhai	Proprietor, M N Mehta & Co	65, Ezra Street	Zoroastrian

No.	Names.	Style or calling.	Residence or place of business.	Religion.
	Menon, C T N, BA	Superintendent, Commercial Intelligence Department	1, Council House Street	Hindu
	Mian, Moyenuddin	Head Assistant, Bengal Secretariat, P W D	Writers' Buildings	Mahomedan
	Mitra, Akshaya Kumar	Treasurer, Calcutta Corporation	Municipal Office	Hindu
	Mitra, Animendra Krishna	Landholder	20-B, Nilmani Mitter Street	ditto
	Mitra, Ashutos Chandra	Landholder	13, Beadon Street	ditto
	Mitra Basanta Kumar	Landholder	34, Shampukur Street	ditto
	Mitra, Bijaya Krishna	Manager, Caledonia Brush Works	10-B, Nimtolla Ghat Street	ditto
	Mitra, Charu Gopal	Head Assistant, Central Stationery Office	3, Church Lane	ditto
	Mitra, Durgapada, BA	Manager, R Laugin & Co	148, Bow Bazar Street	ditto
	Mitra, G K	Director, Kuver Ld	84, Clive Street	ditto
	Mitra, Gopendra Nath, Mech E (Leeds)	Landholder	14-1, Bechu Chatterjee Street	ditto
	Mitra, Gopi Krishna	Asstt Engineer, Bengal Telephone Corporation, Ld	8, Hare Street	ditto
	Mitra, Hiran Kumar	Landholder	1, Jhamapukur Lane	ditto
	Mitra, Jatishchand	Landholder	7-5, Beadon Street	ditto
	Mitra, Jiban Krishna	Landholder	2, Raja Rajballav Street	ditto
	Mitra, Jitendra Krishna	Cashier, P & O Banking Corporation, Ld	1, Fairlie Place	ditto
	Mitra, Jnanendra Kumar, BE	Building Surveyor, Calcutta Corporation	Municipal Office	ditto
	Mitra, Jyotirbikas, MA	Head Master, Saraswati Institution	62, Shampukur Street	ditto
	Mitra, Kali Shankar	Engineer and Contractor	48, Raja Naba Kissen Street	ditto

Mitra, Kumar	Deputy Superintendent, Jetty and Wharves, Port Commissioners'	Strand Road	ditto
Mitra, Kumar Krishna	Landholder	14, Ahiritola Street	ditto
Mitra, Lalit Mohan	Assistant, Andrew Yule & Co, Ld	8, Clive Row	ditto
Mitra, Manabendra Kissen	Merchant and Landholder	19, Nilmoni Mitter Street	ditto
Mitra, Manmatha Nath, MA	Head Assistant, Board of Revenue, Bengal	Writers' Buildings	ditto
Mitra, Nirmal Chandra, MSc	Secretary and Head Master, Mitra Institution	55, Harrison Road	ditto
Mitra, Nirmal Chandra, MA	Professor, St Xavier's College	30, Park Street	Christian
Mitra, Paresh Chandra, BSc (Eng)	Proprietor, P C Mitra & Co	20, British Indian Street	Hindu
Mitra, Paritosh, MSc	Accountant, Calcutta Corporation	Municipal Office	ditto
Mitra, P C	Asstt Secretary, Port Commissioners' Office	Strand Road	ditto
Mitra, Prafulla Chandra, MA, PhD	Professor, University College	92, Upper Circular Road	ditto
Mitra, Prafulla Chandra, BA	Extra Asstt Superintendent (Drawing), Survey of India	13, Wood Street	ditto
Mitra, Prakash Krishna	Manager, J K Mitter & Co	2, Lyons Range	ditto
Mitra, Pramatha Nath	Sr Accountant, American Express Co. Inc	14, Government Place, East	ditto
Mitra, Pravas Chandra	Partner, Mitra & Chaudhuri	103, Clive Street	ditto
Mitra, Pravat Kumar	Landholder	2, Loudon Street	ditto
Mitra, Satish Chandra	Partner, Mitra & Chaudhuri	103, Clive Street	ditto
Mitra, Satya Charan	Landholder	32, Manicktala Street	ditto
Mitra, Satish Chandra, BSc (Eng)	Deputy Director of Industries, Bengal	40-1A, Free School Street	ditto
Mitra, S C, MA	Secretary, Indian Mutual Life Association, Ld	8-2, Hastings Street	ditto

No.	Names.	Style or calling.	Residence or place of business.	Religion.
	Mitra, Shailendra Nath, MA	Lecturer, University College	Senate House	Hindu
	Mitra, Shanti Kumar, MA	Professor, Scottish Church College	4, Cornwallis Square	ditto
	Mitra, Sharat Chandra	Landholder	34, Shampukur Street	ditto
	Mitra, Shishir Kumar, DSc	Professor, University College	92, Upper Circular Road	ditto
	Mitra, S K, MA	Partner, S K Mitter & Co	84-A, Clive Street	ditto
	Mitra, S N, BSc, B Com, ACA	Accountant	1, Grants Lane	ditto
	Mitra, S N	Superintendent, C A O's Office, E I R	E I R House	ditto
	Mitra, S R, BA	Partner, Mitra Banerjee & Co	7, Lyons Range	ditto
	Mitra, Subodh Chandra	Cashier, Imperial Chemical Industries (India), Ld	18, Strand Road	ditto
	Mitra, Sudhangshu Bhusan	Mang Director, India Equitable Insurance Co	102, Clive Street	ditto
	Mitra, Suhrit C, MA, PhD	Lecturer, University College	Senate House	ditto
	Mitra, Surendra Nath	Landholder	65-4, College Street	ditto
	Mitra, Sushil Chandra, MA, DLitt	Director, "Vichitra"	27-1, Faria Pukur Street	ditto
	Mitra, Tinkari	Executive Engineer, City Divn, P W D	Writers' Buildings	ditto
	Moddi, C C	Resdt Branch Secretary, Allianz Und Stuttgarter Verein Insurance Co, Ld	7, Royal Exchange Place	ditto
	Modi, Maganlal, G	Assistant Manager, American Foreign Insurance Association	8, Clive Street	ditto
	Mohan, Anand	Assistant, Commercial Manager, E I R	E I R House	ditto
	Momin, Md. Abdul (Khan Bahadur), CIE	Director, Eastern Federal Union Insurance Co, Ld	9, Clive Street	Mahomedan

Motichand, Jeewanlal	Consulting Director, Jeewanlal (1929), Ld	11, Clive Street	Hindu
Mozaffaruddin, Syed (Maulvi), MA	Professor, Islamia College	8, Wellesley Street	Mahomedan
Mudaliar, Mahadeva Madras, MA	Officer in charge Drawing Survey of India	13, Wood Street	Hindu
Mukherji, A B	Superintendent, C A O's Office, E I R	E I R House	ditto
Mukherji, A K, PhD (Lond.)	Partner, Bengal Publicity Co	Stephen House	ditto
Mukherji, Amulyadhan, MA, BT	Sr Accountant, A G's Office, Bengal	Treasury Buildings	ditto
Mukherji, Anadi Nath	Head Cashier, Macneill & Co	2, Fairlie Place	ditto
Mukherji, Ananda Lal	Landholder	1-1E, Hurtuki Bagan Lane	ditto
Mukherji, Anath Nath	Secretary, Baghbazar Reading Library	65-2A, Raja Raj Bullav Street	ditto
Mukherji, Anil Chandra, MA	Sr Accountant, A G's Office, Bengal	Treasury Buildings	ditto
Mukherji, Ardhendu Bhusan, MA, BL	Assistant Manager, Bengal Provincial Co-operative Bank, Ld	Writers' Buildings	ditto
Mukherji, Asoke Jiban	Auditor, C A's Office, E I R	E I R House	ditto
Mukherji, Benoy Kumar, M.Sc	Demonstrator, St Xavier's College	30, Park Street	ditto
Mukherji, Bhaskar, BSc, BA (Cantab)	Special Officer, Calcutta Corporation	Municipal Office	ditto
Mukherji, Bholanath, MA	Professor, Scottish Church College	4, Cornwallis Square	ditto
Mukherji, Bibhuti Bhusan	General Secretary, East and West Insurance Co, Ld	37, Strand Road	ditto
Mukherji, Bijali Kumar	Partner, Ramlal Mookerjee & Son	41, Strand Road	ditto
Mukherji, Bijaya Kumar	Partner, Ramlal Mookerjee & Son	41, Strand Road	ditto
Mukherji, Birendra Nath	Partner, Martin & Co	12, Mission Row	ditto
Mukherji B N, BCom, GDA	Auditor	64, Sitaram Ghose Street	ditto

No.	Names.	Style or calling	Residence or place of business.	Religion.
	Mukherji, B P	Director, Holmes, Wilson & Co, Ld	Norton Buildings	Hindu
	Mukherji, C P, B A, A S A A (Lond)	Officer, Hindusthan Co-operative Insurance Society, Ld	Hindusthan Buildings	ditto
	Mukherji, Dhirendra Nath, MA	Professor, City College	102-1, Amherst Street	ditto
	Mukherji, Dhirendra Nath, MA	Professor, St Xavier's College	30, Park Street	ditto
	Mukherji, Dhirendra Nath	Partner, A C Banerjee & Co	3-1, Bankshall Street	ditto
	Mukherji, Dwijapada	Sr Accountant, A G's Office, Bengal	Treasury Buildings	ditto
	Mukherji, Dwijendra Nath	Assistant, Martin & Co	12, Mission Row	ditto
	Mukherji, Dwijendra Nath	Director, Great Eastern Exchange, Ld	29, Park Street	ditto
	Mukherji, Gokul Krishna, BA	Assistant Treasurer, Calcutta Corporation	Municipal Office	ditto
	Mukherji, H	Managing Proprietor, Search-Light Clearing Agency	19, Strand Road	ditto
	Mukherji, Harendra Kumar, PhD	Professor, Calcutta University	Senate House	Christian
	Mukherji, Hemanta Kumar	Secretary, Y M C A, College Branch	86, College Street	ditto
	Mukherji, Hem Chandra	Proprietor, Hem Chandra Mukherji & Sons	47/1, Bechu Chatterji Street	Hindu
	Mukherji, Hiralal	Sub-Accountant, Imperial Bank of India	Strand Road	ditto
	Mukherji, Jatindra Nath	Partner, The Eastern Merchants	14, Old Court House Lane	ditto
	Mukherji, Jatindra Nath, MA	P A to Assessor, Calcutta Corporation	Municipal Office	ditto
	Mukherji, Jatish Chandra	Merchant	43, Beadon Street	ditto
	Mukherji, Jitendra Nath	Partner, Martin & Co	12, Mission Row	ditto
	Mukherji, J N	Partner, The Eastern Merchants	14, Old Court House Lane	ditto
	Mukherji, Jnanendra Nath, DSc	Professor, University College	92, Upper Circular Road	ditto

Mukherji, Jogesh Chandra, MA	Lecturer, University College	92, Upper Circular Road	ditto
Mukherji, Kamal Krishna, BSc, BE	Engineer, T N Banerjea, Ld	6, Hastings Street	ditto
Mukherji, Kamal Krishna, MA	Assistant Head Master, Metropolitan Institution (Main)	39, Sankar Ghose Lane	ditto
Mukherji, K C	Chemist, Hoyle, Robson, Barnett & Co (India), Ld	Tower House	ditto
Mukherji, K P	Auditor, C A's Office, E I R	E I R House	ditto
Mukherji, Krishna Gopal	Partner, Calcutta Supply Agency	8, Canning Street	ditto
Mukherji, Makhan Lal, MA, BL	Accountant, Central Bank of India, Ld	100, Clive Street	ditto
Mukherji, Makhan Lal	Director, Calcutta Insurance, Ld	86, Clive Street	ditto
Mukherji, Manmatha Nath	P. W. Sr Accountant, A G's Office, Bengal	Treasury Buildings	ditto
Mukherji, Manmatha Nath	Director, Calcutta Insurance, Ld	86, Clive Street	ditto
Mukherji, M N	Director, Bengal Central Bank, Ld	86, Clive Street	ditto
Mukherji, M N	Engineer	12, Old Post Office Street	ditto
Mukherji, N, BA	Proprietor, Art Press	20, British Indian Street	ditto
Mukherji, Nagendra Nath, MSc	Professor, St Xavier's College	30, Park Street	ditto
Mukherji, Nagendra Nath	Assistant Assessor, Calcutta Corporation	Municipal Office	ditto
Mukherji, N G	Partner, General Engineering Co	25-B, Swallow Lane	ditto
Mukherji, Panchanan	Head Assistant, L. S.-G. Branch, Bengal Secretariat	Writers' Buildings	ditto
Mukherji, Peari Mohan	Proprietor and Manager, Universal Trading Union	9, Dalhousie Square	ditto
Mukherji, Phanindra Nath	Landholder	33-1, Beadon Street	ditto
Mukherji, Purnendu Nath, BSc	Assistant Chemical Examiner to the Govt of Bengal	Medical College	ditto
Mukherji, Rabin	Assistant, Martin & Co	12, Mission Row	ditto
Mukherji, Ram Chandra	Superintendent, Traffic Office, Martin & Co	12, Mission Row	ditto

No.	Names.	Style or calling.	Residence or place of business.	Religion.
	Mukherji, Ramoni Nath	Cashier, Martin & Co	12, Mission Row	Hindu
	Mukherji, Sadhan Gopal	Partner, Calcutta Supply Agency	8, Canning Street	ditto
	Mukherji, Santosh Kumar	Sr Accountant, A G's Office, Bengal	Treasury Buildings	ditto
	Mukherji, Satish Chandra	Assistant, Gillanders Arbuthnot & Co	8, Clive Street	ditto
	Mukherji, Satkari, MA, PhD	Lecturer, University College	Senate House	ditto
	Mukherji, S C, BA, GD, ARC, AIIA	Architect	8-2, Hastings Street	ditto
	Mukherji, Shachindranath, BA, LLB	Accountant, Martin & Co	12, Mission Row	ditto
	Mukherji, Shishir Kumar	Sr Accountant, A G's Office, Bengal	Treasury Buildings	ditto
	Mukherji, Shital Chandra, MSc	Accountant, Army Factory Accounts	6, Esplanade, East	ditto
	Mukherji, Shripada	Accountant, Army Factory Accounts	6, Esplanade, East	ditto
	Mukherji, S K	Asstt District Traffic Superintendent, E B R	3, Koilaghat Street	ditto
	Mukherji, S K, GDA, RA	Auditor	12, Old Post Office Street	ditto
	Mukherji, S N, FSAA	Incorporated Accountant	1-B, Old Post Office Street	ditto
	Mukherji, Subodh Kumar, BE	Building Surveyor, Calcutta Corporation	Municipal Office	ditto
	Mukherji, Sudhanath, BL	Assistant Registrar, Calcutta University	Senate House	ditto
	Mukherji, Surendra Nath	2nd Grade Assistant, Imperial Bank of India	Strand Road	ditto
	Mukherji, Suresh Chandra, BA	Officiating Accountant, D A-G P and T Office	7, Koilaghat Street	ditto
	Mukherji, Sushil Kumar	Partner, Jardine Menzies & Co	14, Hare Street	ditto
	Mukherji, Sushil Kumar	Proprietor, W C Mukherji & Co	37, Canning Street	ditto
	Mukherji, Tarak Nath, MA	Professor, Ripon College	24, Harrison Road	ditto

Mukherji, Tarapada, MA	Professor, Presidency College	86-1, College Street	ditto
Mukherji, Tarapada, MA	Professor, Vidyasagar College	39, Shankar Ghose Lane	ditto
Mukherji, Tulsi Charan, MA	Senior Auditor, E B R	3, Koilaghat Street	ditto
Muktadir, Syed Abdul	Supervisor, Drainage, Calcutta Corporation	Municipal Office	Mahomedan
Musa, Mahammad (Khan Bahadur), MA	Principal, Calcutta Madrassah	Wellesley Square	ditto
Musa, Mahammad	Manager, Star of India	3, Wellesley Place	ditto

N

Nag, Kalidas, MA, DLitt	Lecturer, University College	Senate House	Brahmo
Nahar, Bijaya Sing	Landholder	48, Indian Mirror Street	Hindu
Nahar, Bikram Singh	Landholder	50, Indian Mirror Street	ditto
Nahar, Kesri Sing	Landholder	26, Indian Mirror Street	ditto
Nahar, P S	Landholder	26, Indian Mirror Street	ditto
Naidu, S L R	Personnel Officer, E B R	3, Koilaghat Street	ditto
Naik, K M, GDA	Director, National Fire and General Insurance Co, Ld	7, Council House Street	ditto
Nan, Sudhir Chandra, BA	Merchant	18, Bethune Row	ditto
Nanavaty, Dady N C	Sub-Agent, Central Bank of India, Ld	100, Clive Street	Zoroastrian
Nandi, A C	Assistant Accounts Officer, E I R	E I R House	Hindu

No.	Names.	Style or calling.	Residence or place of business.	Religion.
	Nandi, Akshay Kumar	Proprietor, Nandy Brothers	34, Dharamtola Street	Hindu
	Nandi, Durgapada	Accountant, W W Department, Calcutta Corporation	Municipal Office	ditto
	Nandi, H D	Secretary, Indian Cycle Traders' Association	50-6, Dharamtala Street	ditto
	Nandi, K D	Managing Director, Great Indian Motor Works, Ld	12, Government Place, East	ditto
	Nandi, Kristo Lal, MA	Officiating Accountant, D A-G P and T Office	7, Koilaghat Street	ditto
	Nandi, Nalin Bihari	Secretary, George O Penn (India), Ld	22, Chowringhee	ditto
	Nandi, N D, BE, AMIE	Engineer	79-24B, Lower Circular Road	ditto
	Nandi, P K	Assistant Valuer, Calcutta Improvement Trust	5, Clive Street	ditto
	Nandi, Prafulla, MA (Cantab), BSc, ACA	Chartered Accountant	6, Hastings Street	ditto
	Nandi, Praphulla Ch, BSc (Cal), MA(Cantab)	Professor, Vidyasagar College	39, Shankar Ghose Lane	ditto
	Nandi, Shambhu Nath	Landholder	37, Hari Ghose Street	ditto
	Nandi, S N	Assistant Engineer, Port Commissioners' Office	Strand Road	ditto
	Nandi, Tarini Charan	Landholder	2-B, Shankar Ghose Lane	ditto
	Narielwala, M B, BA, LLB	Law Officer, Central Bank of India, Ld	100, Clive Street	Zoroastrian
	Nazir, S S	Branch Secretary, Oriental Govt Security Life Assurance Co, Ld	2, Clive Row	ditto
	Nazir, Shaikh Mohammed, BSc (Pun)	Assistant Engineer, Indian Stores Department (Inspection)	6, Esplanade East	Mahomedan
	Nevatia, S N	Managing Director, Anglo-American Oil Products Co (India), Ld	Stephen House	Hindu
	Nigam, Onkarnath	Partner, Central India Machine Co	155, Dharramtala Street	ditto

Nigam, Srishtinath	Partner, Central India Machine Co	155, Dharamtala Street	ditto
Niyogi, Anil Chandra, BA	Landholder	1-2, Kaliprasad Chakravarti Street	ditto
Niyogi, Kumudini Mohan	News Editor, Associated Press of India	7, Hare Street	ditto
Niyogi, Panchanan, MA, PhD	Professor, Presidency College	86-1, College Street	ditto
Niyogi, Phanindra Chandra	Landholder	1-2, Kaliprasad Chakravarti Street	ditto
Niyogi, Pravat Chandra, BE	Executive Engineer, Suburban Division, P W D	Writers' Buildings	ditto

O

Ojha, Amritlal, MA MIME, FRSA (Lond)	Director National Cement Mines & Industries, Ld	10, Clive Row	Hindu

P

Pal, Ashutos, MSc	Assistant, Martin & Co	12, Mission Row	Hindu
Pal, Bholanath, MSc	Professor, St Xavier's College	30, Park Street	ditto
Pal, Durgacharan	Head Assistant, Bengal Secretariat, Police Department	Writers' Buildings	ditto
Pal, Gopeshwar, MSc	Lecturer, University College	Senate House	ditto
Pal, Hari Shankar (Sir), KT	Proprietor, Butto Kristo Paul & Co	30, Sovabazar Street	ditto
Pal, Hemendra Chandra	Director, Indian Economic Insurance Co, Ld	15, Clive Street	ditto
Pal, Jahar Lal	Partner, A B D R & Co	25-B, Swallow Lane	ditto
Pal, Jyotish Chandra	Auditor, W W Extension, Calcutta Corporation	Municipal Office	ditto
Pal, Jyotish Chandra, MA	Professor, St Xavier's College	30, Park Street	ditto

No.	Names.	Style or calling.	Residence or place of business.	Religion.
	Pal, Netai Charan	Director, Glory of the East Insurance Co, Ld	1, Bonfields Lane	Hindu
	Pal, Satyendra Nath	Landholder	53, Mirzapore Street	ditto
	Pal, U N	Manager, Indian Economic Insurance Co, Ld	15, Clive Street	ditto
	Pal Chaudhuri, Girija Nath, BA (Rai Bahadur)	Manager, Nadia Engineering Co	79-B, Lower Circular Road	ditto
	Pal Chaudhuri, Krishnaballabh, MA, ACA	Chief Accountant, Karam Chand Thapar & Bros, Ld	5, Royal Exchange Place	ditto
	Palit, Panchanan	Secretary, Paul & Chakravarty, Ld	83, Old China Bazar Street	ditto
	Paranandi, Suryanarain, BA	Secretary, Karam Chand Thapar & Bros, Ld	5, Royal Exchange Place	ditto
	Patel, Y R	Branch Manager, New India Assurance Co, Ld	100, Clive Street	ditto
	Patney, Desh Raj	Staff Assistant, Imperial Bank of India	3, Strand Road	ditto
	Pathak, P J	General Manager & Director, Jeewanlal (1929), Ld	101, Clive Street	ditto
	Pathak, S K	Director, Mutual Indemnity & Finance Corpn. (India), Ld	10, Government Place	ditto
	Patra, Satya Charan	Accountant, D A-G, P and T Office	7, Koilaghat Street	ditto
	Poddar, Hanuman Prasad	Merchant	10, Chittaranjan Avenue	ditto
	Poddar, R P	Merchant	5, Lord Sinha Road	ditto
	Powvala, Maneck Kawasji, MA, LLB	Assistant Sales Manager, Tata Iron and Steel Co, Ld	100, Clive Street	Zoroastrian
	Pramanick, Haridas	Assistant Audit Officer, E B R	3, Koilaghat Street	Hindu
	Primlani, M H	Partner, Oxford Book and Stationery Co	17, Park Street	ditto

Primlani, S H, BA	Partner, Oxford Book and Stationery Co	17, Park Street	ditto
Puri, D C	Asstt Branch Secretary, Oriental Govt Security Life Assurance Co, Ld	2, Clive Row	ditto
Puri, Gur Charan Das	Staff Officer, Imperial Bank of India	3, Strand Road	ditto
Puri, Nand Lal, BA, LLB	Agent, Central Bank of India, Ld	100, Clive Street	ditto
Purohit, K J, FSAA	Partner, Batliboi & Purohit	6, Hastings Street	ditto
Pyne, Satyendra Lal, MA, BL	Asstt Accountant-General, Bengal	Treasury Buildings	ditto

Q

Quadir, Anwarul (Khan Sahib) (Maulvi) MA	2nd Inspector of Schools, Presidency Division	40-1A, Free School Street	Mahomedan

R

Rafique, Mohamad	Resident	19, Zakariah Street	Mahomedan
Rahman, Z A	Merchant	11, Colootolla Street	ditto
Rajabally, Nurmahomed	Supervisor, Adamjee Hajee Dawood & Co, Ld	4, Dalhousie Square, East	ditto
Rajagopalan, Annasamy Iyengar BA	P A to A R Dalal, Tata Sons Ld	100, Clive Street	Hindu
Rajagopalan, R, BA	Auditor, C A's Office, E I R	E I R House	ditto
Rajgarhia, Babulall	Landholder	13, Syed Salley Lane	ditto
Rajgarhia, Ramprasad	Governing Director, Rajgarhia Brothers, Ld	161, Muktaram Babu Street	ditto
Rakshit, Narendra Nath, MSC	Offg Accountant, D A-G, P & T Office	7, Koilaght Street	ditto
Ram, Beli	Superintendent, Explosives Office	1, Council House Street	ditto
Ramanujan, N V	Accountant, D A-G, P & T Office	7, Koilaghat Street	ditto

No.	Names.	Style or calling.	Residence or place of business.	Religion.
	Ram, Chandra (II), BA	Accountant, D A-G, P & T Office	7, Koilaghat Street	Hindu
	Ramachandran, T N, MA	Assistant Superintendent, Archl Survey, Eastern Circle	Indian Museum	ditto
	Rangachari, M V, MA	Superintendent, Office of the Controller of Currency	Treasury Buildings	ditto
	Rangaswami, M S, BA	Accountant, E B R	3, Koilaghat Street	ditto
	Rao, Gundabattula Narsinga	Manager, Foundry & Railway Equipment Co	100, Clive Street	ditto
	Rao, J Ram, MA	Probationary Accounts Officer, E B R	3, Koilaghat Street	ditto
	Rao, Katre Seshagiri, MA	Examiner of Patents	1, Council House Street	ditto
	Rao, P Mohan	Chief Accounts Officer, E I R	E I R House	ditto
	Rao, V R Venkataramana	Manager, J B Advani & Co, Ld	104. Old China Bazar Street	ditto
	Rashid, K A	Accountant, C A O's Office, E I R	E I R Honsa	Mahomedan
	Rasul, Ghulam, BA	Dy Asstt Controller, Army Factory Accounts	6, Esplanade, East	ditto
	Ray, A, BA	Associate Editor, Calcutta Commercial Gazette	2, Royal Exchange Place	Hindu
	Ray, Abani Bhusan, BA	Landholder	20, Hara Chandra Mullick Lane	ditto
	Ray, Ajit Kumar, BL	Manager, Bengal Central Bank, Ld	86, Clive Street	ditto
	Ray, Alauddin	Asstt Engineer, Inspection, Indian Stores Deptt	6. Esplanade, East	Mahomedan
	Ray, A M, MA, BCom	Accountant	1 & 2, Old Post Office Street	Hindu
	Ray, Amiya Nath, ACA	Partner, Ray & Ray	6, Church Lane	Brahmo

Ray, Anil Chandra, BA	Agency Manager, Hindu Mutual Life Assurance, Ltd	309, Bowbazar Street	Hindu
Ray, Anil Krishna, BE	Building Surveyor, Calcutta Corporation	Municipal Office	ditto
Ray, A P	Assistant, McLeod & Co	28, Dalhousie Square	ditto
Ray, Ashutos	Zamindar	36, Panchanan Ghose Lane	ditto
Ray, B	Manager, General Assurance Society, Ld	8, Esplanade, East	ditto
Ray, Bankim Ch, MA	Officer, Hindusthan Co-operative Insurance Society, Ld	Hindusthan Buildings	ditto
Ray, Bankim Chandra, BSC	Lighting Superintendent, Calcutta Corporation	Hogg Street	ditto
Ray, Bankim Chandra, MSC	Lecturer, University College	92, Upper Circular Road	ditto
Ray, Bankim Chandra, BA	Partner, N L Ray & Co	7, Lyons Range	ditto
Ray, Basanta Kumar, BA	Accountant, E B R	3, Kaylaghat Street	ditto
Ray, Bhupendra Nath	Sr Accountant, A G's Office, Bengal	Treasury Buildings	ditto
Ray, Bhusan Chandra, MA	Head Master, Oriental Seminary	336, Upper Chitpur Road	ditto
Ray, Bidhu Bhusan, DSC	Lecturer, University College	92, Upper Circular Road	ditto
Ray, Bijaya Kumar, MA	Lecturer, Ripon College	24, Harrison Road	ditto
Ray, Birendra Binode, MA	Professor, Scottish Church College	4, Cornwallis Square	ditto
Ray, Bishnuprasad (*Kumar*)	Landholder	24-1, Darmahatta Street	ditto
Ray, Biswanath (Kumar)	Director, Glory of the East Insurance Co, Ltd	25-B, Swallow Lane	ditto
Ray, B K, BSC, GDA, BA	Registered Accountant	17, Mangoe Lane	ditto
Ray, B K	Partner, K Ray & Brothers	6, Hastings Street	ditto
Ray, B N	Partner, K Ray & Brothers	6, Hastings Street	ditto
Ray, Bratishankar, MSC, PhD	Lecturer, Calcutta University	92, Upper Circular Road	ditto
Ray, Debendra Nath, MA	Lecturer, Bethune College	181, Cornwallis Street	ditto
Ray, Dhirendra Nath	Ex. Engineer, Hijli Division, P W D	Writers' Buildings	ditto

No.	Names.	Style or calling.	Residence or place of business.	Religion.
	Ray, Gouri Shankar	Accountant, Sonar Bangla Bank, Ld	137, Canning Street	Hindu
	Ray, Gunendra Krishna	Landholder	102-3-A, Beniatola Street	ditto
	Ray, Haimaja Ranjan, BE	Constructional Assistant to C A, Calcutta Corporation	Municipal Office	ditto
	Ray, Harendra Nath, MSc, PhD	Lecturer, University College	92, Upper Circular Road	ditto
	Ray, Hem Chandra, MA, PhD	Lecturer, University College	Senate House	ditto
	Ray, Jatindra Nath	Director, Great Eastern Hotel, Ld	1, 2 & 3, Old Court House Street	ditto
	Ray, Jitendra Nath	Managing Agent, East India Cotton Mills	120, Darmahatta Street	ditto
	Ray, K, BSc, CPE (Glas)	Engineer, K Ray & Bros	6, Hastings Street	ditto
	Ray, Kalidas	Sr Accountant, A G B's Office	Treasury Buildings	ditto
	Ray, Kshirode Gopal	Managing Director, Standard Engineering Co, Ld	103, Bow Bazar Street	ditto
	Ray, Kumud Bandhu, MA	Lecturer, University College	Senate House	ditto
	Ray, Kumud Shankar (Dr)	Director, East India Insurance Co, Ld	10, Clive Street	ditto
	Ray, Lalit Chandra, MA	Senior Accountant, Telegraph Check Office	33, Dalhousie Square, South	ditto
	Ray, M N (Rai Bahadur), BSC, MRAS (Lond)	Estates Manager, C I Trust	5, Clive Street	ditto
	Ray, M N	Assistant Secretary, Calcutta Corporation	Municipal Office	ditto
	Ray, Manaranjan	Proprietor, S Ray & Co	11-1, Esplanade, East	ditto
	Ray, Milananda, BA	Head Assistant, Finance Deptt, Bengal Secretariat	Writers' Buildings	ditto

Ray, Muralidhar	Landholder	16, Banamali Sarkar Street	ditto
Ray, Nihar Ranjan, MA, PRS	Lecturer, Traning College for Teachers, Calcutta Corporation.	1, Wellington square	ditto
Ray, Nil Krishna	Landholder	2, Gopi Roy Lane	ditto
Ray, N K, MA, BL	Officer, Hindusthan Co-operative Insurance Society, Limited,	Hindusthan Buildings	ditto
Ray, N N, MA	Electrical Engineer	93-3-3B, Hari Ghose Street	ditto
Ray, Nripendra Krishna, MSc	Incorporated Accountant, N K Roy & Co	2, Lyons Range	ditto
Ray, Parimal, MA, PhD	Principal, Govt Commercial Institute	11, Hastings Street	ditto
Ray, Prafulla Kanta	Accountant, The Eastern Merchants	14, Old Court House Lane	ditto
Ray, Prabhat Chandra	Executive Engineer, Damodar Divn	Treasury Buildings	ditto
Ray, Pratap Chandra	Assistant Commercial Manager, E I R	E I R House	ditto
Ray, Priyada Ranjan, MA	Lecturer, University College	92, Upper Circular Road	ditto
Ray, Priyanath	Zamindar	102, Sovabazar Street	ditto
Ray, Pulin Krishna	Landholder	7, Abhoy Charan Mitter Street	ditto
Ray, Purna Chandra	Asstt Curator, Geological Survey of India	27, Chowringhee	ditto
Ray, Purna Chandra, MA, BL	Secretary and Director, Hindu Mutual Life Assurance, Ld	309, Bow Bazar Street	ditto
Ray, Radhika Bhusan (*Rai Bahadur*)	Director, Great India Insurance, Ld	14, Clive Street	ditto
Ray, Rajendra Narayan (*Kumar*)	Zamindar	79, Upper Chitpur Road	ditto
Ray, Rajes Kanta	Partner, The Eastern Merchants	14, Old Court House Lane	ditto

No.	Names.	Style or calling.	Residence or place of business.	Religion.
	Ray, Ramani Kanta, BA	Director, Great India Insurance, Ld	14, Clive Street	Hindu
	Ray, Ramani Mohan, MSc	Professor, Ripon College	24, Harrison Road	ditto
	Ray, Ramendra Nath	Zamindar	102, Sovabazar Street	ditto
	Ray, Ranajit, MA	Partner, Ray & Ray	6, Church Lane	Brahmo
	Ray, Sarojendra Nath, MA, PhD	Professor, City College	102-1, Amherst Street	ditto
	Ray, Satyananda, MA, PhD	Principal, Training College for Teachers, Calcutta Corporation	1, Wellington Square	Hindu
	Ray, Satyendra Nath	Head Assistant, Bengal Secretariat, Political Department	Writers' Buildings	ditto
	Ray, S C	Managing Director, Diana Engineering Co	31, Clive Street	ditto
	Ray, Shailaja Ranjan, MSc	Professor, Vidyasagar College	39, Shankar Ghose Lane	ditto
	Ray, Shyamendra Lal	Zamindar & Banker	53 A, Sovabazar Street	ditto
	Ray, S K, MEE	Director, Bengal Belting Works, Ld	14, Clive Street	ditto
	Ray, S K, BE, CE	Managing Director, Associated Engineers, Ld	14, Clive Street	ditto
	Ray, S N	Director, Diana Engineering Co	31, Clive Street	ditto
	Ray, Subinoy	Artist, Geological Survey of India	27, Chowringhee	Brahmo
	Ray, Suhas Chandra, MA	Lecturer, University College	Senate House	Hindu
	Ray, Sukhendra Kumar	Professor, Bangabasi College	25-1, Scott Lane	ditto

Ray, Suranjana, BA	Sr Accountant, Accountant-General's Office, Bengal	Treasury Buildings		ditto
Ray, Suresh Chandra	Director-in-charge (Cal Branch), The Bharat Insurance Co, Ld	Chittaranjan Avenue		ditto
Ray, T K, MSc	Elec Engineer, Calcutta Corporation	Municipal Office		ditto
Ray Chaudhuri, Bhupendra Narayan, MA	Director, The Guaranteed Relief Syndicate, Ld	14, Clive Street		ditto
Ray Chaudhuri, B N, MISE	Accountant, Sonar Bangla Bank, Ld	137, Canning Street		ditto
Ray Chaudhuri, Dwijendra Nath, MA	Professor, St Paul's Cathedral College	33-1, Amherst Street		ditto
Ray Chaudhuri, I N	Secretary, Sonar Bangla Bank, Ld	137, Canning Street		ditto
Ray Chaudhuri, Mahitos Kumar	Professor, Bangabasi College	25-1, Scott Lane		ditto
Ray Chaudhuri, Nalini Mohan, BA	Director, Sanyal Banerjee & Co, Ld	268-B, Bow Bazar Street		ditto
Ray Chaudhuri, Rabindra Nath (*Kumar*)	Landholder	9, Hungerford Street		ditto
Ray Chaudhuri, Satya Prasad, DSc	Lecturer, University College	92, Upper Circular Road		ditto
Ray Chaudhuri, Shachibilas	Partner, A B Patrika, Ld	2, Ananda Chatterjee Lane		ditto
Ray Chaudhuri, S K, MI, MA. MIAC, BA	Director, Sonar Bangla Bank, Ld	137, Canning Street		ditto
Ray Chaudhuri, Tarak Chandra, MA	Lecturer, Calcutta University	Senate House		ditto
Ray Chaudhuri, T K	Secretary and Accountant, Calcutta Improvement Trust	5, Clive Street		ditto
Rudra, Harendra Krishna	Landholder	1, Brindaban Bose Lane		ditto
Rudra, Manindra Nath, MSC	Lecturer, Bethune College	181, Cornwallis Street		ditto
Rudra, Narendra Nath, BSc (Cal) BSc Eng'g (Benares) MAE.	Member, Association of Engineers	2, Royal Exchange Place		ditto
S				
Sadeque, Abdus, MA	Professor, Islamia College	8, Wellesley Street		Mahomedan
Saha, Jagadish Ch	Partner, Messrs Adhar Ch Mahesh Ch Saha	9, Baista Set Street		Hindu

No.	Names.	Style or calling.	Residence or place of business.	Religion.
	Saha, Jogesh Lal, BSc	Partner, Ghose & Saha	1-B, Old Post Office Street	Hindu
	Saha, K M	Manager, Messrs Bhajahari Brindaban Ch Saha	1, Brajagobinda Saha Lane	ditto
	Saha, Matilal, BE	Asstt Assessor, Calcutta Corporation	Municipal Office	ditto
	Saha, Ranada Prasad	General Secretary, Bengal River Service Co, Ld	9, Clive Street	ditto
	Saha, Surendra Nath	Sr Accountant, A G's Office, Bengal	Treasury Buildings	ditto
	Sahay, Baijnath, BSc	Accountant, Army Factory Accounts	6, Esplanade, East	ditto
	Sahgal, Sital Prosad, MA	Manager, Mahabir Insurance Co, Ld	5, Royal Exchange Place	ditto
	Sahu Kar, Nariman D, BA	Manager, Godrej & Boyce Mfg Co, Ld	102, Clive Street	Zoroastrian
	Salamatullah, S (Maulvi), BA	Lecturer, Education Department, Calcutta Corporation	Municipal Office	Mahomedan
	Samaddar, Bhupal Bihari	Head Assistant, Bengal Secretariat, Education Department	Writers' Buildings	Hindu
	Samaddar, P K, MA, BT	Manager, Art Press	20, British Indian Street	ditto
	Samanta, Shailaja Kinkar, BSc (Engrg), BHV	Engineer, Krupp Indian Trading Co, Ld	22, Canning Street	ditto
	Sanyal, Dwijendra Kumar, MA, BCom	Secretary, Indian Mining Federation	15, Clive Street	ditto
	Sanyal, Hariprasad, MA	Agent, Central Bank of India, Ld	10 Lindsay Street	ditto
	Sanyal, Hiran Kumar, MA	Asstt Editor, Bengal Co-operative Organisation Journal	3-1, Bankshall Street	Brahmo
	Sanyal, Jatindra Mohan	Head Assistant, Central Forms Stores	166, Dharamtala Street	Hindu
	Sanyal, Manindra Kumar, BSc	Assistant Accounts Officer, A-G's Office, Bengal	Treasury Buildings	ditto
	Sanyal, N (Dr), MA, PhD (Lond)	Superintendent (Ag), Hindusthan Co-operative Insurance Society, Ld.	Hindusthan Buildings	ditto
	Sanyal, Narendra Nath, BSc	Dy Superintendent, Commercial Intelligence Department	1, Council House Street	ditto

Sanyal, P C	Welfare Officer, E B Ry	3, Koilaghat Street	ditto
Sanyal, Pramatha Chandra, MA	Proprietor, Bengal Stores Supply Co	57, Canning Street	ditto
Sanyal, S, BE	Manager, Willas Construction Co, Ld	19, Chowringhee	ditto
Sanyal, S N	Head Clerk, B I S N Co, Ld	8, Strand Road	ditto
Sanyal, Shachindra Narayan	Landholder	1, Rani Hemanta Kumari Street	ditto
Sarbadhikari, Dhirendra Nath, BE	Building Surveyor, Calcutta Corporation	Municipal Office	ditto
Sarkar, A K	Engineer & Contractor	4, Hastings Street	ditto
Sarkar, Amarendra Nath, BSc	Superintendent, Oriental Seminary	336, Upper Chitpur Road	ditto
Sarkar, A P	Landholder	7, Short Street	Brahmo
Sarkar, Arun Kumar, MA	Asstt Superintendent, C A O's Office, E I R	E I R House	Hindu
Sarkar, Balai Chand	Partner, Calcutta Supply Agency	8, Canning Street	ditto
Sarkar, Bansidhar, MSc	Professor, St Xavier's College	30, Park Street	ditto
Sarkar, Benoy Kumar, MA	Lecturer, University College	Senate House	ditto
Sarkar, Bijali Bihari, DSc	Lecturer, University College	92, Upper Circular Road	Brahmo
Sarkar, Bijaya Kumar, MA	Lecturer, University College	Senate House	Hindu
Sarkar, B N	Engineer & Contractor	9, Hastings Street	ditto
Sarkar, B N	Merchant	19, Strand Road	ditto
Sarkar, C K	Consulting Engineer	10, Hastings Street	ditto
Sarkar, D N, MA, BSc	Professor, St Paul's Cathedral College	33-1, Amherst Street	ditto

No.	Names.	Style or calling.	Residence or place of business.	Religion.
	Sarkar, Harendra K, MA	Professor, St Xavier's College	30, Park Street	Christian
	Sarkar, Hemanta Kumar	Manager, New Asiatic Life Insurance Co, Ld	8, Royal Exchange Place	Hindu
	Sarkar, Hiran Kumar, BE	Partner, Sircar Mittra & Co	5, Nimtalla Ghat Street	ditto
	Sarkar, Jagadish Chandra, BE	City Architect, Calcutta Corporation	Municipal Office	ditto
	Sarkar, Joy Kumar	Subdivisional Officer, Canals Division P. W. D.	Treasury Buildings	ditto
	Sarkar, L P	Assistant Branch Secretary, Oriental Govt Security Life Assurance Co, Ld	2, Clive Row	ditto
	Sarkar, Madhusudan, MA	Professor, Scottish Church College	4, Cornwallis Square	ditto
	Sarkar Mahendra Lal, MA	Professor, Scottish Church College	4, Cornwallis Square	Christian
	Sarkar, Mahendra Nath	Professor, Presidency College	86-1, College Street	Hindu
	Sarkar, N K	Merchant	10, Chowringhee	ditto
	Sarkar, N N, MA	Dy Chief Accountant, Calcutta Corporation	Municipal Office	ditto
	Sarkar, N R	General Manager, Hindusthan Co-operative Insurance Society, Ld	6A, Corporation Street	ditto
	Sarkar, P	Assistant Secretary, National Insurance Co, Ld	7, Council House Street	ditto
	Sarkar, Pabitra Ranjan	Officer, Hindusthan Co-operative Insurance Society, Ld	Hindusthan Buildings	ditto
	Sarkar, Pramatha Nath, MA	Lecturer, Bethune College	181, Cornwallis Street	ditto
	Sarkar, Pulin Bihari (Dr)	Lecturer, University College	92, Upper Circular Road	ditto
	Sarkar, Satya Prakash	Assistant Valuer, Calcutta Improvement Trust	5, Clive Street	ditto

Sarkar, Shachindra Nath, MSc	Merchant and Landholder	34-1-1, Beadon Street	ditto
Sarkar, Shikhi Bhusan	Manager, A T Gillespie	13, Government Place, East	ditto
Sarkar, Sudhir Kumar, MA	Partner, M C Sarkar & Sons	15, College Square	ditto
Sarkar, Sushil Kumar	Landholder	15-1, Issur Mill Lane	ditto
Sarkar, Sushovan Chandra	Professor, Presidency College	86-1, College Street	Brahmo
Saraogi, Devadutt	Merchant	63, Ezra Street	Hindu
Seal, Ashutos	Landholder	38, Muktaram Babu Street	ditto
Seal, Bhabani Charan, MSc	Station Engineer, All India Radio	1, Garstin Place	ditto
Seal, Brindaban Chandra	Sub-Accountant, Imperial Bank of India	Strand Road	ditto
Seal, Chaitanya Chand	Personal Assistant to the Chief Engineer, P H D, Bengal	3, Charnock Place	ditto
Seal, Hrishikesh	Proprietor, Calcutta Hardware and Metal Supply Co	15, Clive Row	ditto
Seal, Manick Lal	Partner, Calcutta Engineering Stores Co	9, Clive Row	ditto
Seal, Narendra Nath	Landholder	26, Ram Mohan Saha Lane	ditto
Seal, Shripati Nath	Cashier, National Bank of India, Ld	104, Clive Street	ditto
Sen, A C	Director, D M Das & Sons, Ld	28, Dalhousie Square	ditto
Sen, Achal Kumar	Landholder	10, Rajendra Nath Sen Lane	ditto
Sen, Adi Nath, MA, BSc (Glas)	Inspector of Technical and Industrial Institutions, Bengal	40-1A, Free School Street	ditto
Sen, A K	Director, D M Das & Sons, Ld	28, Dalhousie Square	ditto
Sen, Aloke Kumar, MSc	Professor, Vidyasagar College	39, Shankar Ghose Lane	ditto

No.	Names.	Style or calling.	Residence or place of business.	Religion.
	Sen, Amiya Kumar, MA	Lecturer, University College	Senate House	Brahmo
	Sen, Arun Chandra, MA	Professor, Scottish Church College	4, Cornwallis Square	Hindu
	Sen, Bhupati Mohan	Principal, Presidency College	86-1, College Street	Brahmo
	Sen, Bhupati Mohan	Manager, East India Insurance Co, Ld	10, Clive Street	Hindu
	Sen, Bimala Kanta, BA	Superintendent, Karim Bux Bros Press	9, Anthony Bagan Lane	ditto
	Sen, Binaya Chandra, MA, PhD	Lecturer, University College	Senate House	ditto
	Sen, Bipin Bihari (*Rai Sahib*)	Cashier, Gillanders, Arbuthnot & Co	8, Clive Street	ditto
	Sen, B K	Assistant, Turner Morrison & Co, Ld	6, Lyons Range	Christian
	Sen, B N, BA, BL	Assistant, P K Ghose & Co	100, Clive Street	Hindu
	Sen, Debendra Nath	Professor, Presidency College	86-1, College Street	Brahmo
	Sen, Dhirendra Krishna	Sub-Accountant, Imperial Bank of India	3, Strand Road	Hindu
	Sen, Dhirendra Nath, MA, PhD	Editor, " Advance "	74, Dharamtala Street	ditto
	Sen, G C	Managing Director, General Utilities Co	26, Strand Road	ditto
	Sen, Hemendra Kumar, DSc	Professor, University College	92, Upper Circular Road	ditto
	Sen, Indubhusan	Secretary, India Provident Co, Ld	10, Clive Row	ditto
	Sen, J C	Agent, Comilla Union Bank, Ld	10, Clive Street	ditto

Sen, Jitendra, ASAA, RA	Accountant	5, Hastings Street (Room 3)	ditto
Sen, Jitendra Mohan, BSc	Assistant Director of Public Instruction, Bengal	Writers' Buildings	Brahmo
Sen, Jogesh Chandra (*Rai Bahadur*)	Landholder	5, Kumartuli Street	Hindu
Sen, Jyotsna Nath	Assistant, Imperial Bank of India	3, Strand Road	ditto
Sen, Kanti Chandra	Assistant, Bird & Co	1-1, Clive Street	ditto
Sen, Kumud Bihari, MSc	Assistant, Bird & Co	1-1, Clive Street	ditto
Sen, Manimohan, MA	Professor, Vidyasagar College	39, Shankar Ghose Lane	ditto
Sen, Manimohan	Senior Accountant, C A O's Office, E I R	E I R House	ditto
Sen, M N, MA, B COM	Assistant, P K Ghose & Co	100, Clive Street	ditto
Sen, N	Secretary, D M Dass & Sons	28, Dalhousie Square	ditto
Sen, Nagendra Nath, AMAE	Member, Association of Engineers	2, Royal Exchange Place	ditto
Sen, Nikhil Ranjan, DSc, PhD	Professor, University College	92, Upper Circular Road	ditto
Sen, Nirmallya Chander, BA	Assistant, Longmans, Green & Co, Ltd	6, Old Court House Street	ditto
Sen, Nripendra Nath, DSc	Lecturer, University College	92, Upper Circular Road	ditto
Sen, N R, BA	Assistant, P K Ghose & Co	100, Clive Street	ditto
Sen, Paresh Nath	Elecl Asstt Engineer, Western Electrical Dn, P W D	Writers' Buildings	ditto
Sen, Pramode Chandra	Professor, Bangabasi College	25-1, Scott Lane	ditto
Sen, Pravash Kumar	Staff Assistant, Imperial Bank of India	3, Strand Road	ditto
Sen, Priya Ranjan, MA	Lecturer, University College	Senate House	Brahmo
Sen, Rabindra Nath	Partner, N L Roy & Co	7, Lyons Range	Hindu
Sen, Rabindra Nath, MA, PhD	Lecturer, Calcutta University	Senate House	ditto
Sen, Ramendra Kumar	Accountant, office of the Controller of Army Factory Accounts.	6, Esplanade, East	ditto

No.	Names.	Style or calling.	Residence or place of business.	Religion.
	Sen, Ramesh Chandra	Assistant, Martin & Co	12, Mission Row	Hindu
	Sen, Satish Chandra, MA, BL	Professor, City College	102-1, Amherst Street	ditto
	Sen, Satish Chandra, MA, BL	Vice-Principal, Vidyasagar College	39, Sankar Ghose Lane	ditto
	Sen, Satyendra Nath, MA	Professor, City College	102-1, Amherst Street	ditto
	Sen, S C	Superintendent of Agents, Scottish Union and National Insurance Co.	6, Lyons Range	ditto
	Sen, Shachindra Nath	Manager, East Bengal River Steam Service, Ld	87, Sovabazar Street	ditto
	Sen, S K, ASAA, BA	Accountant	4, Hastings Street	ditto
	Sen, S K, BA	Partner, Sen & Pandit	Mercantile Buildings	ditto
	Sen, S N	Accounts Officer, Metropolitan Insurance Co, Ld	28, Pollock Street	ditto
	Sen, S R, MA	Assistant, P K Sen & Co	100, Clive Street	ditto
	Sen, Satya Sadhan	Offg Accountant, D A-G, P & T Office	7, Koilaghat Street	ditto
	Sen, Sukumar, MA	Lecturer, Calcutta University	Senate House	ditto
	Sen, Sunil Chandra	Demonstrator, Presidency College	86-1, College Street	ditto
	Sen, Surendra Kumar, BL	Director, Bengal Central Bank, Ld	86, Clive Street	ditto
	Sen, Surendra Nath	Chief Clerk, Office of the Chief Mining Engineer, Railway Board	1, Council House Street	ditto
	Sen, Tarak Nath	Professor, Presidency College	86-1, College Street	ditto
	Sen, Tulsi Charan	Accountant, D A-G, P & T Office	7, Koilaghat Street	ditto
	Sen Gupta, Birendra Kumar, MA	Inspector of Schools, Education Department	Municipal Office	ditto
	Sen Gupta, Bhupati Bhusan	Dy Assistant Valuer, Calcutta Improvement Trust	5, Clive Street	ditto
	Sen Gupta, H L, MA	Managing Director, Union Bank of Bengal, Ld	5, Clive Row	ditto
	Sen Gupta, Indu Bhusan, MA, BL	Professor, Vidyasagar College	39, Shankar Ghose Lane	ditto

Sen Gupta, Jatish Ch	Professor, Presidency College	86-1, College Street	ditto
Sen Gupta, Kiran Chandra	Manager, Jail Depot	Writers' Buildings	ditto
Sen Gupta, Kriparam	Senior Accountant, A G's Office, Bengal	Treasury Buildings	ditto
Sen Gupta, Lalit Kumar	Assistant, Martin & Co	12, Mission Row	ditto
Sen Gupta, Monmohan, BE, SB (Rai Sahib)	P A to Chief Engineer, P W D	Writers' Buildings	ditto
Sen Gupta, R M	Manager, *Advance*	74, Dharamtala Street	ditto
Sen Gupta, Saroj Kumar	Manager, Calcutta Insurance, Ld	86, Clive Street	ditto
Sen Gupta, Subodh Ch	Professor, Presidency College	86-1, College Street	ditto
Sen Gupta, Tara Prasanna	Dy Assistant Valuer, Calcutta Improvement Trust	5, Clive Street	ditto
Seraogi, Baijnath, BA	Merchant	13, Saha Lane	Jain
Seth, Bhupatra M, BA	Partner, Ramdev Chokhany	7, Lyons Range	Hindu
Seth, G B, BA, FRHS (Lond)	Proprietor, Ivy Nursery and Seed Store	93-5, Hurry Ghose Street	ditto
Seth, Gostha Bihari	Zamindar	59, Banstola Street	ditto
Seth, Nalini Kanta	Landholder	347, Upper Chitpur Road	ditto
Seth, Phanindra Chandra	Manager, Lily Biscuit Co	3, Ramakanta Sen Lane	ditto

No.	Names.	Style or calling.	Residence or place of business.	Religion.
	Sethi, Jagat Ram, MSc	Chief Chemist, Imperial Chemical Industries Laboratory	18, Strand Road	Hindu
	Shafi, Mahomed Iqbal	Assistant, Mackinnon Mackenzie & Co	16, Strand Road	Mahomedan
	Shah, Ranada Prasad	General Secretary, Bengal River Service Co, Ld	9, Clive Street	Hindu
	Shaik, Sharafuddin, MA	Professor, Islamia College	8, Wellesley Street	Mahomedan
	Shariff, Md S N, BA	Sub-Assessor, Calcutta Corporation	Municipal Office	ditto
	Sharma, Kedar Nath, BSc	Asstt Engineer, Indian Stores Department (Inspution)	6, Esplanade, East	Hindu
	Sharma, P H	Asstt Traffic Supdt, Traffic Deptt, E B R	3, Koilaghat Street	ditto
	Sharma, Rajendra Nath, BSC (Cal)	Assistant Engineer, Indian Stores Department (Inspection)	6, Esplanade East	ditto
	Shastri, Ashutos, MA, PHD	Lecturer, Calcutta University	Senate House	ditto
	Shastri, Dakshina Ranjan (Pandit), MA	Lecturer, Sanskrit College	College Square	ditto
	Shastri, Prabhudutt	Professor, Presidency College	86-1, College Stret	ditto
	Shroff, Babulal	Honorary Secretary, Marwari Association	134, Mechuabazar Street	ditto
	Sikdar, Indu Bhusan	Passing Officer, Imperial Bank of India	Strand Road	Hindu
	Singh, Inder	Asstt Accounts Officer, E B R	3, Koilaghat Street	ditto
	Singh, Raghubir	Testing Officer, W W, Calcutta Corporation	Municipal Office	ditto
	Singh, Ram	Auditor, C A's Office, E I R	E I R House	ditto
	Singhania, Balabux	Partner, Deva Dutt Saraogi & Son	63, Ezra Street	ditto
	Sinha, Amulya Ratan, MA	Superintendent, Commercial Intelligence Department	1, Council House Street	ditto
	Sinha, Ananda Krishna, MA	Professor, Ripon College	24. Harrison Road	ditto

Sinha, Bibhas Chandra	Landholder	145-1, Baranasi Ghose Street	ditto
Sinha, Chaturbhuj Prosad	Head Clerk & Accountant, C E's Office, E I R	E I R House	ditto
Sinha, Harish Chandra, MA, PhD	Lecturer, University College	Senate House	ditto
Sinha, Jogesh Chandra	Professor, Presidency College	86-1, College Street	ditto
Sinha, K, BA	Revenue Officer, Calcutta Corporation	Sir Stuart Hogg Market	ditto
Sinha, Krishna Prasanna	Partner, A B Patrika, Ld	2, Ananda Chatterjee Lane	ditto
Sinha, Mohar Lal	Merchant	D-11, Jagannath Ghat Road	ditto
Sinha, Mohindra, BA	Professor, St Xavier's College	30, Park Street	ditto
Sinha, Narendra Krishna, MA, PHD	Lecturer, Calcutta University	Senate House	ditto
Sinha, Prafulla Kumar, MSc	Accountant, D A-G P & T Office	7, Koilaghat Street	ditto
Sinha, Purna Chandra	Landholder	147, Baranasi Ghose Street	ditto
Sinha, Radha Raman, BE	Chief Valuer and Surveyor, Calcutta Corporation	Municipal Office	ditto
Sinha, R M	Dy Chief Engineer, Signal, C E's Office, E I R	E I R House	ditto
Sinha, R N	Assistant, Andrew Yule & Co, Ld	8, Clive Row	ditto
Sinha, S C	Secretary, Diana Engineering Co	31, Clive Street	ditto
Som, Kshirod Ch	Manager, Nagarbasi, Chittaranjan Niharranjan Saradaranjan Modak.	87/2, College Street	ditto
Srikanteswaran, K V	Accounts Officer, C A O's Office, E I R	E I R House	ditto
Srinivasan, C M, BL	Secretary, Indian Mutual Life Association, Ltd.	8-2, Hastings Street	ditto

No.	Names.	Style or calling.	Residence or place of business.	Religion.
	Subarwal, B L	Superintending Engineer, Southern Circle, Irrigation Deptt	Writers' Buildings	Hindu
	Subnis, Jivaji Dattatray	Manager, George Newnes Book Co (India), Ld	10, Clive Row	ditto
	Subrahmanyan, S I BA	Accountant, D A-G P & T Office	7, Koilaghat Street	ditto
	Subrahmanyan, T V, MA	Sr Accountant, A G's Office, Bengal	Treasury Buildings	ditto
	Subramania, L B	Accountant, D A-G P & T Office	7, Koilaghat Street	ditto
	Subramanian, Venkata Subbier (*Rao Sahib*), BA.	P A to Controller of Inspection, Indian Stores Deptt	6, Esplanade, East	ditto
	Sudderuddin, K, BA	Resident	36, Theatre Road	Mahomedan
	Sundaram, Chokkanadhapuram Annaswamy.	Manager, Down Bros, Ld	21, Old Court House Street	Hindu
	Sundaram, P S, BA	Accountant, D A G P & T Office	7, Koilaghat Street	ditto
	Sur, A K, MA, FRES (Lond.)	Associate Editor, Commercial Gazette	2, Royal Exchange Place	ditto
	Sur, Bishnudas, MCom	Audit Inspector, Calcutta Corporation	Municipal Office	ditto

T

Tagore, Alakendra Nath	Landholder	5, Dwarkanath Tagore Lane	Hindu
Tagore, Bratindra Nath	Landholder	5, Dwarkanath Tagore Lane	ditto
Tagore, Kanakendra Nath	Landholder	5, Dwarkanath Tagore Lane	ditto
Tagore, Kshemendra Mohan	Landholder	27, Park Lane	ditto
Tagore, Nabendra Nath	Landholder	5, Dwarkanath Tagore Lane	ditto
Tagore, Ranendra Mohan	Landholder	11, Pathuriaghatta Street	ditto
Tagore, Rathindra Nath	Landholder	6, Dwarkanath Tagore Lane	Brahmo
Tandon, Lachmi Narain	Accountant, Allahabad Bank, Ld	6, Royal Exchange Place	Hindu
Tapuriah, Moongtu Lall (*Rai Bahadur*)	Merchant	42-1, Strand Road	ditto
Tarmaster, Magaldas Luxmidas, FSAA.	Proprietor, Tarmaster & Co	6, Old Post Office Street	ditto
Thakur, Amareswar, MA, PhD	Lecturer, University College	Senate House	ditto
Thapar, Karam Chand	Managing Director, Karamchand Thapar & Bros, Ld	5, Royal Exchange Place	ditto
Todi, Premsukhdass	Broker	2, Royal Exchange Place	ditto
Topader, Kshirode Nath	Passing Officer, Imperial Bank of India	8, Clive Street	ditto
Trivedi, P MA	Assessors, Calcutta Corporation	Municipal Office	ditto
Trivedi, Ramchandra Durlabhji	Chief Accountant, Jeewanlal (1929), Ld	101, Clive Street	ditto

V

Vidyabhusan, Manmatha Nath MA,	Professor, St Xavier's College	30, Park Street	Hindu
Vidyanathan, A, BL, ACII (Lond)	Officer, Hindusthan Co-operative Insurance Socieiy, Ld	Hindusthan Buildings	ditto
Vaish, Radha Krishna	Examiner of Patents	1, Council House Street	ditto

No.	Names.	Style or calling.	Residence or place of business.	Religion.
	Velji, H, FSDS (Eng)	Managing Proprietor, Laurel Typewriter Co	4-6A, Waterloo Street	Hindu
	Venkateswaran, Subbiah, DSc	Examiner of Patents	1, Council House Street	ditto
	Venugopal, C T, MSc	Accounts Officer, E B R	3, Kaylaghat Street	Christian
	Verma, B B	Executive Engineer, E I R	E I R House	Hindu
	Viccaji, V F	Incorporated Accountant, S R Batliboi & Co	1-B, Old Post Office Street	Zoroastrian
	Vyas, G M	Partner, G M Vyas	71, Clive Street	Hindu
	W			
	Wadhera, Sagar Chand	Manager, Karam Chand Thapar & Bros, Ld	5, Royal Exchange Place	Hindu
	Waziruddin	Assistant, Karnani Industrial Bank	3, Synagogue Street	Mahomedan
	Y			
	Yusuf, Maulvi Mahomed, MA, MRAS (*Khan Bahadur*).	Head Master, Calcutta Madrassa	19, Wellesley Square	Mahomedan

O. MOSES,
Clerk of the Crown.

Registered No. C207

No. 14 of 1937

The Calcutta Gazette

THURSDAY, APRIL 8, 1937.

CONTENTS:

	Page.
Corporation of Calcutta Notice ..	377
Calcutta Improvement Trust Notification	377
Daily Rainfall recorded in Bengal for the month of February 1937	378—393
Monthly and Annual Rainfall Table in the Province of Bengal for the year 1936	394—413
Return of Vital Statistics for the month of November 1936	414—419
Statements of weekly gauge readings on certain rivers in Bengal	420 & 429
Weather and Crop Report for the week ending 31st March 1937	421—424
Price-list (retail) of Staple Food-Crops in the local areas of Bengal for October to December 1936	425—428
Statement under the Cotton Ginning and Pressing Factories Act, 1925 ..	430

SUPPLEMENT.

Official Papers.

CALCUTTA IMPROVEMENT TRUST.

5, Clive Street, Calcutta, the 31st March 1937.

NOTIFICATION.

Notice is hereby given under section 7 (*4*) of the Calcutta Improvement Act, 1911, that the Councillors of the Corporation of Calcutta appointed by the Local Government under clause (*b*) of section 5 of the Calcutta Municipal Act, 1923, and those returned by the Special Constituencies (the Bengal Chamber of Commerce, the Calcutta Trades Association and the Calcutta Port Commissioners) have elected jointly under section 7 (*1*) (*c*) of the Calcutta Improvement Act, 1911, as modified by the Calcutta Improvement (Amendment) Act of 1926, Mr. Sudhansu K. Mitter of 34/1, Elgin Road, Calcutta, to be a Member of the Board of Trustees for the Improvement of Calcutta, in place of Mr. C. C. Biswas, C.I.E., resigned.

C. W. GURNER, *Chairman.*

CORPORATION OF CALCUTTA.

NOTICE.

Municipal Office, Calcutta, the 31st March 1937.

It is hereby notified for general information that the Corporation of Calcutta under powers vested in them in this behalf have by a resolution, dated the 18th March 1937, prescribed the alignment of the portion of Prinsep Street from the widened Chandney Chowk Street on the west to the western boundary of premises No. 39, Prinsep Street belonging to the Calcutta Electric Supply Corporation, Ltd., on the east in Ward No. 10 to a width of 40 feet.

A copy of the plan prepared in this behalf may be seen in the office of the Chief Valuer and Surveyor of the Corporation any working day between 11 a.m. and 3 p.m. and on Saturday up to 1 p.m. on payment of usual fees.

J. C. MUKERJEA,
Chief Executive Officer.

DAILY RAINFALL RECORDED IN BENGAL

Note.—The total and the average rainfall for all districts have been

Division and district.	Station.	1	2	3	4	5	6	7
Presidency.								
24-Parganas ..	Saugar Island (Obsy.) ..	..	..	..	..	..	..	..
	Diamond Harbour ..	..	..	..	..	..	..	..
	Budge-Budge	..	..	..	..	..	..	..
	Canning Town	..	..	..	..	..	..	..
	Alipore (Obsy.)	..	..	..	..	..	..	..
	Barrackpore	..	..	..	..	..	..	..
	Dum Dum	..	..	..	..	..	..	..
	Baraset*							
	Basirhat	..	..	..	..	..	..	..
	Gosaba	..	..	..	..	..	..	..
Nadia ..	Ranaghat	..	..	..	..	..	..	..
	Krishnagar (Obsy.) ..	..	..	..	..	..	..	..
	Chuadanga	..	..	..	..	..	..	..
	Meherpur	..	..	..	..	..	..	..
	Kushtia	..	..	..	..	..	..	..
	Haringhata	..	..	..	..	..	..	..
Murshidabad ..	Kandi	..	..	..	..	..	..	..
	Berhampur (Obsy.) ..	..	..	..	..	..	..	..
	Lalbagh	..	..	..	..	..	..	..
	Azimganj	..	..	..	..	..	..	..
	Jangipur*							
	Lalgola	..	..	..	..	..	..	..
	Akriganj	..	..	..	..	..	..	..
	Patkabari	..	..	..	..	..	..	..
	Dumkal	..	..	..	..	..	..	..
	Kallyanganj (Ishanpur)* ..							
	Khargram	..	..	..	..	..	..	..
	Bharatpur	..	..	..	..	..	..	..
Jessore ..	Narail	..	..	..	..	..	..	..
	Jessore (Obsy.)	..	..	..	..	..	..	..
	Jhenida	..	..	..	..	..	..	..
	Magura	..	..	..	..	..	..	..
	Bongaon	..	..	..	..	..	..	..
Khulna ..	Satkhira (Obsy.)	..	..	..	..	..	..	..
	Bagerhat	..	..	..	..	..	..	..
	Khulna (Obsy.)	..	..	..	..	..	..	..
	Kaliganj	..	..	..	..	..	..	..
	Nakipur*							
	Dumuria	..	..	..	..	..	..	..
	Rampal	..	..	..	..	..	..	..
	Kalaroa	..	..	..	..	..	..	..
	Paikgachha (Raruli) ..	..	..	..	..	..	..	..
	Mollahat	..	..	..	..	..	..	..
	Morelganj	..	..	..	..	..	..	..
	Islamkati	..	..	..	..	..	..	..
Burdwan.								
Burdwan ..	Kalna	..	..	..	..	..	..	..
	Burdwan (Obsy.) ..	..	..	..	..	..	..	..
	Katwa	..	..	..	..	..	..	..
	Asansol (Obsy.) ..	..	..	..	..	..	..	..
	Mankar	..	..	..	..	..	..	..
	Mangalkot	..	..	..	..	..	..	..
	Royna	..	..	..	..	..	..	..
	Monteswar	..	..	..	..	..	..	..
Birbhum ..	Suri	..	..	..	..	..	..	..
	Hetampur	..	..	..	..	..	..	..
	Rampurhat	..	..	..	..	..	..	..
	Bolpur	..	..	..	..	..	..	..
	Murarai*							
	Labpur	..	..	..	..	..	..	..
	Nalhati*							
	Mayureswar	..	..	..	..	..	..	..

*Not reported.

FOR THE MONTH OF FEBRUARY 1937.

calculated using the data of only those stations for which normals are available.

8	9	10	11	12	13	14	15	16	17	18	19	20
..	..	..	0·14	..	0·32	1·10	0·50	..	..	..	0·21	..
..	..	0·20	0·30	0·60	0·70	..	..	..	..	..	..	..
..	..	0·15	0·10	3·35	1·14	0·18	..	..	..	..	0·15	..
..	..	..	..	0·40	0·60	1·00	..	..	..	..	0·27	..
..	..	0·37	0·02	1·58	0·95	0·13	..	..	..	..	0·15	..
..	..	..	1·46	0·61	..	..	..	0·18	..	..	..	..
0·15	..	1·07	0·27	0·15	..	0·20	..	0·70	..	..	0·12	..
..	..	0·11	..	0·84	0·65	..	..	..	..	..	0·16	..
..	0·09	..	0·19	0·17	0·16	..	..	..	0·20	..	..	..
..	0·08	..	0·11	0·99	0·03	..	..	..	..	..	..	..
..	..	0·41	..	0·05	1·21	..	..	..	..	..	0·13	..
..	0·58	..	..	0·56	2·10	..	..	..	..	..	0·17	..
..	0·10	..	0·70	1·55	..	..	..	..	..	0·06	..	1·50
..	..	0·32	..	1·40	1·92	..	..	..	..	..	..	..
..	..	..	..	..	..	..	..	..	..	..	..	..
..	..	..	1·11	2·25	..	..	..	..	..	0·12	..	..
..	..	0·13	..	1·64	2·39	0·01	..	..	..	..	0·14	..
..	..	..	..	1·20	2·35	..	..	..	..	..	0·20	..
..	..	..	1·44	1·54	..	..	..	..	..	..	..	..
..	..	0·25	..	1·12	1·17	..	..	..	..	..	0·27	..
..	..	0·25	..	1·52	2·09	..	..	..	..	..	0·10	..
..	0·09	..	1·31	1·55	..	..	..	..	..	0·08	..	..
..	..	0·48	..	1·81	1·65	..	..	..	..	..	0·50	..
..	..	..	..	1·75	1·80	..	..	..	..	..	0·11	..
..	..	..	..	0·32	1·97	..	..	..	..	..	0·05	..
..	0·35	..	0·28	1·11	..	..	..	..	..	0·08	..	..
..	..	..	..	0·27	0·94	..	..	..	..	..	0·28	..
..	..	0·11	..	1·02	..	..	..	..	..	0·08	..	..
..	0·05	..	0·50	0·30	..	..	..	..	..	..	..	..
..	..	..	..	0·55	1·22	0·04	..	..	..	..	0·18	..
..	..	0·40	..	0·95	0·59	0·11	..	..	..	..	0·25	..
..	..	..	..	1·75	1·10	..	..	..	..	..	..	..
..	..	0·07	..	0·37	0·95	0·40	..	..	..	..	0·13	..
..	..	..	1·63	0·60	0·20	..	..	..	..	0·29	..	..
..	..	0·35	0·65	..	1·20	0·15	..	..	..	..	..	..
..	..	..	3·77	0·18	0·36	..	..	..	..	0·23	..	..
..	0·20	..	1·30	1·39	..	..	..	..	..	0·21	..	..
..	..	..	..	..	2·50	0·20	..	..	..	..	0·10	..
..	..	..	0·36	0·56	0·76	..	..	..	..	0·15	..	..
..	0·05	0·03	0·50	0·03	0·40	..	..	..	..	..	..	0·02
..	..	0·36	..	1·13	0·75	0·15	..	..	..	..	0·33	..
..	..	..	..	1·63	..	..	..	..	..	..	..	..
..	..	..	..	0·56	1·25	0·03	..	..	..	..	0·09	..
..	..	..	..	0·21	1·42	..	..	..	..	..	0·13	..
..	..	0·11	0·18	0·35	0·63	..	..	..	..	..	0·17	..
..	..	..	0·19	0·91	..	..	..	..	..	0·15	..	..
..	..	..	0·11	0·80	..	..	..	..	..	..	..	..
..	0·22	..	..	2·75	..	..	..	..	..	..	..	..
..	..	..	0·10	..	0·40	0·15	..	..	..	0·05	..	..
..	..	0·03	..	0·95	1·87	0·02	..	..	..	..	0·10	..
..	0·10	..	..	0·34	0·85	..	..	..	..	..	0·05	..
..	..	..	..	1·35	1·80	..	..	..	..	..	..	0·80
..	..	..	..	..	1·12	..	..	..	..	..	..	0·85
..	..	..	..	1·00	1·01	..	..	..	..	..	0·07	..
..	..	..	..	1·70	2·20	..	..	..	..	..	0·20	..

DAILY RAINFALL RECORDED IN BENGAL

Division and district.	Station.	21	22	23	24	25	26	27
Presidency.								
24-Parganas ..	Saugar Island (Obsy.) ..	..	0·03	2·04	..	..	..	1·05
	Diamond Harbour ..	..	..	0·53	..	0·25	..	0·99
	Budge-Budge ..	..	0·06	0·37	..	..	..	1·05
	Canning Town	..	..	..	0·77	..	..	0·50
	Alipore (Obsy.)	..	0·03	0·54	..	..	..	1·65
	Barrackpore	..	..	2·46	..	..	..	0·68
	Dum Dum	..	1·30	..	0·62	..	..	..
	Baraset*							
	Basirhat	..	..	0·97	..	..	..	0·34
	Gosaba	0·06	0·50	..	..	..	0·25	..
Nadia ..	Ranaghat	0·37	0·64	..	..	..	0·08	..
	Krishnagar (Obsy.) ..	..	1·08	0·93	..	..	..	0·16
	Chuadanga	..	..	1·11	..	..	..	0·11
	Meherpur	0·75	..	..	..	..	0·16	..
	Kushtia	..	0·91	0·24	..	..	..	..
	Haringhata	..	0·22	2·28	..	..	..	0·88
Murshidabad ..	Kandi	1·31	0·65	..	..	..	..	..
	Berhampore (Obsy.) ..	..	1·38	0·32	..	..	..	0·06
	Lalbagh	..	1·46	0·72	..	..	..	0·11
	Azimganj	1·14	0·29	..	..	..	..	..
	Jangipur*							
	Lalgola	..	1·36	0·14	..	..	..	0·01
	Akriganj	..	1·12	0·86	..	..	..	0·03
	Patkabari	0·95	0·61	..	..	..	..	..
	Dumkal	..	1·36	0·31	..	..	..	..
	Kallyanganj (Ishanpur)* ..							
	Khargram	..	2·50	0·70	..	..	..	0·03
	Bharatpur	..	0·98	0·60	..	..	..	0·10
Jessore ..	Narail	..	1·15	..	..	..	2·12	..
	Jessore (Obsy.)	..	0·23	1·08	..	..	..	0·28
	Jhenida	..	1·06	..	..	..	0·70	..
	Magura	0·40	0·40	..	..	..	1·33	..
	Bongaon	..	..	1·65	..	..	..	0·27
Khulna ..	Satkhira (Obsy.)	..	..	1·89	..	..	..	0·83
	Bagerhat	0·25	..	1·10	..	..	..	0·50
	Khulna (Obsy.)	..	..	0·94	..	..	..	0·21
	Kaliganj	..	1·41	..	..	..	0·59	..
	Nakipur*							
	Dumuria	..	..	0·98	..	..	0·45	..
	Rampal	..	0·46	..	..	..	0·23	..
	Kalaroa	..	1·70	..	..	..	0·40	..
	Paikgachha (Raruli) ..	..	0·82	..	..	..	..	0·50
	Mollahat	..	0·50	..	..	..	..	..
	Morelganj	0·05	0·75	..	..	..	..	0·94
	Islamkati	0·40	1·43	..	..	..	..	1·37
Burdwan.								
Burdwan ..	Kalna	..	1·44	..	..	..	0·23	..
	Burdwan (Obsy.)	..	0·97	0·86	..	..	..	0·47
	Katwa	..	1·88	0·55	..	..	..	0·10
	Asansol (Obsy.)	0·05	1·25	1·03	..	..	..	0·33
	Mankar	1·11	0·59	..	..	..	0·13	..
	Mangalkot	1·35	0·60	..	..	..	..	..
	Royna	0·78	0·60	..	..	..	0·76	..
	Monteswar	..	3·05	..	..	..	0·30	..
Birbhum ..	Suri	..	0·80	0·70	..	..	..	0·03
	Hetampur	..	1·95	0·50	..	..	..	0·07
	Rampurhat	0·10	..	..	..	..	..	0·55
	Bolpur	1·15	..	..	..	..	..	0·09
	Murarai*							
	Labpur	..	1·02	0·50	..	..	..	..
	Nalhati*							
	Mayureswar	1·30	0·20	..	..	..	..	..

*Not reported.

FOR THE MONTH OF FEBRUARY 1937.

28				Number of rainy days.	Average number of rainy days.	Total rainfall for the month.	Normal rainfall for the month.	Heaviest rainfall during the month.	Total rainfall from 1st December 1936 to 28th February 1937.	Normal rainfall from 1st December 1936 to 28th February 1937.
0·18				8	1·8	5·57	1·12	2·04	5·57	1·69
0·02				7	2·1	3·59	1·30	0·99	3·74	2·03
..				8	2·1	6·55	1·37	3·35	7·30	2·05
..				6	1·3	3·54	0·84	1·00	4·14	1·31
0·01				7	1·6	5·43	1·10	1·05	6·70	1·64
..				5	1·9	5·39	1·28	2·46	5·84	1·98
..				9	1·7	4·58	1·12	1·30	..	1·76
					2·0		1·28			1·99
..				6	1·7	3·07	1·03	0·97	3·31	0·67
..				6	(n)	1·62	(n)	0·50	1·77	(n)
..				4	1·8	2·30	1·21	0·99	2·34	1·77
..				6	1·7	3·97	1·20	1·21	4·15	1·73
..				6	1·7	4·63	1·11	2·10	4·84	1·63
..				6	1·8	4·82	1·03	1·55	4·92	1·53
..				5	1·7	4·79	0·96	1·92	4·79	1·41
..				3	0·5	3·38	0·35	2·28	..	0·60
..				5	1·7	5·44	0·92	2·25	5·64	1·43
..				6	1·7	6·07	0·88	2·39	6·20	1·35
..				6	1·4	6·04	0·70	2·35	6·04	1·13
..				4	1·6	4·41	0·71	1·54	4·45	1·22
					1·6		0·71			1·27
..				6	1·4	4·32	0·85	1·36	4·32	1·41
..				6	1·5	5·97	0·66	2·09	6·01	1·14
..				4	1·5	4·59	0·68	1·55	4·59	0·97
..				6	1·4	6·11	0·70	1·81	6·26	1·17
					1·9		0·82			1·86
..				5	(n)	6·89	(n)	2·50	7·28	(n)
..				5	(n)	4·02	(n)	1·97	4·02	(n)
..				5	2·0	5·09	1·24	2·12	5·28	1·92
..				6	1·9	3·08	1·34	1·08	3·22	1·90
..				4	1·8	2·97	1·23	1·06	3·18	1·77
..				5	1·9	2·98	1·09	1·33	3·33	1·60
..				5	1·7	3·91	1·17	1·65	5·12	1·76
..				7	1·0	5·02	0·75	1·89	5·16	1·35
..				5	1·8	4·70	1·16	1·75	4·70	1·81
..				6	1·4	3·07	0·84	0·95	3·07	1·74
..				6	2·0	4·72	1·43	1·63	5·32	2·13
					1·4		1·00			1·36
..				6	2·1	3·78	1·31	1·20	3·78	1·88
..				6	1·9	5·23	1·24	3·77	5·26	1·83
..				6	1·9	5·20	0·99	1·70	5·20	1·58
..				5	2·0	4·12	1·29	2·50	4·15	2·00
..				5	2·1	2·33	1·40	0·76	2·33	1·89
..				4	2·0	2·77	1·46	0·94	2·77	2·12
..				8	2·1	5·92	1·25	1·43	5·92	1·84
..				3	1·7	3·30	1·14	1·63	3·30	1·68
..				5	1·8	4·23	1·25	1·25	4·4	1·76
..				6	1·7	4·29	1·09	1·88	4·39	0·61
..				8	2·1	4·10	1·04	1·25	4·68	1·96
..				6	1·4	3·08	0·92	1·11	3·44	1·47
..				4	1·1	2·86	0·65	1·35	3·06	0·73
..				5	1·7	5·11	1·13	2·75	..	1·30
..				5	2·4	4·05	1·51	3·05	..	1·51
..				5	1·8	4·50	0·86	1·87	5·08	1·33
..				5	1·7	3·86	0·91	1·95	4·01	1·63
..				5	1·7	4·60	0·79	1·80	4·65	1·36
..				3	1·5	3·21	0·72	1·15	3·21	1·18
					1·4		0·59			0·99
..				4	1·4	3·60	0·54	1·02	3·60	0·88
					(n)		(n)			(n)
..				5	(n)	1·70	(n)	2·20	2·15	(n)

(n) Not ascertained.

DAILY RAINFALL RECORDED IN BENGAL

Division and district.	Station.	1	2	3	4	5	6	7
Burdwan—*concld.*								
Bankura ..	Bankura (Obsy.)	..	0·03	..	..	..	..	..
	Vishnupur	..	..	..	..	..	..	..
	Maliara	..	..	..	..	..	..	..
	Khatra	..	..	..	..	..	..	..
	Indas	..	..	..	..	..	..	..
	Kotalpur	..	..	..	..	..	..	..
	Onda	..	..	..	..	..	..	..
	Gangajalghati	..	..	..	..	..	..	..
	Raipur	..	..	..	..	..	..	..
	Sonamukhi	..	..	..	..	..	..	..
	Taldangra	..	..	..	..	..	..	..
	Saranga	..	..	..	..	..	..	..
	Indpur	..	..	..	..	..	..	..
	Arhara*							
	Barjora	..	..	..	..	..	..	..
	Simlapal*							
	Mejhia	..	..	..	..	..	..	..
	Siromanipur	..	..	..	..	..	..	..
	Palasdanga*							
	Chatna	..	..	..	..	..	..	..
	Ranibandh	..	..	..	..	..	..	..
	Saltora*							
	Joypur	..	..	..	..	..	..	..
	Ambikanagar*							
	Jairampur	..	..	..	..	..	..	..
Midnapore ..	Contai	..	..	..	..	..	..	0·11
	Tamluk	..	..	..	..	..	..	..
	Midnapore (Obsy.) ..	..	..	..	..	..	..	..
	Ghatal	..	..	..	..	..	..	..
	Kukrahati	..	..	..	..	..	..	..
	Amlagura	..	..	..	..	..	..	..
	Panskura	..	..	..	..	..	..	..
	Dantan	..	..	..	..	..	..	..
	Chandrakona	..	..	..	..	..	..	..
	Pachet	..	..	..	..	..	1·12	..
	Bhagwanpur	..	..	..	..	..	..	0·21
	Kashiary	..	..	..	..	..	..	..
	Nayabasan	..	..	..	..	..	..	..
	Silda (Belpahari)	..	..	..	..	..	..	..
	Goaltore	..	..	..	..	..	..	..
	Salboni	..	..	..	..	..	..	..
	Narayangarh	..	..	..	..	..	..	..
	Ramnagar	..	..	..	..	..	..	0·21
	Mohanpur*							
	Jenka (Khajri)	..	..	..	..	..	..	..
	Nandigram	..	..	..	..	..	..	..
	Moyna	..	..	..	..	0·10	..	..
	Pingla	..	..	..	..	..	..	..
	Narajole	..	0·60	..	..	..	1·00	..
	Kolaghat (Dainan) ..	..	..	..	..	..	..	..
	Balichak	..	..	..	..	..	..	..
	Jhargram	..	..	..	..	..	..	..
	Kharagpur	..	..	..	..	..	..	..
Hooghly ..	Serampore	..	..	..	..	..	..	..
	Hooghly	..	..	..	..	..	..	..
	Arambagh	..	..	..	..	..	..	..
	Chanditala	..	..	..	..	..	..	..
	Tentulia	..	..	..	..	..	..	..
	Boinchee	..	..	..	..	..	..	..
	Khanakul	..	..	..	..	..	..	..
	Tarakeswar	..	..	..	..	..	..	..
Howrah ..	Howrah	..	..	..	..	..	..	..
	Uluberia	..	..	..	..	..	..	..
	Amta	..	..	..	..	..	..	..
Rajshahi.								
Rajshahi ..	Boalia (Obsy.)	..	..	..	..	..	..	..
	Nator	..	..	..	..	..	..	..
	Naogaon	..	..	..	..	..	..	..
	Lalpur	..	..	..	..	..	..	..
	Manda	..	..	..	..	..	..	..
	Mahadebpur	..	..	..	..	..	..	..
	Tanor	..	..	..	..	..	..	..
	Chaugram	..	..	..	..	..	..	..
	Joari*							
	Badalgachi	..	..	..	..	..	..	..

*Not reported.

FOR THE MONTH OF FEBRUARY 1937.

8	9	10	11	12	13	14	15	16	17	18	19	20
..	..	..	0·02	0·61	1·05	0·02	..	..	..	..	0·24	..
..	..	0·02	0·02	0·56	0·25	..	..	..	..	..	0·09	..
..	..	..	0·07	0·09	0·93	..	..	..	..	..	..	..
..	..	..	..	..	..	..	..	..	..	..	..	..
..	..	..	0·95	1·21	..	..	..	..	..	0·04	..	..
..	..	..	..	1·70	1·05	..	..	..	..	0·03	..	..
..	..	0·02	..	0·19	0·47	0·06	..	..	0·20	..	..	..
..	..	..	0·64	0·25	1·00	..	..	..	..	..	..	..
..	..	0·18	0·28	0·74	0·13	..	..	..	..	..	0·18	..
..	..	..	0·90	1·45	0·02	..	..	..	..	0·20	..	..
..	..	..	..	0·80	0·46	..	..	..	..	..	0·20	..
..	..	0·14	0·23	1·05	0·12	..	..	..	..	..	0·21	..
..	..	..	0·03	0·25	0·37	..	..	..	..	..	0·20	..
..	..	..	0·06	0·24	0·97	..	..	..	..	..	0·15	..
..	..	0·02	0·27	0·42	1·02	..	..	..	..	..	..	..
..	..	..	..	0·75	1·15	..	..	..	..	0·10	..	..
..	..	0·15	1·30	1·09	..	..	..	..	..	..	..	..
..	0·05	0·20	1·10	0·60	..	..	..	..	0·02	0·07	..	0·09
..	..	0·06	..	1·45	0·50	0·05	..	..	..	..	..	..
..	..	..	..	1·09	1·13	..	..	..	..	..	..	..
..	..	..	0·14	0·37	1·71	0·69	0·05	..	..	..	0·29	0·01
..	..	..	1·95	1·94	0·16	..	..	..	..	0·11	..	..
..	..	0·08	0·02	1·56	0·97	..	..	..	..	..	0·10	..
..	..	0·05	0·24	0·44	0·97	..	..	..	..	..	..	..
..	..	0·30	..	0·80	0·90	0·42	..	..	..	..	0·12	..
..	..	0·04	0·20	0·67	0·85	..	..	..	..	..	0·20	..
..	..	0·10	0·06	2·10	1·90	0·05	..	..	..	..	0·40	..
..	0·01	0·12	1·10	1·20	0·04	..	..	..	..	..	..	..
..	0·10	0·16	1·04	0·58	..	..	..	..	..	0·19	..	..
0·60	0·92	0·50	..	1·30	..	..	..	..	..	0·25	..	..
..	..	1·30	0·03	1·02	1·75	0·18	..	..	..	..	0·14	..
..	..	..	1·50	4·20	..	..	1·30	..	..	..	..	..
..	..	0·13	0·18	0·35	1·65	0·04	..	..	..	..	0·26	..
..	0·24	0·07	0·98	0·08	..	..	..	..	..	0·12	..	..
..	..	0·23	0·16	1·27	0·38	..	..	..	..	..	0·19	..
..	..	1·75	..	0·60	..	..	..	..	..	0·15	..	..
..	..	..	0·03	1·60	3·55	0·32	..	..	..	..	0·33	..
..	0·02	0·20	..	2·07	0·40	0·11	..	..	..	0·54	..	..
..	..	..	0·06	0·77	1·64	0·52	..	..	..	..	0·11	..
..	1·00	0·50	0·40	0·32	1·40	..	..	..	..	..	0·31	
..	..	0·26	..	1·10	2·30	..	..	..	..	..	..	..
..	..	..	0·20	3·10	1·07	..	..	..	..	0·33	..	..
..	0·60	..	..	0·40	..	..	0·20	0·20	..	..	0·30	..
..	..	0·09	0·07	2 20	0·78	0·03	..	..	..	..	0·15	..
..	..	0·07	..	1·91	2·59	..	..	..	..	0·11	..	..
..	..	..	0·68	0·32	..	..	..	..	..	0·18	..	..
..	..	..	1·58	2·55	..	..	..	..	..	0·12	..	..
..	0·08	..	2·32	0·65	..	..	..	..	..	..	..	..
..	..	0·18	..	0·75	1·18	0·30	..	..	..	..	0·04	..
..	..	0·06	0·03	1·28	0·72	..	..	..	..	..	0·06	..
..	..	..	..	2·00	0·47	0·24	..	..	..	..	..	..
..	0·10	..	..	1·30	..	..	..	..	..	..	..	..
..	..	..	..	0·87	1·75	0·12	..	..	..	..	0·13	..
..	..	0·10	2·80	0·58	..	..	..	..	..	..	..	..
..	..	..	1·04	0·60	..	..	..	..	..	0·20	..	..
..	..	..	..	1·45	0·74	0·05	..	..	..	..	0·14	..
..	..	0·27	0·08	2·90	1·45	0·30	..	..	..	..	0·25	..
..	..	..	0·30	1·50	0·58	..	..	..	..	..	0·37	..
..	..	0·55	..	1·05	1·50	..	..	..	..	..	0·10	..
..	0·46	..	1·16	1·48	..	..	..	..	..	..	..	..
..	..	..	..	0·99	1·05	..	..	..	..	0·32	..	..
..	0·07	..	0·70	1·06	..	..	..	..	..	..	0·17	..
..	..	..	..	1·40	1·50	0·60	..	..	..	..	0·45	..
..	..	..	1·23	0·81	..	..	..	..	..	..	0·42	..
0·14	..	..	0·40	1·29	..	..	..	..	..	0·35	1·10	..
..	..	..	..	0·68	0·93	..	..	..	..	..	..	..
..	..	..	1·00	0·90	..	..	..	..	..	0·40	..	..

DAILY RAINFALL RECORDED IN BENGAL

Division and district.	Station.	21	22	23	24	25	26	27
Burdwan—*concld.*								
Bankura ..	Bankura (Obsy.) ..	..	1·12	0·37	..	..	..	0·44
	Vishnupur	..	0·61	0·60	..	..	..	..
	Maliara	..	1·42	0·32	..	..	..	0·37
	Khatra	..	0·50	0 40	..	..	..	..
	Indas	0·66	0·75	..	..	..	1·20	..
	Kotalpur	0·30	..	0·85	..	..	..	1·24
	Onda	..	0·79	..	..	..	..	1·22
	Gangajalghati	..	0·60	0·47	..	..	..	..
	Raipur	..	0·85	0·07	..	..	..	0·53
	Sonamukhi	1·10	0·40	..	..	..	0·77	..
	Taldangra	..	..	0·80	..	..	..	2·50
	Saranga	..	1·03	0·25	..	..	..	0·10
	Indpur	..	0·62	0·20	..	..	..	0·80
	Arhara*							
	Barjora	..	0·69	0·45	..	..	..	1·04
	Simlapal*							
	Mejhia	..	..	0·23	..	..	..	..
	Siromanipur	0·40	1·30	0·28	..	..	1·10	..
	Palasdanga*							
	Chatna	..	1·15	0·66	..	..	1·20	..
	Ranibandh	0·40	0·16	..	..	..	0·32	..
	Saltora*							
	Joypur	..	1·29	0·55	..	..	1. 66	..
	Ambikanagar*							
	Jairampur	..	..	2·02	0·24	..	..	1·22
Midnapore ..	Contai	..	0·08	1·05	..	..	..	1·66
	Tamluk	0·21	0·18	..	..	..	1·21	..
	Midnapore (Obsy.) ..	..	0·52	0·25	..	..	..	1·66
	Ghatal	..	..	1·00	0·05	..	..	0·99
	Kukrahati	0·12	0·25	..	..	..	..	1·80
	Amlagura	..	0·50	0·77	..	..	..	0·23
	Panskura	..	0·20	0·22	..	..	..	1·50
	Dantan	0·38	0·69	..	..	..	1·50	..
	Chandrakona	0·35	0·46	..	..	..	1·11	..
	Pachet	..	0·15	..	0·70	..	..	1·19
	Bhagwanpur	..	0 98	0·39	..	..	0·61	0·05
	Kashiary	..	3·10	..	..	..	1·70	..
	Nayabasan	.	1·15	1·85	..	..	..	0 85
	Silda (Belpahari)	0·10	0·63	..	..	..	..	..
	Goaltore	..	0·65	0·17	..	..	..	0·50
	Salboni	0·16	0·02	..	..	..	0·50	..
	Narayangarh	..	0·51	0·65	..	..	..	0·95
	Ramnagar	0·33	0·87	..	..	..	1·02	0·14
	Mohanpur*							
	Jenka (Khajri)	0·10	0·23	1·11	..	..	..	1·96
	Nandigram	0·72	3·43	..	..	..	0·22	0·15
	Moyna	0·40	0·40	0·40	..	..	0·42	0·20
	Pingla	0·38	..	..	..	..	0·80	..
	Narajole	0·40	..	..	0·30	..	..	..
	Kolaghat (Dainan) ..	..	0·15	0·23	..	..	..	0·60
	Balichak	..	0·25	0·12	..	..	..	1·02
	Jhargram	0·52	0·29	..	..	..	0·58	..
	Kharagpur	0·28	0·18	..	..	..	1·41	..
Hooghly ..	Serampore	0·20	2·48	..	..	..	0·88	..
	Hooghly	..	..	1·95	..	..	..	2·18
	Arambagh	..	0·53	0·55	..	..	..	0·26
	Chanditala	..	2·00	..	..	..	..	1·34
	Tentulia	..	1·40	..	..	..	0·60	..
	Boinchee	..	0·41	0·90	..	..	..	0·55
	Khanakul	0·50	..	1·40	0·80	..	..	..
	Tarakeswar	1·10	0·95	..	..	..	0·90	..
Howrah ..	Howrah	..	0·32	0·37	..	..	..	1·45
	Uluberia	..	0·10	0·46	..	..	..	0·75
	Amta	..	0·06	0·17	..	..	..	1·05
Rajshahi.								
Rajshahi ..	Boalia (Obsy.)	..	1·40	0·40	..	..	..	0·05
	Nator	1·36	0·34	..	..	0·04	..	..
	Naogaon	..	..	0·90	..	..	..	..
	Lalpur	0·75	0·27	..	..	..	..	..
	Manda	..	1·57	0·64	..	..	..	..
	Mahadebpur	..	..	1·06	..	..	..	..
	Tanor	2·27	..	..	..	..	..	..
	Chaugram	..	1·28	0·56	..	..	..	..
	Joari*							
	Badalgachi	0·80	..	..	..	..	..	..

*Not reported.

FOR THE MONTH OF FEBRUARY 1937.

28				Number of rainy days.	Average number of rainy days.	Total rainfall for the month.	Normal rainfall for the month.	Heaviest rainfall during the month.	Total rainfall from 1st December 1936 to 28th February 1937.	Normal rainfall from 1st December 1936 to 28th February 1937.
..				6	1·9	3·90	1·04	1·12	4·34	1·63
0·76				5	1·7	2·92	1·21	0·76	3·42	1·71
..				4	1·8	3·20	0·96	1·42	3·48	1·54
..				2	1·8	0·90	1·09	0·50		1·70
..				5	1·4	4·81	1·00	1·21	4·83	1·46
..				5	1·5	5·17	1·10	1·70	5·57	1·55
..				5	1·8	2·95	1·06	1·22	3·01	1·45
..				5	1·4	2·96	0·88	1·00	3 34	1·39
..				7	1·8	2·96	1·27	0·85	3·08	1·90
..				6	1·7	4·84	1·21	1·45	4·96	1·73
..				5	1·4	4·76	0·84	2·50	6·31	1·17
..				8	1·2	3·13	0·79	1·05	3·20	1·19
..				6	1·0	2·47	0·87	0·80	2·87	1·17
					(n)		(n)			(n)
..				6	(n)	3·60	(n)	1·04	4·00	(n)
					(n)		(n)			(n)
..				4	(n)	1·96	(n)	1·02		(n)
..				7	(n)	5·08	(n)	1·30	5·28	(n)
					(n)		(n)			(n)
..				6	(n)	5·55	(n)	1·30		(n)
..				6	(n)	3·01	(n)	1·10	3·08	(n)
					(n)		(n)			(n)
..				5	(n)	5·56	(n)	1·66	5·56	(n)
					(n)		(n)			(n)
..				5	(n)	5·91	(n)	2·02		(n)
0·08				8	1·7	6·24	1·29	1 71		1·98
..				7	1·8	5·76	1·17	1·95	6·46	1·74
0·02				6	1·8	5·18	1·20	1·66	5·18	1·91
..				5	1·6	3·74	0·95	1·00	4·26	1·50
0·05				8	1·7	4·76	1·19	1·80	5·30	1·76
..				7	1·7	3·46	1·13	0·85	3·46	1·70
..				7	1·8	6·53	1·18	2·10	7·63	1·83
0·05				6	1·9	5·09	1·19	1·50	5·13	1·79
..				8	1·4	3·99	1·07	1·11	3·99	1·62
..				9	1·2	6·73	0·95	1·30	7·14	1·27
..				9	1·5	6·66	1·03	1·75	7·16	1·44
..				5	1·0	11·80	1·17	4·20		1·51
0·06				8	0·9	6·52	0·65	1·85	6·57	1·45
..				5	1·9	2·22	1·05	0 98	2·22	1·54
..				8	0·7	3·55	0·82	1·27	3·68	1·28
..				5	1·5	3·18	0·88	1·75	3·18	1·11
0·05				7	1·3	7·99	0·89	3 55	8·74	1·77
..				10	1·5	5·91	0·98	2·07	6·64	1·34
					2·0		0·93			1·23
0·09				8	1·6	6·59	0·83	1·96	6·96	1·10
..				10	1·3	8·45	0·99	3·43	8·95	1·36
..				9	1·9	5·58	1·49	2·30		1 62
..				6	1·9	5·88	2·25	3·10		2·43
..				9	1·8	4·00	1·50	1·00		1·84
0·01				6	(n)	4·31	(n)	2·20	4·58	(n)
..				6	(n)	6·07	(n)	2·59	6·18	(n)
..				6	(n)	2·57	(n)	0·68	2·57	(n)
..				6	(n)	6·12	(n)	2·55	6·12	(n)
..				5	2·0	6·61	1·21	2·48	7·36	1·79
..				6	1·7	6·58	1·21	2·18	6·86	1·82
..				5	1·7	3·49	1·07	1·28	3·79	1·62
..				5	(n)	6·05	(n)	2·00		(n)
..				4	(n)	3·40	(n)	1·40	3·55	(n)
..				7	(n)	4·73	(n)	1·75		(n)
..				6	(n)	6·18	(n)	2·80	6·68	(n)
..				6	(n)	4·79	(n)	1·10	4·94	(n)
..				6	1·7	4·52	1·11	1·45	5·62	1·70
..				8	1·8	6·56	1·11	2·90	7·31	1·68
..				6	1·8	4·03	1·49	1·50	4·73	2·14
..				6	1·5	5·05	0·58	1·50	5·05	0·99
..				5	1·5	4·84	0·74	1·48	4·87	1·25
..				4	1·4	3·26	0·71	1·05	3·50	1·15
..				5	1·5	3·02	0·78	1·06	3·21	1·20
..				6	1·2	6·16	0·57	0·57		1·02
..				4	1·2	3·52	0·67	1·23	3·52	1·15
..				6	1·4	5·55	0·52	2·27		1·18
..				4	(n)	3·45	(n)	1·28		(n)
..					(n)		(n)			(n)
..				4	(n)	3·10	(n)	1·00	3·25	(n)

(n) Not ascertained.

DAILY RAINFALL RECORDED IN BENGAL

Division and district.	Station.	1	2	3	4	5	6	7
Rajshahi—*concld.*								
Dinajpur ..	Nithpur	..	..	..	..	..	..	..
	Nawabganj	..	..	..	..	..	..	..
	Gangarampur	..	..	..	..	..	..	..
	Itahar	..	..	..	..	..	..	..
	Raiganj	..	..	..	..	..	..	..
	Dinajpur (Obsy.) ..	..	..	..	..	..	..	..
	Balurghat	..	..	..	..	..	..	..
	Thakurgaon	..	..	..	..	..	..	..
	Setabganj	..	..	..	..	..	..	..
	Ramganj*							
	Atwari	..	..	..	..	..	..	..
	Birganj	..	..	..	..	..	..	..
	Parbatipur	..	..	..	..	..	..	..
	Patnitola	..	..	..	..	..	..	..
	Sapahar	..	..	..	..	..	..	..
Jalpaiguri ..	Jalpaiguri (Obsy.) ..	..	..	..	..	..	..	..
	Alipur Duars	..	..	..	..	..	..	..
	Falakata	..	..	..	..	..	..	..
	Debiganj	..	..	..	..	..	..	..
	Buxa	..	..	..	..	..	..	..
	Kalchini	..	..	..	..	..	..	..
	Kumargram	..	..	..	..	..	..	..
Darjeeling ..	Siliguri	..	..	..	..	..	..	..
	Darjeeling (Obsy.) ..	..	..	..	..	..	..	..
	Kalimpong (Obsy.) ..	..	..	..	..	..	..	0·01
	Mongpoo	..	..	..	..	..	..	..
	Kurseong	..	..	..	..	..	..	..
	Pedong	..	..	..	..	..	..	0·02
Rangpur ..	Bhawaniganj (Gaibandha) ..	..	..	..	..	..	..	..
	Rangpur (Obsy.) ..	..	..	..	..	..	..	..
	Pirganj	..	..	..	..	..	..	..
	Kurigaon	..	..	..	..	..	..	..
	Gobindganj	..	..	..	..	..	..	..
	Bagdogra (Nilphamari) ..	..	..	..	..	..	..	..
	Ulipur	..	..	..	..	..	..	..
	Sunderganj	..	..	..	..	..	..	..
	Saidpur	..	..	..	..	..	..	..
Bogra ..	Sherpur	..	..	..	..	..	..	..
	Nowkhilla	..	..	..	..	..	..	..
	Bogra (Obsy.)	..	..	..	..	..	..	..
	Panchbibi	..	..	..	..	..	..	..
	Khetlal*							
	Adamdighi	..	..	..	..	..	..	..
	Dubchanchia	..	..	..	..	..	..	..
Pabna ..	Shazadpur	..	..	..	..	..	..	..
	Pabna	..	..	..	..	..	..	..
	Sirajganj (Obsy.)	..	..	..	..	..	..	..
	Iswardi	..	..	..	..	..	..	..
Malda ..	Malda (Obsy.)	..	..	..	..	..	..	..
	Chanchal	..	..	..	..	..	..	..
	Gazol	..	..	..	..	..	..	..
	Sibganj	..	..	..	..	..	..	..
	Gomastapur	..	..	..	..	..	..	..
	Nawabganj	..	..	..	..	..	..	..
Dacca.								
Dacca ..	Munshiganj	..	..	..	..	..	..	..
	Dacca	..	..	..	..	..	..	..
	Nawabganj	..	..	..	..	..	..	..
	Narayanganj (Obsy.) ..	..	..	..	..	..	..	..
	Naraingdi	..	..	..	..	..	..	..
	Manikganj	..	..	..	..	..	..	..
	Joydebpur	..	..	..	..	..	..	..
	Kapasia	..	..	..	..	..	..	..

*Not reported.

FOR THE MONTH OF FEBRUARY 1937.

8	9	10	11	12	13	14	15	16	17	18	19	20
..	..	..	..	1·03	0·98	..	..	..	..	..	0·41	..
..	..	..	0·20	0·50	..	..	..	..	..	..	..	..
..	..	..	0·26	0·80	0·35	..	..	..	..	0·40	..	..
..	..	..	0·42	0·50	0·10	.	..	..	..	0·21	..	..
..	..	0·15	..	0·20	0·25	0·05	..	..	..	0·05	0·50	..
..	..	..		0·14	0·25	0·07	..	..	..	..	0·23	..
..	..	0·05	..	0·40	1·12	0·04	..	..	..	..	0·45	..
..	..	..	..		0·21	0·11	..	..	..	..	0·05	..
..	..	0·05	..	0·17	0·26	..	..	..	..	..	0·26	..
..	..	..	..	..	..	..	..	..	..	.	0·10	..
..	..	0·08	0·17	..	..	..	..	..	..	0·20	..	..
..	..	..	..	0·12	.	0·90	..	..	..	..	..	..
..	..	..	..	0·63	1·23	0·80	..	..	..	..	0·37	..
..	..	..	..	..	1·44	.	..	..	..	..	0·46	..
..	..	0·10	..	0·01	0·14	1·18	..	..	..	..	0·13	0·40
..	..	..	..	..	0·03	0·98	..	..	..	..	0·12	0·11
..	..	..	..	..	0·10	..	..	..	..	..	0·60	1·20
..	..	..	..	0·05	0·13	0·58	..	..	..	.	0·11	.
..	0·78	..	..	.	2·75	..	..	..	..	0·23	0·51	..
..	..	0·47	..	..	0·01	2·71	..	..	..	.	0·19	0·27
..	..	..	..	..	..	.	..	..	..	0·20	0·30	..
..	0·09	..	0·03	..	0·96	..	..	..	.	0·13	0·06	..
..	..	0·04	..	0·10	0·03	0·82	..	..	..	..	0·55	0·05
..	..	0·02	..	0·01	0·04	1·41	..	..	..	..	0·52	0·01
..	..	0·16	0·01	0·12	1·81	..	..	..	..	..	0·40	0·25
..	..	0·14	.	0·06	..	1·12	..	..	..	..	0·59	0·05
..	0·16	..	0·03	0·02	0·01	1·00	..	..	..	..	0·53	0·06
..	..	..	..	0·16	0·21	0·02	..	..	..	..	0·44	..
..	..	..	..	..	0·13	0·29	..	..	..	..	0·09	..
..	..	..	..	..	0·40	0·20	..	..	..	..	0·40	..
..	..	..	..	0·07	0·05	..	..	..	..	..	0·22	0·07
..	..	..	..	1·20	..	..	..	..	..	..	..	..
..	..	..	0·02	0·14	..	..	..	..	..	0·24	..	..
..	..	..	..	..	0·11	0·15	..	..	..	..	0·45	..
..	..	.	..	0·30	..	0·69	..	..	..	..	0·34	..
..	0·04	..	0·02	..	0·14	..	..	..	..	0·16	..	..
..	..	..	..	0·42	0·99	..	..	..	..	..	0·20	..
..	..	..	0·66	0·51	..	..	..	..	..	0·21	..	..
..	..	..	..	0·45	0·87	..	..	..	..	..	0·33	..
0·06	..	..	0·36	0·70	..	..	..	..	..	0·54	..	..
..	..	..	..	..	1·50	..	..	..	..	..	0·30	..
..	..	..	..	0·62	0·89	..	..	..	..	..	..	..
..	..	..	1·02	0·86	..	..	..	..	..	..	..	..
..	..	0·21	..	1·10	1·37	..	..	..	..	..	0·04	..
..	..	0·05	..	0·30	0·98	..	..	..	..	..	0·04	..
..	..	..	..	2·73	..	..	..	..	..	..	..	..
..	..	..	..	1·11	1·20	..	..	..	..	..	0·38	..
..	..	0·08	..	0·44	0·60	..	..	..	..	..	0·48	..
..	..	..	0·62	0·90	..	..	..	..	..	0·18	..	..
..	..	..	1·35	1·55	0·60	..	..	..	..	..	0·55	..
..	..	..	..	1·40	0·94	..	..	..	..	..	0·30	..
..	..	..	1·48	1·28	..	..	..	..	..	0·26	..	..
..	..	..	..	..	0·13	1·30	..	..	..	..	..	..
..	..	0·04	..	0·54	0·73	0·06	..	..	..	..	..	..
..	..	0·07	..	1·35	0·92	0·03	..	..	..	..	..	..
..	..	0·02	..	0·22	0·88	0·14	..	..	..	..	0·03	..
..	0·05	..	..	1·20	.	..	..	..	..	..	..	..
..	..	..	..	..	1·80	..	..	..	..	..	..	..
..	..	..	0·45	0·85	..	..	..	..	..	..	..	..
..	..	..	..	0·35	0·50	..	..	..	..	..	..	..

DAILY RAINFALL RECORDED IN BENGAL

Division and district.	Station.	21	22	23	24	25	26	27
Rajshahi—*concld.*								
Dinajpur ..	Nithpur	..	0·39	..	..	..	..	..
	Nawabganj	..	0·40	0·50	..	..	..	..
	Gangarampur	0·35	..	..	..	..	..	..
	Itahar	0·20	0·29	..	..	..	..	..
	Raiganj	..	0·35	0·55	..	..	..	..
	Dinajpur (Obsy.)	..	0·31	0·68	..	..	..	..
	Balurghat	..	0·95	0·20	..	..	..	..
	Thakurgaon	..	0·67	0·74	..	..	..	..
	Setabganj	..	0·24	0·47	..	..	..	..
	Ramganj*							
	Atwari	..	..	..	..	..	..	..
	Birganj	0·42	0·25	..	..	..	..	..
	Parbatipur	0·50	1·50	..	..	..	..	..
	Patnitola	..	0·70	0·17	..	..	..	..
	Sapahar	..	0·96	0·10	..	..	..	..
Jalpaiguri ..	Jalpaiguri (Obsy.) ..	..	0·02	0·29	..	..	..	..
	Alipur Duars	..	..	0·35	0·02	..	..	..
	Falakata	..	0·05	..	0·25	..	..	..
	Debiganj	..	0·11	1·10	..	..	..	..
	Buxa	0·10	0·39	..	0·06	0·10	0·80	1·40
	Kalchini	0·01	0·13	0·36	0·01	0·01	..	0·02
	Kumargram	..	0·20	0·10	0·10	..	..	..
Darjeeling ..	Siliguri	0·09	0·27	0·02	..	..	0·12	..
	Darjeeling (Obsy.) ..	..	0·37	0·45	0·04	..	..	0·08
	Kalimpong (Obsy.) ..	..	0·22	0·37	..	..	..	0·28
	Mongpoo	..	0·26	0·44	..	..	0·05	0·55
	Kurseong	0·09	0·17	0·40	..	..	..	0·14
	Pedong	0·58	0·22	0·41	..	..	0·01	0·18
Rangpur ..	Bhawaniganj (Gaibandha) ..	..	0·36	..	0·48	..	..	..
	Rangpur (Obsy.)	..	0·30	1·10	..	..	..	0·10
	Pirganj	0·37	0·26	..	..	..	..	..
	Kurigaon	0·03	0·18	0·83	..	..	..	0·20
	Gobindganj	..	0·35	0·60	..	..	..	..
	Bagdogra (Nilphamari) ..	0·45	0·54	..	..	..	..	..
	Ulipur	..	0·35	1·12	..	..	..	..
	Sunderganj	..	0·30	0·35	..	..	..	..
	Saidpur	0·89	0·09	..	..	..	..	..
Bogra ..	Sherpur	..	0·83	0·08	..	..	..	..
	Nowkhilla	0·51	..	..	..	..	..	..
	Bogra (Obsy.)	..	0·71	0·04	..	..	..	..
	Panchbibi	0·61	..	..	..	..	..	..
	Khetlal*							
	Adamdighi	..	0·93	..	..	..	..	..
	Dubchanchia	..	0·92	..	..	..	..	..
Pabna ..	Shazadpur	0·55	0·43	..	..	..	..	..
	Pabna	0·21	0·68	0·61	..	..	..	..
	Sirajganj (Obsy.)	..	0·50	0·22	..	..	..	0·12
	Iswardi	..	1·38	..	..	..	..	..
Malda ..	Malda (Obsy.)	..	0·51	0·05	..	..	..	0·02
	Chanchal	..	0·30	0·50	..	..	..	..
	Gazol	..	0·36	0·07	..	..	..	..
	Sibganj	1·40	..	..	..	..	..	..
	Gomastapur	..	0·76	..	..	..	..	..
	Nawabganj	0·86	0·06	..	..	..	..	..
Dacca.								
Dacca ..	Munshiganj	..	..	2·05	..	..	..	..
	Dacca	..	0·05	0·70	..	..	..	0·02
	Nawabganj	0·33	0·65	..	..	..	..	..
	Narayanganj (Obsy.) ..	..	..	0·76	..	..	..	..
	Narsingdi	..	..	0·20	..	..	..	..
	Manikganj	..	0·42	0·52	..	..	..	..
	Joydebpur	0·27	0·78	..	..	..	..	..
	Kapasia	..	0·28	0·37	..	..	..	..

*Not reported.

FOR THE MONTH OF FEBRUARY 1937.

28				Number of rainy days.	Average number of rainy days.	Total rainfall for the month.	Normal rainfall for the month.	Heaviest rainfall during the month.	Total rainfall from 1st December 1936 to 28th February 1937.	Normal rainfall from 1st December 1936 to 28th February 1937.
..				4	1·3	2·81	0·01	1·03	3·20	1·53
..				4	0·9	1·60	0·41	0·50	1·94	0·56
..				5	1·5	2·16	0·73	0·80	..	1·13
..				6	1·4	1·72	0·63	0·50	2·45	1·07
..				6	1·2	2·10	0·57	0·55	3·10	1·03
..				5	1·2	1·68	0·57	0·68	1·78	0·95
..				5	1·3	3·21	0·70	1·12	3·54	1·04
..				4	1·4	1·78	0·74	0·74	2·03	1·09
..				5	1·7	1·45	0·64	0·47	..	0·84
..					1·4		0·75			0·94
..				1	1·1	0·10	0·64	0·10	0·66	0·80
..				4	1·5	1·12	0·78	0·42	..	1·02
..				4	1·3	3·02	0·77	1·50	3·02	0·90
..				6	(n)	3·90	(n)	1·23	4·24	(n)
..				4	(n)	2·96	(n)	1·44	..	(n)
..				6	1·2	2·27	0·66	1·18	2·27	1·08
1·49				5	1·7	3·10	0·75	1·49	3·10	1·22
0·85				5	1·4	3·05	0·63	1·20	..	1·04
..				5	1·4	2·08	0·79	1·10	2·45	1·19
0·14				10	2·9	7·26	1·15	2·75	7·05	2·80
0·28				7	2·4	4·47	1·09	2·71	4·66	1·62
0·21				6	2·2	1·11	1·10	0·30	..	1·82
..				4	1·6	1·77	0·70	0·96	1·77	1·20
0·02				5	2·6	2·55	1·10	0·82	2·86	1·89
..				5	2·1	2·89	0·84	1·41	2·99	1·72
0·10				9	2·5	4·16	0·09	1·81	4·30	2·01
0·02				6	2·4	2·78	1·12	1·12	3·13	2·09
..				7	3·1	3·23	1·15	1·00	3·43	2·33
..				5	1·4	1·67	0·70	0·48	2·02	1·12
0·12				5	1·3	2·01	0·69	1·10	2·14	1·09
..				5	1·1	1·63	0·85	0·40	1·73	1·11
..				5	1·1	1·77	0·58	0·83	1·77	1·06
..				3	1·2	2·15	0·66	1·20	..	1·93
..				4	1·4	1·39	0·66	0·54	1·46	1·10
..				5	1·2	2·18	0·56	1·12	2·33	0·86
..				5	1·1	1·08	0·51	0·69	2·10	0·81
..				3	1·2	1·34	0·59	0·89	1·34	0·73
..				4	1·4	2·52	0·75	0·99	..	1·28
..				4	1·4	1·89	0·82	0·66	1·89	1·32
..				4	1·7	2·40	0·78	0·87	2·46	1·35
..				4	1·3	2·27	0·89	0·70	..	1·31
..					1·3		0·35			0·50
..				3	(n)	2·73	(n)	1·50	..	(n)
..				3	(n)	2·43	(n)	0·92	2·43	(n)
..				4	0·8	2·86	0·74	1·02	2·86	1·06
..				6	1·7	4·22	1·01	1·37	4·35	1·45
..				5	1·6	2·21	0·77	0·98	2·25	1·22
..				2	1·2	4·11	0·65	2·73	4·11	1·00
..				4	1·7	3·27	0·84	1·20	3·79	1·44
..				5	1·7	2·40	0·78	0·60	2·80	1·26
..				4	1·6	2·13	0·72	0·90	2·71	1·12
..				5	1·4	5·45	0·75	1·55	..	1·41
..				4	1·7	3·40	0·93	1·40	3·40	1·26
..				4	1·8	3·94	0·70	1·48	3·94	1·15
..				3	2·1	3·48	1·30	2·05	3·48	1·97
..				3	1·9	2·14	1·25	0·73	2·38	1·76
..				4	1·7	3·35	1·07	1·35	..	1·45
..				4	2·0	2·05	1·40	0·88	2·09	1·89
..				2	1·8	1·45	0·95	1·20	1·45	1·40
..				3	1·9	2·74	1·18	1·80	2·74	1·72
..				4	1·6	2·35	1·02	0·85	2·47	1·51
..				4	1·4	1·50	0·54	0·50	2·00	0·98

(n) Not ascertained.

DAILY RAINFALL RECORDED IN BENGAL

Division and district.	Station.	1	2	3	4	5	6	7
Dacca—*concld.*								
Mymensingh ..	Kishorganj ..	..	..	..	..	..	..	..
	Atia (Tangail) ..	..	..	..	..	..	..	..
	Sarisabari ..	..	..	..	..	..	..	..
	Mymensingh (Obsy.)	..	..	..	..	..	..	..
	Jamalpur ..	..	..	..	..	..	..	..
	Netrokona ..	..	..	..	..	..	..	..
	Pingna ..	..	..	..	..	..	..	..
	Durgapur ..	..	..	..	..	..	..	..
	Sherpur (Town) ..	..	..	..	..	..	..	..
	Dewanganj ..	..	..	..	..	..	..	..
	Nalitabari ..	..	..	..	..	..	..	..
Faridpur ..	Madaripur ..	..	..	..	..	..	..	..
	Faridpur (Obsy.) ..	..	..	..	..	..	..	..
	Rajbari (Goalundo)	..	..	..	..	..	..	..
	Haridaspur ..	..	..	..	..	..	..	..
	Takerhat ..	..	..	..	..	..	..	..
	Bhanga ..	..	..	..	..	..	..	..
	Pangsa ..	..	..	..	..	..	..	..
	Baliakandi ..	..	..	..	..	..	..	..
	Bhusna ..	..	..	..	..	..	..	..
	Palong ..	..	..	..	..	..	..	..
Bakarganj ..	Patuakhali ..	..	..	..	..	..	..	..
	Barguna* ..	..						
	Pirojpur ..	..	..	..	..	..	..	..
	Barisal (Obsy.) ..	..	..	..	..	..	..	..
	Gaurnadi ..	..	..	..	..	..	..	..
	Bhola ..	..	..	..	..	..	..	..
	Daulatkhan ..	..	..	..	..	..	..	..
	Bauphal ..	..	..	..	..	..	..	..
Chittagong.								
Chittagong ..	Cox's Bazar (Obsy.) ..	..	..	..	..	..	..	..
	Chittagong (Obsy.) ..	..	..	..	..	..	..	..
	Kutubdia ..	..	..	..	..	..	..	..
	Satkania ..	..	..	..	..	..	..	..
	Mirsarai ..	..	..	..	..	..	..	..
	Rangunia ..	..	..	..	..	..	..	..
Tippera ..	Comilla (Obsy.) ..	..	..	..	..	..	..	..
	Chandpur ..	..	..	..	..	..	..	..
	Brahmanbaria ..	..	..	..	..	..	..	..
	Ramchandrapur ..	..	..	..	..	..	..	..
	Nasirnagar* ..	..						
	Daudkandi ..	..	..	..	..	..	..	..
	Kasba ..	..	..	..	..	..	..	..
	Laksam* ..	..						
Noakhali ..	Noakhali (Obsy.) ..	..	..	..	..	..	..	..
	Feni ..	..	..	..	..	..	..	..
	Harishpur* ..	..						
	Ramganj ..	..	..	..	..	..	..	..
	Chhagalnaya ..	..	..	..	..	..	..	..
	Hatiya ..	..	..	..	..	..	..	..
	Lakshmipur ..	..	..	..	..	..	..	..
Chittagong Hill Tracts	Rangamati ..	..	..	..	..	..	..	..
	Bandarban ..	..	..	..	..	..	..	..
	Barkal ..	..	..	..	..	..	..	..
	Mahalchari ..	..	..	..	..	..	..	..
	Lama ..	..	..	..	..	..	..	..
	Ramgarh .	..	..	..	..	..	..	..
	Manikseri ..	..	..	..	..	..	..	..
	Dighinala ..	..	..	..	..	..	..	..
	Mainmukh	..	..	..	..	..	..	..
	Kaptai ..	..	..	..	..	..	..	..
	Panchhari ..	..	..	..	..	..	..	..
	Nakhyongchhari ..	..	..	..	..	..	..	..
Tripura State ..	Agartala ..	..	..	..	..	..	..	..
Cooch Behar ..	Dinhata ..	..	..	..	..	..	..	..
	Cooch Behar (Obsy.)	..	..	..	..	..	..	..
	Mickliganj ..	..	..	..	..	..	..	..
	Mathabhanga ..	..	..	..	..	..	..	..
	Fulbaria (Tufanganj)	..	..	..	..	..	..	..

*Not reported.

FOR THE MONTH OF FEBRUARY 1937.

8	9	10	11	12	13	14	15	16	17	18	19	20
..	..	0·05	..	0·15	0·46	..	..	..	..	..	..	..
..	..	..	0·26	..	..	..	..	..	..	..	..	..
..	..	..	0·40	0·65	..	..	..	..	..	0·20	..	..
..	..	..	..	0·03	0·43	..	..	..	..	..	0·04	..
..	..	..	..	0·14	0·81	..	..	..	..	..	0·25	..
..	..	..	..	..	0·60	..	..	..	..	..	0·20	..
..	..	..	..	0·33	0·65	..	..	..	..	..	0·08	..
..	..	..	..	0·28	..	..	..	..	..	..	..	0·23
..	..	..	..	0·45	0·75	..	..	..	..	..	0·34	..
..	..	..	0·12	0·82	..	..	..	..	..	0·36	..	..
..	..	..	..	0·25	0·67	..	..	..	..	..	0·22	..
..	..	0·05	..	0·25	0·49	0·13	..	..	..	..	0·06	..
..	..	0·05	..	0·10	1·34	0·05	..	..	..	..	..	..
..	..	0·04	..	0·28	1·60	..	..	..	..	..	..	..
..	0·13	..	0·20	0·50	0·04	..	..	..	..	0·11	..	..
..	..	0·06	0·14	0·60	0·07	..	..	..	..	0·06	..	..
..	..	..	..	1·34	..	..	..	..	..	..	..	..
..	..	0·15	..	0·20	0·30	..	..	..	..	..	..	..
..	..	0·02	0·06	..	1·50	..	..	..	..	..	0·01	..
..	..	..	0·90	1·13	..	..	..	..	..	0·07	..	..
..	..	..	..	0·10	0·62	0·03	..	..	..	..	0·11	..
..	..	..	..	0·97	0·17	0·77	..	..	..	..	0·04	..
..	..	0·02	..	2·29	0·31	0·69	..	..	..	..	0·11	..
..	..	0·01	..	1·38	0·34	0·43	..	..	..	..	0·08	..
..	..	..	..	0·09	0·08	..	..	..	..	0·14	..	..
..	..	..	..	0·37	0·09	0·47	..	..	..	..	0·07	..
..	..	0·02	..	..	..	..	0·30	0·05	..	0·02	..	..
..	..	..	..	..	..	..	..	..	..	..	..	..
..	..	..	..	..	..	0·04	0·02	..	..	..	0·04	..
..	..	..	..	..	..	0·07	..	..	..	..	..	..
..	..	..	..	..	..	0·04	..	..	..	..	..	..
..	..	..	..	..	..	..	..	..	..	..	..	..
..	..	..	..	0·02	0·03	0·03	..	..	..	..	..	..
..	..	..	..	..	..	..	..	..	..	..	..	..
..	..	..	..	0·03	0·49	0·12	..	..	..	..	0·04	..
..	..	..	0·04	0·20	0·15	..	..	..	..	0·11	..	..
..	..	0·05	..	0·31	..	..	..	..	..	..	0·05	..
..	..	0·05	..	0·15	0·50	..	..	..	..	..	..	..
..	..	..	..	0·10	..	..	..	..	..	..	..	..
..	..	..	..	..	..	..	..	..	..	..	..	..
..	..	0·02	..	0·16	0·10	0·22	..	..	..	..	..	..
..	..	..	..	0·04	0·05	0·13	..	..	..	..	..	..
..	..	..	..	0·10	0·15	..	..	..	..	..	..	..
..	..	..	..	0·70	0·15	..	..	..	..	..	..	..
..	..	..	0·12	..	..	..	..	..	..	0·10	..	..
..	..	..	..	0·10	0·28	..	..	..	..	..	..	..
..	..	..	..	..	..	0·13	1·78	..	..	..	..	..
..	..	..	..	..	..	..	..	..	..	..	..	..
..	..	..	..	..	0·15	0·33	..	..	..	..	0·05	..
..	..	..	..	0·04	0·13	0·31	0·02	..	..	..	..	..
..	..	..	..	..	..	..	..	..	..	..	..	..
..	..	..	..	..	..	..	..	..	..	0·09	..	..
..	..	..	..	0·08	0·33	..	..	..	..	0·05	..	..
..	..	..	0·10	0·02	0·10	0·08	..	..	..	..	0·04	..
..	..	0·22	0·02	0·12	0·33	0·73	..	..	..	0·06	..	..
..	..	..	..	..	0·07	0·05	..	..	..	..	..	..
..	..	..	..	..	..	..	..	..	..	..	..	..
..	..	..	..	..	..	..	..	..	..	..	..	..
..	0·18	..	0·28	0·71	0·10	..	..	..	..	0·68	..	..
..	..	..	..	..	..	..	..	..	..	..	0·10	0·46
..	..	..	..	..	..	0·84	..	..	..	..	0·18	0·29
..	..	0·01	..	0·01	0·08	1·07	..	..	..	..	0·28	0·46
..	..	0·06	..	..	0·07	0·82	..	..	..	..	0·27	0·37
..	..	..	..	..	0·02	0·70	..	..	..	..	0·41	0·28

DAILY RAINFALL RECORDED IN BENGAL

Division and district.	Station.	21	22	23	24	25	26	27
Dacca—*concld.*								
Mymensingh ..	Kishorganj	..	0·21	0·20	..	..	..	..
	Atia (Tangail) ..	0·29	0·23	..	..	..	..	..
	Sarisabari	0·50	..	..	..	..	..	..
	Mymensingh (Obsy.) ..	..	0·11	0·33	..	..	..	..
	Jamalpur	..	0·35	0·13	..	..	..	..
	Netrokona	..	0·18	0·17	..	..	..	..
	Pingna	..	0·61	0·12	..	..	..	..
	Durgapur	..	0·50	..	..	..	..	0·17
	Sherpur (Town)	..	0·50	0·24	..	..	..	..
	Dewanganj	..	0·60	..	..	..	..	..
	Nalitabari	..	..	0·30	..	..	..	..
Faridpur ..	Madaripur	..	..	0·96	..	..	..	0·12
	Faridpur (Obsy.)	..	0·28	0·90	..	..	..	0·07
	Rajbari (Goalundo) ..	..	0·43	0·70	..	..	..	0·02
	Haridaspur	..	..	1·34	..	..	0·25	..
	Takerhat	..	0·91	..	..	..	0·21	..
	Bhanga	..	1·20	..	..	..	1·00	..
	Pangsa	0·35	0·50	..	..	..	0·07	..
	Baliakandi	..	0·70	0·85	..	..	..	0·08
	Bhusna	..	1·00	..	..	..	..	..
	Palong	..	0·01	0·81	..	..	..	0·09
Bakarganj ..	Patuakhali	..	0·03	0·25	..	..	..	0·11
	Barguna*							
	Pirojpur	..	..	0·69	..	..	..	1·94
	Barisal (Obsy.)	..	..	0·43	..	..	..	0·16
	Gaurnadi	..	1·01	..	..	..	..	..
	Bhola	..	..	0·84	..	..	..	0·07
	Daulatkhan	..	..	..	..	..	..	..
	Bauphal	..	..	..	..	..	..	..
Chittagong.								
Chittagong ..	Cox's Bazar (Obsy.) ..	..	..	0·15	..	..	..	..
	Chittagong (Obsy.) ..	..	..	0·28	..	..	..	..
	Kutubdia	..	0·30	0·12	..	..	..	..
	Satkania	..	0·10	..	..	..	..	..
	Mirsarai	..	0·55	..	..	..	..	..
	Rangunia	..	..	..	..	..	..	..
Tippera ..	Comilla (Obsy.)	..	..	0·60	..	..	..	..
	Chandpur	0·12	0·50	..	..	..	..	..
	Brahmanbaria	..	0·09	0·44	..	..	..	..
	Ramchandrapur	..	..	0·40	..	..	..	..
	Nasirnagar*							
	Daudkandi*	..	..	..	..	..	..	..
	Kasba	..	..	..	..	..	..	..
	Laksam*							
Noakhali ..	Noakhali (Obsy.) ..	..	..	0·82	..	..	..	..
	Feni	..	..	0·60	..	..	..	..
	Harishpur*							
	Ramganj	..	..	0·56	..	..	..	..
	Chhagalnaya	..	0·46	..	..	..	..	..
	Hatiya	..	0·05	..	..	..	..	..
	Lakshmipur	..	..	0·80	..	..	..	..
Chittagong Hill Tracts	Rangamati	..	..	0·25	..	..	..	..
	Bandarban	..	..	0·60	..	..	..	..
	Barkal	..	..	0·35	..	..	..	..
	Mahalchari	..	..	0·39	..	..	..	..
	Lama	..	..	0·27	..	..	..	..
	Ramgarh	..	0·48	..	..	..	..	..
	Manikseri	..	0·40	..	..	..	..	..
	Dighinala	..	..	0·46	..	..	..	..
	Mainmukh	..	0·35	..	..	..	..	..
	Kaptai	..	0·30	..	..	..	..	..
	Panchhari	..	0·05	..	..	..	..	..
	Nakhyongchhari	..	0·21	..	..	..	..	..
Tripura State ..	Agartala	..	1·23	..	..	..	..	..
Cooch Behar ..	Dinhata	..	0·23	0·91	..	..	..	..
	Cooch Behar (Obsy.) ..	..	0·02	0·56	..	..	..	..
	Mickliganj	..	0·04	0·38	..	..	..	..
	Mathabhanga	..	0·04	0·45	0·01	..	..	..
	Fulbaria (Tufanganj) ..	..	0·04	0·45	0·02	..	..	..

*Not reported.

Dacca, the 22nd March 1937.

FOR THE MONTH OF FEBRUARY 1937.

28	29	30	31	Number of rainy days.	Average number of rainy days.	Total rainfall for the month.	Normal rainfall for the month.	Heaviest rainfall during the month.	Total rainfall from 1st December 1936 to 28th February 1937.	Normal rainfall from 1st December 1936 to 28th February 1937.
..				4	1·9	1·07	0·92	0·46	1·10	1·64
..				3	1·7	0·78	0·93	0·29	0·81	1·42
..				4	1·4	1·75	0·72	0·65	1·85	1·15
..				3	1·7	0·94	0·94	0·43	1·42	1·34
..				5	1·5	1·68	0·88	0·81	1·88	1·38
..				4	1·9	1·15	0·97	0·60	1·26	1·38
..				4	1·2	1·79	0·84	0·65	1·84	0·98
..				4	1·7	1·18	0·80	0·50	1·40	1·19
..				5	1·4	2·28	0·73	0·75	2·28	1·12
..				4	1·1	1·90	0·56	0·82	2·16	0·87
..				4	1·3	1·44	0·59	0·67	1·44	0·89
..				5	1·8	2·06	1·08	0·96	2·23	1·71
..				4	2·2	2·79	1·32	1·34	2·85	1·89
..				4	1·9	3·07	1·21	1·60	3·17	1·72
..				6	1·9	2·57	1·02	1·34	2·70	1·51
..				4	1·4	2·05	0·88	0·91	2·17	1·37
..				3	2·0	3·54	0·80	1·34	3·54	1·12
..				5	2·1	1·57	0·91	0·50	1·66	1·33
..				3	2·1	3·22	1·33	1·50	3·22	2·00
0·30				4	2·5	3·40	1·24	1·13	3·40	1·72
..				4	2·5	1·77	1·40	0·81	2·05	1·98
..				5	1·8	2·34	1·40	0·97	2·34	2·36
					1·7		1·34			1·83
..				6	1·8	6·05	1·28	2·29	6·05	2·08
..				5	1·9	2·83	1·05	1·38	2·85	1·85
..				2	1·8	1·32	1·04	1·01	1·32	1·42
..				3	1·7	1·91	0·92	0·84	1·95	1·58
..				1	1·9	0·39	0·94	0·30	0·39	1·43
..				Nil	1·7	Nil	1·00	Nil	Nil	1·80
..				1	0·8	0·25	0·49	0·15	0·35	1·15
..				1	1·3	0·35	1·03	0·28	0·35	2·01
..				2	1·0	0·46	0·65	0·30	..	1·51
..				1	0·7	0·10	0·40	0·10	0·10	1·00
..				1	1·7	0·63	0·82	0·55	0·63	1·65
..				Nil	(n)	Nil	(n)	Nil	Nil	(n)
..				3	2·0	1·28	1·18	0·60	1·30	1·70
..				5	2·2	1·12	1·09	0·50	1·12	1·75
..				2	2·1	0·94	1·19	0·44	0·94	1·91
..				3	1·6	1·10	1·01	0·50	1·10	1·34
					1·9		1·02			1·52
..				1	1·5	0·10	1·05	0·10	0·10	1·52
..				Nil	1·6	Nil	0·97	Nil	Nil	1·44
..					1·9		1·21			1·87
..				4	1·8	1·32	1·13	0·82	1·34	1·68
..				2	1·7	0·82	0·97	0·60	0·82	1·82
					1·4		0·87			1·57
..				3	1·5	0·81	1·02	0·56	..	1·49
..				3	1·7	1·31	0·95	0·70	1·31	1·47
..				2	1·8	0·27	1·01	0·12	0·27	1·55
..				3	1·7	1·18	1·05	0·80	..	1·49
..				3	1·7	2·16	1·04	1·78	2·16	1·92
..				1	1·1	0·60	0·64	0·60	0·60	1·32
..				3	1·1	0·88	0·93	0·35	0·88	1·72
..				3	0·7	0·89	0·49	0·39	0·95	0·57
..				1	0·7	0·27	0·86	0·27	0·27	0·98
..				1	0·7	0·57	0·55	0·48	0·57	0·64
..				2	(n)	0·86	(n)	0·40	0·86	(n)
..				3	(n)	0·80	(n)	0·46	0·80	(n)
..				5	(n)	1·83	(n)	0·73	..	(n)
..				1	(n)	0·42	(n)	0·30	0·42	(n)
..				Nil	(n)	0·05	(n)	0·05	0·05	(n)
..				1	(n)	0·21	(n)	0·21	0·21	(n)
..				6	1·7	3·18	1·24	1·23	3·18	1·93
..				4	1·5	1·70	0·66	0·91	1·82	1·17
..				4	1·8	1·96	0·87	0·84	2·07	1·16
0·07				4	1·4	2·33	0·79	1·07	2·37	1·19
..				4	1·6	2·09	0·67	0·82	2·25	1·03
..				4	1·7	2·01	0·81	0·70	2·04	1·25
0·09										

(n) Not ascertained.

S. ABDULLAH, for *Director of Agriculture, Bengal.*

Monthly and Annual Rainfall Table in the

NOTE.—The total and the average rainfall for all districts have been calculated

Division.	District.	Station.	January.			February.			March.		
			Number of rainy days.	Rainfall.	Normal rainfall.	Number of rainy days.	Rainfall.	Normal rainfall.	Number of rainy days.	Rainfall.	Normal rainfall.
Presidency ..	24-Parganas ..	Saugar Island (Obsy.)	1	1·01	0·30	6	1·07	1·12	Nil	0·05	1·43
		Diamond Harbour ..	1	0·74	0·55	2	1·10	1·30	Nil	0·03	1·66
		Budge-Budge ..	1	0·28	0·47	1	0·21	1·37	2	0·51	1·85
		Canning Town ..	Nil	Nil	0·39	2	0·65	0·84	Nil	Nil	1·71
		Alipore (Obsy.) ..	1	0·43	0·34	1	1·05	1·10	1	0·42	1·44
		Barrackpore ..	2	0·72	0·39	Nil	Nil	1·28	1	0·13	1·65
		Dum-Dum ..	1	0·37	0·46	1	0·13	1·12	Nil	Nil	1·49
		Barasat ..	1	0·92	0·52	1	0·10	1·28	1	0·12	1·48
		Basirhat ..	1	1·44	0·40	Nil	0·08	1·03	3	1·02	1·66
		Gosaba ..	2	0·39	(n)	2	1·29	(n)	Nil	Nil	(n)
		Total ..	9	5·91	3·82	14	4·39	10·44	8	2·28	14·37
		District average ..	1·00	0·66	0·42	1·55	0·49	1·16	0·89	0·25	1·60
	Nadia ..	Ranaghat ..	Nil	Nil	0·40	2	0·73	1·21	4	1·86	1·64
		Krishnagar (Obsy.) ..	1	0·18	0·44	1	0·38	1·20	2	1·48	1·82
		Chuadanga ..	2	1·00	0·39	2	0·37	1·11	3	1·72	1·75
		Meherpore ..	1	0·38	0·36	Nil	Nil	1·03	2	2·25	1·67
		Kushtia ..	2	0·40	0·32	Nil	Nil	0·96	2	1·85	1·50
		Haringhata ..	1	0·11	0·00	1	0·10	0·35	2	1·24	1·37
		Total ..	7	2·07	2·00	6	1·58	5·86	15	10·40	9·75
		District average ..	1·17	0·35	0·33	1·00	0·26	0·98	2·50	1·73	1·63
	Murshidabad ..	Kandi ..	2	0·27	0·39	Nil	Nil	0·92	2	0·92	1·17
		Berhampore (Obsy.)	1	0·44	0·35	Nil	0·12	0·88	2	0·91	1·07
		Lalbagh ..	1	0·40	0·33	Nil	Nil	0·70	Nil	0·08	1·02
		Azimgunj ..	1	0·62	0·42	Nil	Nil	0·71	1	0·50	0·96
		Jangipur ..	1	0·45	0·47	1	0·22	0·71	1	0·22	0·81
		Lalgola ..	1	0·48	0·47	2	0·47	0·85	1	0·38	0·91
		Akrigunj ..	1	0·51	0·42	1	0·64	0·66	1	2·57	1·02
		Patkabari ..	1	0·21	0·22	Nil	Nil	0·68	1	0·96	0·84
		Dumkal ..	1	0·32	0·33	Nil	Nil	0·70	Nil	0·03	1·32
		Kaliyanganj (Ishanpur)	1	0·41	0·31	Nil	0·05	0·82	1	1·07	1·12
		Khargram ..	1	0·41	(n)	Nil	Nil	(n)	2	0·84	(n)
		Bharatpore ..	1	0·50	(n)	Nil	0·09	(n)	Nil	0·07	(n)
		Total ..	11	4·11	3·71	4	1·50	7·63	10	7·64	10·24
		District average ..	1·10	0·41	0·37	0·40	0·15	0·76	1·00	0·76	1·02
	Jessore ..	Narail ..	1	0·22	0·51	Nil	0·04	1·24	4	2·56	1·98
		Jessore (Obsy.) ..	2	0·20	0·36	Nil	Nil	1·34	4	2·75	2·11
		Jhenida ..	1	0·20	0·40	1	0·34	1·23	5	5·66	2·09
		Magura ..	1	0·10	0·37	1	0·50	1·09	5	5·06	2·04
		Bongaon ..	1	0·45	0·35	3	0·37	1·17	4	4·28	1·81
		Total ..	6	1·17	1·99	5	1·25	6·07	22	20·31	10·03
		District average ..	1·20	0·23	0·40	1·00	0·25	1·21	4·40	4·06	2·01
	Khulna ..	Satkhira (Obsy.) ..	1	0·21	0·33	1	0·27	0·75	5	3·96	1·32
		Bagerhat ..	2	1·18	0·49	2	2·15	1·16	4	2·21	1·95
		Khulna (Obsy.) ..	3	2·79	0·47	1	0·32	0·84	4	2·44	2·40
		Kaliganj ..	2	0·50	0·59	4	0·82	1·43	1	0·20	1·80
		Nakipur ..	2	1·40	0·27	Nil	Nil	1·00	Nil	Nil	1·59
		Dumuria ..	1	0·30	0·45	3	0·47	1·31	5	1·04	1·91
		Rampal ..	2	1·56	0·46	1	0·26	1·24	4	2·85	1·94
		Kalaroa ..	1	0·35	0·45	1	0·10	0·99	5	3·02	2·45
		Paikgacha (Rarull) ..	1	0·92	0·57	1	0·18	1·20	3	2·37	1·98
		Mullahat ..	2	2·20	0·30	1	1·35	1·40	2	0·52	2·47
		Moreiganj ..	2	3·25	0·50	4	3·20	1·46	3	0·99	2·26
		Islamkati ..	1	0·38	0·45	1	0·53	1·25	4	1·52	2·32
		Total ..	20	15·04	5·33	20	9·65	14·12	40	21·12	24·39
		District average ..	1·67	1·26	0·44	1·67	0·81	1·18	3·33	1·72	2·03
Burdwan ..	Burdwan ..	Kalna ..	Nil	Nil	0·39	2	0·81	1·14	2	2·59	1·56
		Burdwan (Obsy.) ..	Nil	0·07	0·36	1	0·43	1·25	2	5·07	1·67
		Katwa ..	2	0·30	0·40	Nil	0·06	1·00	3	1·04	1·34
		Asansol (Obsy.) ..	2	0·45	0·68	1	0·86	1·04	2	0·43	1·05
		Mankar ..	3	0·41	0·43	2	0·30	0·92	4	0·81	1·32
		Mangalkot ..	Nil	0·05	0·07	Nil	Nil	0·65	2	1·90	2·35
		Royna ..	Nil	Nil	0·01	Nil	Nil	1·13	3	1·79	2·08
		Monteswar ..	Nil	Nil	0·00	Nil	Nil	1·51	2	1·48	1·60
		Total ..	7	1·28	2·34	6	2·46	8·73	20	15·11	13·06
		District average ..	0·87	0·16	0·29	0·75	0·31	1·09	2·50	1·88	1·63
	Birbhum ..	Suri ..	1	0·26	0·40	1	0·17	0·86	1	0·28	1·04
		Hetampur ..	2	0·65	0·54	Nil	Nil	0·91	Nil	0·02	0·93
		Rampurhat ..	1	0·50	0·47	Nil	0·17	0·79	1	1·05	0·89
		Bolpur ..	1	0·28	0·41	1	0·25	0·72	1	0·21	0·98
		Murarai ..	1	0·15	0·35	Nil	0·06	0·59	Nil	Nil	0·94
		Labpur ..	1	0·70	0·30	Nil	Nil	0·54	1	0·44	1·07
		Nalhati (b) ..	Nil	Nil	(n)	Nil	Nil	(n)	..	..	(n)
		Mayureswar ..	Nil	Nil	(n)	Nil	Nil	(n)	Nil	Nil	(n)
		Total ..	7	2·54	2·47	2	0·65	4·41	4	2·00	5·85
		District average ..	1·17	0·42	0·41	0·33	0·11	0·73	0·67	0·33	0·97

(b) Under repair during the month of March to May.
(n) Not ascertained

Province of Bengal for the year 1936.

using the data of only those stations for which normals are available.

April.			May			June.			July.		
Number of rainy days.	Rainfall.	Normal rainfall.	Number of rainy days.	Rainfall.	Normal rainfall.	Number of rainy days.	Rainfall.	Normal rainfall.	Number of rainy days.	Rainfall.	Normal rainfall.
1	1·40	1·14	14	12·94	4·41	19	18·92	11·54	18	8·91	14·65
Nil	Nil	1·70	15	20·29	5·40	20	15·48	11·68	21	15·16	14·78
1	0·46	2·32	15	9·11	5·93	18	15·33	12·79	15	11·69	13·85
Nil	Nil	1·95	8	17·78	5·94	15	12·93	11·87	15	21·09	12·22
1	0·25	1·89	13	9·49	5·75	23	16·00	11·90	16	10·73	12·51
2	1·36	2·09	15	7·23	5·49	21	8·59	10·42	21	14·19	12·23
1	0·36	2·15	9	10·30	5·69	21	14·98	11·38	14	14·04	12·26
Nil	Nil	2·30	10	4·80	5·55	23	6·50	10·53	15	4·55	11·44
2	0·69	2·71	15	14·71	6·06	20	8·85	12·01	16	15·76	13·58
1	0·32	(n)	11	14·05	(n)	23	10·48	(n)	16	17·07	(n)
8	4·52	18·25	114	106·65	50·22	180	117·58	104·12	151	116·12	117·52
0·89	0·50	2·03	12·67	11·85	5·58	20·00	13·07	11·57	16·78	12·90	13·06
2	0·76	2·98	10	9·67	6·17	17	5·48	10·03	18	8·78	10·75
2	1·18	2·55	10	11·20	7·00	16	7·73	10·66	20	12·86	11·08
1	0·88	2·95	12	10·94	7·47	16	8·73	10·59	17	10·04	10·24
2	0·90	3·06	11	7·89	6·17	17	10·70	10·30	18	15·09	10·56
4	1·72	2·96	13	15·06	7·40	10	9·16	10·85	19	17·69	10·15
1	0·84	2·00	11	8·00	4·18	15	8·79	7·27	15	7·55	7·07
12	6·28	16·50	67	62·76	38·39	91	50·59	59·70	107	71·96	59·85
2·00	1·05	2·75	11·17	10·46	6·40	15·17	8·43	9·96	17·83	11·99	9·97
2	1·50	1·80	10	6·63	4·83	18	12·30	10·51	17	10·50	11·72
2	0·73	1·40	11	6·73	5·51	18	9·34	10·04	21	13·35	10·85
2	0·81	1·50	9	7·09	5·55	18	8·45	10·51	22	16·80	12·07
2	0·66	1·54	11	8·82	5·19	12	8·68	10·31	13	12·98	10·91
1	0·33	1·33	8	5·72	4·79	11	6·78	10·35	17	19·51	11·18
2	0·62	1·37	9	5·01	5·09	15	7·55	10·06	20	15·84	10·94
1	0·28	1·50	10	9·78	6·04	16	9·78	11·35	15	15·88	10·77
2	1·59	1·91	11	8·06	5·64	12	6·37	9·55	18	12·67	9·02
1	0·20	1·79	8	6·75	5·64	16	10·92	10·57	13	10·51	10·52
1	0·31	1·41	10	8·43	4·67	15	7·55	11·98	20	18·71	10·00
2	0·60	(n)	9	9·75	(n)	13	8·67	(n)	19	21·75	(n)
2	0·80	(n)	10	6·79	(n)	11	8·37	(n)	17	13·62	(n)
16	7·03	15·55	97	73·02	52·95	151	87·72	105·23	176	147·25	108·07
1·60	0·70	1·56	9·70	7·30	5·30	15·10	8·77	10·52	17·60	14·73	10·81
4	3·95	3·86	14	12·24	7·19	14	8·95	12·04	10	12·24	10·69
2	2·58	3·66	12	13·62	8·08	18	12·00	12·67	18	12·04	12·20
2	0·66	3·22	13	9·74	7·24	19	9·46	12·51	16	10·94	10·38
Nil	Nil	3·98	15	12·20	8·13	13	8·31	11·48	18	11·58	10·02
2	0·56	2·96	12	11·05	6·34	14	5·65	10·81	18	14·00	11·21
10	7·75	17·68	66	58·85	36·98	78	44·37	59·51	89	60·80	55·40
2·00	1·55	3·54	13·20	11·77	7·40	15·60	8·88	11·90	17·80	12·16	11·08
2	0·61	2·85	13	13·86	8·26	17	8·66	13·90	19	14·89	11·37
2	0·45	3·58	11	10·44	7·09	14	9·88	14·14	20	12·51	14·76
3	0·83	3·27	13	10·18	10·33	16	11·20	13·88	24	14·10	11·05
2	1·68	3·77	7	7·46	7·39	21	12·69	14·62	24	20·61	17·69
1	1·21	2·58	13	16·24	5·84	15	13·11	13·31	17	8·77	12·76
4	0·87	4·04	16	12·80	7·47	12	9·82	13·08	23	16·55	15·09
3	0·53	2·91	9	11·79	7·33	14	11·61	12·60	20	10·29	14·44
2	0·35	3·57	11	16·17	8·13	16	10·76	11·47	17	14·19	13·75
1	0·36	3·72	11	12·99	7·28	13	11·31	12·71	18	13·79	14·76
Nil	Nil	5·77	8	24·61	8·53	6	14·60	14·49	11	16·52	16·28
2	0·75	4·57	14	21·14	9·20	20	15·08	15·81	24	16·05	17·45
3	1·87	3·49	11	14·24	7·25	18	9·79	11·95	17	15·98	15·06
25	9·01	44·12	137	171·92	94·10	182	138·51	161·96	234	174·25	173·46
2·08	0·75	3·68	11·42	14·33	7·84	15·17	11·54	13·50	19·50	14·52	14·46
4	1·32	2·78	10	9·09	5·65	15	6·87	10·32	16	7·43	11·23
3	0·64	2·11	10	8·64	6·13	16	9·12	10·24	22	20·17	12·57
2	0·50	1·72	12	8·64	5·41	16	9·10	10·02	21	9·79	11·13
Nil	0·08	0·78	6	2·77	3·26	16	14·44	11·71	22	19·41	13·76
1	0·65	1·43	3	3·87	4·48	15	12·35	9·60	28	19·15	11·03
2	1·57	1·61	10	6·70	5·09	9	5·90	12·86	16	9·22	8·03
2	0·90	1·56	8	6·98	4·70	18	13·55	10·86	16	6·94	11·84
Nil	Nil	0·56	10	9·92	3·73	12	7·39	12·61	20	15·28	9·17
14	5·66	12·50	69	57·51	38·45	117	78·72	88·22	161	107·39	88·86
1·75	0·71	1·56	8·62	7·19	4·81	14·62	9·84	11·03	20·13	13·42	11·11
1	0·45	1·02	9	3·78	3·82	11	9·13	10·73	23	15·71	12·88
Nil	Nil	1·06	7	3·46	3·80	15	7·12	10·35	23	18·25	12·74
1	0·15	1·35	9	10·91	4·33	15	12·51	10·57	15	17·83	11·56
2	0·53	1·06	5	4·66	3·84	11	8·75	9·43	14	12·28	11·14
1	0·45	1·19	9	14·44	5·09	12	12·71	12·23	15	18·46	14·81
3	1·60	1·41	5	6·11	4·55	16	7·16	10·59	14	7·78	11·45
..	..	(n)	..	..	(n)	8	4·37	(n)	8	4·17	(n)
Nil	Nil	(n)	5	5·04	(n)	15	13·23	(n)	15	22·25	(n)
8	3·18	7·09	44	43·36	25·43	80	57·38	63·90	104	90·31	74·58
1·33	0·53	1·18	7·33	7·23	4·24	13·33	9·56	10·65	17·33	15·05	12·43

(n) Not ascertained.

Monthly and Annual Rainfall Table in the

Division	District.	Station.	August.			September.		
			Number of rainy days.	Rainfall.	Normal rainfall.	Number of rainy days.	Rainfall.	Normal rainfall
Presidency ..	24-Parganas ..	Saugar Island (Obsy.)	17	16·65	14·18	12	8·15	10·76
		Diamond Harbour ..	14	10·09	13·73	17	12·11	10·35
		Budge-Budge ..	11	6·60	12·80	14	12·44	10·17
		Canning Town ..	10	10·68	13 48	14	15·33	9·90
		Alipore (Obsy.) ..	13	6·00	12·69	17	19·83	9·87
		Barrackpore ..	16	6·68	11·41	21	11·79	8·62
		Dum-Dum ..	20	10·60	11·81	13	12·02	9·74
		Baraset ..	20	10·85	11·62	13	13·67	9·05
		Basirhat ..	16	10·05	11·98	10	9·06	8·81
		Gosaba ..	10	9·71	(n)	15	8·05	(n)
		Total ..	137	88·20	113·70	131	114·40	87·27
		District average ..	15·22	9·80	12·63	14·55	12·71	9·70
	Nadia	Ranaghat ..	10	6·03	11·77	8	3·19	8·71
		Krishnagar (Obsy.) ..	18	11·00	10·17	15	9·96	8·03
		Chaudanga ..	8	6 00	11·08	18	10·65	8·62
		Meherpore ..	19	14·57	11·09	11	8·10	8·06
		Kushtia ..	12	11·32	10·09	10	9·98	9·05
		Haringhata ..	11	7·29	6·94	13	8·11	4·06
		Total ..	78	56·21	61·14	75	50·08	46·53
		District average ..	13·00	9·37	10·19	12·50	8·35	7·75
	Murshidabad ..	Kandi ..	19	11·11	11·24	11	9·84	9·21
		Berhampore (Obsy.)	16	7·12	11·95	17	14·88	0·12
		Lalbagh ..	11	6·28	13·11	11	11·59	10 61
		Azimgunj ..	12	6·65	11·35	11	11·21	9·14
		Jangipur ..	15	8·65	11·51	16	18·48	10·02
		Lalgola ..	13	8·10	10·66	16	14·28	9·85
		Akrigunj ..	15	8·39	9·93	18	17·67	8·69
		Patkabari ..	14	7·76	8·39	13	9·08	7·02
		Dumkal ..	8	9·06	10·77	9	(a) 6·98	9·00
		Kallyangunj (Ishanpur)	14	6·64	12·65	15	16·51	8·81
		Khargram ..	17	11·52	(n)	14	14·46	(n)
		Bharatpore ..	12	8·18	(n)	10	12·43	(n)
		Total ..	137	79·76	111·56	137	130·52	92·47
		District average ..	13·70	7·98	11·60	13·70	13·05	9·25
	Jessore .	Narail ..	15	8·37	10·23	12	8·50	7·60
		Jessore (Obsy.) ..	13	6·42	10·95	12	8·55	8·55
		Jhenida ..	15	10·33	10·99	9	14·41	9·15
		Magura ..	14	8·10	9·92	16	9·80	8·59
		Bongaon ..	15	6·48	11·65	14	9·03	9·02
		Total .	72	39·70	53·74	63	50·29	42·91
		District average ..	14·40	7·94	10·75	12·60	10·06	8·58
	Khulna	Satkhira (Obsy.) ..	20	8·49	10·65	11	9·40	8·91
		Bagerhat ..	17	12·12	12·27	14	5·73	9·32
		Khulna (Obsy.) ..	18	14·57	11·46	19	12·46	7·74
		Kaliganj ..	17	13·44	16·11	10	10·66	12·17
		Nakipur ..	10	4·20	12·29	7	5·65	9·05
		Dumuria ..	20	10·64	14·29	15	14·59	10·29
		Rampal ..	14	5·35	13·16	16	9·79	9·31
		Kalaroa ..	18	12·45	11·61	14	9·04	8·79
		Paikgacha (Rarulli) ..	11	12·59	13·69	13	9·58	10·03
		Mullahat ..	6	11·96	15·85	5	6·59	11·58
		Morelganj ..	15	8·89	14·28	12	7·01	12·02
		Islamkati ..	12	7·78	10·94	10	6·71	10·43
		Total ..	178	122·48	156·60	146	107·21	119·64
		District average ..	14·83	10·21	13·05	12·17	8·94	9·97
Burdwan ..	Burdwan	Kalna ..	12	7·11	10·70	10	9·19	7·68
		Burdwan (Obsy.) .	18	9·64	11·26	18	19·86	8·60
		Katwa ..	15	10·13	11·07	12	9·67	8·07
		Asansol (Obsy.) ..	15	9·56	11·81	16	6·80	8·36
		Mankar ..	18	12·10	11·76	13	6·22	8·87
		Mangalkot ..	15	11·91	10·33	13	9·92	7·68
		Royna ..	19	15·72	9·25	14	10·30	7·81
		Monteswar	12	6·89	15·87	15	11·79	7·90
		Total .	124	83·06	92·05	111	83·75	64·97
		District average ..	15·50	10·38	11·51	13·88	10·47	8·12
	Birbhum	Suri ..	17	13·24	12·75	16	16·07	9·57
		Hetampur ..	17	9·63	12·32	17	15·81	8·98
		Rampurhat ..	17	11·15	11·91	19	22·77	9·91
		Bolpur ..	9	9·40	10·74	10	12·54	8·00
		Murarai ..	17	20·44	12·16	16	32·84	10·83
		Labpur ..	11	5·93	11·88	10	15·46	8·82
		Nalhati (b) ..	16	6·45	(n)	1	0·50	(n)
		Mayureswar ..	18	11·26	(n)	15	16·37	(n)
		Total .	88	69·79	71·76	88	115·49	56·11
		District average ..	14·67	11·63	11·96	14·67	19·25	9·35

(a) No reading could be taken for the half of the month as the gauge was under the waters of flood.
(b) Under repair during the month of March to May. (n) Not ascertained.

Province of Bengal for the year 1936.

October.			November.			December.			Annual.		
Number of rainy days.	Rainfall.	Normal rainfall.	Number of rainy days.	Rainfall.	Normal rainfall.	Number of rainy days.	Rainfall.	Normal rainfall.	Number of rainy days.	Rainfall.	Normal rainfall
5	3·06	8·14	Nil	Nil	1·47	Nil	Nil	0·27	93	72·16	69·41
1	0·34	5·20	Nil	Nil	0·91	1	0·15	0·18	92	75·49	67·44
5	2·08	4·81	Nil	Nil	0·65	1	0·75	0·21	84	59·46	67·22
4	2·31	4·70	Nil	Nil	1·13	1	0·60	0·08	99	81·37	64·21
12	4·75	4·19	Nil	Nil	0·66	1	1·27	0·20	69	70·22	62·54
3	1·42	3·82	Nil	Nil	0·71	1	0·45	0·31	103	52·56	58·42
Nil	Nil	4·45	Nil	Nil	0·61	Nil	Nil	0·18	80	62·80	61·34
5	2·60	4·31	Nil	Nil	0·58	Nil	Nil	0·19	89	44·11	58·85
7	6·08	4·60	Nil	Nil	0·63	1	0·24	0·24	91	67·98	63·71
5	2·19	(n)	Nil	Nil	(n)	1	0·15	(n)	86	63·70	(n)
42	22·64	44·22	Nil	Nil	7·35	6	3·46	1·86	800	586·15	573·14
4·67	2·52	4·91	Nil	Nil	0·82	0·67	0·38	0·21	88·80	65·13	63·69
5	2·01	3·60	Nil	0·02	0·69	Nil	0·04	0·16	76	38·52	58·11
5	2·78	4·38	Nil	0·02	0·98	1	0·15	0·09	91	58·92	58·40
6	5·91	4·35	Nil	0·06	0·90	1	0·21	0·13	86	56·51	59·58
4	3·28	4·12	Nil	0·07	0·60	Nil	0·10	0·14	85	63·42	57·16
3	2·00	4·49	1	1·10	0·69	Nil	Nil	0·13	76	70·28	58·59
4	0·88	2·51	Nil	Nil	0·32	1	0·22	0·16	75	43·13	36·32
27	16·86	23·45	1	1·27	4·18	3	0·72	0·81	489	330·78	328·16
4·50	2·81	3·91	0·16	0·21	0·70	0·50	0·12	0·13	81·50	55·13	54·69
3	1·53	3·78	Nil	Nil	0·71	1	0·20	0·12	85	54·80	56·40
3	1·44	4·20	1	0·44	0·62	1	0·13	0·12	93	56·13	57·11
4	2·54	4·56	Nil	Nil	0·66	Nil	Nil	0·10	78	54·04	60·72
4	1·38	4·02	Nil	Nil	0·46	Nil	0·04	0·09	67	51·54	55·10
4	1·54	3·82	Nil	Nil	0·46	Nil	0·06	0·09	75	61·96	55·54
5	1·68	3·97	Nil	Nil	0·46	Nil	Nil	0·09	84	54·41	54·72
5	3·50	3·76	Nil	Nil	0·50	Nil	0·04	0·06	83	69·04	54·70
2	1·54	3·29	1	0·77	0·70	Nil	Nil	0·07	75	49·01	47·33
4	3·88	3·39	1	0·22	0·63	1	0·15	0·14	62	49·02	54·80
3	0·71	4·70	Nil	0·07	0·69	Nil	0·07	0·13	80	60·53	57·38
5	1·50	(n)	Nil	Nil	(n)	1	0·39	(n)	83	69·89	(n)
3	1·25	..	Nil	Nil	(n)	Nil	Nil	(n)	66	52·10	(n)
37	19·74	39·49	3	1·50	5·89	3	0·69	1·01	782	560·48	553·80
3·70	1·98	3·94	0·30	0·15	0·59	0·30	0·07	0·10	78·20	56·05	55·38
4	1·52	4·47	Nil	Nil	0·80	1	0·19	0·17	88	58·78	60·78
6	4·91	4·89	Nil	Nil	1·02	1	0·14	0·20	88	63·21	66·03
4	1·50	4·45	Nil	Nil	0·74	2	0·21	0·14	87	63·45	62·5[illegible]
5	2·90	4·25	1	0·15	0·78	2	0·35	0·14	91	59·05	61·6[illegible]
5	2·17	4·62	1	0·11	0·56	1	1·21	0·24	90	55·36	60·7[illegible]
24	13·00	22·68	2	0·26	3·90	7	2·10	0·89	444	299·85	311·78
4·80	2·60	4·53	0·40	0·05	0·78	1·40	0·42	0·18	88·80	59·97	62·36
9	6·89	3·23	1	0·33	0·65	1	0·14	0·27	100	67·71	62·49
10	12·88	5·13	1	0·10	0·97	Nil	Nil	0·16	97	69·65	71·02
7	3·09	3·12	1	0·13	1·07	Nil	Nil	0·43	109	72·11	66·06
6	4·33	6·94	2	0·72	0·79	1	0·60	0·11	97	73·71	83·41
5	3·53	5·13	1	0·10	0·96	Nil	Nil	0·09	71	54·21	64·87
7	3·70	4·84	1	0·77	0·81	Nil	Nil	0·12	107	71·55	73·70
8	4·89	5·19	Nil	Nil	1·06	Nil	0·03	0·13	91	58·95	69·77
5	3·05	5·32	1	0·10	0·55	Nil	Nil	0·14	91	69·58	66·[illegible]
3	2·75	6·06	Nil	Nil	0·77	Nil	0·03	0·14	75	66·87	73·0[illegible]
4	3·20	5·86	Nil	Nil	1·08	Nil	Nil	0·19	45	81·55	83·80
7	7·12	6·14	Nil	Nil	1·31	Nil	Nil	0·16	103	83·48	85·16
8	4·19	5·44	2	0·57	0·80	Nil	Nil	0·14	87	63·06	69·52
79	59·62	62·40	10	2·82	10·82	2	0·80	2·08	1,073	832·43	869·02
6·58	4·97	5·20	0·83	0·24	0·90	0·17	0·07	0·17	89·42	69·36	72·4[illegible]
6	3·18	3·74	Nil	Nil	0·86	Nil	Nil	0·15	77	48·49	5[illegible]·25
6	5·39	3·43	1	1·15	0·86	1	0·24	0·15	98	80·42	58·63
6	2·29	3·98	1	0·16	0·65	1	0·10	0·12	91	51·78	55·00
5	4·43	4·56	Nil	0·09	0·69	1	0·57	0·24	86	59·89	57·04
6	4·02	2·87	1	0·11	0·68	2	0·36	0·12	96	60·35	53·51
3	2·17	5·13	Nil	Nil	1·03	1	0·20	0·01	71	49·54	54·84
4	2·76	5·78	1	0·60	0·89	Nil	Nil	0·16	85	59·54	56·07
3	2·05	5·62	Nil	Nil	0·26	Nil	Nil	0·00	74	54·80	58·92
39	26·29	35·11	4	2·11	5·92	6	1·47	0·95	678	464·81	451·16
4·88	3·29	4·39	0·50	0·27	0·74	0·75	0·18	0·12	84·75	58·10	56·40
7	2·93	3·40	Nil	Nil	0·42	1	0·58	0·07	88	62·60	56·96
6	2·96	3·18	Nil	Nil	0·49	1	0·15	0·08	88	58·05	55·38
5	2·70	3·78	1	0·20	0·48	Nil	0·05	0·10	84	79·99	56·14
3	2·16	3·32	1	0·30	0·55	Nil	Nil	0·05	58	51·36	50·24
Nil	Nil	3·65	Nil	Nil	0·45	Nil	Nil	0·05	71	99·55	62·34
5	2·28	3·91	Nil	Nil	0·58	Nil	Nil	0·04	66	47·46	55·14
Nil	Nil	(n)	Nil	Nil	(n)	Nil	Nil	(n)	33	15·49	(n)
3	3·90	(n)	Nil	Nil	(n)	1	0·45	(n)	72	72·50	(n)
26	13·03	21·24	2	0·50	2·97	2	0·78	0·39	455	399·01	336·20
4·34	2·17	3·54	0·33	0·09	0·50	0·33	0·13	0·07	75·83	66·50	56·03

(n) Not ascertained.

Monthly and Annual Rainfall Table in the

Division.	District.	Station.	January.			February.			March.		
			Number of rainy days.	Rainfall.	Normal rainfall.	Number of rainy days.	Rainfall.	Normal rainfall.	Number of rainy days.	Rainfall.	Normal rainfall.
Burdwan ..	Bankura ..	Bankura (Obsy.) ..	Nil	0·07	0·51	2	0·92	1·04	1	0·75	1·25
		Vishnupur ..	1	0·19	0·37	Nil	0·16	1·21	Nil	0·14	1·39
		Maliara ..	1	0·13	0·47	3	0·69	0·96	2	0·67	0·99
		Khatra	1	0·18	0·44	2	0·42	1·09	Nil	0·06	1·18
		Indas	Nil	Nil	0·36	Nil	0·08	1·00	2	2·01	1·32
		Kotalpur.. ..	1	0·20	0·85	Nil	Nil	1·10	4	3·79	1·68
		Onda	1	0·50	0·31	2	0·46	1·06	1	0·25	0·98
		Gangajalghati ..	1	0·11	0·43	2	0·57	0·88	2	0·46	1·12
		Raipur ..	1	0·40	0·48	1	0·32	1·27	1	0·24	1·41
		Sonamukhi ..	1	0·30	0·42	1	0·10	1·21	2	1·10	1·37
		Taldangra ..	1	0·53	0·33	Nil	Nil	0·84	1	0·25	1·05
		Saranga	1	0·51	0·40	Nil	Nil	0·79	1	0·24	0·92
		Indpur	1	0·19	0·30	4	1·03	0·87	1	0·89	1·04
		Arhara	2	0·53	(n)	1	0·22	(n)	2	0·90	(n)
		Barjora	2	0·50	(n)	Nil	0·02	(n)	2	0·90	(n)
		Simlapal ..	1	0·25	(n)	2	1·10	(n)	1	0·20	(n)
		Mejhia	2	0·87	(n)	Nil	0·20	(n)	3	0·44	(n)
		Sironmanipur ..	1	0·43	(n)	Nil	Nil	(n)	4	1·50	(n)
		Palasdanga ..	1	0·25	(n)	1	1·47	(n)	3	1·41	(n)
		Chatna(c) ..	Nil	0·12	(n)	2	0·76	(n)	2	0·49	(n)
		Ranibandh	1	0·75	(n)	1	0·88	(n)	1	0·10	(n)
		Saltora	Nil	Nil	(n)	2	0·27	(n)	2	0·29	(n)
		Joypur	Nil	Nil	(n)	Nil	Nil	(n)	1	0·50	(n)
		Ambikanagar ..	Nil	Nil	(n)	Nil	Nil	(n)	Nil	Nil	(n)
		Joyrampur ..	1	0·26	(n)	1	0·12	(n)	2	3·50	(n)
		Total ..	11	3·31	5·17	17	4·75	13·32	18	10·85	15·70
		District average ..	0·85	0·25	0·40	1·31	0·37	1·02	1·38	0·83	1·21
	Midnapore ..	Contai ..	1	0·68	0·46	3	1·12	1·29	1	0·32	1·38
		Tamluk ..	Nil	0·05	0·39	1	0·57	1·17	3	2·15	1·78
		Midnapore (Obsy.) ..	Nil	Nil	0·46	1	0·61	1·20	2	0·89	1·43
		Ghatal ..	Nil	Nil	0·36	1	0·91	0·95	1	1·03	1·65
		Kukrahati ..	1	0·52	0·49	2	1·53	1·19	Nil	Nil	1·67
		Amlagura ..	Nil	0·07	0·41	1	0·89	1·13	2	0·37	1·61
		Panskura ..	1	0·55	0·49	1	0·45	1·18	3	1·09	1·58
		Dantan ..	1	0·42	0·47	2	1·35	1·19	1	0·31	1·52
		Chandrakona ..	Nil	Nil	0·21	1	1·24	1·07	Nil	Nil	1·47
		Pachet ..	1	0·69	0·27	2	3·42	0·95	1	0·21	2·18
		Bhagwanpore ..	Nil	Nil	0·27	2	0·50	1·03	1	0·18	1·75
		Kashiary ..	1	0·10	0·29	1	2·18	1·17	1	0·45	2·03
		Nayabasan ..	1	1·12	0·47	2	0·97	0·65	1	0·22	0·89
		Silda (Belpahari) ..	1	0·60	0·39	Nil	0·06	1·05	1	0·31	1·15
		Goaltore ..	1	0·35	0·28	1	0·13	0·82	Nil	0·06	1·08
		Salboni ..	2	0·27	0·02	Nil	Nil	0·88	Nil	Nil	0·96
		Narayangarh ..	Nil	Nil	0·65	1	1·06	0·89	2	0·50	1·35
		Ramnagar ..	Nil	0·08	0·33	6	1·79	0·98	1	0·27	1·69
		Mohanpur ..	1	0·14	0·29	1	0·20	0·93	Nil	Nil	2·37
		Jenka (Khajri) ..	1	0·05	0·21	2	1·36	0·83	1	0·12	1·49
		Nandigram ..	1	0·20	0·34	4	2·15	0·99	Nil	Nil	1·90
		Moyna ..	Nil	Nil	0·11	1	0·60	1·49	Nil	Nil	1·69
		Pingla ..	Nil	Nil	0·17	3	0·75	2·25	1	0·34	1·89
		Narajole ..	Nil	Nil	0·19	1	1·20	1·50	2	0·20	2·93
		Kolaghat (Dainan) ..	1	0·20	(n)	1	0·59	(n)	2	1·04	(n)
		Balichak ..	Nil	Nil	(n)	Nil	0·07	(n)	1	0·20	(n)
		Jhargram ..	Nil	Nil	(n)	1	0·35	(n)	1	0·18	(n)
		Kharagpur ..	Nil	Nil	(n)	Nil	0·11	(n)	1	0·33	(n)
		Total ..	14	6·49	8·02	40	25·04	26·78	25	9·02	39·44
		District average ..	0·58	0·27	0·33	1·67	1·04	1·12	1·04	0·38	1·64
	Hooghly ..	Serampore ..	1	0·55	0·38	Nil	0·07	1·21	1	0·33	1·43
		Hooghly ..	1	0·48	0·34	1	0·20	1·21	3	3·01	1·51
		Arambagh ..	1	0·66	0·40	Nil	Nil	1·07	2	0·47	1·40
		Chanditala ..	1	0·60	(n)	1	0·70	(n)	2	0·70	(n)
		Tentulia ..	Nil	Nil	(n)	2	0·87	(n)	3	4·83	(n)
		Boinchee ..	Nil	Nil	(n)	1	0·12	(n)	2	2·76	(n)
		Khanakul ..	1	0·28	(n)	1	0·69	(n)	1	0·30	(n)
		Tarakeswar ..	2	0·45	(n)	Nil	Nil	(n)	2	0·50	(n)
		Total ..	8	1·69	1·12	1	0·27	3·49	6	3·81	4·34
		District average ..	1·00	0·56	0·37	0·33	0·09	1·16	2·00	1·27	1·45
	Howrah ..	Howrah ..	1	0·21	0·40	Nil	0·11	1·11	1	1·27	1·36
		Uluberia ..	1	0·28	0·42	2	1·12	1·11	2	0·33	1·44
		Amta ..	Nil	Nil	0·41	Nil	Nil	1·40	2	1·15	2·41
		Total ..	2	0·49	1·23	2	1·23	3·71	5	2·75	5·21
		District average ..	0·67	0·16	0·41	0·67	0·41	1·24	1·66	0·92	1·74
Rajshahi	Boalia ..	Boalia (Obsy.) ..	1	0·50	0·35	2	0·40	0·58	1	0·10	1·20
		Nator ..	1	0·35	0·47	Nil	0·09	0·74	1	0·38	1·00
		Naogaon ..	1	0·29	0·35	1	0·28	0·71	1	0·46	1·01
		Lalpur ..	1	0·40	0·32	Nil	Nil	0·78	Nil	0·13	1·16
		Manda ..	1	0·46	0·43	Nil	Nil	0·57	1	0·50	0·70
		Mahadebpur ..	1	0·10	0·39	1	0·12	0·67	1	0·62	0·85
		Tanor (d)	..	..	0·58	..	..	0·52	..	..	0·74
		Chaugram ..	1	0·12	(n)	Nil	Nil	(n)	2	0·49	(n)
		Joari ..	2	0·50	(n)	Nil	Nil	(n)	Nil	0·05	(n)
		Badalgachi ..	2	0·60	(n)	Nil	Nil	(n)	2	0·40	(n)
		Total ..	6	2·10	2·89	4	0·89	4·57	5	2·19	6·60
		District average ..	1·00	0·35	0·41	0·66	0·15	0·65	0·83	0·37	0·95

(c) Irregular recording; so the figures were not taken into account. (n) Not ascertained.
(d) Out of order.

Province of Bengal for the year 1936.

April.			May.			June			July.		
Number of rainy days.	Rainfall.	Normal rainfall.	Number of rainy days.	Rainfall.	Normal rainfall.	Number of rainy days.	Rainfall.	Normal rainfall.	Number of rainy days.	Rainfall.	Normal rainfall.
1	0·14	1·32	10	4·68	4·84	15	14 12	11·09	18	13·21	13·11
2	1·20	1·57	8	5·72	4·76	15	12 53	10·02	20	13·50	11·68
1	0·38	1·05	6	3·65	3·83	16	15·05	10·06	21	17·75	11·64
1	0·82	1·26	10	5·34	3·86	17	11·84	11 01	18	16·16	12·13
2	1·12	1·76	11	8·06	5·26	20	12·33	9·36	18	18·53	11 25
Nil	Nil	2·00	7	5·37	5·19	11	8·87	10·02	18	18·46	12·89
1	0·25	1·13	5	3·23	3·06	17	14·05	8·20	21	18·35	9·68
2	0·51	1·09	8	3·13	3·57	15	13·44	10·62	21	19 80	11·37
1	0·34	1·59	9	4·13	5·12	14	13·65	10·18	21	16·12	12·22
1	1·36	1·34	5	3·13	4·78	15	9·86	9·77	23	23·23	12·43
1	0·62	0·96	9	6·60	3·18	16	20·41	8·40	16	18·48	10·64
2	0·93	1·60	7	3·87	5·64	14	10·61	11·05	19	11·95	9·93
1	0·19	0·74	8	4·83	3·89	15	14·12	8·78	22	14·62	10·19
1	0·37	(n)	8	2·81	(n)	17	12·55	(n)	16	12·72	(n)
2	0·71	(n)	7	3·52	(n)	15	10·67	(n)	18	15·96	(n)
2	0·55	(n)	14	8·00	(n)	17	17·83	(n)	22	13·30	(n)
1	0·16	(n)	4	2·02	(n)	14	11·05	(n)	17	10·87	(n)
1	0·58	(n)	8	4·63	(n)	14	9·81	(n)	21	15·19	(n)
1	0·38	(n)	6	2·71	(n)	18	10·43	(n)	21	16·19	(n)
Nil	Nil	(n)	5	3·02	(n)	18	13·26	(n)	20	15·15	(n)
1	0·30	(n)	8	4·73	(n)	20	14·69	(n)	28	23·09	(n)
1	0·33	(n)	9	3·29	(n)	18	7·05	(n)	18	18·73	(n)
Nil	Nil	(n)	9	5·84	(n)	16	13·71	(n)	18	13·60	(n)
Nil	Nil	(n)	13	6·09	(n)	17	10·29	(n)	13	6·36	(n)
1	1·14	(n)	10	8·83	(n)	11	19·90	(n)	17	11·28	(n)
16	7·86	17·41	103	61·74	56·98	200	170·88	128·56	256	220·22	149·16
1·23	0·61	1·34	7·92	4·75	4·38	15·39	13·15	9·89	19·69	16·94	11·47
Nil	Nil	1·33	15	16·44	5·12	21	21·84	10·48	16	10·79	13·26
2	0·56	1·72	15	22·15	5·03	16	11·39	10·62	16	12·27	12·41
2	0·91	1 87	13	7·94	5·32	16	16·39	10·50	22	13·23	12·53
1	0·35	2·02	13	7·93	5·28	15	13·77	10·13	15	8·73	12·20
1	0·40	1·48	13	19·66	5·43	17	13·14	12·31	16	15·08	13·40
2	1·00	1·97	10	6·53	4·71	17	17·57	10·34	23	16·62	11·79
2	1·30	2·02	15	11·58	5·58	19	14·72	10·92	20	12·86	11·79
1	0·61	1·94	15	12·25	4·83	17	18·13	10·44	15	6·59	10·85
1	2·03	1·78	9	5·35	4·96	15	13·89	12 58	21	17·39	12·15
Nil	0·08	1·27	14	9·36	5·22	17	12·16	11·82	12	8·01	12·46
2	0·38	2·14	12	10·80	4·91	18	12·37	14·26	14	8·71	10·90
2	5·24	1·69	15	16·46	4·82	16	27·95	10·64	16	15·88	10·28
2	1·30	1·58	13	10·84	5·68	16	13·95	10·65	19	9·16	10 23
1	0·55	2·21	11	7·19	4·66	17	12·19	10·67	21	14·37	10·69
2	1·17	1·88	8	4·37	5·01	17	10·55	10·81	19	10·78	11·18
2	2·43	1·45	9	6·86	4·77	17	11·65	12·30	15	9·00	10·54
2	2·50	2·73	16	10·71	8·54	17	11·78	13·27	16	8·68	12·95
Nil	0·04	1·04	12	16·64	5·19	20	21·67	13·87	16	10·71	9·64
Nil	Nil	1·44	13	9·85	5·39	19	12·01	11·01	14	4·51	12·40
1	0·62	1·50	16	17·15	5·46	17	18·27	14·85	16	12·73	10·85
1	0·10	1·43	11	17·00	5·11	17	12·77	13·78	13	9·16	10·60
Nil	Nil	1·61	10	11·59	5·39	22	29·09	11·28	15	14·24	12·18
Nil	Nil	1·43	14	12·76	5·33	13	15·57	11·83	17	16·00	10·79
6	4·00	2·30	15	4·70	5·07	19	8·60	14 62	18	9 90	12·21
1	0·43	(n)	13	8·47	(n)	16	12·75	(n)	16	10·87	(n)
3	0·76	(n)	15	9·12	(n)	15	13·14	(n)	16	10·55	(n)
3	4·15	(n)	8	10·56	(n)	19	18·06	(n)	20	14·27	(n)
3	0·69	(n)	11	7·04	(n)	17	13·31	(n)	17	8·18	(n)
33	25·57	41·89	307	277·01	127·71	415	371·42	283·98	405	275·35	278·46
1·38	1·07	1·75	12·79	11·54	5·32	17·29	15·48	11·83	16·88	11·47	11·60
2	0·69	2·17	10	7·10	5·20	19	8·73	9·94	17	9·37	12·05
3	0·98	2·37	15	13·44	6·00	15	8·40	9·87	16	12·13	10·97
Nil	0·08	1·96	12	6·37	5·53	18	11·25	9·90	16	11·45	12·51
Nil	Nil	(n)	12	8·18	(n)	20	12·93	(n)	17	16·26	(n)
2	0·20	(n)	9	7·98	(n)	13	7·88	(n)	13	10·73	(n)
3	1·27	(n)	10	7·47	(n)	16	10·62	(n)	21	12·82	(n)
Nil	Nil	(n)	12	9·24	(n)	16	8·81	(n)	14	10·35	(n)
2	0·55	(n)	16	9·25	(n)	18	12·60	(n)	17	9·27	(n)
5	1·75	6·50	37	26·91	16·73	52	28·38	29·71	49	32·95	35·[illegible]
1·67	0·58	2·17	12·33	8·97	5·58	17·33	9·46	9·90	16·34	10 99	11·84
Nil	Nil	2·03	14	10·67	5·03	20	16·17	11·21	18	12·04	12·14
1	0·45	2·03	14	17·34	5·46	19	20·29	11·20	20	15·06	12·48
1	0·40	2·47	10	9·28	6·11	15	14·20	12·54	16	17·74	12·47
2	0·85	6·53	38	37·29	16·60	54	50·66	34·95	54	44·84	37·09
0·67	0·28	2·18	12·07	12·43	5·53	18·00	16·89	11·65	18·00	14 95	12·36
1	0·17	1·78	10	8·12	5·57	21	14·43	11·17	17	13·91	10·81
1	0·27	2·29	8	6·79	7·02	14	8·54	11·10	13	13·30	12·22
2	0·53	1·53	9	12·17	6·04	10	5·24	12·76	16	13·64	11·92
Nil	Nil	2·19	10	7·87	6·63	13	7·61	10·92	10	9·84	11·41
1	0·30	1·38	8	6·57	5·26	7	4·24	10 99	13	14·14	12·38
2	0·60	1·25	10	6·76	5 63	12	5·85	11·80	16	17·19	11·97
..	..	1·27	..	..	5·10	..	..	10·35	..	..	10·63
Nil	Nil	(n)	7	5·97	(n)	18	14·04	(n)	18	21·04	(n)
Nil	Nil	(n)	11	13·55	(n)	13	14·05	(n)	14	10 38	(n)
2	0·60	(n)	9	8·00	(n)	6	4·10	(n)	16	19·[illegible]	(n)
7	1·87	11·69	55	48·28	41·25	77	43·91	79 09	85	82 03	81·34
1·17	0·31	1·67	9·17	8·05	5·89	12 83	7·32	11·30	14·17	13 67	11·62

(n) Not ascertained.

Monthly and Annual Rainfall Table in the

Division.	District	Station.	August.			September.		
			Number of rainy days.	Rainfall	Normal rainfall	Number of rainy days.	Rainfall.	Normal rainfall.
Burdwan ..	Bankura	Bankura (Obsy.) ..	15	14·15	11·47	13	6·93	8·74
		Vishnupur .	18	13·90	12·56	15	9·07	8·68
		Mallara .. .	8	8·38	11·06	13	5·88	7·45
		Khatra	15	9·27	11·67	10	2·98	8·97
		Indas	17	10·52	10·14	14	9·11	8·43
		Kotalpur.. .	15	7·43	11·66	13	8·90	8·22
		Onda	16	13·09	10·11	10	5·37	7·80
		Gangajalghati .	16	11·80	10·96	11	6·82	7·89
		Raipur	20	13·31	12·24	11	6·65	8·93
		Sonamukhi ..	16	13·29	11·37	11	9·52	8·47
		Taldangra	18	16·71	10·33	11	10·29	7·11
		Saranga .	16	8·16	12·36	13	9·93	7·59
		Indpur . ..	16	11·85	11·08	11	5·80	7·21
		Arhara . ..	15	10·24	(n)	11	4·59	(n)
		Barjora ..	15	7·86	(n)	13	6·17	(n)
		Simlapal ..	19	8·20	(n)	12	6·85	(n)
		Mejhia	15	4·74	(n)	15	10·14	(n)
		Siromanipur ..	17	9·37	(n)	13	8·51	(n)
		Palasdanga ..	18	7·89	(n)	13	5·52	(n)
		Chatna(c) ..	.	..	(n)	.	.	(n)
		Ranibandh	17	13·25	(n)	8	2·85	(n)
		Saltora .. .	15	8·33	(n)	10	4·86	(n)
		Joypur	20	15·09	(n)	9	6·15	(n)
		Ambikanagar ..	13	4·84	(n)	8	4·22	(n)
		Joyrampur ..	18	13·09	(n)	16	12·56	(n)
		Total	206	151·86	147·01	156	97·25	105·49
		District average	15·85	11·68	11·31	12·00	7·48	8·12
	Midnapore	Contai .	15	21·81	12·54	10	8·73	10·90
		Tamluk .	12	10·71	12·62	11	7·16	8·96
		Midnapore (Obsy.) ..	18	8·53	12·22	11	6·26	8·75
		Ghatal ..	11	2·89	12·67	15	6·88	9·39
		Kukrahati ..	15	8·48	12·12	12	12·81	9·73
		Amlagura ..	18	15·87	12·82	14	7·42	8·75
		Panskura .	14	9·30	11·30	13	10·14	8·71
		Dantan ..	17	9·40	11·47	14	7·93	8·75
		Chandrakona ..	10	4·50	11·81	9	6·90	8·89
		Pachet	13	8·71	11·38	12	6·91	9·21
		Bhagwanpore	14	10·01	11·41	14	13·36	7·88
		Kashiary .	9	9·06	10·68	7	6·35	7·67
		Nayabasan ..	22	15·34	9·18	12	9·18	7·15
		Sikda (Belpahari) ..	17	13·37	11·09	13	4·09	8·62
		Goaltore .	14	8·92	11·15	12	8·17	8·27
		Salboni .	14	8·95	8·80	9	4·90	8·16
		Narayangarh .	13	12·87	11·00	9	7·10	7·92
		Ramnagar	15	18·03	11·40	9	4·67	10·14
		Mohanpur ..	19	4·60	10·05	10	3·15	9·73
		Jenka (Khajri) ..	16	10·71	12·55	12	8·02	9·67
		Nandigram ..	12	9·18	10·92	13	8·81	9·06
		Moyna ..	23	27·95	10·62	12	17·26	7·74
		Pingla ..	13	11·93	10·44	11	4·16	7·35
		Narajole ..	18	7·60	13·59	21	6·20	9·26
		Kolaghat (Dainan) ..	18	8·33	(n)	13	8·42	(n)
		Balichak ..	16	8·23	(n)	12	4·06	(n)
		Jhargram ..	15	9·59	(n)	14	14·93	(n)
		Kharagpur .	15	8·54	(n)	13	4·26	(n)
		Total ..	362	268·72	273·83	285	186·56	210·66
		District average ..	15·08	11·20	11·41	11·88	7 77	8·78
	Hooghly ..	Serampore ..	10	4·85	11·06	10	12·55	8·77
		Hooghly ..	15	8·70	10·72	13	17·12	8·12
		Arambagh ..	15	8·78	12·44	14	10·36	8·74
		Chanditala ..	12	5·92	(n)	7	6·73	(n)
		Tentulia ..	9	7·02	(n)	11	10·13	(n)
		Boinchee ..	11	7·65	(n)	13	11·30	(n)
		Khanakul ..	12	6·00	(n)	13	8·11	(n)
		Tarakeswar ..	15	8·84	(n)	12	8·71	(n)
		Total ..	40	22·33	34·22	37	40·03	25·63
		District average	13 33	7·44	11·41	12·33	13·34	8·54
	Howrah ..	Howrah ..	13	7·21	11·52	16	14·38	8 98
		Uluberia ..	14	5·98	11·78	13	8·20	7·92
		Amta	18	5·73	12·19	14	10·04	8·24
		Total ..	45	18·92	35·49	43	32·62	25·14
		District average .	15·00	6·31	11·83	14·33	10·87	8·38
Rajshahi	Boalia	Boalia (Obsy.) ..	18	10·98	10 32	13	8·57	10·04
		Nator ..	15	7·30	11·47	13	8·95	10 60
		Naogaon ..	11	5·46	10·56	13	14·46	11·01
		Lalpur	9	6·73	11 31	7	4·38	10·27
		Manda	13	4·18	10·31	11	9·60	9·99
		Mahadebpur ..	7	6·15	11·86	13	14·96	10·74
		Tanor (d) ..	.	.	9·41	..	..	7·29
		Chaugram ..	17	13 89	(n)	20	18·13	(n)
		Joari	16	10 05	(n)	17	17·80	(n)
		Badalgachi .	15	16·80	(n)	12	17·20	(n)
		Total ..	73	40·80	75·24	70	60·02	69·94
		District average .	12 17	6·80	10·75	11·67	10·15	9·99

(c) Irregular recording : so the figures were not taken into account.
(n) Not ascertained
(d) Out of order.

Province of Bengal for the year 1936.

October.			November.			December			Annual.		
Number of rainy days.	Rainfall.	Normal rainfall.	Number of rainy days.	Rainfall	Normal rainfall	Number of rainy days.	Rainfall.	Normal rainfall.	Number of rainy days.	Rainfall.	Normal rainfall.
4	3·16	2·01	1	1·44	0·64	2	0·44	0·08	82	60·01	57·00
5	5·80	3·05	1	0·65	0·61	1	0·50	0·13	86	63·42	56·03
2	4 32	2 99	1	0·45	0 44	1	0·28	0·11	75	57·63	51·06
5	4·47	3·30	Nil	0·07	0·70	1	0·25	0·17	80	51·86	55·78
5	3 39	2·79	1	1·55	0·62	Nil	0·02	0·10	90	66·72	52·30
6	3·14	3·31	1	0 45	0·75	1	0·40	0·10	77	57·01	57·27
4	3·61	2·83	1	0·91	0·45	Nil	0 06	0·08	79	60·13	45·69
3	3 78	2·75	1	0·21	0·60	1	0·38	0·08	83	60·06	51·36
6	5·84	3·61	1	2·25	0·67	1	0·12	0·15	87	63·37	57·87
4	1·15	3·07	1	1·42	0·71	1	0·12	0·10	81	64·58	55·04
5	9·38	5·23	Nil	Nil	0·82	1	1·55	0·00	79	84·82	48·80
6	4·13	4·23	Nil	Nil	0·91	1	0·16	0 00	80	50·49	55·42
6	3·28	5·01	Nil	Nil	0·60	1	0·40	0·00	86	57·20	49·80
4	3·25	(n)	1	1·23	(n)	1	0·52	(n)	79	49·93	(n)
7	2·10	(n)	1	0·35	(n)	1	0 40	(n)	83	49·16	(n)
4	3·52	(n)	1	0·55	(n)	1	0·35	(n)	96	60·70	(n)
5	5·08	(n)	1	0·55	(n)	1	0·33	(n)	78	46·45	(n)
4	2·36	(n)	Nil	Nil	(n)	1	0·20	(n)	84	52·58	(n)
4	0·98	(n)	1	0·50	(n)	2	0·44	(n)	89	48 17	(n)
		(n)	..	..	(n)	Nil	Nil	(n)	47	32·80	(n)
5	4 49	(n)	1	0·25	(n)	Nil	0·07	(n)	91	65·45	(n)
4	1·20	(n)	1	0·29	(n)	2	0·63	(n)	77	45·27	(n)
3	2·64	(n)	Nil	Nil	(n)	Nil	Nil	(n)	76	57·53	(n)
6	2·12	(n)	8	3·16	(n)	6	1·91	(n)	84	38·99	(n)
2	4·75	(n)	1	1·20	(n)	Nil	0·07	(n)	80	76·65	(n)
61	55·40	45·08	9	9 40	8 61	12	4 68	1·10	1,065	798·20	693·59
4·69	4·26	3·47	0·69	0·72	0·66	0·92	0·36	0·08	81·92	61·40	53·35
8	3·97	7·01	Nil	0·02	1·27	Nil	0·09	0·23	90	85·81	65·27
2	1·32	4·35	Nil	Nil	0·66	1	0·70	0·18	79	69 03	59·89
6	4·86	3·64	Nil	Nil	0·88	Nil	Nil	0·25	91	59·62	59·05
5	2·39	3·44	Nil	Nil	0·71	1	0·52	0·19	78	45·40	58·99
7	3·88	5·04	Nil	Nil	0 90	1	0 54	0·08	85	76·04	68·93
6	7·10	3·36	Nil	Nil	0·87	Nil	Nil	0·16	93	73·44	57·92
8	1·94	3·65	Nil	Nil	1·06	1	1·10	0·16	97	65·03	58·44
7	4·72	4·91	Nil	Nil	1·04	Nil	0 04	0·13	90	61·75	57·54
4	1·69	3·83	Nil	Nil	0·80	Nil	Nil	0·34	70	52 99	59·89
7	3·50	5·31	Nil	Nil	0 80	1	0·41	0 05	80	53·46	60·92
7	2·56	5·79	1	0·31	0·88	1	0·50	0·14	86	59·68	61·36
2	4·30	5·86	Nil	Nil	1·10	Nil	Nil	0·05	70	87·97	56·28
7	5·66	3·61	Nil	Nil	2·17	Nil	0·05	0·33	95	67·79	52·59
4	1·27	3·88	1	0·37	0·67	Nil	Nil	0·10	87	54·37	55·18
6	5·10	4·63	Nil	0·03	0·60	1	0·13	0·18	81	49·71	55·89
5	4·23	4·16	Nil	Nil	1·25	Nil	Nil	0·21	73	48·29	53·50
3	1·58	5·46	1	0·34	1·70	1	0·75	0·23	81	57·87	66·69
4	4·53	8·66	Nil	Nil	1·78	1	0·73	0·03	84	79·16	64 75
4	1·50	7·87	Nil	Nil	1·08	Nil	Nil	0·01	81	35·96	62·57
5	2·80	7·27	Nil	Nil	1·55	1	0·37	0·06	88	72·80	66·35
7	6·62	6·92	Nil	Nil	1·05	1	0·50	0·03	80	67 39	62·22
3	1·35	5·21	Nil	Nil	1·21	Nil	Nil	0·02	86	102 08	58·55
5	1·48	5·21	Nil	Nil	0·69	Nil	Nil	0·01	77	62·99	57·39
12	2·60	6·39	3	0·90	0·98	Nil	Nil	0·15	115	45·90	70·09
4	1·21	(n)	Nil	Nil	(n)	1	0·27	(n)	86	52·58	(n)
5	1·18	(n)	1	0·23	(n)	1	0·11	(n)	85	47 65	(n)
3	3·02	(n)	Nil	Nil	(n)	Nil	Nil	(n)	84	75·11	(n)
6	4·89	(n)	Nil	Nil	(n)	Nil	Nil	(n)	88	47·35	(n)
134	80·95	125·46	6	1·97	25·70	11	6·43	3·32	2,037	1,534·53	1,445·25
5·58	3·37	5·23	0·25	0·08	1·07	0·46	0·27	0·14	84·88	63·94	60·22
6	1·25	4·09	Nil	Nil	0·61	1	0·75	0·20	77	46·24	57·11
5	1 39	3·87	Nil	0·08	0·66	1	0·28	0·27	88	66 21	55·91
7	2·90	3·77	Nil	Nil	0·56	1	0·30	0·15	86	52·62	58·43
3	2·43	(n)	Nil	Nil	(n)	1	0·40	(n)	76	54·79	(n)
5	3·84	(n)	Nil	Nil	(n)	1	0·15	(n)	68	53·61	(n)
4	2·14	(n)	1	0·15	(n)	Nil	0·05	(n)	82	56·35	(n)
5	2·64	(n)	Nil	Nil	(n)	1	0·50	(n)	76	46·92	(n)
6	2·50	(n)	1	0·70	(n)	1	0·15	(n)	92	53·52	(n)
18	5·54	11·73	Nil	0·08	1·83	3	1·33	0·62	251	165·07	171·45
6·00	1·85	3·91	Nil	0·03	0·61	1·00	0·44	0·21	83·66	55·02	57·15
9	3·04	4·27	Nil	Nil	0·52	1	1·10	0·19	93	66·20	58·76
7	2·98	3·81	Nil	Nil	0·68	1	0·75	0·15	94	72·78	58·48
3	1·44	4·39	Nil	Nil	0·75	1	0·70	0·24	80	60·68	63·71
19	7·46	12·47	Nil	Nil	1·95	3	2·55	0·58	267	199·66	180·95
6·33	2·49	4·16	Nil	Nil	0·65	1·00	0·85	0·19	89·00	66·56	60·32
3	3·75	3·78	Nil	Nil	0·49	Nil	Nil	0·06	87	60·93	56·10
3	3·75	4·21	Nil	Nil	0·52	Nil	0·03	0·08	69	47·75	61·72
6	2 90	4·37	Nil	Nil	0·58	1	0·24	0·09	71	55·67	60·93
4	2·01	3·87	Nil	Nil	0 70	1	0 19	0·10	55	39·16	59·66
5	4·58	4·01	Nil	Nil	0·44	Nil	Nil	0·02	60	44·57	56·48
4	2·96	4·43	Nil	Nil	0·44	Nil	Nil	0·09	67	55·31	60·12
	..	5·04	..		0·36			0·08	..	..	51·37
2	1·93	(n)	Nil	Nil	(n)	Nil	Nil	(n)	85	75·61	(n)
5	3 20	(n)	Nil	Nil	(n)	Nil	Nil	(n)	78	69·58	(n)
4	3·50	(n)	Nil	Nil	(n)	1	0·15	(n)	69	70·35	(n)
25	19·95	20·66	Nil	Nil	3·53	.. 2	0·46	0·52	409	303·39	406.38
4·17	3·32	4·24	Nil	Nil	0·50	0·33	0·08	0·07	68·17	50·57	58·04

(n) Not ascertained.

Monthly and Annual Rainfall Table in the

Division.	District	Station	January			February			March		
			Number of rainy days	Rainfall	Normal rainfall	Number of rainy days	Rainfall	Normal rainfall	Number of rainy days	Rainfall	Normal rainfall
Rajshahi ..	Dinajpur ..	Nithpur .	1	0 40	0 62	Nil	0 04	0 91	2	0 75	0 60
		Nawabganj	Nil	Nil	0 15	Nil	0 14	0 41	1	0 13	0 62
		Gangarampur	Nil	Nil	0 25	Nil	Nil	0 73	Nil	Nil	0 70
		Itahar	1	0 12	0 35	Nil	0 05	0·63	Nil	0 09	0 61
		Raiganj	Nil	Nil	0 35	Nil	Nil	0 57	Nil	Nil	0 77
		Dinajpur (Obsy)	Nil	0 04	0 32	Nil	Nil	0 57	2	0 49	0 75
		Balurghat	1	0 22	0 36	1	0 10	0 70	3	0 93	0 78
		Thakurgaon	Nil	Nil	0 30	Nil	Nil	0 74	2	2 18	0 92
		Setabganj	Nil	0 04	0 14	Nil	Nil	0 64	2	1 69	0 96
		Ramganj (e)			0 18			0 75			0 77
		Atwari	Nil	Nil	0 14	Nil	Nil	0 64	Nil	Nil	1·42
		Birganj	Nil	Nil	0 17	Nil	Nil	0 78	4	1·29	0 92
		Parbatipur	Nil	Nil	0 10	Nil	Nil	0 77	2	2 50	0 90
		Patnitola	2	0 63	(n)	1	0 12	(n)	3	1 14	(n)
		Sapahar	1	0 20	(n)	Nil	Nil	(n)	3	2 52	(n)
		Total ..	3	0 82	3 43	1	0 33	8 84	18	10 05	10 72
		District average .	0 25	0 07	0 26	0 08	0 03	0 68	1 50	0 84	0 82
	Jalpaiguri .	Jalpaiguri (Obsy) .	Nil	0 01	0 30	1	0 17	0 66	3	1 37	1 36
		Alipore Duars .	1	0 55	0 31	1	0 13	0 75	3	3 51	1 89
		Falakata	1	0 36	0 26	1	0 27	0 63	5	4 63	1 31
		Debiganj	1	0 19	0 35	1	0 26	0 79	2	0 25	1 05
		Buxa (f) .	1	0 31	1 00	2	0 71	1 15	6	3 80	2 99
		Kalchini ..	1	0 11	0 34	Nil	0 05	1 09	4	2 34	2 00
		Kumargram ..	Nil	Nil	0 40	2	1 15	1 10	1	2·80	2 48
		Total	4	1 22	2 98	6	2 03	6 17	18	14 90	13 08
		District average	0 67	0 20	0 43	1 00	0 34	0 88	3 00	2 48	1 87
	Darjeeling	Siliguri .	1	0 12	0 38	1	0 26	0 70	6	2 52	1 24
		Darjeeling (Obsy.)	Nil	Nil	0 55	8	2 18	1 10	5	4 22	1 84
		Kalimpong (Obsy.)	Nil	Nil	0 57	4	1 19	0 84	2	0·56	1 48
		Mongpoo	Nil	Nil	0 54	7	1 59	1 09	7	5 02	1 85
		Kurseong .	Nil	Nil	0 67	4	1 05	1 12	4	0 83	1 84
		Pedong	Nil	Nil	0 65	7	2 35	1 15	3	1 40	2 00
		Total .	1	0 12	3 36	31	8 62	6 00	27	14 55	10 25
		District average	0 17	0 02	0 56	5 17	1 44	1 00	4 50	2 42	1 71
	Rangpur .	Bhawaniganj (Gaibandha)	Nil	0 08	0 32	Nil	0 16	0 70	2	1 38	1 21
		Rangpur (Obsy)	Nil	Nil	0 34	1	0 66	0 69	2	2 05	1 13
		Pirganj	Nil	Nil	0 14	Nil	Nil	0 85	2	2 10	0 69
		Kurigaon	Nil	Nil	0 36	3	1 37	0 58	4	2 32	1 63
		Gobindganj .	Nil	0 09	0 20	Nil	Nil	0 66	2	1 40	1 10
		Bagdogra (Nilphamari)	Nil	0 01	0 35	1	0 60	0 66	2	0 50	1 11
		Ulipur	Nil	Nil	0 24	1	0 10	0 56	1	0 81	1 20
		Sunderganj	1	0 11	0 21	Nil	0 08	0 51	1	0 40	1 38
		Saidpur	Nil	Nil	0 07	Nil	Nil	0 59	2	1 80	1 02
		Total	1	0 29	2 23	6	2 97	5 80	17	12 76	10 47
		District average	0 11	0 03	0 25	0 67	0 33	0 64	1 80	1 42	1 16
	Bogra .	Sherpur .	1	0 27	0 40	Nil	Nil	0 75	2	1 08	1 09
		Nowkhilla	Nil	Nil	0 38	Nil	Nil	0 82	2	1 03	1 18
		Bogra (Obsy) .	1	0 32	0 38	Nil	0 05	0 78	1	0 55	1 24
		Panchbibi	1	0 18	0 32	Nil	Nil	0 89	3	0 63	0 97
		Khetlal	Nil	Nil	0 15	Nil	Nil	0 35	Nil	Nil	0 53
		Adamdighi .	Nil	Nil	(n)	Nil	Nil	(n)	1	0 55	(n)
		Dubchanchia .	1	0 27	(n)	Nil	0 07	(n)	1	0 66	(n)
		Total	3	0 77	1 63	Nil	0 05	3 59	8	3 29	5 01
		District average	0 60	0 15	0 33	Nil	0 01	0 72	1 60	0 66	1 00
	Pabna	Shazadpur ..	2	0 35	0 08	1	0 24	0 74	2	0 48	1 73
		Pabna ..	1	0 27	0 32	1	0 35	1 01	2	0 59	1 36
		Sirajganj (Obsy)	1	0 26	0 32	Nil	0 02	0 77	2	0 61	1 33
		Iswardi .	2	0 55	0 05	Nil	0 05	0 65	2	2 98	0 96
		Total ..	6	1 43	0 77	2	0 66	3 17	8	4 66	5 38
		District average .	1 50	0 36	0 19	0 50	0 16	0 79	2 00	1 17	1 35
	Malda .	Malda (Obsy) .	1	0 23	0 55	1	0 14	0 84	1	0 36	0 71
		Chanchal	1	0 37	0 43	Nil	0 09	0 78	1	0 10	0 62
		Gazol ..	1	0 19	0 35	Nil	Nil	0 72	1	0 21	0 66
		Sibganj ..	2	0 68	0 58	Nil	Nil	0 75	1	0 25	0 64
		Gomastapur .	1	0 36	0 23	Nil	0 08	0 93	1	0 20	0 76
		Nawabganj .	1	0 55	0 35	Nil	0 08	0 70	1	0 22	1 01
		Total .	7	2 38	2 49	1	0 39	4 72	6	1 34	4 40
		District average ..	1 16	0 40	0 41	0 16	0 07	0 79	1 00	0 22	0 73

(e) Out of order (n) Not ascertained

Province of Bengal for the year 1936.

April			May			June			July		
Number of rainy days	Rainfall	Normal rainfall	Number of rainy days	Rainfall	Normal rainfall	Number of rainy days	Rainfall	Normal rainfall	Number of rainy days	Rainfall	Normal rainfall
4	1 27	0 96	8	5 36	4 88	13	3 82	11 27	16	14 52	12 25
3	0 78	1 96	13	11 06	7 13	3	2 27	15 13	21	23 07	15 56
4	1 44	1 65	9	4 44	6 03	7	3 09	12 91	16	10 25	15 60
2	0 86	1 37	9	4 79	4 59	13	4 54	11 56	17	12 67	13 87
1	0 50	1 41	9	6 10	5 59	9	6 45	12 77	14	9 35	14 75
3	2 07	2 14	13	11 66	7 59	12	7 83	14 05	16	19 71	15 50
3	2 62	1 64	13	10 75	6 73	13	7 66	11 98	22	25 01	13 18
3	1 39	2 11	12	9 35	7 60	9	10 39	17 00	18	21 41	19 05
3	3 14	1 84	9	12 95	6 60	8	6 15	15 12	17	21 26	15 55
		2 07			6 19			16 00			15 81
Nil	Nil	3 23	1	1 15	7 87	12	19 43	20 85	19	33 80	25 31
4	4 07	2 16	10	13 19	8 13	11	10 24	16 60	20	14 53	17 03
1	1 70	2 69	12	10 93	8 28	12	7 16	14 71	20	19 38	16 33
3	1 84	(n)	9	11 39	(n)	10	4 27	(n)	15	20 74	(n)
1	0 57	(n)	8	7 68	(n)	9	4 83	(n)	14	12 93	(n)
31	19 84	25 23	118	101 73	87 21	122	89 03	189 95	216	224 96	210 69
2 59	1 65	1 94	9 83	8 48	6 71	10 17	7 42	14 61	18 00	18 74	16 21
6	4 17	3 73	16	18 23	11 07	21	37 34	23 73	25	28 18	31 28
6	2 38	5 87	14	11 58	14 61	23	29 62	30 66	24	36 58	32 97
5	3 23	4 26	15	12 32	11 88	19	20 33	23 66	22	33 74	28 43
6	4 87	3 17	16	9 98	9 50	13	15 37	19 95	13	23 46	19 98
7	8 11	8 30			19 60	..		39 00	15	30 35	50 36
9	7 41	6 08	19	18 77	15 20	22	25 54	28 73	23	34 58	35 36
4	8 84	7 41	9	14 35	16 74	12	19 54	32 91	21	27 09	43 20
36	30 90	38 82	89	85 18	98 60	110	147 74	198 84	128	183 63	241 53
6 00	5 15	5 55	14 83	14 20	14 08	18 33	24 62	28 41	21 34	30 60	34 50
5	3 22	3 60	23	23 80	10 79	19	23 05	25 40	24	33 88	33 40
10	4 85	3 85	17	11 27	8 70	23	15 65	24 26	25	33 50	32 31
5	3 52	2 94	14	8 86	5 53	15	13 27	17 48	24	26 23	23 90
8	7 61	4 28	18	18 79	9 16	21	21 77	26 06	24	42 13	31 08
7	5 41	4 02	21	18 08	11 81	24	16 52	32 87	25	40 33	43 60
12	4 66	5 15	16	10 99	8 94	23	15 08	19 70	27	27 51	24 42
47	29 27	23 84	109	91 79	54 93	125	105 34	145 77	149	203 58	188 71
7 83	4 88	3 97	18 17	15 30	9 15	20 83	17 55	24 30	24 83	33 93	31 45
5	3 76	2 97	12	15 91	9 81	10	4 36	15 47	18	26 01	13 15
3	2 83	3 09	11	11 22	10 93	9	7 29	17 61	17	27 93	15 26
2	0 86	3 10	11	8 37	9 90	6	3 21	16 52	15	16 77	15 75
8	8 17	4 33	16	18 31	13 66	17	10 28	22 20	23	29 61	16 09
2	1 54	2 72	6	8 57	8 33	11	4 44	14 31	15	18 64	14 04
6	5 71	3 00	14	12 20	9 63	14	12 46	19 85	19	26 66	17 18
5	7 14	4 05	13	21 07	12 98	12	11 05	18 95	17	37 94	14 08
4	2 35	3 47	13	15 99	10 54	15	9 60	15 88	18	26 09	14 97
3	2 33	2 28	11	10 43	9 58	9	5 83	15 90	19	26 43	16 71
38	34 60	29 01	107	122 07	95 36	103	68 52	156 69	161	236 08	137 23
4 22	3 86	3 22	11 89	13 56	10 60	11 44	7 61	17 41	17 89	26 23	15 25
5	2 64	2 40	13	9 33	7 58	15	7 23	11 78	16	15 76	12 22
4	1 12	2 47	11	10 62	8 94	13	6 05	13 43	16	22 08	12 22
3	1 76	2 27	11	10 43	8 50	12	5 00	14 03	17	13 37	13 06
4	1 54	2 07	12	7 44	7 28	12	6 75	11 90	20	15 82	12 70
Nil	Nil	2 14	4	3 11	5 16	6	1 45	8 45	15	11 87	10 16
Nil	Nil	(n)	8	13 37	(n)	11	3 31	(n)	15	15 26	(n)
3	1 68	(n)	11	7 98	(n)	9	3 79	(n)	15	15 51	(n)
16	7 06	11 35	51	40 93	37 46	58	26 48	59 59	84	78 90	60 36
3 20	1 41	2 27	10 20	8 19	7 50	11 60	5 30	11 92	16 80	15 78	12 07
1	0 21	2 90	12	10 78	6 40	15	8 81	10 60	15	12 12	10 49
4	0 84	3 11	12	13 77	7 46	17	8 29	11 33	15	12 40	10 76
4	2 37	3 31	12	12 76	7 88	14	10 66	12 41	17	15 28	11 49
2	0 25	2 20	12	8 78	6 35	16	10 10	10 96	16	14 93	9 52
11	3 67	11 52	48	46 09	28 09	62	37 86	45 30	63	54 73	42 26
2 75	0 92	2 88	12 00	11 52	7 02	15 50	9 47	11 32	15 75	13 68	10 57
2	0 94	1 13	7	5 00	4 50	12	3 50	10 35	16	15 11	10 97
2	0 41	1 10	6	5 75	4 82	11	10 01	11 37	18	29 25	13 38
2	0 90	1 16	6	3 86	4 36	9	3 15	10 36	17	14 90	13 60
2	0 61	1 10	4	2 56	5 01	7	2 90	9 72	12	14 56	11 10
2	0 44	1 34	8	4 48	4 41	11	4 74	10 48	17	19 14	12 02
Nil	0 03	1 40	9	5 84	4 64	11	3 07	11 78	18	20 82	11 10
10	3 33	7 23	40	27 49	27 74	61	27 37	64 06	98	113 78	72 62
1 67	0 56	1 21	6 67	4 58	4 62	10 17	4 56	10 68	16 33	18 96	12 10

(f) Under repair during the months of May and June

(n) Not ascertained.

Monthly and Annual Rainfall Table in the

Division	District	Station	August			September		
			Number of rainy days	Rainfall	Normal rainfall	Number of rainy days	Rainfall	Normal rainfall
Rajshahi ..	Dinajpur	Nithpur	13	8 49	11 19	13	14 80	9 89
		Nawabganj	17	8 61	14 39	13	11 11	11·05
		Gangarampur	17	16 63	14 05	11	16 50	11 0
		Itahar	13	8 65	13 02	16	19 27	11 5
		Raiganj	12	11 00	14 18	15	18 55	10 82
		Dinajpur (Obsy.)	14	10 59	13 35	17	12 15	12 30
		Balurghat	10	19 23	12 36	19	24 69	10 51
		Thakurgaon	14	14 78	17 07	14	12 09	14 74
		Setabganj	16	8 99	15 50	13	13 25	11 95
		Ramganj (e)			15 46			13 56
		Atwari	19	14 04	21 07	16	16 42	16 63
		Birganj	16	11 62	13 85	12	9 99	11 99
		Parbatipur	20	10 46	14 53	17	11 65	11 00
		Patnitola	10	11 41	(n)	15	23 73	(n)
		Sapahar	13	8 47	(n)	16	25 16	(n)
		Total	181	143 09	190 02	176	180 47	157 03
		District average	15·08	11 92	14 62	14 57	15 04	12 08
	Jalpaiguri	Jalpaiguri (Obsy.)	21	28 78	25 04	14	17 76	19 94
		Alipore Duars	20	29 79	25 39	16	21 58	22 86
		Falakata	20	23 72	22 72	17	21 11	18 16
		Debiganj	15	16 70	16 68	11	12 38	14 68
		Buxa (f)	22	45 82	44 03	19	23 57	31 18
		Kalchini	24	37 47	31 38	15	16 37	21 05
		Kumargram	19	40 21	29 04	13	23 48	25 59
		Total	119	176 67	194 28	86	112 68	153 42
		District average	19 84	29 45	27·75	14 33	18 78	21 92
	Darjeeling	Siliguri	22	16 70	27 47	15	21 12	21 44
		Darjeeling (Obsy.)	25	24 37	26 12	22	28 67	18 38
		Kalimpong (Obsy.)	21	18 31	19 04	13	18 19	12 52
		Mongpoo	20	23 88	25 93	19	27 18	18 11
		Kurseong	26	30 30	34 42	21	37 56	24 47
		Pedong	24	20 77	22 09	24	18 48	14 77
		Total	138	134 33	155 07	114	151 20	109 69
		District average	23 00	22 39	25 85	19 00	25 20	18 28
	Rangpur ..	Bhawaniganj (Gaibandha).	15	13 50	12 05	12	10 79	12 10
		Rangpur (Obsy.)	17	13 94	13 63	12	11 55	13 74
		Pirganj	16	10 72	13 62	10	9 61	13 02
		Kurigaon	11	10 71	12 21	10	11 13	14 34
		Gobindganj	19	18 48	13 97	10	9 66	13 39
		Bagdogra (Nilphamari)	12	8 47	15 69	14	14 04	14 59
		Ulipur	14	12 14	13 07	11	13 81	13 89
		Sunderganj	18	14 02	12 27	12	9 04	13 21
		Saidpur	10	10 88	14 84	13	12 04	11 68
		Total	132	112 86	121 35	104	101 67	119 96
		District average	14 67	12 54	13 48	11 56	11 30	13 33
	Bogra ..	Sherpur	17	11 38	12 11	16	18 36	10 27
		Nowkhilla	14	9 99	12 25	12	12 44	10 75
		Bogra (Obsy.)	18	6 18	13 29	15	13 52	11 67
		Panchbibi	17	16 39	11 85	14	12 76	11 35
		Khetlal	8	3 43	8 18	9	10 16	8 04
		Adamdighi	13	8 00	(n)	11	13 74	(n)
		Dubchanchia	14	6 97	(n)	10	12 92	(n)
		Total	74	47 37	57 68	66	67 24	52 08
		District average	14 80	9 47	11 54	13 20	13 45	10 42
	Pabna ..	Shazadpur	14	14 65	12 27	11	6 35	7 91
		Pabna	17	13 47	10 63	13	10 63	9 12
		Sirajganj (Obsy.)	17	9 09	11 50	17	11 01	9 71
		Iswardi	15	14 23	10 51	15	11 01	8 54
		Total	63	51 44	44 91	56	39 00	35 28
		District average	15 75	12 86	11 23	14 00	9 75	8 82
	Malda ..	Malda (Obsy.)	15	9 71	11 52	19	26 44	10 79
		Chanchal	15	12 74	12 34	14	24 45	10 38
		Gazol	12	10 58	12 98	19	27 05	10 96
		Sibganj	11	6 62	10 18	18	17 73	9 17
		Gomastapur	10	9 26	10 62	17	23 84	7 60
		Nawabganj	13	4 75	11 83	10	9 63	8 76
		Total	76	53 66	69 47	97	129 14	57 66
		District average	12 67	8 94	11 58	16 17	21 52	9 61

(n) Not ascertained (e) Out of order.
(f) Under repair during the months of May and June.

Province of Bengal for the year 1936.

October.			November.			December.			Annual		
Number of rainy days.	Rainfall.	Normal rainfall	Number of rainy days.	Rainfall.	Normal rainfall.	Number of rainy days.	Rainfall.	Normal rainfall.	Number of rainy days.	Rainfall.	Normal rainfall
4	2·85	4·60	Nil	Nil	0·32	1	0·39	0·00	75	52·69	57·49
6	3·69	5·01	Nil	Nil	0·18	2	0·34	0·00	79	61·20	71·59
4	3·35	4·18	Nil	Nil	0·13	Nil	Nil	0·15	68	55·70	67·40
3	5·13	3·22	Nil	Nil	0·26	2	0·78	0·09	76	56·90	61·14
5	5·62	3·40	Nil	Nil	0·19	1	1·00	0·11	66	58·57	64·01
2	5·51	4·25	Nil	Nil	0·22	1	0·10	0·06	80	70·15	71·10
6	5·44	4·45	Nil	Nil	0·32	2	0·33	0·08	93	96·98	63·09
4	7·99	4·09	Nil	Nil	0·19	1	0·25	0·05	77	79·83	84·76
3	6·75	3·72	Nil	Nil	0·16	1	0·10	0·06	72	74·32	72·24
..	..	3·74	..	..	0·25	..	..	0·01	..	..	74·79
Nil	Nil	3·48	Nil	Nil	0·00	1	0·56	0·02	68	85·40	100·66
3	6·48	4·85	Nil	Nil	0·80	Nil	Nil	0·07	80	71·41	76·85
6	2·60	5·05	Nil	Nil	0·33	Nil	Nil	0·03	90	66·38	74·72
4	3·86	(n)	Nil	Nil	(n)	2	0·34	(n)	74	79·47	(n)
4	3·57	(n)	Nil	Nil	(n)	Nil	Nil	(n)	69	65·43	(n)
46	55·41	54·04	Nil	Nil	2·85	12	3·80	0·73	924	829·53	940·74
3·83	4·62	4·16	Nil	Nil	0·22	1·00	0·32	0·06	77·00	69·13	72·37
4	4·36	4·90	Nil	Nil	0·20	Nil	Nil	0·11	111	140·37	122·32
3	4·51	5·15	Nil	Nil	0·26	Nil	Nil	0·14	111	140·23	140·86
2	2·80	4·29	1	0·10	0·30	Nil	0·05	0·11	108	122·66	116·23
2	3·95	3·83	Nil	Nil	0·17	1	0·37	0·05	81	87·73	90·15
8	5·84	9·97	3	1·82	0·90	3	0·69	0·61	86	121·02	209·09
3	3·25	6·19	1	0·11	0·64	1	0·19	0·15	122	146·19	148·21
3	4·39	8·15	Nil	Nil	0·56	3	1·87	0·22	87	143·72	167·80
17	23·26	42·48	2	0·21	3·03	5	2·48	1·39	620	780·90	994·66
2·83	3·88	6·07	0·33	0·04	0·43	0·83	0·41	0·20	103·33	130·15	142·09
5	4·17	6·08	Nil	0·07	0·43	Nil	Nil	0·10	121	128·91	131·03
6	5·84	4·54	Nil	0·11	0·78	1	0·31	0·24	142	130·97	122·67
3	2·67	3·15	Nil	Nil	0·62	Nil	0·10	0·27	101	92·90	88·34
4	3·50	3·94	Nil	Nil	0·65	Nil	0·14	0·31	128	151·61	123·00
6	3·13	5·69	Nil	Nil	0·49	1	0·35	0·26	139	153·56	161·26
5	3·98	3·71	Nil	0·01	0·78	1	0·16	0·44	142	105·39	103·75
29	23·29	27·11	Nil	0·19	3·70	3	1·06	1·62	773	763·34	730·05
4·83	3·88	4·52	Nil	0·03	0·62	0·50	0·18	0·27	128·83	127·22	121·68
5	6·76	5·73	Nil	Nil	0·30	2	0·35	0·09	81	83·06	73·90
4	11·15	5·36	Nil	Nil	0·21	Nil	0·13	0·04	76	88·75	82·03
7	6·26	5·80	Nil	Nil	0·46	1	0·10	0·10	70	58·00	79·95
6	9·11	5·29	Nil	Nil	0·24	Nil	Nil	0·10	97	101·01	91·03
5	3·15	5·53	Nil	Nil	0·43	Nil	Nil	0·06	70	65·97	74·74
5	9·27	4·16	Nil	Nil	0·14	Nil	0·07	0·08	87	89·90	86·44
6	10·22	6·67	Nil	Nil	0·33	1	0·15	0·06	81	114·43	86·08
6	8·91	6·35	Nil	Nil	0·33	1	0·12	0·07	89	86·71	79·19
4	10·31	4·76	Nil	Nil	0·23	Nil	Nil	0·05	71	80·05	77·71
48	75·14	49·65	Nil	Nil	2·67	5	0·92	0·65	722	767·97	731·07
5·33	8·35	5·52	Nil	Nil	0·30	0·55	0·10	0·07	80·22	85·33	81·23
3	2·45	4·44	Nil	Nil	0·60	Nil	Nil	0·12	88	68·50	63·76
4	2·44	5·13	Nil	Nil	0·52	Nil	Nil	0·11	76	65·77	68·20
3	3·67	4·96	Nil	Nil	0·74	Nil	0·06	0·05	81	54·91	70·97
4	4·50	4·93	Nil	Nil	0·31	3	0·94	0·09	90	66·95	64·66
Nil	Nil	4·20	Nil	Nil	0·28	Nil	Nil	0·00	42	30·02	47·64
3	4·00	(n)	Nil	Nil	(n)	Nil	Nil	(n)	62	58·23	(n)
Nil	Nil	(n)	Nil	Nil	(n)	Nil	Nil	(n)	64	49·85	(n)
14	13·06	23·66	Nil	Nil	2·45	3	1·00	0·37	377	286·15	315·23
2·80	2·61	4·73	Nil	Nil	0·49	0·60	0·20	0·07	75·40	57·23	63·06
5	3·15	5·17	1	0·33	0·24	Nil	Nil	0·13	79	57·47	58·66
4	3·32	4·42	1	1·29	0·57	Nil	0·13	0·11	87	65·35	60·20
5	3·62	4·94	Nil	Nil	0·62	Nil	0·04	0·11	89	65·72	64·39
4	3·57	4·94	1	0·75	0·55	Nil	Nil	0·18	85	67·20	55·41
18	13·66	19·47	3	2·37	1·98	Nil	0·17	0·53	340	255·74	238·66
4·50	3·42	4·87	0·75	0·59	0·50	Nil	0·04	0·13	85·00	63·94	59·67
4	3·74	4·34	Nil	Nil	0·35	1	0·52	0·05	79	65·69	56·10
3	4·75	2·80	Nil	Nil	0·26	1	0·40	0·05	72	88·32	58·78
5	4·50	3·53	Nil	Nil	0·32	1	0·58	0·05	73	65·92	59·05
3	5·48	3·57	Nil	Nil	0·50	Nil	Nil	0·08	60	51·39	52·40
4	3·68	4·79	Nil	Nil	0·54	Nil	Nil	0·10	71	66·22	53·82
5	4·82	4·01	Nil	Nil	0·56	Nil	Nil	0·10	68	49·81	56·24
24	26·97	23·04	Nil	Nil	2·53	3	1·50	0·43	423	387·35	326·39
4·00	4·50	3·84	Nil	Nil	0·42	0·50	0·25	0·07	70·50	64·56	56·06

(n) Not ascertained.

Monthly and Annual Rainfall Table in the

Division.	District.	Station.	January			February.			March.		
			Number of rainy days.	Rainfall.	Normal rainfall.	Number of rainy days.	Rainfall.	Normal rainfall.	Number of rainy days.	Rainfall.	Normal rainfall.
Dacca ..	Dacca	Munshiganj ..	Nil	Nil	0·46	1	1·70	1·30	4	4·43	2·98
		Dacca ..	1	0·20	0·34	1	1·63	1·25	2	1·94	2·63
		Nawabganj ..	1	0·12	0·17	1	2·35	1·07	3	6·42	3·29
		Narayanganj (Obsy.)	Nil	0·08	0·30	1	2·43	1·40	4	3·09	2·69
		Narsingdi ..	2	0·31	0·18	2	0·81	0·95	4	3·40	3·55
		Manikganj ..	1	0·25	0·39	1	1·20	1·18	2	1·66	1·85
		Joydebpur ..	1	0·25	0·36	1	0·20	1·02	5	2·40	2·31
		Kapasia ..	2	0·91	0·30	1	0·20	0·54	4	1·28	1·79
		Total ..	8	2·12	2·50	9	10·52	8·71	28	24·62	21·09
		District average ..	1·00	0·26	0·31	1·13	1·32	1·09	3·50	3·08	2·64
	Mymensingh ..	Kishorganj ..	1	0·25	0·53	1	0·42	0·92	5	1·95	2·56
		Atia (Tangail) ..	2	0·52	0·39	1	0·14	0·93	3	1·14	1·39
		Sarisabari ..	1	0·30	0·17	2	0·50	0·72	2	1·13	1·17
		Mymensingh (Obsy.)	1	0·12	0·33	Nil	0·05	0·94	4	4·41	2·09
		Jamalpur ..	2	0·26	0·37	1	0·45	0·88	2	2·31	1·39
		Netrokona ..	Nil	0·08	0·29	1	0·20	0·97	2	2·99	2·40
		Pingna ..	1	0·32	0·09	Nil	0·05	0·84	2	1·07	1·21
		Durgapur ..	1	0·35	0·35	1	0·75	0·80	4	4·03	2·11
		Sherpur (Town) ..	1	0·18	0·35	1	0·10	0·73	3	2·21	1·63
		Dewanganj ..	1	0·18	0·28	Nil	0·05	0·56	3	4·15	1·38
		Nalitabari ..	1	0·20	0·26	Nil	Nil	0·59	3	4·60	1·59
		Total ..	12	2·76	3·41	8	2·71	8·88	38	29·99	18·92
		District average ..	1·09	0·25	0·31	0·73	0·25	0·81	3·00	2·73	1·72
	Faridpur ..	Madaripur ..	1	0·96	0·46	4	1·67	1·08	3	0·95	2·36
		Faridpur (Obsy.) ..	2	0·43	0·45	1	1·25	1·32	4	1·62	2·33
		Rajbari (Goalundo) ..	1	0·22	0·39	1	1·28	1·21	4	3·05	2·06
		Haridaspur ..	1	0·50	0·27	1	0·35	1·02	5	1·91	1·91
		Takerhat ..	1	0·51	0·21	3	0·98	0·88	5	1·29	1·69
		Bhanga ..	Nil	Nil	0·15	2	0·80	0·80	1	0·30	2·14
		Pangsa ..	1	0·50	0·20	1	0·45	0·91	6	3·56	2·20
		Ballakandi ..	2	0·90	0·24	1	0·58	1·33	5	3·55	2·96
		Bhusna ..	Nil	Nil	0·26	2	0·54	1·24	3	3·70	2·02
		Palong ..	1	0·38	0·30	3	1·58	1·40	4	1·20	3·22
		Total ..	10	4·46	2·93	19	9·48	11·19	40	21·13	22·89
		District average ..	1·00	0·45	0·29	1·90	0·95	1·12	4·00	2·11	2·29
	Bakarganj ..	Patuakhali ..	3	3·93	0·54	1	0·90	1·40	2	1·98	2·09
		Barguna ..	3	1·11	0·29	Nil	0·02	1·34	2	1·15	2·05
		Pirozpur ..	2	0·81	0·53	5	4·31	1·28	1	1·55	1·67
		Barisal (Obsy.) ..	3	2·02	0·41	4	1·81	1·05	2	0·51	2·22
		Gaurnadi ..	3	0·82	0·22	1	0·10	1·04	3	0·91	2·44
		Bhola ..	2	0·69	0·33	2	1·07	0·92	2	0·89	2·11
		Daulatkhan ..	3	1·25	0·24	4	2·46	0·94	Nil	Nil	2·07
		Bauphal ..	2	1·96	0·41	2	0·44	1·00	Nil	Nil	1·68
		Total ..	21	12·59	2·97	19	11·11	8·97	12	6·99	16·33
		District average ..	2·62	1·57	0·37	2·37	1·39	1·12	1·50	0·87	2·04
Chittagong ..	Chittagong ..	Cox's Bazar (Obsy.) ..	3	1·16	0·15	2	0·85	0·49	1	0·12	1·28
		Chittagong (Obsy.) ..	3	0·81	0·28	3	1·83	1·03	4	2·61	2·56
		Kutubdia ..	3	0·80	0·34	1	0·42	0·65	2	0·34	2·05
		Satkania ..	2	0·20	0·22	Nil	0·05	0·40	4	3·83	1·80
		Mirsarai ..	2	0·45	0·10	4	2·33	0·82	2	1·16	2·47
		Rangunia ..	1	0·25	(n)	1	0·38	(n)	2	0·47	(n)
		Total ..	13	3·42	1·09	10	5·48	3·39	13	8·06	10·16
		District average ..	2·60	0·68	0·22	2·00	1·10	0·68	2·60	1·61	2·03
	Tippera ..	Comilla (Obsy.) ..	Nil	0·07	0·29	1	2·30	1·18	5	3·20	2·95
		Chandpur ..	2	0·39	0·41	3	1·30	1·09	3	1·43	2·88
		Brahmanbaria ..	1	0·17	0·49	1	0·69	1·19	7	4·54	3·82
		Ramchandrapur ..	1	0·50	0·23	1	0·10	1·01	3	1·45	2·66
		Nasirnagar ..	Nil	Nil	0·34	Nil	Nil	1·02	1	0·50	3·14
		Daudkandi ..	1	1·02	0·36	1	1·19	1·05	4	2·65	2·29
		Kasba ..	Nil	Nil	0·24	Nil	Nil	0·97	1	3·38	3·18
		Laksam ..	Nil	Nil	0·44	2	1·40	1·21	2	3·83	2·23
		Total ..	5	2·15	2·80	9	6·98	8·72	26	20·98	23·15
		District average ..	0·62	0·27	0·35	1·13	0·87	1·09	3·25	2·62	2·89

(n) Not ascertained.

Province of Bengal for the year 1936.

April			May.			June.			July.		
Number of rainy days.	Rainfall.	Normal rainfall.	Number of rainy days.	Rainfall.	Normal rainfall.	Number of rainy days.	Rainfall.	Normal rainfall.	Number of rainy days.	Rainfall	Normal rainfall
6	3·22	5·57	12	22·31	9·78	15	13·28	14·50	19	11·71	14·11
5	3·25	5·36	12	15·83	9·75	20	11·48	13·56	23	13·97	12·84
5	1·02	6·84	14	13·03	8·27	18	13·97	15·52	20	16 09	13·87
6	3·22	5·48	14	15·72	9·41	14	10·79	12·95	21	14·54	12·98
4	1·39	7·12	9	13·85	9·87	14	11·87	14·92	19	17·75	12·26
3	1·55	4·33	9	11·50	9·15	12	7·28	11·54	17	9·68	11·76
7	2·08	5·69	14	16·37	9·76	14	12·63	14·04	19	18·39	13·45
5	1·66	6·44	13	18·44	8·16	18	21·74	15·13	18	28·38	14·93
41	17·39	46·83	97	127·05	74·15	120	103·04	112·16	156	180·51	106·20
5·13	2·17	5·85	12·13	15·88	9·27	15·00	12·88	14·02	19·50	16·31	13·28
6	2·79	6·37	15	14·12	12·02	15	13·16	19·29	21	23·15	15·46
3	1·44	3·53	9	10·18	8·32	17	11·69	12·00	15	12·73	11·08
4	1·36	3·51	12	12·53	8·48	15	8·68	13·09	19	17·95	13·45
6	2·77	5·75	15	20·06	12·54	17	10·57	18·17	19	19 02	16 46
6	3·82	3·47	12	15·04	9·66	13	5·22	15·36	21	15·79	13·79
6	9·40	6·11	16	19·11	13·91	18	17·63	23·66	20	28·31	20·36
6	1·91	2·84	12	15·54	7·93	15	8·62	13·75	18	20·43	10·53
5	6·87	5·57	14	26 89	15·84	16	14·98	26 99	26	34·00	30·80
6	3·27	4·44	15	21·99	10·60	11	8·46	15·35	16	32·07	16·84
5	4·80	3·29	12	16·29	11·38	13	7·00	16·23	18	35·09	14·75
5	4·30	5·16	12	23·41	11·94	12	12·65	21·71	22	27·70	20·23
58	42·73	50·04	144	195·16	122·62	162	118·66	196·14	215	266·24	188·75
5·27	3·89	4·55	13·09	17·74	11·15	14·73	10·79	17·83	19·54	24·20	16·70
2	0·57	4·47	10	20·66	8·71	14	6·26	13·12	22	8·59	12·60
4	2·80	4·72	11	14·58	9·04	13	10·11	13·36	15	11·00	12·88
2	0·85	4·15	11	10·51	8·29	14	6·10	12·30	18	8·04	11·15
2	1·21	4 98	13	13·43	8·56	11	7·51	13·25	22	9·23	13·33
2	0·59	5·91	13	16·57	9·18	11	8·67	17·41	14	8·99	13·31
3	0·82	5·76	10	17·64	8·51	14	9·43	13·98	21	15·18	11·75
1	0·30	3·33	12	14·91	8·30	13	8·28	15·17	17	7·35	12·48
3	2·43	4·13	14	13·83	9·03	14	9·35	15·01	19	14·92	12·66
3	0·98	5·47	8	12·43	9·08	16	6·73	12·89	17	10·57	11·07
4	0·85	8·05	10	17·82	10·77	17	8·73	18·74	19	15·28	17·40
26	11·40	50·97	112	152·33	89·47	137	81·17	145·23	184	109·15	128·53
2·60	1·14	5·10	11·20	15·23	8·95	13·70	8·12	14·52	18·40	10·92	12·85
1	0·40	4·19	13	26·75	10·12	18	23·95	21·94	24	24·00	22·07
1	0·30	4·47	13	23·54	10·02	14	8·90	21·70	13	17·76	22·58
3	0·92	3·25	14	26·15	7·95	16	28·24	15·29	18	22·91	15·92
3	1·86	4·78	12	18·58	9·02	17	10·09	16·33	20	16·22	15·60
3	0·83	4·53	10	11·16	8·33	11	5·38	13·77	20	14·14	13·93
5	1·79	4·70	13	23·61	8·17	14	10·43	18·68	23	17·55	17·79
1	0·28	5·75	15	26 91	10·68	14	7·94	21·22	24	17·04	19·31
Nil	Nil	4·55	12	13·26	9·70	22	18·79	18·08	26	22·09	20·04
17	6·38	36·22	102	169·96	73·99	126	113·72	147·01	168	151·71	147·24
2·13	0·80	4·53	12·75	21·24	9·25	15·75	14·22	18·38	21·00	18·96	18·41
3	0·69	4·93	14	14 97	12·60	19	20·01	30·14	23	34·93	35·94
4	4·38	5·47	13	19 01	9·52	13	15·14	20·79	18	18 31	22·40
2	1·72	4·06	10	19·58	10·76	14	25·31	24·24	21	28·44	28·85
3	5·60	4·73	13	14·37	8·89	13	6·71	20·41	21	17·87	25·36
3	3·83	5·85	12	16·43	9·99	14	13·48	23·38	25	38·21	26·41
3	4·00	(n)	13	18·73	(n)	15	17·29	(n)	22	16·28	(n)
15	16·22	25·04	62	84·36	51·76	73	89·65	118·96	108	137·76	138·96
3·00	3·24	5·01	12·40	16·87	10·35	14·60	17·93	23·79	21·60	27·55	27·79
6	2·50	6·58	14	20·98	11·77	14	11·28	18·05	22	28·42	15·05
3	0·99	5·50	13	21·64	8·96	16	9·49	15·57	20	17·95	14·40
3	2·37	6·51	14	19·91	12·01	19	13·80	15·75	23	17·77	11·16
6	2·20	7·26	16	18·70	10·68	18	9·25	16·73	16	12·70	13·35
8	6·00	8·87	9	9·87	12·66	17	15·40	15·59	10	19·00	12·19
4	2·28	4·76	5	6·90	8·82	15	14·11	14·39	25	20·37	13·33
Nil	Nil	7·02	19	20·77	10·56	15	20·68	15·30	17	23·30	11·69
2	2·14	5·77	12	17·36	10·63	17	8·75	16·57	23	38·09	18·41
27	18·48	52·27	102	136·13	86·09	131	102·76	127·95	156	178·50	109 58
3·38	2·31	6·53	12·75	17·02	10·76	16·35	12·85	16·00	19·50	22·31	13·70

(n) Not ascertained.

Monthly and Annual Rainfall Table in the

Division.	District.	Station.	August.			September.		
			Number of rainy days.	Rainfall	Normal rainfall	Number of rainy days.	Rainfall.	Normal rainfall.
Dacca ..	Dacca ..	Munshiganj ..	18	13·16	13·68	11	6·29	10·97
		Dacca ..	17	11·14	13·14	7	5·26	9·76
		Nawabganj ..	17	13·19	11·47	12	8·97	7·99
		Narayanganj (Obsy.)	16	17·56	12·74	12	6·94	9·63
		Naraingdi ..	16	13·05	12·30	10	7·35	8·88
		Manikganj ..	15	10·39	11·83	16	21·98	8·51
		Joydebpur ..	20	14·99	14·03	11	7·39	10·18
		Kapasia ..	23	17·02	13·04	15	15·32	7·36
		Total ..	142	110·50	102·23	94	79·50	73·28
		District average ..	17·75	13·81	12·78	11·75	9·94	9·16
	Mymensingh ..	Kishorganj ..	19	14·11	15·58	16	12·64	13·00
		Atia (Tangail) ..	14	5·45	11·41	14	11·69	8·67
		Sarisabari ..	12	9·03	14·22	11	9·68	7·22
		Mymensingh (Obsy.) ..	16	11·68	15·64	10	13·30	13·74
		Jamalpur ..	17	12·47	13·99	12	10·39	12·42
		Netrokona ..	24	13·85	21·15	13	16·54	15·41
		Pingna ..	17	9·05	15·32	14	14·03	8·92
		Durgapur ..	18	21·60	31·30	12	18·54	19·95
		Sherpur (Town) ..	20	16·82	15·89	15	17·02	12·46
		Dewanganj ..	10	10·41	14·32	14	12·37	11·54
		Nalitabari ..	20	13·55	19·21	11	13·63	14·10
		Total ..	187	138·02	188·03	142	150·73	137·43
		District average ..	17·00	12·55	17·09	12·91	13·70	12·49
	Faridpur ..	Madaripur ..	18	10·34	11·99	14	8·68	8·71
		Faridpur (Obsy.) ..	16	17·41	12·42	14	13·99	9·29
		Rajbari (Goalundo) ..	15	9·20	10·96	15	18·77	8·29
		Haridaspur ..	15	10·95	12·70	13	7·56	8·15
		Takurhat ..	22	11·81	13·89	9	6·27	9·18
		Bhanga ..	17	8·80	12·19	10	14·98	9·52
		Pangsa ..	17	16·19	12·29	14	15·06	6·68
		Ballakandi ..	19	11·85	13·33	11	13·86	7·89
		Bhusna ..	14	10·95	12·85	9	14·78	9·60
		Palong ..	19	17·10	17·22	10	7·74	8·64
		Total ..	172	124·60	129·84	119	121·69	85·95
		District average ..	17·20	12·46	12·98	11·90	12·17	8·60
	Bakarganj ..	Patuakhali ..	21	24·32	18·95	17	25·00	13·90
		Barguna ..	10	8·08	19·61	3	11·85	12·64
		Pirozpur ..	20	20·92	13·40	14	12·29	10·49
		Barisal (Obsy.) ..	21	15·74	13·62	17	10·75	11·15
		Gaurnadi ..	19	14·02	12·74	11	5·38	9·21
		Bhola ..	20	12·67	16·93	12	9·76	12·07
		Daulatkhan ..	19	13·59	19·26	12	16·00	12·90
		Bauphal ..	10	10·39	18·61	6	11·37	13·42
		Total ..	140	119·73	133·12	92	102·40	95·78
		District average ..	17·50	14·97	16·64	11·50	12·80	11·97
Chittagong ..	Chittagong ..	Cox's Bazar (Obsy.) ..	21	32·78	28·55	12	19·67	13·54
		Chittagong (Obsy.) ..	17	28·38	19·30	10	7·64	11·93
		Kutubdia ..	18	29·34	25·07	15	16·80	12·89
		Satkania ..	16	21·17	20·00	14	8·85	11·59
		Mirsarai ..	15	20·00	25·51	10	17·35	15·79
		Rangunia ..	16	35·27	(n)	15	12·35	(n)
		Total ..	87	131·67	118·43	61	70·31	65·74
		District average ..	17·40	26·33	23·69	12·20	14·06	13·15
	Tippera ..	Comilla (Obsy.) ..	23	17·61	15·73	11	11·39	10·93
		Chandpur ..	21	15·04	16·22	17	11·28	10·65
		Brahmanbaria ..	20	7·09	12·14	11	8·23	10·23
		Ramchandrapur ..	10	10·70	13·52	11	5·00	10·05
		Nasirnagar ..	9	6·85	11·94	4	1·45	11·27
		Daudkandi ..	25	17·12	12·54	15	8·40	8·79
		Kasba ..	14	16·40	12·14	5	3·53	9·13
		Laksam ..	19	22·19	17·17	9	7·69	11·61
		Total ..	141	113·09	111·40	83	57·06	82·66
		District average ..	17·63	14·14	13·93	10·38	7·13	10·33

(n) Not ascertained.

rovince of Bengal for the year 1936.

October.			November.			December.			Annual.		
Number of rainy days.	Rainfall.	Normal rainfall.	Number of rainy days.	Rainfall.	Normal rainfall.	Number of rainy days.	Rainfall.	Normal rainfall.	Number of rainy days.	Rainfall.	Normal rainfall.
6	4·49	5·56	1	0·12	1·03	Nil	Nil	0·21	93	80·71	80 15
6	3·50	4 60	1	0·11	0·84	1	0 24	0 17	96	68·55	74 24
6	2·52	4 81	3	2·50	0·39	Nil	0·04	0·21	95	80 22	73·90
7	3·45	5·07	2	0·96	0·98	Nil	0·04	0·19	97	78 82	73·82
8	7·42	5·50	1	0·70	0·83	Nil	Nil	0·27	89	77·90	76·63
5	3·78	4·[illegible]	3	1·54	0·89	Nil	Nil	0·15	84	70·81	65·74
5	4·59	4 74	1	0·93	0·98	1	0·12	0·13	99	80·34	76·69
4	2·59	4·65	1	0·12	0·31	1	0·50	0·14	105	108·16	72·79
47	32·34	39·09	13	6·98	6·25	3	0·94	1·47	758	645·51	593·96
5·85	4·04	4·89	1·63	0·87	0·78	0·38	0·12	0·18	94·75	80·68	74·25
6	2·92	5·88	1	0·40	0·79	Nil	0·03	0·19	106	85·94	92·59
1	0·69	4·35	1	0·11	0·51	Nil	0·03	0·10	80	55 81	62·68
5	4·87	5·33	Nil	Nil	0·48	1	0·10	0·26	84	66 13	68·10
5	10·31	5·80	Nil	Nil	0·88	1	0·48	0·07	94	92·77	92·95
6	6·25	5·22	Nil	Nil	0·46	1	0·20	0·13	93	72·20	77·14
6	9·14	7·05	Nil	Nil	0·76	1	0·11	0·12	107	117·36	112·19
4	6 07	5·22	1	0·26	0·18	Nil	0·05	0·05	90	77·40	66·88
5	20·52	7·33	Nil	Nil	0·80	1	0·22	0·04	108	148·75	141·88
6	10·17	5·35	Nil	Nil	0·78	Nil	Nil	0·04	94	113·19	84·46
5	8·58	5 52	Nil	Nil	0·68	2	0·26	0·03	83	99·18	79·91
5	9·94	5·44	Nil	Nil	0·72	Nil	Nil	0·04	91	109·98	100·99
54	89·46	62 49	3	0·77	6·99	7	1·48	1·07	1,025	1,038·71	979·77
4·91	8·13	5·68	0·27	0·07	0·64	0·64	0·13	0·10	93·18	94·43	89 07
7	4·36	4·69	2	1·84	0·81	1	0·17	0·17	98	65·05	69·17
6	4·37	4·74	2	0·34	1·10	Nil	0·06	0·12	88	77·91	71·72
5	3·94	4·43	1	1·21	0·87	Nil	0·10	0·12	87	63·27	64·22
4	3·18	5·59	Nil	0 03	0·87	1	0·13	0·22	88	55·99	70 85
6	4·77	5·02	2	0·65	0·67	1	0·12	0·28	89	61·22	77·63
6	4·60	5·83	2	0·56	0·58	Nil	Nil	0·17	86	73·11	71·38
4	2·69	5·18	1	1·00	0·54	Nil	0·09	0·22	87	70·38	67·45
4	1·81	6·06	1	0·29	0·36	Nil	Nil	0·43	93	73·43	73·43
2	1·59	6·68	1	0·43	0·79	Nil	Nil	0·22	75	62·70	72·17
7	3·43	7·56	1	1·15	0·74	1	0·28	0·28	96	75·54	94·32
51	34·74	55·78	13	7·50	7·33	4	0·95	2·23	887	678·60	732·34
5·10	3·47	5·58	1·30	0·75	0·73	0·40	0 09	0·22	88·70	67·86	73·23
6	8·72	8·01	Nil	Nil	1 61	Nil	Nil	0·42	106	139·95	105·24
3	9·65	8·72	Nil	Nil	1·06	Nil	Nil	0·20	62	82·36	104·68
8	9·02	5·55	1	1·84	1·19	Nil	Nil	0·22	102	129·56	76·74
6	3·87	6·26	Nil	Nil	1·48	Nil	0·02	0·39	105	81·47	82·31
8	2·23	4·90	1	0·20	1·08	Nil	Nil	0·16	90	55·17	72·35
7	8·40	6·60	Nil	0·05	1·37	Nil	0·04	0·33	100	86·95	90·00
7	11·44	7·15	Nil	Nil	1·50	Nil	Nil	0·25	99	96·91	101·27
4	8·23	7·15	Nil	Nil	1·40	Nil	Nil	0·39	84	86·53	96·43
49	62·16	54·34	2	2·09	10·69	Nil	0·06	2·36	748	758·90	729 02
6·13	7·77	6·79	0·25	0·26	1·34	Nil	0·01	0·29	93·50	94·86	91·13
9	8·58	8·73	3	0·49	3·78	Nil	0·10	0·51	110	143·35	140·64
7	5·90	6·88	Nil	0·03	1·87	Nil	Nil	0·70	92	104·04	102·73
11	7·72	7·13	Nil	0·09	2·48	Nil	Nil	0·52	97	130·56	119·04
9	6·95	6·68	Nil	Nil	1·79	Nil	Nil	0·38	95	85·60	102·25
7	6·45	7·43	1	1·00	1·38	Nil	Nil	0·46	95	120·69	119 59
5	3·33	(a)	Nil	Nil	(a)	Nil	Nil	(a)	93	108·35	(a)
43	35·60	36·85	4	1·61	11·30	Nil	0·10	2·57	489	584·24	584·25
8·60	7·12	7·37	0·80	0·32	2·26	Nil	0·02	0·51	97·80	116·85	116·85
10	10·68	6·52	1	0·28	1·03	Nil	0·02	0·23	107	108·73	90·31
10	6·20	5·71	2	1·85	0·87	Nil	Nil	0·25	110	87 56	82·51
6	4·00	5·22	Nil	0·05	0·76	Nil	Nil	0·23	105	78·62	79·51
7	3·90	5·62	1	0·65	1·11	Nil	Nil	0·10	90	65·15	82 32
7	9 10	5·20	Nil	Nil	0·85	Nil	Nil	0·16	60	68·17	83 23
14	5·69	4·16	1	0·66	0·97	Nil	Nil	0·11	110	80·48	71·57
6	4·36	4·45	Nil	Nil	1·11	Nil	Nil	0·23	77	92·61	76·02
9	11 21	5·75	Nil	Nil	1·04	Nil	Nil	0·22	95	113·56	91·05
69	55·14	42·63	5	3·49	7·74	Nil	0·02	1·53	754	694·78	656·52
8·63	6 80	5·33	0·63	0 44	0·97	Nil	0·00	0·19	94·25	86·85	82·07

(a) Not ascertained.

Monthly and Annual Rainfall Table in the

Division.	District	Station	January.			February			March		
			Number of rainy days.	Rainfall	Normal rainfall.	Number of rainy days.	Rainfall	Normal rainfall	Number of rainy days.	Rainfall	Normal rainfall.
Chittagong ..	Noakhali ..	Noakhali (Obsy.) ..	2	0·45	0 27	3	1·86	1·13	1	1 38	2·65
		Feni ..	Nil	0 09	0 33	5	2 01	0 97	1	3 28	3·23
		Harishpur ..	2	0·64	0 25	4	1·87	0 87	2	1 73	2 18
		Ramganj ..	1	0 13	0 25	3	1 48	1 02	4	1 54	2·87
		Chhagalnaya ..	Nil	Nil	0·17	5	1·36	0 95	2	1 37	2·91
		Hatiya ..	2	1·50	0 15	Nil	Nil	1 01	Nil	Nil	2 06
		Lakshmipur ..	1	0·40	0 21	5	4 23	1 05	3	2·65	2·08
		Total ..	8	3 21	1 63	25	12·81	7 00	13	11 95	17 98
		District average ..	1 14	0 46	0 23	3 57	1 83	1 00	1·86	1·71	2·57
	Chittagong Hill Tracts.	Rangamati ..	1	0·21	0 32	3	0 92	1 04	1	0 21	2·83
		Bandarban ..	Nil	0·09	0 19	Nil	0 08	0 64	1	0 10	2·54
		Barkal	1	0 61	0 15	2	1·77	0 93	2	0 30	2 41
		Mahalchari ..	1	0 39	0·07	3	2·36	0·49	2	0·93	2·29
		Lama	2	1·53	0 03	Nil	Nil	0·86	1	0·85	1·01
		Ramgarh ..	Nil	Nil	0·09	5	2 11	0 55	2	0 67	3·15
		Manikseri ..	Nil	Nil	(n)	4	2 02	(n)	3	0 52	(n)
		Dighinala ..	Nil	0·09	(n)	3	1 42	(n)	3	0 78	(n)
		Mainmukh ..	2	0·65	(n)	4	1 45	(n)	3	0 55	(n)
		Kaptai	2	0·75	(n)	2	0 53	(n)	1	0 22	(n)
		Panchhari ..	1	0 12	(n)	4	1 03	(n)	3	0 91	(n)
		Nakhyongchhari ..	3	0·58	(n)	1	0 11	(n)	Nil	Nil	(n)
		Total ..	5	2·83	0·85	13	7·24	4 51	9	3·06	14·23
		District average ..	0·83	0·47	0·14	2 17	1 21	0 75	1·50	0·51	2 37
	Tripura State	Agartala ..	Nil	0·04	0 39	1	0 62	1 24	4	2·16	3·78
	Cooch Behar ..	Dinhata ..	Nil	Nil	0 42	2	0 30	0·66	4	1·96	1·54
		Cooch Behar (Obsy.)	Nil	Nil	0 19	2	0 56	0·87	5	3 39	1 91
		Mecklliganj ..	Nil	Nil	0 28	1	0·34	0 79	4	4·55	1 81
		Mathabhanga ..	Nil	Nil	0 28	2	0 41	0 67	3	4 26	1 67
		Fulbaria (Tufanganj)	Nil	Nil	0 29	1	0 18	0 81	5	3 15	1·61
		Total ..	Nil	Nil	1 46	8	1·79	3 80	21	17·31	8·04
		District average ..	Nil	Nil	0 29	1 60	0 36	0 76	4 20	3 46	1·61

(n) Not ascertained.

Province of Bengal for the year 1936.

April.			May.			June.			July.		
Number of rainy days.	Rainfall.	Normal rainfall.	Number of rainy days.	Rainfall	Normal rainfall.	Number of rainy days.	Rainfall.	Normal rainfall.	Number of rainy days.	Rainfall.	Normal rainfall.
3	2·10	6·40	14	23·49	11·40	19	15·65	21·49	25	27·53	24 35
4	3 53	6·23	12	12·62	10·98	14	5·56	22·89	27	30·63	24·29
3	0·60	4·85	15	16·65	10·15	19	13·20	21·68	26	29·62	27·73
2	0 48	4·92	9	11·58	9·56	11	12·92	17·15	19	22·80	17 12
4	5 42	8·57	11	11·04	11·03	15	5·53	20·51	28	25·72	23·94
2	2·63	6·16	14	27·81	10·44	14	16·31	22·06	26	30·13	28·01
2	1·10	6·67	11	26·40	10·17	9	10·18	20·80	7	18·40	19·37
20	15·86	43·80	86	129·59	73·73	101	79·35	147·18	158	179·83	164·61
2·86	2·27	6·26	12·28	18·51	10·54	14·43	11·34	21·03	22·57	25·69	23·55
5	7·47	5·01	17	21·84	9·75	19	11·37	17·85	26	16 58	18·94
5	4·35	5·26	15	16·66	10·13	21	10·67	20·07	25	15·92	21·99
3	10·35	6·43	15	21·41	8·60	19	13·04	18·64	29	20·57	21·10
8	8·36	5·82	18	17·20	5·54	20	11·49	15·39	23	21·42	17·86
6	1·87	6·47	17	16·37	6·37	18	19·61	26·80	21	24·59	34·46
5	7·89	5·90	14	13·08	5·92	14	8·14	17·33	20	19·69	18·74
5	6·50	(n)	18	21·42	(n)	17	6·96	(n)	25	22·30	(n)
8	10·84	(n)	18	22·15	(n)	20	11·08	(n)	27	17·91	(n)
7	8·72	(n)	15	23·20	(n)	17	8·53	(n)	26	16·40	(n)
5	4 25	(n)	17	20·04	(n)	20	17·67	(n)	25	14·07	(n)
6	8 88	(n)	16	18·41	(n)	20	15·24	(n)	22	17·90	(n)
4	3 77	(n)	13	13·07	(n)	19	26·77	(n)	21	25·83	(n)
32	40·29	34·89	96	106·56	46·31	111	74·32	116·08	144	118·77	138·09
5·33	6·72	5·81	16·00	17·76	7·72	18·50	12·39	19·35	24·00	19·80	22·18
5	3·23	6·54	16	25·13	11·31	21	17·89	15·41	27	27·51	12·10
7	5·41	4·37	14	10·69	13·66	18	14·55	25·99	15	18·61	19·97
7	5·87	5·43	14	10·07	15·80	23	35·34	32·91	19	31·82	30·34
6	4·70	3·68	16	14·07	11·76	22	23·06	25·06	23	39·87	24·04
9	3·71	4·42	13	11·27	13·13	22	21·77	28·28	20	39 67	26·23
7	4·64	6·59	17	11·88	15·90	19	28·61	29·10	19	31·09	28·94
36	24·33	24·49	74	57·98	70·25	104	123·33	141·34	96	161·06	129·52
7·20	4·86	4·90	14·80	11·60	14·05	20·80	24·67	28·27	19·20	32·21	25·90

(n) Not ascertained.

Monthly and Annual Rainfall Table in the

Division.	District.	Station.	August.			September.		
			Number of rainy days.	Rainfall.	Normal rainfall.	Number of rainy days.	Rainfall.	Normal rainfall.
Chittagong ..	Noakhali ..	Noakhali (Obsy.) ..	19	19·83	26·21	16	17·19	16·63
		Feni ..	17	19·04	24·41	17	19·88	14·68
		Harishpur ..	19	17·91	26·14	13	14·88	17·15
		Ramganj ..	22	18·60	17·63	12	8·71	12·10
		Chhagalnaya ..	15	19·88	23·72	13	15·18	14·53
		Hatiya ..	22	24·81	26·78	13	19·00	17·03
		Lakshmipur ..	14	17·50	19·78	8	9·20	14·70
		Total ..	128	137·57	164·67	92	104·04	106·82
		District average ..	18·28	19·65	23·52	13·14	14·86	15·26
	Chittagong Hill Tracts.	Rangamati ..	20	25·82	17·64	16	10·15	12·07
		Bandarban ..	17	23·13	18·05	16	7·65	12·21
		Barkal ..	25	23·93	19·36	17	11·52	14·51
		Mahalchari ..	21	26·23	17·70	16	11·67	12·79
		Lama ..	17	37·81	23·83	14	23·72	13·57
		Ramgarh ..	17	18·32	22·06	11	9·94	14·32
		Manikseri ..	19	26·41	(n)	13	11·24	(n)
		Dighinala ..	25	13·68	(n)	15	9·78	(n)
		Mainmukh ..	21	26·39	(n)	18	14·52	(n)
		Kaptai ..	22	27·91	(n)	16	12·73	(n)
		Panchhari ..	23	19·29	(n)	16	16·91	(n)
		Nakhyongchhari ..	17	32·13	(n)	17	21·49	(n)
		Total ..	117	155·24	118·64	90	74·65	79·47
		District average ..	19·50	25·87	19·77	15·00	12·44	13·25
	Tripura State	Agartala ..	20	14·49	11·79	13	11·05	9·64
	Cooch Behar ..	Dinhata ..	14	9·84	17·75	15	17·84	19·42
		Cooch Behar (Obsy.)	18	16·70	25·15	13	16·70	26·40
		Mekliganj ..	19	26·25	22·22	12	17·02	17·69
		Mathabhanga ..	18	16·50	22·23	14	18·25	20·06
		Fulbaria (Tufanganj)	18	12·14	20·99	15	17·86	23·83
		Total ..	87	81·43	108·34	69	87·67	107·40
		District average ..	17·40	16·29	21·67	13·80	17·53	21·48

(n) Not ascertained.

Dacca, the 15th March 1937.

Province of Bengal for the year 1936.

October.			November.			December.			Annual.		
Number of rainy days.	Rainfall	Normal rainfall.	Number of rainy days.	Rainfall.	Normal rainfall	Number of rainy days.	Rainfall.	Normal rainfall.	Number of rainy days.	Rainfall.	Normal rainfall.
4	5·14	8·36	1	0·44	1·74	Nil	0·02	0·28	107	115·08	120·91
7	6·78	7·44	1	0·85	1·94	Nil	Nil	0·52	105	104·27	117·91
8	5·72	9·17	1	0·32	1·57	Nil	Nil	0·45	112	103·14	122·19
2	2·25	6·37	Nil	Nil	1·13	Nil	Nil	0·22	85	80·49	90·34
5	7·16	8·74	1	0·90	1·54	Nil	Nil	0·35	99	93·56	116·96
10	11·58	9·84	1	0·54	2·00	Nil	Nil	0·30	103	134·31	126·58
6	6·20	7·76	1	0·40	1·16	Nil	Nil	0·23	67	91·66	103·98
42	44·83	57 68	6	3·45	11·08	Nil	0·02	2·44	678	722·51	798·82
5·86	6·40	8·24	0·86	0·49	1·57	Nil	0·00	0·35	96·86	103·21	114·12
10	9·19	6·60	Nil	Nil	1·73	Nil	Nil	0·56	118	103·76	94·34
7	5·15	7·02	1	2·80	1·82	Nil	Nil	0·49	108	86·60	100·41
10	9·43	7·35	Nil	0·02	1·81	Nil	Nil	0·64	123	112·95	101·73
10	8·64	6·13	Nil	0·05	1·29	Nil	0·06	0·01	122	108·80	85·38
11	12·12	4·71	2	1·36	2·57	Nil	Nil	0·09	109	139 83	120·77
6	3·91	5·52	1	0·52	1·93	Nil	Nil	0·00	95	84·27	95 51
9	5·85	(n)	1	1·70	(n)	Nil	Nil	(n)	114	104·92	(n)
4	6·28	(n)	Nil	Nil	(n)	Nil	Nil	(n)	123	94·01	(n)
11	8·13	(n)	1	0·29	(n)	Nil	0·06	(n)	125	108·89	(n)
11	7·05	(n)	2	0·75	(n)	Nil	Nil	(n)	123	105·97	(n)
4	5·13	(n)	Nil	Nil	(n)	Nil	Nil	(n)	115	103·82	(n)
8	9·85	(n)	Nil	Nil	(n)	Nil	Nil	(n)	103	133·58	(n)
54	48·44	37·33	4	4·75	10·95	Nil	0·06	1·79	675	636·21	598·14
9·00	8·07	6·22	0·67	0·79	1·83	Nil	0·01	0·30	112·50	106·04	99·69
9	7·60	5·14	2	1·54	1 06	Nil	Nil	0·30	118	111·26	78·70
5	3·92	5·82	Nil	Nil	0·25	1	0·12	0·09	95	83·24	109·94
4	4·76	7·68	Nil	0·03	0·23	Nil	0·11	0·10	105	125·35	147·01
2	3·66	5·19	Nil	Nil	0·14	Nil	0·04	0·12	105	133·56	112·28
4	4·41	5·67	Nil	Nil	0·18	1	0·16	0·08	106	120·41	122·90
6	3·37	7·15	Nil	Nil	0·32	Nil	0·03	0·15	107	112·95	135·68
21	20·12	31·51	Nil	0·03	1·12	2	0·46	0·54	518	575·51	627·81
4·20	4·02	6·30	Nil	0·01	0·22	0·40	0·09	0·11	103 60	115·10	125·56

(n) Not ascertained.

S. ABDULLAH, for *Director of Agriculture, Bengal.*

Vital Statistics for the month of November 1936 of the

Districts.	No.	Towns.	Population under registration according to census of 1931.			Births registered.		Deaths							
			Male.	Female.	Total.	Number registered (excluding stillbirths).	Stillborn number registered.	Cholera.	Small-pox.	Plague.	Malaria.	Enteric fever.	Measles.	Relapsing fever (Spirochaetal).	Kala-azar.
Burdwan ..	1	Burdwan	23,485	16,133	39,618	69	..	..	..	..	7	2	..	..	1
	2	Raniganj	9,162	7,211	16,373	47	2	2	..	..	2	..	..	..	..
	3	Asansol ..	18,710	12,576	31,286	123	2	..	..	..	..	1	..	..	..
Birbhum ..	4	Suri ..	6,089	4,819	10,908	20	1	..	..	..	..	..	..	..	..
Bankura ..	5	Bankura ..	17,280	14,423	31,703	42	..	..	2	..	4	..	..	..	..
	6	Vishnupur	9,767	9,929	19,696	25	..	..	..	..	1	..	..	..	..
	7	Sonamukhi	5,337	5,652	10,989	32	..	..	..	..	..	1	..	..	..
Midnapur ..	8	Midnapur	17,807	14,214	32,021	88	..	..	..	..	7	1	..	..	..
	9	Ghatal ..	6,422	5,978	12,400	43	..	..	..	..	2	..	..	..	..
Hooghly ..	10	Hooghly-Chinsura.	18,799	13,835	32,634	136	2	..	..	..	..	2	..	..	..
	11	Bansberia	9,797	4,424	14,221	13	..	..	..	..	8	..	..	..	..
	12	Serampur	23,985	15,071	39,056	82	2	1	..	..	1	1	..	..	..
	13	Rishra-Konnagar.	17,528	9,340	26,868	39	2	1	..	..	2	..	..	..	..
	14	Baidyabati	10,369	8,117	18,486	49	..	..	..	..	3	..	..	..	..
	15	Bhadreswar	14,938	8,054	22,992	35	..	..	..	..	..	..	..	..	..
	16	Champdani	17,497	7,868	25,365	98	1	..	..	..	1	..	..	..	..
Howrah ..	17	Howrah ..	145,120	79,753	224,873	674	29	8	..	..	5	24	..	..	3
	18	Bally ..	20,944	9,403	30,347	81	..	..	..	..	1	..	..	..	..
24-Parganas ..	19	South Suburban.	22,183	17,316	39,499	162	1	1	..	..	1	4	1	..	..
	20	Tollyganj	14,800	9,676	24,476	35	..	..	..	..	1	..	..	..	..
	21	Garden Reach.	36,131	19,741	55,872	128	..	..	..	..	6	..	..	..	..
	22	Budge-Budge.	15,514	8,669	24,183	50	1	4	..	..	..	..	..	..	..
	23	Baranagar	23,116	13,934	37,050	102	6	1	..	..	2	3	..	..	..
	24	Kamarhati	20,107	10,247	30,354	41	..	..	1	..	..	..	..	..	..
	25	Rajpur ..	5,788	5,645	11,433	19	..	..	..	..	1	..	..	..	..
	26	South Dum Dum.	11,983	6,488	18,471	40	1	..	..	..	..	1	..	..	2
	27	Barrackpur	16,320	9,075	25,395	16	..	..	..	..	1	..	..	..	..
	28	Panihati	6,738	4,961	11,699	48	..	..	..	..	1	..	..	..	..
	29	North Barrackpur.	9,751	6,507	16,258	48	..	..	1	..	2	1	..	..	..
	30	Titagarh	34,252	15,332	49,584	85	6	..	..	..	..	..	..	..	..
	31	Garulia ..	9,282	4,751	14,033	16	..	..	..	..	1	..	..	..	..
	32	Naihati ..	20,123	10,785	30,908	29	1	..	..	..	1	..	..	..	..
	33	Halisahar	12,188	4,582	16,770	20	..	..	..	..	..	..	..	..	..
	34	Kanchrapara.	10,113	4,892	15,005	40	..	..	..	..	..	..	..	..	..
	35	Bhatpara	60,134	24,841	84,975	189	7	..	..	..	2	1	..	..	..
	36	Basirhat ..	11,106	10,181	21,287	47	1	..	..	..	15	2	..	..	1
	37	Baduria ..	7,169	6,508	13,677	23	..	..	..	..	1	..	..	..	..
Calcutta ..	38	Calcutta ..	778,817	362,045	1,140,862	2,499	272	8	3	..	77	94	3	..	19
Nadia ..	39	Krishnagar	12,807	11,477	24,284	87	7	..	..	..	2	1	..	..	..
	40	Nabadwip	8,912	9,949	18,861	39	5	1	..	..	..	..	..	..	..
	41	Ranaghat	6,334	5,061	11,395	7	..	..	..	..	3	..	..	..	..
	42	Santipur	12,016	12,976	24,992	72	4	..	4	..	1	..	..	..	..

towns with a population of 10,000 and over in Bengal.

registered.

Influenza.	Other fevers.	Dysentery.	Diarrhœa.	Pneumonia.	Pulmonary tuberculosis.	Other respiratory diseases.	Injuries including suicide.	Deaths from child-birth.	Other causes.	Total of all causes.			Total of corresponding month of previous year.			No.	Towns.
										Male.	Female.	Total.	Male.	Female.	Total.		
..	..	3	1	3	2	4	1	1	13	21	17	38	16	18	34	1	Burdwan.
..	6	1	3	3	3	8	1	1	24	29	25	54	18	11	29	2	Raniganj.
..	14	..	..	2	4	..	2	1	31	21	34	55	21	19	40	3	Asansol.
..	2	..	..	1	..	..	..	1	1	2	3	5	9	4	13	4	Suri.
..	4	..	..	1	..	..	..	1	15	17	10	27	18	16	34	5	Bankura.
..	1	..	1	..	..	..	1	1	7	4	8	12	8	10	18	6	Vishnupur.
..	..	4	..	4	..	2	..	1	3	4	11	15	10	10	20	7	Sonamukhi.
..	7	4	2	6	4	..	..	1	17	28	21	49	40	42	82	8	Midnapur.
..	5	..	4	..	..	2	..	1	5	8	11	19	12	8	20	9	Ghatal.
..	6	..	2	5	4	5	1	1	30	31	25	56	36	22	58	10	Hooghly-Chinsura.
..	..	..	2	2	..	1	..	..	2	6	9	15	10	9	19	11	Bansberia.
..	11	1	7	6	2	1	..	1	23	31	24	55	36	32	68	12	Serampur.
..	9	1	1	2	..	1	1	..	9	14	13	27	20	19	39	13	Rishra-Konnagar.
..	..	..	..	3	..	2	2	..	9	9	10	19	12	8	20	14	Baidyabati.
..	4	..	2	..	..	..	..	..	14	7	13	20	14	16	30	15	Bhadreswar.
..	3	..	1	5	2	1	..	..	8	13	8	21	13	8	21	16	Champdani.
..	6	72	47	51	28	85	11	4	213	302	255	557	246	216	462	17	Howrah.
..	5	2	9	4	1	5	1	..	6	12	22	34	12	8	20	18	Bally.
..	3	3	7	7	2	4	..	..	22	27	28	55	28	37	65	19	South Suburban.
..	2	4	1	3	..	..	..	..	6	9	8	17	7	6	13	20	Tollyganj.
..	7	4	4	5	1	6	..	1	19	26	27	53	17	33	50	21	Garden Reach.
..	8	11	1	4	..	2	..	..	14	22	22	44	24	26	50	22	Budge-Budge.
..	6	7	1	1	3	4	1	1	39	36	33	69	34	28	62	23	Baranagar.
..	12	1	3	3	1	3	2	..	11	21	16	37	12	11	23	24	Kamarhati.
..	6	..	..	1	..	..	..	..	1	2	7	9	6	16	22	25	Rajpur.
..	..	1	..	..	2	4	..	2	3	4	11	15	17	11	28	26	South Dum Dum.
..	2	1	2	1	..	1	..	..	3	7	4	11	7	6	13	27	Barrackpur.
..	..	..	1	2	..	..	1	..	8	6	7	13	6	10	16	28	Panihati.
..	3	2	1	1	..	2	..	..	8	10	11	21	12	7	19	29	North Barrackpur.
..	68	..	..	..	..	2	2	..	4	39	37	76	28	23	51	30	Titagarh.
..	1	..	1	..	..	2	..	..	6	7	4	11	5	4	9	31	Garulia.
..	9	1	2	..	..	2	1	1	7	10	14	24	18	9	27	32	Naihati.
..	2	..	..	1	2	1	..	..	5	6	5	11	3	4	7	33	Halisahar.
..	3	..	..	1	..	..	..	..	1	2	3	5	7	5	12	34	Kanchrapara.
1	38	2	9	16	7	5	..	2	46	69	60	129	50	50	100	35	Bhatpara.
..	9	2	..	5	..	1	..	..	16	23	28	51	18	23	41	36	Basirhat.
..	19	3	1	6	..	2	..	3	2	17	20	37	17	5	22	37	Baduria.
19	70	112	98	263	245	446	56	14	1,241	1,554	1,214	2,768	1,397	1,172	2,569	38	Calcutta.
..	1	..	..	..	..	..	..	..	27	14	17	31	13	20	33	39	Krishnagar.
..	16	8	1	5	..	..	2	1	16	19	31	50	19	20	39	40	Nabadwip.
..	..	..	..	..	..	..	1	..	2	4	2	6	2	4	6	41	Ranaghat.
..	3	..	..	1	3	2	1	1	9	12	13	25	12	21	33	42	Santipur.

Vital Statistics for the month of November 1936 of the

Districts.	No.	Towns.	Population under registration according to census of 1931.			Births registered.		Deaths							
			Male.	Female.	Total.	Number registered (excluding still-births).	Still-born number registered.	Cholera.	Small-pox.	Plague.	Malaria.	Enteric fever.	Measles.	Relapsing fever (Spirochaetal).	Kala-azar.
Murshidabad	43	Berhampur	15,166	12,237	27,403	54	2	..	..	..	..	..	..	..	1
	44	Jiaganj-Azimganj.	5,774	5,224	10,998	16	..	..	..	..	..	1	..	..	..
	45	Kandi ..	6,403	6,213	12,616	24	..	..	..	..	..	..	..	..	..
	46	Jangipur	6,283	6,513	12,796	32	..	9	..	..	..	..	..	..	1
Jessore ..	47	Jessore ..	7,084	4,272	11,356	18	..	..	..	..	4	..	..	..	..
Khulna ..	48	Khulna ..	11,968	7,152	19,120	24	..	..	..	..	2	1	..	..	..
	49	Satkhira ..	6,071	5,170	11,241	20	3	..	..	..	4	..	..	..	..
Rajshahi ..	50	Rajshahi	15,178	11,886	27,064	112	1	2	..	..	..	1	1	..	1
Dinajpur ..	51	Dinajpur	11,763	7,393	19,156	22	..	2	..	..	..	..	..	..	..
Jalpaiguri ..	52	Jalpaiguri	11,995	6,967	18,962	57	..	..	..	..	4	..	..	..	..
Darjeeling..	53	Darjeeling	12,101	9,084	21,185	70	4	..	..	..	..	..	..	..	2
Rangpur ..	54	Rangpur	12,808	7,941	20,749	30	1	1	..	..	1	1	..	..	1
Bogra ..	55	Bogra ..	8,678	6,141	14,819	35	4	..	..	..	1	1	..	..	..
Pabna ..	56	Pabna ..	11,970	9,934	21,904	22	..	5	..	..	3	1	..	..	..
	57	Sirajganj	17,981	14,486	32,467	118	1	..	..	..	4	..	..	..	..
Malda ..	58	English Bazar.	9,387	7,520	16,907	60	..	1	..	..	7	..	..	..	1
	59	Nawabganj	7,497	8,329	15,826	66	1	1	6	..	..	..	..	..	..
Dacca ..	60	Dacca ..	79,365	59,153	138,518	578	28	36	..	..	..	7	3	..	9
	61	Narayanganj	21,526	12,663	34,189	172	4	12	..	..	1	..	..	..	..
Mymensingh	62	Mymensingh	19,733	10,747	30,480	31	5	..	13	..	1	2	..	..	1
	63	Netrakona	6,848	4,132	10,980	24	..	..	..	..	..	..	..	..	..
	64	Jamalpur	12,629	10,448	23,077	80	1	..	4	..	..	..	..	..	..
	65	Sherpur ..	10,545	9,002	19,547	73	1	..	..	..	2	1	..	..	2
	66	Kishorganj	8,624	6,813	15,437	52	1	..	..	..	..	..	..	..	..
	67	Bajitpur ..	5,632	6,018	11,650	26	1	..	..	..	..	..	..	..	..
	68	Tangail ..	8,739	7,343	16,082	43	1	..	..	..	..	1	..	..	..
Faridpur ..	69	Faridpur	9,427	6,089	15,516	42	1	17	..	..	15	..	..	..	..
	70	Madaripur	15,204	11,690	26,894	57	1	22	..	..	..	..	..	..	1
Bakarganj ..	71	Barisal ..	23,588	12,128	35,716	92	8	2	..	..	..	..	1	..	2
	72	Pirojpur ..	6,062	4,897	10,959	25	..	..	..	..	..	..	..	..	..
Chittagong	73	Chittagong	35,049	18,107	53,156	165	9	3	..	..	..	..	..	..	4
Noakhali	74	Noakhali	7,808	5,255	13,063	20	..	3	..	..	..	..	..	..	..
Tippera ..	75	Comilla ..	18,530	12,835	31,365	18	..	..	..	..	..	..	..	..	2
	76	Brahmanbaria.	13,973	12,689	26,662	134	5	..	1	..	..	..	..	..	..
	77	Chandpur	11,443	5,395	16,838	11	..	4	..	..	..	..	..	..	..
		Total of month.	2,051,552	1,194,305	3,245,857	7,967	436	147	35	..	211	156	9	..	54
		Total of corresponding month of previous year ..	..	..	..	8,139	379	127	109	..	212	137	12	..	59
		Increase + or decrease —	..	..	..	−172	+57	+20	−74	..	−1	+19	−3	..	−5

Remarks.—1. The above table is compiled from returns collected by the municipalities and submitted to the Director of Public Health by the approximate to the actual in a proportion of cases and in a few instances are obviously incomplete.

2. The vital statistics of municipalities with a population of less than 10,000 have been excluded from this statement and 1918.

3. The birth and death ratios per mille per annum have been omitted from this statement according to Government of India

Calcutta, the 17th March 1937.

towns with a population of 10,000 and over in Bengal.

registered.

Influenza.	Other fevers.	Dysentery.	Diarrhœa.	Pneumonia.	Pulmonary tuberculosis.	Other respiratory diseases.	Injuries including suicide.	Deaths from child-birth.	Other causes.	Total of all causes.			Total of corresponding month of previous year.			No	Towns.
										Male.	Female.	Total.	Male.	Female.	Total.		
..	17	5	..	2	1	2	1	1	9	20	19	39	22	13	35	43	Berhampur.
..	..	1	..	..	1	1	1	..	5	8	2	10	7	5	12	44	Jiaganj-Azimganj.
..	3	..	1	..	..	2	..	..	4	5	5	10	4	7	11	45	Kandi
..	2	..	1	..	2	..	..	..	1	7	9	16	17	15	32	46	Jangipur.
..	..	2	..	..	3	2	..	1	4	11	5	16	18	11	29	47	Jessore.
..	9	2	1	1	2	..	..	1	8	13	14	27	16	7	23	48	Khulna.
..	8	..	1	6	..	2	..	..	2	14	9	23	15	23	38	49	Satkhira
..	11	4	7	1	1	..	..	4	29	33	29	62	23	14	37	50	Rajshahi.
..	10	4	..	3	1	1	1	1	19	25	17	42	3	3	6	51	Dinajpur.
..	..	..	..	2	..	1	..	..	5	8	4	12	21	10	31	52	Jalpaiguri.
..	20	1	..	4	..	..	2	2	15	23	23	46	24	20	44	53	Darjeeling.
..	13	..	1	..	1	2	1	1	9	21	11	32	28	13	41	54	Rangpur.
..	3	2	..	2	1	..	1	4	7	12	10	22	18	7	25	55	Bogra.
..	..	2	..	..	1	2	1	..	4	13	6	19	10	8	18	56	Pabna.
..	15	..	1	..	..	1	9	2	11	17	26	43	38	39	77	57	Sirajganj.
..	11	1	..	1	..	1	..	..	11	17	17	34	12	7	19	58	English Bazar.
..	5	2	2	3	..	..	..	3	3	7	18	25	11	5	16	59	Nawabganj.
..	5	22	13	49	12	50	7	13	119	177	168	345	164	131	295	60	Dacca.
..	23	7	4	3	2	1	..	2	41	54	42	96	44	34	78	61	Narayanganj.
..	36	1	1	1	1	1	1	..	15	40	34	74	17	13	30	62	Mymensingh.
..	4	1	..	..	..	..	..	..	4	5	4	9	7	4	11	63	Netrakona.
..	13	..	..	1	2	..	..	1	12	17	16	33	21	24	45	64	Jamalpur.
..	11	5	3	2	..	1	..	2	13	18	24	42	24	18	42	65	Sherpur.
..	5	1	3	..	..	..	..	1	7	12	5	17	11	11	22	66	Kishorganj.
..	7	2	..	..	1	..	..	1	1	4	8	12	2	2	4	67	Bajitpur.
..	5	..	1	2	..	1	..	2	7	11	8	19	9	7	16	68	Tangail.
..	2	..	1	1	1	..	1	1	7	19	27	46	23	18	41	69	Faridpur.
..	5	6	5	..	..	..	..	..	15	24	30	54	14	27	41	70	Madaripur.
..	28	6	..	..	..	4	..	..	7	25	25	50	32	40	72	71	Barisal.
..	5	1	..	2	..	..	1	1	8	9	9	18	4	6	10	72	Pirojpur.
..	32	2	..	1	..	..	5	4	27	38	40	78	28	19	47	73	Chittagong.
..	10	1	..	..	..	..	..	..	9	6	17	23	3	7	10	74	Noakhali.
..	3	..	..	1	..	3	1	..	14	20	4	24	7	4	11	75	Comilla.
..	11	5	6	..	..	2	..	1	18	22	22	44	27	29	56	76	Brahmanbaria.
..	..	..	2	..	..	..	..	..	4	5	5	10	3	6	9	77	Chandpur.
20	703	336	269	512	349	686	121	90	2,420	3,265	2,853	6,118	..	..	..		
35	616	292	203	489	327	628	119	99	2,207	3,037	2,634	5,671	..	..	..		
−15	+87	+44	+66	+23	+22	+58	+2	−9	+213	+228	+219	+447	..	..	..		

District Health Officers. Taken as a whole, the statement possesses a relative value, although the figures for individual town probably on incorporated in the returns for districts as ordered in Government of Bengal, Municipal Department, letter No. 118 San., dated the 8th February Education Department, letter No. 93, dated the 26th March 1918.

A. C. CHATTERJI, M.B., D.P.H., LT.-COL., I.M.S., *Director of Public Health, Bengal.*

Vital Statistics for the month of November 1936 of the districts

Division.	No.	Districts.	Population under registration according to census of 1931.			Births registered.		Deaths							
			Male.	Female.	Total.	Number registered (excluding still-births).	Still-born number registered.	Cholera.	Small-pox.	Plague.	Malaria.	Enteric fever.	Measles.	Relapsing fever (Spirochaetal).	Kala-azar.
Burdwan	1	Burdwan	763,534	724,888	1,488,422	3,906	28	56	4	..	567	8	..	..	6
	2	Birbhum	466,598	470,048	936,64	3,326	89	51	13	..	504	18	1	..	1
	3	Bankura	524,690	524,643	1,049,333	3,082	11	..	31	..	330	4	4	..	..
	4	Midnapur	1,392,796	1,361,876	2,754,672	7,408	265	106	1	..	1,871	23	3	..	..
	5	Hooghly	479,217	455,416	934,633	3,223	25	..	48	..	452	67	3	..	6
	6	Howrah ..	433,011	410,636	843,647	2,462	68	7	46	..	72	9	1	..	6
Presidency	7	24-Parganas	1,154,286	1,074,531	2,228,817	5,788	83	9	54	..	381	25	9	..	42
	8	Nadia ..	720,894	678,608	1,399,502	5,724	182	660	17	..	1,838	23	6	..	21
	9	Murshidabad.	649,857	657,007	1,306,864	5,747	191	477	63	..	1,050	17	5	..	33
	10	Jessore	864,362	795,446	1,659,808	5,994	272	116	7	..	2,460	19	5	..	26
	11	Khulna ..	833,612	762,175	1,595,787	5,365	265	67	..	..	992	27	6	..	28
Rajshahi	12	Rajshahi	726,117	675,837	1,401,954	5,240	330	194	21	..	2,307	2	5	..	28
	13	Dinajpur	912,329	823,947	1,736,276	5,037	269	25	86	..	2,600	8	16	..	253
	14	Jalpaiguri	521,824	442,571	964,395	3,645	265	2	..	..	1,191	18	6	..	11
	15	Darjeeling	158,030	140,420	298,450	894	54	..	..	..	200	..	..	..	18
	16	Rangpur	1,343,786	1,230,250	2,574,036	9,286	943	10	24	..	3,342	13	35	..	236
	17	Bogra ..	548,496	523,104	1,071,600	3,205	1	..	..	..	1,133	21	21	..	36
	18	Pabna .	709,076	682,207	1,391,283	6,290	374	91	6	..	1,189	13	3	..	45
	19	Malda ..	510,421	510,612	1,021,033	3,797	31	164	30	..	1,258	1	2	..	50
Dacca ..	20	Dacca ..	1,642,626	1,617,244	3,259,870	15,979	706	1,276	146	..	1,543	31	57	..	155
	21	Mymensingh	2,594,444	2,408,565	5,003,009	20,271	1,282	162	60	..	2,734	41	21	..	122
	22	Faridpur	1,181,717	1,138,088	2,319,805	13,135	517	1,665	12	..	1,772	13	14	..	91
	23	Bakarganj	1,475,688	1,416,687	2,892,375	9,424	271	315	..	..	1,676	47	12	..	373
Chittagong	24	Chittagong	837,839	906,043	1,743,882	5,476	367	433	37	..	751	71	5	..	140
	25	Noakhali	851,010	842,646	1,693,656	6,894	455	754	42	..	382	16	4	..	184
	26	Tippera ..	1,551,694	1,483,176	3,034,870	14,119	803	301	30	..	692	41	8	..	234
	27	Chittagong Hill Tracts.													Not
		Total of month for Bengal.	23,875,876	22,779,347	46,655,223	164,717	8,147	6,941	778	..	33,287	576	252	..	2,145
		Total of corresponding month of previous year.	..	..	..	177,442	9,457	4,139	284	..	39,829	679	204	3	1,778
		Increase + or decrease −.	..	..	..	−12,725	−1,310	+2,802	+494	..	−6,542	−103	+48	− 3	+367

Remarks.—1. The above table is compiled from returns collected by the Subdivisional Officers and submitted to the Director of
individual district probably only approximate to the actual.
2. The vital statistics of municipalities with a population of less than 10,000 have been included in this statement with
3. Divisional totals and the birth and death ratios per mille per annum have been omitted from this statement according to

Calcutta, the 17th March 1937.

excluding towns with a population of 10,000 and over in Bengal.

registered.

Influenza.	Other fevers.	Dysentery.	Diarrhœa.	Pneumonia.	Pulmonary tuberculosis.	Other respiratory diseases.	Injuries including suicide.	Deaths from child-birth.	Other causes.	Total of all causes.			Total of corresponding month of previous year.			No.	Districts.
										Male.	Female.	Total.	Male.	Female.	Total.		
3	553	29	43	101	22	66	42	28	428	1,043	913	1,956	1,118	1,076	2,194	1	Burdwan.
2	619	11	10	43	32	67	28	21	262	859	824	1,683	779	825	1,604	2	Birbhum.
3	590	14	82	59	44	45	30	26	378	846	794	1,640	899	821	1,720	3	Bankura.
8	1,773	147	157	286	50	148	120	123	1,051	2,833	3,034	5,867	3,001	3,179	6,180	4	Midnapur.
3	236	19	120	189	32	66	40	37	309	796	831	1,627	1,047	1,051	2,098	5	Hooghly.
..	294	50	155	78	39	66	39	14	267	596	547	1,143	699	674	1,373	6	Howrah.
3	1,949	63	63	160	52	90	111	47	688	1,918	1,828	3,746	2,308	2,277	4,585	7	24-Parganas.
..	527	36	28	138	20	27	71	72	495	1,953	2,026	3,979	2,129	2,221	4,350	8	Nadia.
1	430	28	30	19	20	24	35	25	480	1,355	1,382	2,737	1,289	1,185	2,474	9	Murshidabad.
2	569	11	27	109	41	55	47	75	398	1,954	2,013	3,967	2,532	2,610	5,142	10	Jessore.
5	828	28	37	29	25	47	75	61	923	1,616	1,562	3,178	2,148	2,217	4,365	11	Khulna.
1	495	37	17	90	4	33	63	101	567	1,973	1,992	3,965	1,899	2,180	4,079	12	Rajshahi.
41	1,222	47	40	330	47	85	40	160	324	2,608	2,716	5,324	2,569	2,514	5,083	13	Dinajpur.
20	867	84	66	395	61	47	28	117	270	1,502	1,681	3,183	1,496	1,366	2,862	14	Jalpaiguri.
7	249	23	3	24	30	9	7	3	134	354	353	707	368	367	735	15	Darjeeling.
9	2,203	68	67	191	50	89	37	261	454	3,495	3,594	7,089	3,985	3,968	7,953	16	Rangpur.
3	496	25	22	54	13	25	29	101	242	1,081	1,140	2,221	1,071	1,196	2,267	17	Bogra.
3	781	28	28	94	22	48	46	73	482	1,475	1,477	2,952	1,875	2,027	3,902	18	Pabna.
1	178	6	16	9	6	14	50	22	192	1,012	987	1,999	888	788	1,676	19	Malda.
3	2,998	609	294	126	95	214	48	196	1,800	4,730	4,861	9,591	3,740	3,907	7,647	20	Dacca.
15	4,296	238	121	124	127	140	102	246	2,171	5,348	5,372	10,720	5,547	5,417	10,964	21	Mymensingh.
4	1,936	256	148	298	30	178	64	134	1,161	3,806	3,970	7,776	3,311	3,550	6,861	22	Faridpur.
94	2,185	215	117	338	26	443	50	99	928	3,397	3,521	6,918	4,383	4,532	8,915	23	Bakarganj.
7	2,068	75	67	168	13	31	53	60	190	2,081	2,088	4,169	1,726	1,707	3,433	24	Chittagong.
7	1,634	138	78	97	13	106	90	101	552	1,989	2,209	4,198	1,904	2,088	3,992	25	Noakhali.
6	2,218	405	94	63	36	95	65	134	1,781	3,154	3,049	6,203	3,050	3,091	6,141	26	Tippera.
																27	Chittagong Hill Tracts.
under registration.																	
251	32,194	2,690	1,930	3,612	950	2,258	1,410	2,337	16,927	53,774	54,764	108,538	..	..	..		
193	33,376	2,121	1,791	3,777	1,110	2,216	1,214	2,318	17,563	55,761	56,834	112,595	..	..	..		
+58	−1,182	+569	+139	−165	−160	+42	+196	−19	−636	−1,987	−2,070	−4,057	..	..	..		

Public Health by the District Health Officers. Taken as a whole, the statement possesses a relative value, although the figures for those of the respective districts as ordered in Government of Bengal, Municipal Department, letter No. 118 San., dated the 8th February 1918, Government of India, Education Department, letter No. 93, dated the 26th March 1918.

A. C. CHATTERJI, M.B., D.P.H., LT.-COL., I.M.S., *Director of Public Health, Bengal.*

Statement of weekly gauge readings on the river Ganges at Rampur Boalia for the week ending the 27th March 1937.

Date.	Hour.	Height of surface above P. W. D. datum.	Height of surface above P. W. D. datum on the same date last year.	Remarks.
1937.				
21st March	7 a.m.	37·16	34·80	Value of B. M. on Rajshahi College step = 64·73 P. W. D. Zero of gauge = 29·26 P. W. D.
22nd "	7 "	37·06	34·75	
23rd "	7 "	37·01	34·70	
24th "	7 "	36·96	34·65	
25th "	7 "	36·91	34·60	
26th "	7 "	36·86	34·55	
27th "	7 "	36·76	34·50	

Highest recorded level on 26-8-1879 = 64·24.
Lowest recorded level on 24-4-1931 = 32·05.

S. GUPTA, *Subdivisional Officer,*
Irrigation Department, Rajshahi.

Rampur Boalia, the 27th March 1937.

DISTRICT REPORTS ON WEATHER AND CROPS.

For the week ending on the 31st March 1937.

Summary.—During the week the weather was hot and practically dry. Progress of sowings of jute and paddy and the growth of the existing plants are very slow for want of rain. Harvesting of *rabi* crops is in brisk progress. Condition of standing crops is generally fair. The average price of common rice for the province has fallen by about 0·40 per cent. as compared with that of the previous week.

Serial No.	District and sub-division.	Rainfall.	Price of common rice, in seers, per rupee.		Character of the weather, condition of crops, etc.
			This week.	Previous week.	
1	2	3	4	5	6
		Inches.			
1	24-Parganas ..	Nil	11½	11 5/16	Weather seasonable. Fodder and water are sufficient. Condition of crop is favourable. No export or import of paddy is reported.
	Diamond Harbour..	0·05	12	11¾	
	Barrackpore ..	Nil	12	12	
	Baraset ..	Nil	12	12	
	Basirhat ..	Nil	13	13	
2	Nadia ..	Nil	12 1/16	11 13/16	Weather seasonable. Prospect of standing crops is, on the whole, fair, but in Meherpur it is bad. *Rabi* crops are being harvested. Fodder and water are sufficient. No large import or export except in Sadar where there is a good import of rice.
	Kushtia ..	Nil	11	11	
	Meherpur ..	Nil	10	10	
	Chuadanga ..	Nil	11½	11½	
	Ranaghat ..	Nil	9½	9½	
3	Murshidabad ..	Nil	12½	13	Weather seasonable. Prospects of crops are favourable. Fodder and water are sufficient. No large import or export. Stock of rice is sufficient.
	Lalbagh ..	Nil	13	13	
	Jangipur ..	Nil	13	13	
	Kandi ..	Nil	14	14	
4	Jessore ..	Nil	11½	11½	Weather seasonable. Prospects of standing crops are fair. No large export or import. Fodder and water are sufficient. Cattle-disease is reported from Salikha police station.
	Jhenidah ..	Nil	12	12	
	Magura ..	Nil	11	11	
	Narail ..	Nil	11	11	
	Bongaon ..	Nil	12	12	
5	Khulna ..	Nil	13	13	Weather seasonable. Fodder and water are sufficient.
	Satkhira ..	(*n*)	(*n*)	13	
	Bagerhat ..	Nil	11	11	

(*n*) Not reported.

Serial No.	District and sub-division.	Rainfall.	Price of common rice, in seers, per rupee.		Character of the weather, condition of crops, etc.
			This week.	Previous week.	
1	2	3	4	5	6
		Inches.			
6	Burdwan ..	Nil	13*	9½	Weather seasonable. Condition of crop is favourable. Fodder and water are sufficient.
	Asansol ..	Nil	10	10	
	Katwa ..	Nil	13*	13	
	Kalna ..	Nil	11¼*	8¼	
7	Birbhum ..	Nil	14	13	Weather seasonable. Prospects of standing crops are good. Fodder and water are sufficient.
	Rampurhat ..	Nil	13	13	
8	Bankura ..	0·00	13	13	Weather seasonable. Pressing of sugarcane continues. Prospects of standing crops are good. No large export or import. Fodder and water are sufficient. Cattle-disease is reported from Bankura and Khatra thanas.
	Vishnupur ..	0·00	13¾	13¾	
9	Midnapore ..	Nil	13	13	Fodder and water are sufficient. Sowing of sugarcane continues.
	Contai ..	0·96	14	14	
	Tamluk ..	0·16	13	15	
	Ghatal ..	Nil	14½	15¾	
	Jhargram ..	0.47	13	13	
10	Hooghly ..	Nil	10½	10½	Weather seasonable. Fodder and water are sufficient.
	Serampore ..	Nil	10½	11	
	Arambagh ..	Nil	11	11	
11	Howrah ..	Nil	10	10	Weather seasonable. Rain is wanted for standing crops. Fodder and water are sufficient.
	Uluberia ..	0·25	10	10	
12	Rajshahi (Rampur-Boalia).	Nil	10½	10	Weather seasonable. Late rain has affected the outturn of *rabi* crops to some extent. Fodder and water are sufficient.
	Naogaon ..	Nil	11½	11½	
	Nator ..	Nil	10½	10½	
13	Dinajpur ..	0·02	10	10	Weather seasonable. Fodder and water are sufficient. Cattle-disease is reported from Birganj and Khansama thanas.
	Thakurgaon ..	Nil	13	13	
	Balurghat ..	Nil	13 5/16	13 5/16	
14	Jalpaiguri ..	Nil	13	(*n*)	Weather seasonable. Prospect of standing crop is fair. Fodder and water are sufficient.
	Alipur ..	Nil	11	(*n*)	

(*n*) Not reported.

* New.

Serial No.	District and sub-division.	Rainfall.	Price of common rice, in seers, per rupee.		Character of the weather, condition of crops, etc.
			This week.	Previous week.	
1	2	3	4	5	6
		Inches.			
15	Darjeeling ..	Nil	8	8	Weather seasonable. Condition of standing crops is fair. No damage. Fodder and water are sufficient
	Kurseong ..	Nil	9	9	
	Siliguri ..	Nil	12	12	
	Kalimpong ..	Nil	7½	7½	
16	Rangpur ..	Nil	11½	11½	Weather seasonable. Prospects of standing crops are fair. No large export or import. Fodder and water are sufficient. Sowing of *aus* paddy and jute continues. Cattle-disease is reported from Fulbari thana.
	Nilphamari ..	Nil	11	11	
	Kurigram ..	Nil	10	(*n*)	
	Gaibandha ..	(*n*)	(*n*)	(*n*)	
17	Bogra ..	Nil	12¾	12¾	Agricultural operation not affected by weather condition. Ploughing, sowing, etc., going on as usual. Condition of standing crops is fair. Fodder and water are sufficient. No damage is reported.
18	Pabna ..	Nil	12	12	Weather cloudy. Harvesting of *rabi* crops is almost over. Fodder and water are sufficient.
	Serajganj ..	Nil	10½	10½	
19	Malda ..	Nil	12½	13	Weather seasonable. Harvesting of *rabi* crops continues. Fodder and water are available.
20	Cooch Behar ..	(*n*)	(*n*)	(*n*)	Report not received.
21	Dacca ..	Nil	10¾	10¾	Rainfall at North Sadar (Kapasia) (*n*) inches. Weather seasonable. Prospects of standing crops are reported to be fair. No large export or import. Fodder and water are sufficient. Cattle-disease exists in Keraniganj police-station.
	Manikganj ..	Nil	10½	10½	
	Narayanganj ..	0·04	12	12	
	Munshiganj ..	0·21	10¾	10¾	

(*n*) Not reported.

Serial No.	District and sub-division.	Rainfall.	Price of common rice, in seers, per rupee. This week.	Price of common rice, in seers, per rupee. Previous week.	Character of the weather, condition of crops, etc.
1	2	3	4	5	6
		Inches.			
22	Mymensingh ..	Nil	10½	10½	Weather seasonable. Condition of crops is fair. Agricultural operation is normal as at this time of the year. Fodder and water are available.
	Jamalpur ..	Nil	11½	(n)	
	Tangail ..	Nil	11	11	
	Netrakona ..	Nil	12½	(n)	
	Kishorganj ..	Nil	10½	10½	
23	Faridpur ..	0·00	12	12	Weather seasonable. Condition of standing crops is fair. Fodder and water are sufficient.
	Goalundo (Rajbari)	0·00	10½	10½	
	Madaripur ..	0·00	11½	11½	
	Gopalganj (a) ..	0·00	11	12	
24	Bakarganj (Barisal)	Nil	11	11	Weather seasonable. Prospects of standing crops are good in all subdivisions except in Sadar where it is not good. Fodder and water are sufficient. Cattle-disease is reported from Bhola and Pirojpur subdivisions only.
	Pirojpur ..	Nil	11½	11½	
	Patuakhali ..	Nil	10½	10½	
	Dakshin Shabazpur (Bhola).	Nil	11	11¾	
25	Chittagong ..	0·01	11 12*	11 12*	Weather seasonable. Harvesting of *rabi* crops is in progress. Its condition is fair at Sadar and unsatisfactory at Cox's Bazar. Fodder and water are available. Cattle-disease exists in places. Panga salt sells at 14½ seers at Sadar and 13 seers at Cox's Bazar.
	Cox's Bazar ..	Nil	12	(n)	
26	Tippera (Comilla) ..	Nil	13½	13	Prospects of standing crops are fair.
	Brahmanbaria ..	Nil	13	13	
	Chandpur ..	Nil	12	12	
27	Noakhali ..	Nil	12	12	Fodder and water are sufficient. Cattle-disease still exists in Feni and Chhagalnaya thanas.
	Feni ..	Nil	13	13	
28	Chittagong Hill Tracts.	Nil	14	14	Weather seasonable. Its effects on agricultural operation are favourable. Fodder and water are sufficient.
29	Tripura State ..	(n)	(n)	(n)	Reports not received.

(a) The rainfall at Haridaspur, which is very near to Gopalganj, is shown here.
(n) Not reported. * Burma rice.

S. ABDULLAH, for *Director of Agriculture, Bengal.*

Dacca, the 5th April 1937.

BOARD OF REVENUE, BENGAL.

NOTIFICATION—No. 5327 Misc.

Calcutta, the 2nd April, 1937.

The price-lists of staple food-crops in the local areas of Bengal, prepared under section 39 of the Bengal Tenancy Act, 1885 (VIII of 1885), for the period from 1st October to 31st December 1936 having been approved by the Board of Revenue, Bengal, are published for general information.

By order of the Board of Revenue, Bengal,

S. BANERJEE, *Secretary*.

Price-list (retail) of Staple Food-Crops in the local areas of Bengal, prepared under section 39 of the Bengal Tenancy Act (VIII of 1885), for three months from October to December 1936.

BURDWAN DIVISION.

Local areas.	Marts at which prices were taken.	Staple food-crop or crops.	Market days for the preparation of price-lists.	Quantities per rupee in seers of 80 tolas, Company's weight. October.		November.		December.		Average price for the quarter ending the 31st December 1936.
				S.	c.	S.	c.	S.	c.	S. c.
BURDWAN.										
Subdivision—										
Sadar ..	Burdwan Nutunganj.	Rice ..	Last day of every month ..	10	0	13	8	10	0	11 0
Asansol ..	Raniganj ..	Do. ..	27th of every month ..	9	0	9	0	9	8	9 3
Katwa ..	Katwa ..	Do. ..	Ditto	10	0	13	0	13	0	12 9
Kalna ..	Kalna ..	Do. ..	28th of every month ..	8	8	8	7	12	4	9 12
BIRBHUM.										
Sadar ..	Suri ..	Do. ..	Last day of every month ..	10	8	13	0	12	0	11 13
Rampur Hât	Rampur Hât	Do. ..	Last Monday or Friday of every month.	10	8	11	0	12	8	11 5
BANKURA.										
Sadar ..	Bankura ..	Do. ..	Last day of every month ..	10	0	10	8	13	0	11 2
Vishnupur ..	Vishnupur ..	Do. ..	Ditto	10	8	11	8	11	4	11 1
MIDNAPORE.										
Sadar ..	Colonelgola and School Bazar, town Midnapore.	Do. ..	Ditto	11	11	11	11	11	11	11 11
Jhargram ..	Jhargram ..	Do. ..	First Sunday of each month ..	10	8	10	8	12	8	11 3
Ghatal ..	Ghatal Municipal Market.	Do. ..	27th of every month ..	11	8	11	8	16	12	13 4
Tamluk ..	Tamluk Bazar	Do. ..	Ditto	9	0	9	8	10	8	9 11
Contai ..	Kantanala Bazar, town Contai.	Do. ..	Last market day, *i.e.*, last Sunday or Thursday, whichever is nearer to the last day of every month.	11	0	11	0	14	0	12 0
HOOGHLY.										
Sadar .	Hooghly ..	Do. ..	Last Thursday of every month	11	7	11	0	11	6	11 4
Serampore ..	Serampore ..	Do. .	First or last Saturday of every month.	9	12	10	8	11	0	10 7
Arambagh ..	Arambagh ..	Do. ..	Ditto	10	4	10	8	11	0	10 9
HOWRAH.										
Sadar ..	Ramkristopur	Do. ..	Last day of every month ..	9	8	9	8	9	8	9 8
Uluberia ..	Uluberia ..	Do. ..	Last Saturday of every month	10	0	10	0	10	12	10 4

PRESIDENCY DIVISION.

				S.	c.	S.	c.	S.	c.	S. c.
24-PARGANAS.										
Subdivision—										
Sadar ..	Chetla Hât ..	Rice ..	Last Wednesday of every month	11	4	11	8	11	8	11 7
Barasat and Barrackpore.	Barasat ..	Do. ..	Last market day which immediately precedes the last Saturday of every month.	12	0	13	5	13	5	12 14
Diamond Harbour.	Magrahât ..	Do. ..	Ditto	9	6	10	15	12	5	10 14
Basirhat ..	Baduria ..	Do. ..	Second Tuesday of every month	9	10	9	8	8	9	9 4

PRESIDENCY DIVISION—*concluded.*

Local areas.	Marts at which prices were taken	Staple food-crop or crops.	Market days for the preparation of price-lists.	Quantities per rupee in seers of 80 tolas, Company's weight. October.		November.		December.		Average price for the quarter ending the 31st December 1936.	
				S.	c.	S.	c.	S.	c.	S.	c.
NADIA.											
Subdivision—											
Sadar ..	Goari ..	Rice ..	Last day of every month ..	8	8	9	8	9	8	9	3
Ranaghat ..	Ranaghat ..	Do. ..	28th of every month ..	9	8	9	8	9	8	9	8
Meherpur ..	Meherpur Kalibazar.	Do. ..	Last Monday of every month	10	4	10	0	9	8	9	15
Chuadanga ..	Chuadanga ..	Do. ..	Saturday immediately preceding the 28th of every month.	9	4	9	4	12	5	10	4
Kushtia ..	Bahadurkhali	Do. ..	28th of every month ..	10	0	10	0	10	0	10	0
MURSHIDABAD.											
Sadar ..	Berhampore Khagra.	Do. ..	Ditto	9	8	12	0	14	0	11	13
Lalbagh ..	Jiaganj ..	Do. ..	First Monday of every month	10	8	12	0	12	0	11	8
Kandi ..	Kandi ..	Do. ..	The last market day before the 28th of every month.	10	0	11	12	14	4	12	0
Jangipur ..	Raghunathganj	Do. ..	Ditto	11	0	13	0	14	0	12	12
JESSORE.											
Sadar ..	Jessore ..	Do. ..	Monday or Friday falling on or next before the last day of every month.	11	4	12	0	12	8	11	15
Narail ..	Rupganj ..	Do ..	Sunday or Thursday falling on or next before the 28th of every month, except February, in which the Monday or Friday falling on or next before the 26th.	11	0	11	0	11	0	11	0
Magura ..	Magura ..	Do. ..	Thursday or Sunday falling on or next before the 28th of every month, except February, in which the Thursday falling on or next before the 26th.	12	0	12	0	12	0	12	0
Jhenida ..	Jhenida ..	Do. ..	Ditto	12	0	11	8	12	0	11	13
Bongaon ..	Bongaon	Do. ..	Monday or Friday falling on or next before the 28th of every month, except February, in which the Monday or Friday falling on or next before the 26th.	9	8	9	8	9	8	9	8
KHULNA.											
Sadar ..	Khulna Bazar (*alias* Saheberhât).	Do. ..	Last market day of every month	8	14	11	0	11	12	10	9
Satkhira ..	Satkhira Bazar (*alias* Pranshire).	Do. ..	28th of every month, except February, when the price will be taken on the 26th.	11	4	13	9	13	2	12	10
Bagerhat ..	Bagerhat ..	Do. ..	Sunday falling on or before the 28th of every month, except February, when the price will be taken on the Sunday falling on or before the 26th.	8	0	8	0	10	8	8	13

DACCA DIVISION.

				S.	c.	S.	c.	S.	c.	S.	c.
DACCA.											
Subdivision—											
Narayanganj	Narayanganj Bazar.	Rice ..	Last market day before the 13th of every month.	12	0	12	0	12	0	12	0
Sadar ..	Dacca Town Imamganj Bazar.	Do. ..	Last market day of every month	11	0	11	8	9	8	10	11
Manikganj ..	Dasora Bazar	Do. ..	Market day falling on or immediately before the 28th of every month.	10	8	10	6	10	8	10	7
Munshiganj ..	Mirkadim ..	Do. ..	Last Sunday of every month	10	0	10	0	9	8	9	12

DACCA DIVISION—*concluded.*

Local areas.	Marts at which prices were taken.	Staple food-crop or crops.	Market days for the preparation of price-lists.	Quantities per rupee in seers of 80 tolas, Company's weight			Average price for the quarter ending the 31st December 1936.
				October.	November.	December.	
MYMENSINGH.				S. c.	S. c.	S. c.	S. c
Subdivision—							
Jamalpur ..	Raniganj ..	Rice ..	Last market day of the 3rd week of every month.	10 8	13 0	12 0	11 13
Tangail ..	Kagmari ..	Do. ..	Ditto	10 0	10 0	10 0	10 0
Netrakona ..	Netrakona ..	Do. ..	Ditto	10 0	11 0	13 0	11 5
Sadar ..	Mechuabazar ..	Do. ..	Ditto	10 0	10 8	11 0	10 8
Kishorganj ..	Kishorganj ..	Do. ..	Ditto	10 0	10 0	11 0	10 5
FARIDPUR.							
Sadar ..	Faridpur ..	Do. ..	Last market day of every month	10 0	10 0	12 0	10 11
Madaripur ..	Madaripur ..	Do. ..	On the market day preceding the 28th of every month.	11 0	11 0	11 8	11 5
Goalundo ..	Rajbari ..	Do. ..	Ditto	10 8	10 8	10 8	10 8
Gopalganj ..	Gopalganj ..	Do. ..	Last market day of every month	11 0	13 0	13 0	12 5
BAKARGANJ.							
Patuakhali ..	Patuakhali ..	Do. ..	Last market day preceding the last day of every month.	10 8	10 0	10 0	10 3
Pirojpur ..	Rajganj ..	Do. ..	Ditto	9 10	9 10	9 0	9 7
Sadar ..	Barisal ..	Do. ..	Last day of every month ..	9 8	9 8	9 8	9 8
Dakshin Shahbazpur.	Bhola Hât ..	Do. ..	Last market day preceding the last day of every month.	9 8	9 14	10 0	9 13

CHITTAGONG DIVISION.

TIPPERA.				S. c.	S. c.	S. c.	S. c.
Subdivision—							
Brahmanbaria	Brahmanbaria	Rice ..	Market day immediately preceding the 28th of every month.	12 8	12 3	12 8	12 6
Sadar ..	Rajganja Bazar, Comilla.	Do. ..	Last market day of every month	10 0	10 0	13 5	11 2
Chandpur ..	Chandpur Old Bazar.	Do. ..	Market day immediately preceding the 28th of every month.	10 0	10 0	10 1	10 0
NOAKHALI.							
Sadar ..	Bara Bazar ..	Do. ..	Last market day of every month.	11 0	13 3	13 11	12 10
Feni ..	Feni Bazar ..	Do. ..	Ditto	11 13	14 0	14 13	13 9
CHITTAGONG.							
Sadar ..	Buxir Hât ..	Do. ..	Last Saturday of every month	10 0	10 0	11 0	10 5
Cox's Bazar ..	Cox's Bazar ..	Do. ..	Friday immediately preceding the 26th, or the 26th if that day happens to be a Friday.	11 8	13 0	12 0	12 3

RAJSHAHI DIVISION.

RAJSHAHI.				S. c.	S. c.	S. c.	S. c.
Subdivision—							
Sadar ..	Saheb Bazar ..	Rice ..	Last day of every month ..	9 8	9 8	9 4	9 7
Naogaon ..	Naogaon ..	Do. ..	Ditto	10 8	10 4	11 0	10 9
Nator ..	Nator ..	Do. ..	Ditto	10 14	11 4	13 8	11 14
DINAJPUR.							
Sadar ..	Rail Bazar Hât	Do. ..	Last market day of every month.	11 0	9 0	9 0	9 11
Thakurgaon	Lahirihat ..	Do. ..	....	8 0	8 0	14 0	10 0
Balurghat ..	Balurghat ..	Do. ..	....	10 0	13 0	13 5	12 2
JALPAIGURI.							
Alipur Duars	Alipur Duars ..	Do. ..	....	9 0	9 0	12 0	10 0
Sadar ..	Dinbazar ..	Do. ..	15th of every month ..	10 0	8 8	13 0	10 8

RAJSHAHI DIVISION—*concluded.*

Local areas.	Marts at which prices were taken.	Staple food-crop or crops.	Market days for the preparation of price-lists.	Quantities per rupee in seers of 80 tolas, Company's weight.			Average price for the quarter ending the 31st December 1936.
				October.	November.	December.	
RANGPUR.				S. c.	S. c.	S. c.	S. c.
Subdivision—							
Sadar ..	Nawabganj Chaliaamad, Rangpur.	Rice ..	Last Wednesday or Saturday, whichever may be close to the last day of every month.	9 0	9 0	12 15	10 5
Nilphamari ..	Sagarmacha ..	Do. ..	Last Wednesday or Sunday, whichever may be close to the 28th of every month.	11 0	13 0	12 0	12 0
Kurigram ..	Kurigram ..	Do ..	Last Saturday or Tuesday next to the 28th of every month.	9 0	9 0	9 0	9 0
Gaibandha ..	Gaibandha Bazar	Do. ..	27th of every month ..	9 0	9 0	10 0	9 5
BOGRA.							
District of Bogra	Kalitala Hât ..	Do. ..	Last Sunday of every month ..	9 4	9 9	12 8	10 7
PABNA.							
Subdivision—							
Sadar ..	Pabna Bazar ..	Do. ..	15th of every month ..	8 12	8 12	9 0	8 13
Seraiganj ..	Fariapati at Serajganj.	Do. ..	Ditto	10 12	10 8	10 8	10 9
MALDA.							
District of Malda	Balia Nawabganj	Do. ..	Second Wednesday of every month.	11 4	13 5	13 8	12 11

Statement showing the gauge readings at Dacca Waterworks Station on the river Buriganga for the week ending 27th March 1937.

Date.	At highest water.		At lowest water.		Commencement of—		Remarks.	
	Time.	Reading.	Time.	Reading.	Ebb tide.	Flow tide.	7 a.m.	5 p.m.
1937.								
21st March ..	18-0	4·15	12-0	3·55	18-14	12-14	4·05	4·0
22nd " ..	9-0	4·0	14-0	3·4	9-16	14-14	3·8	3·65
23rd " ..	12-0	4·0	16-0	3·35	12-18	16-16	3·75	3·4
24th " ..	9-0	4·45	17-0	3·6	9-16	17-14	4·3	3·6
25th " ..	9-30	5·0	18-0	4·45	9-44	18-12	4·75	4·6
26th " ..	10-0	5·35	18-0	4·65	10-12	18-10	5·0	4·7
27th " ..	11-0	5·55	18-0	4·9	11-12	18-8	5·2	5·0

Notable high and low water-levels of previous years.

		Taken at high tide.			Taken at low tide.
27th August	1906 ..	70·5	23rd February	1907 ..	51·06
5th September	1909 ..	66·86	13th "	1908 ..	51·06
10th August	1910 ..	69·86	12th March	1912 ..	51·06
1st "	1911 ..	68·46	6th "	1914 ..	50·60
13th "	1912 ..	67·16	22nd February	1915 ..	50·30
31st "	1915 ..	69·7	15th "	1916 ..	50·60
8th "	1916 ..	68·1	3rd March	1917 ..	51·0
12th "	1917 ..	67·1	21st February	1918 ..	51·40
13th "	1918 ..	69·12	26th "	1919 ..	50·4
2nd "	1919 ..	66·8	18th "	1920 ..	50·9
8th September	1920 ..	66·9	19th "	1921 ..	50·9
28th July	1921 ..	68·4	8th March	1922 ..	51·05
10th August	1922 ..	68·00	14th "	1923 ..	50·8
31st July	1923 ..	66·15	16th February	1924 ..	50·50
29th August	1924 ..	68·82	5th March	1925 ..	50·9
8th September	1925 ..	68·52	9th February	1926 ..	2·2
15th August	1926 ..	19·6	27th "	1927 ..	2·10
17th September	1927 ..	18·70	16th "	1928 ..	2·2
22nd August	1928 ..	20·0	21st "	1929 ..	2·0
13th July	1929 ..	17·8	24th "	1930 ..	2·3
12th September	1930 ..	18·65	28th "	1931 ..	2·2
16th August	1931 ..	21·7	18th "	1932 ..	1·8
6th September	1932 ..	18·5	6th "	1933 ..	2·10
7th "	1933 .	17·80	26th March	1934 ..	2·40
23rd August	1934 ..	19·35	15th February	1935 ..	1·70
1st September	1935 ..	19·80	3rd March	1936 ..	1·90
21st August	1936 ..	19·35			

N.B.—Zero of the gauge at Dacca Waterworks prior to 11 a.m. on the 8th January 1926= —48·51 with reference to P. W. D. datum.

Zero of the gauge at Dacca Waterworks since 11 a.m. of the 8th January 1926=0·00 with reference to P. W. D. datum.

M. K. BHATTACHARJEE, *Executive Engineer,*
Khulna Division.

Khulna, the 1st April 1937.

FORM C—BENGAL.

STATEMENT OF COTTON PRESSED IN THE BENGAL PRESIDENCY FOR THE WEEK ENDING THE 26th MARCH 1937.

[Section 5 (2) of the Cotton Ginning and Pressing Factories Act, 1925.]

Name of Division or block.	Number of bales pressed.				District included in the block.
	During the week.	During the corresponding week last year.	Since 1st September 1936 (the date prescribed by the Local Government as the commencement of the season).	During the corresponding period last year.	
The Bengal Presidency	1,753 or 1,738·12 bales of 400 lbs. each.	2,357	22,227	26,931	All districts in the Presidency.

C. S. STEEL,

Chief Inspector of Factories, Bengal (offg.).

Printed and published by the Superintendent, Government Printing, Bengal Government Press, Alipore, Bengal, on the 8th April 1937.

Registered No. C207

The Calcutta Gazette

Extraordinary

Published by Authority

THURSDAY, APRIL 8, 1937.

GOVERNMENT OF BENGAL.

HOME DEPARTMENT.

Constitution and Elections.

NOTIFICATION.

No. 8837A.R. — 7th April 1937. — The following notification by His Excellency the Governor is published for general information:—

"In exercise of the power conferred by sub-section (*3*) of section 65 read with sub-section (*5*) of the said section of the Government of India Act, 1935, I hereby appoint Sir George Riddoch Campbell, a member of the Bengal Legislative Council, to perform the duties of the office of the President of the said Council until a President is elected.

JOHN ANDERSON,
Governor."

CALCUTTA,
The 7th April 1937.

G. P. HOGG,
Secy. to the Govt. of Bengal.

Printed and published by the Superintendent, Government Printing, Bengal Government Press, Alipore, Bengal, on the 8th April 1937.

Registered No. C207

The Calcutta Gazette

Extraordinary

Published by Authority

WEDNESDAY, APRIL 14, 1937.

GOVERNMENT OF BENGAL.

FINANCE DEPARTMENT.

NOTIFICATION.

No. 3872F.—13th April 1937.—In exercise of the power conferred by sub-section (*1*) of section 265 of the Government of India Act, 1935, the Governor is pleased to appoint Lt.-Col. Sir Hasan Suhrawardy, Kt., O.B.E., M.D., F.R.C.S., D.P.H., and Mr. Sudhansu Mohan Bose, Barrister-at-Law, to be Members of the Public Service Commission for the Province of Bengal, with effect from the 13th April 1937.

D. GLADDING,
Secy. to the Govt. of Bengal.

Printed and published by the Superintendent, Government Printing, Bengal Government Press, Alipore, Bengal, on the 14th April 1937.

Registered No. C207

No. 15 of 1937

The Calcutta Gazette

Published by Authority

THURSDAY, APRIL 15, 1937.

CONTENTS:

	Page.
PART I.—Orders and Notifications by the Governor of Bengal, the Government of Bengal, the High Court, Government Treasury, etc.	859—901
PART IA.—Orders and Notifications by the Government of India republished for general information	407—930
PART IB.—Educational Notices ..	415—432
PART II.—Advertisements	367—374
PART III.—Acts of the Bengal Legislative Council	*Nil*
PART IV.—Bills introduced in the Bengal Legislative Council, Reports of Select Committees presented or to be presented to that Council and Bills published before introduction in that Council ..	*Nil*
PART V.—Acts of the Indian Legislature assented to by the Governor-General and Ordinances promulgated under section 72 of the Government of India Act—	
The Land Customs (Amendment) Act, 1937	3—4
The Arbitration (Protocol and Convention) Act, 1937	5—11
The Workmen's Compensation (Amendment) Act, 1937	12
The Indian Electricity (Amendment) Act, 1937	13
The Indian Boilers (Amendment) Act, 1937	14—15
The Indian Income-tax (Amendment) Act, 1937	16
The Indian Lac Cess (Amendment) Act, 1937	17
PART VI.—Bills introduced in the Council of State and Legislative Assembly, Reports of Select Committees presented to the Council and Assembly and Bills published under rule 18 of the Indian Legislative Rules	*Nil*
SUPPLEMENT No. 15:—	
Cotton Ginning and Pressing—Weekly Gauge Readings—Monthly Weather and Crop Report—Weekly Weather and Crop Report—Prices-current—Weekly Vital Statistics .. .	431—444

PART I

Orders and Notifications by the Governor of Bengal, the Government of Bengal, the High Court, Government Treasury, etc.

Orders by His Excellency the Governor of Bengal.

No. 4158A.—7th April 1937.—His Excellency the Governor of Bengal has been pleased to appoint Captain C. R. Bluett, R.I.N., Principal Officer, Mercantile Marine Department, to be an Honorary Aide-de-Camp on his personal staff, *vice* Captain L. W. R. T. Turbett, O.B.E., R.I.N., resigned.

No. 4172A.—7th April 1937.—His Excellency the Governor has been pleased to grant to Major T. M. Lunham (Poona Horse, 17th Queen Victoria Own Cavalry), Commandant of the Bengal Bodyguard, leave *ex*-India from the 15th April 1937 to the 29th October 1937, inclusive, viz., leave on average pay for one month and twenty-one days, under rule 100(*a*)(*i*) of the Fundamental Rules and furlough under the Military Rules for the remaining period.

HOME DEPARTMENT.

Appointment.

No. 4241A.

APPOINTMENTS AND TRANSFERS.

General.

Calcutta.—No. 4122A.—6th April 1937.—The services of Mr. L. A. Chapman, I.C.S., Under Secretary to the Government of Bengal in the Finance Department, are placed at the disposal of the Government of India in the Finance Department.

Mymensingh.—No. 4139A.—7th April 1937.—The orders of the 15th March 1937, appointing Mr. K. G. Murshed, I.C.S., officiating Magistrate and Collector, Mymensingh, to be Additional District Magistrate of that district, are cancelled.

Mymensingh.—No. 4142A.—7th April 1937.—The orders of the 15th March 1937, posting Mr. A. D. Khan, I.C.S., Additional District Magistrate, Mymensingh, as Joint Magistrate and Deputy Collector of that district, are cancelled.

Murshidabad.—No. 4150A.—7th April 1937.—Mr. E. A. Rampezotti, Deputy Magistrate and Deputy Collector, on leave, is posted to the headquarters station of the Murshidabad district.

Chittagong Hill Tracts.—No 4163A.—7th April 1937.—Maulvi Abu Hamid Nurul Huda, Sub-Deputy Collector, Chittagong Hill Tracts, is appointed temporarily to have charge of the Sadar subdivision of that district.

Rangpur.—No. 4175A.—8th April 1937.—Rai Sahib Hira Lal Ray, Deputy Magistrate and Deputy Collector, Rangpur, is appointed temporarily to have charge of the Nilphamari subdivision of that district.

Khulna.—No. 4179A.—8th April 1937.—Babu Paresh Nath Chaturji, who was appointed to be a Deputy Magistrate and Deputy Collector, on probation, under the orders of the 29th December 1936, was posted to the Satkhira subdivision of the Khulna district from the 8th January 1937.

Police.

Mymensingh-Rangpur.—No. 4011A. — 5th April 1937.—Rai Sahib Kshiti Nath Ghosh, Inspector of Police, Mymensingh, is appointed to act, until further orders, as Deputy Superintendent of Police, and is posted to the headquarters station of the Rangpur district.

Rangpur-Howrah.—No. 4012A.—5th April 1937.—Rai Jamini Mohan Kar Bahadur, officiating Deputy Superintendent of Police, Rangpur, is posted to the headquarters station of the Howrah district.

Howrah-Calcutta.—No. 4013A.—5th April 1937.—Rai Sahib Surendra Nath Lahiri, officiating Deputy Superintendent of Police, Howrah, is posted to the Criminal Intelligence Department.

Ecclesiastical.

Birbhum.—No. 4100A.—6th April 1937.—The Reverend S. Johanson of the Santal Mission of the Northern Churches Bengali Work at Narainpur in the district of Birbhum is authorised under section 6 of Act XV of 1872 to solemnize marriages between persons, one or both of whom is or are a Christian or Christians.

2. He is also appointed under Act VI of 1886 to be a Registrar of Births and Deaths for the district of Birbhum.

Calcutta.—No. 4111A.—6th April 1937.—The Reverend D. T. H. McLellan, Second Chaplain, St. Andrew's Church, Calcutta, is appointed to act as Presidency Senior Chaplain, Church of Scotland, Bengal, with effect from the afternoon of the 23rd March 1937, *vice* the Reverend D. F. Mackenzie, granted leave.

CONFIRMATION.

Ecclesiasti

No. 4119A.—6th April 1937.—The Reverend A. J. Pearson, a probationary Chaplain on the Indian Ecclesiastical Establishment, is confirmed as a Junior Chaplain, with effect from the 30th March 1937.

LEAVE.

General.

Burdwan.—No. 4104A.—6th April 1937.—In modification of the orders of the 3rd February 1937, Mr. R. H. G. Johnston, I.C.S., Magistrate and Collector, Burdwan, is allowed leave for eight months and three days, viz., leave on average pay for eight months, under rule 81 (*b*) (*i*) of the Fundamental Rules, with effect from the 5th March 1937, and leave on half average pay for the remaining period, under rule 81 (*d*) of those Rules.

Rangpur.—No. 4126A.—6th April 1937.—Mr. A. C. Hartley, I.C.S., officiating Settlement Officer, Rangpur, is allowed leave from the 1st May 1937 or any subsequent date on which he may avail himself of it, up to the 23rd December 1937, viz., leave on average pay for four months, under rule 81(*b*) (*i*) of the Fundamental Rules, and leave on half average pay for the remaining period, under rule 81(*d*) of those Rules.

Mymensingh.—No. 4135A.—7th April 1937.—Mr. K. G. Murshed, I.C.S., officiating Magistrate and Collector, Mymensingh, is allowed leave on half average pay for four months, under rule 81(*d*) of the Fundamental Rules, with effect from the 19th April 1937 or any subsequent date on which he may be relieved.

Chittagong Hill Tracts.—No. 4161A.—7th April 1937.—Rai Sahib Anil Chandra Lahiri, Deputy Magistrate and Deputy Collector, Chittagong Hill Tracts, is allowed leave on average pay for twelve days, under rule 81(*b*) (*ii*) of the Fundamental Rules, with effect from the 27th April 1937.

No. 4166A.—7th April 1937.—Mr. H. G. S. Bivar, I.C.S., is allowed leave on average pay, under rule 81(*b*) (*i*) of the Fundamental Rules, from the 28th April 1937 or any subsequent date on which he may avail himself of it to the 2nd October 1937, inclusive.

No. 4169A.—7th April 1937.—Mr. K. C. Das Gupta, I.C.S., is allowed leave on average pay, under the proviso to rule 81(*b*) (*ii*) of the Fundamental Rules, from the 28th April 1937 or any subsequent date on which he may avail himself of it to the 23rd December 1937, inclusive.

No. 4185A.—9th April 1937.—Mr. S. S. R. Hattiangadi, I.C.S., was allowed leave on average pay for fourteen days, under rule 81(*b*) (*ii*) of the Fundamental Rules, with effect from the 12th March 1937.

Ecclesiastical.

Calcutta.—No. 4131A.—6th April 1937.—The Ven'ble E. J. Young, Archdeacon of Calcutta and Senior Chaplain, St. John's Church, Calcutta, is allowed leave for four months and twenty-three days, viz., leave on average pay for three months and twenty days, under rule 81(*b*) (*i*) of the Fundamental Rules, with effect from the 20th May 1937 or any subsequent date on which he may be relieved of his duties and in continuation leave on half average pay for the remaining period, under rule 81(*d*) of those Rules.

G. P. HOGG,

Secy. to the Govt. of Bengal.

Political.

NOTIFICATION.

No. 4842P.—6th April 1937.—It is hereby notified that under the provisions of section 133 of the Code of Civil Procedure, 1908 (Act V of 1908), the Governor has been pleased to exempt His Highness Maharaja Jagaddipendra Narayan Bhup Bahadur of Cooch Behar from personal attendance in the Civil Courts.

G. P. HOGG,

Secy. to the Govt. of Bengal.

Police.

NOTIFICATIONS.

No. 1696Pl.—6th April 1937.—In exercise of the powers conferred by section 11 of the Indian Motor Vehicles Act, 1914 (VIII of 1914), the Governor is pleased to make the following amendments in the Bengal Motor Vehicles Rules, 1935, published under notification No. 436Pl., dated the 31st January 1935, at pages 167-263, Part I of the *Calcutta Gazette* of the same date, as subsequently amended:—

Amendments.

(*i*) *For* the first paragraph of rule 29 of the said rules *substitute* the following:—

"Every licence shall be subject to annual renewal and every application for renewal of a licence shall be made in Form GG appended to these rules. If the renewal is effected on or before the date of expiry of the licence, a fee of Rs. 2 for a private licence or a conductor's licence and Rs. 4 for a professional licence shall be charged: if the renewal is effected after the date of expiry, the full fee shall be charged:"

(*ii*) After Form "G" of the forms appended to the said rules *insert* the following:—

"FORM GG.

(*See* rule 29.)

Application for Renewal of Licence.

Note number.....and class.....

To $\frac{\text{drive a}}{\text{act as a conductor}}$.....

Date of expiry of licence.....

Name in full.....

Local address.....

I hereby declare that the licence has not been suspended or cancelled.

The licence is presented with the required fee, Rs.....

Signature of licensee.

Dated the.....day of.....19.....

Professional drivers must appear in person.

Certified that Rs.....is due.

Examining Clerk.

Dated the.....day of.....19.....

The fee, Rs.....mentioned above, has been duly credited, *vide* Receipt No....., dated the.....day of..... 19.....

Cashier.

Renew licence.

Dy. Commr., P. V. D.
District Magistrate.

Dated the.....day of.....19.....

Licence renewed until the.....day of.....19.....

Licence Clerk,
Motor Vehicles Branch.

Station.

Dated the.....day of.....19.....

(On the reverse.)

Application for a Duplicate Badge, Licence or Registration Certificate.

.....

(Note whether badge, licence or registration certificate and class.)

No.....

Name in full.....

Local address.....

I hereby declare that the.....has not been suspended or cancelled.

The required fee, Rs....., is presented herewith.

Signature of licensee or registered owner.

Dated the.....day of.....19.....

Certified that Rs.....is due.

Examining Clerk.

Dated the.....day of.....19.....

The fee, Rs.....mentioned above, has been duly credited, *vide* Receipt No....., dated the.....day of..... 19.....

Cashier.

Issue duplicate.

Dy. Commr. of Police, P. V. D.
District Magistrate.

Dated the.....day of.....19.....

Duplicate issued, to expire on the.....day of..... 19.....

Licence or Registration Clerk.

Station.

Dated the.....day of.....19...."

No. 1730Pl.—6th April 1937.—In exercise of the powers conferred by section 11 of the Indian Motor Vehicles Act, 1914 (VIII of 1914), the Governor is pleased to make the following amendments in the Calcutta and Howrah Motor Vehicles Rules, 1930, published under notification No. 1398Pl., dated the 19th March 1930, at pages 415-473, Part I of the *Calcutta Gazette* of the 27th March 1930, as subsequently amended:—

Amendments.

(*i*) *For* the first paragraph of rule 29 of the said rules *substitute* the following:—

"Every licence shall be subject to annual renewal and every application for renewal of a licence shall be made in Form FF appended to these rules. If the renewal is effected on or before the date of expiry of the licence, a fee of Rs. 2 for a private licence or a conductor's licence and Rs. 4 for a professional licence shall be charged: if the renewal is effected after the date of expiry, the full fee shall be charged:"

(*ii*) After Form "F" of the forms appended to the said rules *insert* the following:—

"FORM FF.

(*See* rule 29.)

Application for Renewal of Licence.

Note number.....and class.....

To $\frac{\text{drive a}}{\text{act as a conductor}}$.....

Date of expiry of licence.....

Name in full.....

Local address.....

I hereby declare that the licence has not been suspended or cancelled.

The licence is presented with the required fee, Rs.....

Signature of licensee.

Dated the.....day of.....19.....

Professional drivers must appear in person.

Certified that Rs.....is due.

Examining Clerk.

Dated the.....day of.....19.....

The fee, Rs.....mentioned above, has been duly credited, *vide* Receipt No....., dated the.....day of..... 19.....

Cashier.

Renew licence.

Dy. Commr., P. V. D.
District Magistrate.

Dated the.....day of.....19.....

Licence renewed until the.....day of.....19.....

Licence Clerk,
Motor Vehicles Branch.

Station.

Dated the.....day of.....19.....

(On the reverse.)

Application for a Duplicate Badge, Licence or Registration Certificate.

.....

(Note whether badge, licence or registration certificate and class.)

No.....

Name in full.....

Local address..... .....

I hereby declare that the.....has not been suspended or cancelled.

The required fee, Rs....., is presented herewith.

Signature of licensee or registered owner.

Dated the.....day of.....19.....

Certified that Rs.....is due.

Examining Clerk.

Dated the.....day of.....19.....

The fee, Rs..... ....mentioned above, has been duly credited, *vide* Receipt No....., dated the.....day of..... 19.....

Cashier.

Issue duplicate.

Dy. Commr. of Police, P. V. D.
District Magistrate.

Dated the.....day of.....19.....

Duplicate issued, to expire on the.....day of..... 19.....

Licence or Registration Clerk.

Station.

Dated the.....day of .....19....."

No. 1739Pl.—7th April 1937.—In exercise of the powers conferred by section 11 of the Indian Motor Vehicles Act, 1914 (VIII of 1914), the Governor is pleased to make the following amendment in the Bengal Motor Vehicles Rules, 1935, published under notification No. 436Pl., dated the 31st January 1935, as amended from time to time:—

Amendment.

Add at the end of sub-rule (*v*) of rule 204 in part V of the said rules the following:—

(10) P. W. D. Lebong-Manjitar (Rangit) Road, from Lebong as far as the Darjeeling Improvement Fund bungalow at Badamtam.

(11) P. W. D. Road from Simana to Mirik.

No. 1746Pl.—7th April 1937.—The following draft of an amendment, which in exercise of the powers conferred by section 11 of the Indian Motor Vehicles Act, 1914 (VIII of 1914), the Governor proposes to make in the Bengal Motor Vehicles Rules, 1935, published under notification No. 436Pl., dated the 31st January 1935, as amended from time to time, is published for the information of persons likely to be affected thereby.

The draft will be taken into consideration on or after the 7th May 1937, and any objection or suggestion received by the undersigned with regard thereto before that day will be duly considered:—

Draft amendment.

Add at the end of sub-rule (*v*) of rule 204 in part V of the said rules the following:—

(12) Municipal Lebong Circular Road up to Badamtam.

G. P. HOGG,

Secy. to the Govt. of Bengal.

JUDICIAL DEPARTMENT.

No. 4242A.

Powers.

Midnapore.—No. 4009A.—5th April 1937. In exercise of the powers conferred by sub-section (*1*) of section 164 of the Code of Criminal Procedure, 1898 (Act V of 1898), the Governor is pleased to empower Babu Dinesh Chandra Sen Gupta, a Sub-Deputy Magistrate, also a Magistrate of the second class at Ghatal, in the district of Midnapore, to record any statement or confession made to him in the course of an investigation under Chapter XIV of the said Code or at any time afterwards before the commencement of enquiry or trial.

Dacca.—No. 4114A.—6th April 1937.—Babu Mahima Ranjan Mitra, officiating Subordinate Judge, Dacca, is vested with the powers of an Assistant Sessions Judge.

G. P. HOGG,

Secy. to the Govt. of Bengal.

JUDICIAL AND LEGISLATIVE DEPARTMENTS.

Judicial.

NOTIFICATIONS.

Mymensingh.—No. 3082J.—5th April 1937.—In exercise of the powers conferred by sections 14 and 15 and the proviso to section 357 of the Code of Criminal Procedure, 1898 (Act V of 1898), the Governor is pleased—

(*a*) to confer upon Maulvi Abdul Alim Muhammad the powers of a Magistrate of the 3rd class, in the district of Mymensingh, for a period of three years from the date of this notification,

(*b*) to direct him to sit as a member of the Kishoreganj bench in the said district, and

(*c*) to direct him to take down evidence in the English language.

Calcutta.—No. 3111J.—6th April 1937.—The services of Mr. Nural Azeem Khundkar, Barrister-at-Law, Deputy Superintendent and Remembrancer of Legal Affairs, Bengal, are placed temporarily at the disposal of the Governor-General of India.

Calcutta.—No. 3115J.—6th April 1937.—The services of Mr. C. O. Remfry, Barrister-at-Law, Chief Judge, Small Cause Court, Calcutta, are placed temporarily at the disposal of the Governor-General of India.

Howrah.—No. 3134J.—6th April 1937.—In exercise of the powers conferred by sections 14 and 15 and the proviso to section 357 of the Code of Criminal Procedure, 1898 (Act V of 1898), the Governor is pleased—

(*a*) to confer upon Babu Pravash Chandra Bagchi the powers of a Magistrate of the third class, in the district of Howrah, for a period of three years from the 12th January 1937,

(*b*) to direct him to sit as a member of the Bally bench in the said district, and

(*c*) to direct him to take down evidence in the English language.

Malda.—No. 3178J.—6th April 1937.—In exercise of the powers conferred by sections 14 and 15 and the proviso to section 357 of the Code of Criminal Procedure, 1898 (Act V of 1898), the Governor is pleased—

(*a*) to confer upon Babu Rajani Kanta Das the powers of a Magistrate of the third class, in the district of Malda, for a period of three years from the 7th April 1937, in respect to such cases as may be made over to him within the limits of the Sadar subdivision of the said district,

(*b*) to direct that he shall, in addition to sitting singly, sit as a member of the Old Malda bench in the said district, and

(*c*) to direct him to take down evidence in the English language.

Malda.—No. 3172J.—7th April 1937.—In exercise of the powers conferred by sections 14 and 15 and the proviso to section 357 of the Code of Criminal Procedure, 1898 (Act V of 1898), the Governor is pleased—

(*a*) to confer upon Babu Ashutosh Chaudhuri the powers of a Magistrate of the third class, in the district of Malda, for a period of three years from the 8th May 1937, in respect to such cases as may be made over to him within the limits of the Sadar subdivision of the said district,

(*b*) to direct that he shall, in addition to sitting singly, sit as a member of the Sadar bench in the said district, and

(*c*) to direct him to take down evidence in the English language.

Noakhali.—No. 3190J.—8th April 1937.—In exercise of the powers conferred by sections 14 and 15 and the proviso to section 357 of the Code of Criminal Procedure, 1898 (Act V of 1898), the Governor is pleased—

(*a*) to confer upon Maulvi Abdul Bari the powers of a Magistrate of the second class, in the district of Noakhali, for a period of three years from the 30th April 1937, in respect to such cases as may be made over to him within the limits of the Feni subdivision of the said district,

(*b*) to direct that he shall, in addition to sitting singly, sit as a member of the Feni bench in the said district, and

(*c*) to direct him to take down evidence in the English language.

Calcutta.—No. 3199J.—8th April 1937.—Nawabzada A. S. M. Latif-ur-Rahman, Barrister-at-Law, Judge, Small Cause Court, Calcutta, is appointed to act as the Chief Judge of that Court, during the absence, on deputation, of Mr. C. O. Remfry to act as a Judge of the High Court, Calcutta, or until further orders.

Howrah.—No. 3211J.—9th April 1937.—In exercise of the powers conferred by sections 14 and 15 and the proviso to section 357 of the Code of Criminal Procedure, 1898 (Act V of 1898), the Governor is pleased—

(*a*) to confer upon Dr. Rakhal Chandra Datta the powers of a Magistrate of the third class, in the district of Howrah, for a period of three years from the 9th February 1937,

(*b*) to direct him to sit as a member of the Sadar bench in the said district, and

(*c*) to direct him to take down evidence in the English language.

Howrah.—No. 3213J.—9th April 1937.—In exercise of the powers conferred by sections 14 and 15 and the proviso to section 357 of the Code of Criminal Procedure, 1898 (Act V of 1898), the Governor is pleased—

(*a*) to confer upon Babu Akshoy Kumar Sarkar the powers of a Magistrate of the third class, in the district of Howrah, for a period of three years from the 19th February 1937,

(*b*) to direct him to sit as a member of the Sadar bench in the said district, and

(*c*) to direct him to take down evidence in the English language.

Bogra.—No. 3215J.—9th April 1937.—In exercise of the powers conferred by sections 14 and 15 and the proviso to section 357 of the Code of Criminal Procedure 1898 (Act V of 1898), the Governor is pleased—

(*a*) to confer upon Dr. Habibar Rahman the powers of a Magistrate of the third class, in the district of Bogra, for a period of three years from the date of this notification,

(*b*) to direct him to sit as a member of the Sadar bench in the said district, and

(*c*) to direct him to take down evidence in the English language.

Howrah.—No. 3136J.—6th April 1937.—In exercise of the power conferred by section 65 of the Bengal Village Self-Government Act, 1919 (Bengal Act V of 1919), the Governor is

pleased to appoint the following members of the Domjur union board within the Domjur police-station in the Sadar subdivision of the Howrah district, to be, during their term of office as such members, a union bench within the jurisdiction of the said union board for the purposes of that section:—

Babu Satkari Mukharji.

Babu Satya Chandra Mukharji.

Babu Priya Nath Hati.

Babu Surendra Nath Karmakar.

Howrah.—No. 3137J.—6th April 1937.—In exercise of the power conferred by section 73 of the Bengal Village Self-Government Act, 1919 (Bengal Act V of 1919), the Governor is pleased to appoint the following members of the Domjur union board within the Domjur police-station in the Sadar subdivision of the Howrah district, to be, during their term of office as such members, a union court within the jurisdiction of the said union board for the purposes of that section:—

Babu Satkari Mukharji.

Babu Upendra Nath Banarji.

Babu Satya Chandra Mukharji.

Munshi Dabir Ali Shaik.

Mymensingh. — No. 3174J. — 7th April 1937.—In exercise of the power conferred by section 65 of the Bengal Village Self-Government Act, 1919 (Bengal Act V of 1919), the Governor is pleased to appoint the following members of the union boards mentioned below, to be, during their term of office as such members, union benches within the jurisdiction of the said union board of which they are, respectively, members for the purposes of that section:—

Mymensingh district.

Sadar subdivision.

Haluaghat police-station.

Shakuai union board.

Babu Upendra Chandra Bhattacharji.

Babu Surya Kumar Bhattacharji.

Babu Abinash Chandra Bhattacharji.

Dr. Nibaran Chandra Sarkar.

Md. Shamiruddin Khan.

Phulpur police-station.

Rahimganj union board.

Md. Rostum Ali Ahammad Chaudhuri.

Md. Khoda Bux Sarkar.

Md. Nacharaddin Sarkar.

Md. Ichahak Ali Sarkar.

Babu Jitendra Chandra Acharya.

Mymensingh.—No. 3175J.—7th April 1937.—In exercise of the power conferred by section 73 of the Bengal Village Self-Government Act, 1919 (Bengal Act V of 1919), the Governor is pleased to appoint the following members of the union boards mentioned below, to be, during their term of office as such members, union courts within the jurisdiction of the said union board of which they are, respectively, members for the purposes of that section:—

Mymensingh district.

Sadar subdivision.

Haluaghat police-station.

Shakuai union board.

Babu Upendra Chandra Bhattacharji.

Babu Surya Kumar Bhattacharji.

Babu Abinash Chandra Bhattacharji.

Dr. Nibaran Chandra Sarkar.

Md. Shamiruddin Khan.

Phulpur police-station.

Rahimganj union board.

Md. Rostum Ali Ahammad Chaudhuri.

Md. Khoda Bux Sarkar.

Md. Nacharaddin Sarkar.

Md. Ichahak Ali Sarkar.

Babu Jitendra Chandra Acharya.

N. G. A. EDGLEY

Secy. to the Govt. of Bengal.

Legislative.

NOTIFICATION.

No. 1444L. — 7th April, 1937. — Mr. Khagendra Nath Majumdar, First Assistant Secretary to the Government of Bengal, Legislative Department, was allowed leave on average pay for ten days, under rule 81(*b*) (*ii*) of the Fundamental Rules, with effect from the 16th March, 1937.

G. G. HOOPER,
Secy. to the Govt. of Bengal.

LOCAL SELF-GOVERNMENT DEPARTMENT.

NOTIFICATIONS.

Minister-in-charge: The Hon'ble Sir Bijoy Prasad Singh Roy, Kt.

Nadia. — No. 1699L.S.-G. — 30th March 1937.—Whereas the following members of the local boards in the district of Nadia have failed to make the oath or affirmation of allegiance in accordance with the provisions of section 16B of the Bengal Local Self-Government Act of 1885 (Bengal Act III of 1885);

And whereas the Government of Bengal (Ministry of Local Self-Government) are satisfied that the failure of such persons to comply with the provisions of the said section was due to circumstances beyond their control;

Now, therefore, in exercise of the power conferred by sub-section (*3*) of section 16B of the said Act as amended by the Bengal Local Self-Government (Second Amendment) Act, 1936 (Bengal Act XV of 1936), the Government of Bengal (Ministry of Local Self-Government) are pleased to declare that the failure of all such persons to comply with the provisions of the said section is hereby condoned:—

Ranaghat local board.

Babu Pravash Chandra Bhattacharjee.

Babu Bibhuti Bhusan Chakraverty.

Munshi Iman Ali Biswas.

Serajul Islam Munshi.

Babu Durga Pada Gangopadhya.

Muhammad Karim Baksh Mondal.

Babu Kunja Bihari Roy.

Babu Panchanan Biswas.

Munshi Lal Muhammad Mondal.

Kushtia local board.

Babu Surendra Nath Sarkar.

Munshi Belayet Hossain.

Maulvi Ahmed Ali Mian.

Babu Jagat Chandra Pal.

Babu Nibaran Chandra Mukherjee.

Maulvi Syed Oliulla Arabi.

Maulvi M. Golam Rahman.

Babu Haripada Adhikari.

Babu Atul Krishna Saha.

Maulvi Mosharaf Hussain Choudhury.

Meherpur local board.

Babu Rati Kanta Biswas.

Munshi Abdul Jalil Mia.

Maulvi Syed Zeaul Huq.

Babu Hemanta Kumar Roy.

Babu Jogesh Kumar Bhattacharja.

Maulvi Md. Abdul Hannan.

M. Abdul Aziz.

Babu Phanindranath Roy.

Sadar local board.

Babu Tara Prosad Sen.

Munshi Meher Ali Mondal.

Babu Sibendra Nath Sinha Roy.

Munshi Hekmat Ali Mondal.

Babu Ranajit Pal Choudhury.

Babu Nanda Lal Bhattacharjee.

Maulvi Mahammad Abdul Halim Molla.

Babu Jitendra Nath Haldar.

Munshi Ekim Biswas.

Chaudanga local board.

Babu Mrityunjoy Acharyya.

Maulvi Aftab Hossain Joardar.

Babu Tarapada Biswas.

Maulvi Mohamed Abul Hossain.

Babu Mahi Mohan Sarkar.

Maulvi Pir Mohammad Biswas.

Babu Shibapada Mukherjee.

Maulvi Afzal Hossain.

Babu Harihar Biswas.

Murshidabad. — No. 1700L.S.-G. — 30th March 1937.—Whereas the following members of the local boards in the district of Murshidabad have failed to make the oath or affirmation of allegiance in accordance with the provisions of section 16B of the Bengal Local Self-Government Act of 1885 (Bengal Act III of 1885);

And whereas the Government of Bengal (Ministry of Local Self-Government) are satisfied that the failure of such persons to comply with the provisions of the said section was due to circumstances beyond their control;

Now, therefore, in exercise of the power conferred by sub-section (3) of section 16B of the said Act as amended by the Bengal Local Self-Government (Second Amendment) Act, 1936 (Bengal Act XV of 1936), the Government of Bengal (Ministry of Local Self-Government) are pleased to declare that the failure of all such persons to comply with the provisions of the said section is hereby condoned:—

Sadar local board.

Babu Bhola Nath Bandopadhyay.

Maulvi Khosbar Hossain Biswas.

Babu Nripendra Narayan Basu Sarbadhicary.

Babu Radha Bollov Kundu.

Maulvi Abdul Bari, M.A., B.L.

Babu Sisir Kumar Mukhopadhyay.

Maulvi Gholam Panjatan Ahmed *alias* Md. Gholam Panjatan.

Babu Jnanendra Nath Lahiri,

Babu Anil Kumar Chatterjee.

Babu Radhapada Pramanic.

Maulvi Md. Abul Kasem.

Maulvi Nakibaddin Mondal.

Jangipur local board.

Babu Kamalakshya Banerjee.

Maulvi Sheikh Tamijuddin Mandal.

Maulvi Muhammad Yad Hossain.

Babu Kirit Bhushan Das.

Maulvi Eunus Muhammad Biswas.

Babu Mahesh Narayan Das.

Rai Jnanendra Narayan Chaudhury Bahadur.

Babu Probhat Kumar Choudhury.

Babu Dhirendra Nath Roy.

Maulvi Muhammad Bogdad Biswas.

Kandi local board.

Babu Kartick Chandra Roy Chaudhury.

Maulvi Mohammad Abul Kasem.

Babu Sarat Chandra Trivedi.

Haji Shaikh Rahamatullah.

Maulvi Kazi Abul Barkat.

Babu Sarat Chandra Mukherjee.

Maulvi Ziauddin Ahmed.

Babu Ganga Narayan Roy.

Babu Satish Chandra Adhikary.

Maulvi Khondkar Mohammad Abu Ahsan.

Lalbagh local board.

Babu Prabar Krishna Majumdar.

Maulvi Ayenuddin Ahmed.

Maulvi Hafizar Rahman Kazi.

Munshi Rahamatulla Sarkar.

Babu Ashutosh Majumdar.

Shaik Pulin Mandal.

Babu Nirendra Narain Roy.

Maulvi Md. Fazle Rubbee.

Babu Bidhu Bhusan Bagchi.

Babu Sailendra Kumar Dutta.

Khulna. — No. 1701L.S.-G. — 30th March 1937.—Whereas Babu Bhabani Sankar Guin, a member of the Bagerhat local board in the district of Khulna, has failed to make the oath or affirmation of allegiance in accordance with the provisions of section 16B of the Bengal Local Self-Government Act of 1885 (Bengal Act III of 1885);

And whereas the Government of Bengal (Ministry of Local Self-Government) are satisfied that the failure of Babu Bhabani Sankar Guin to comply with the provisions of the said section was due to circumstances beyond his control;

Now, therefore, in exercise of the power conferred by sub-section (*3*) of section 16B of the said Act as amended by the Bengal Local Self-Government (Second Amendment) Act, 1936 (Bengal Act XV of 1936), the Government of Bengal (Ministry of Local Self-Government) are pleased to declare that the failure of Babu Bhabani Sankar Guin to comply with provisions of the said section is hereby condoned.

Jessore. — No. 1702L.S.-G.—30th March 1937.—Whereas Munshi Dudu Mian, a member of the Narail local board in the district of Jessore, has failed to make the oath or affirmation of allegiance in accordance with the provisions of section 16B of the Bengal Local Self-Government Act of 1885 (Bengal Act III of 1885);

And whereas the Government of Bengal (Ministry of Local Self-Government) are satisfied that the failure of Munshi Dudu Mian to comply with the provisions of the said section was due to circumstances beyond his control;

Now, therefore, in exercise of the power conferred by sub-section (*3*) of section 16B of the said Act as amended by the Bengal Local Self-Government (Second Amendment) Act, 1936 (Bengal Act XV of 1936), the Government of Bengal (Ministry of Local Self-Government) are pleased to declare that the failure of Munshi Dudu Mian to comply with the provisions of the said section is hereby condoned.

Burdwan.—No. 1803M.—31st March 1937.—The following draft of by-laws, which has been framed by the Commissioners of the Raniganj Municipality, in the district of Burdwan, under section 269 (*a*) of the Bengal Municipal Act, 1932 (Bengal Act XV of 1932), and which the Government of Bengal (Ministry of Local Self-Government) propose to confirm under section 506 of the Act, is published for the information of persons likely to be affected thereby.

2. The draft will be taken into consideration on the 2nd July 1937, and any objection or suggestion received by the undersigned

through the District Magistrate and the Divisional Commissioner before that date will be duly considered:—

Draft by-laws.

By-laws regulating the disposal of sewage, offensive matter, the carcasses of animals and rubbish, under section 269 (a) of the Bengal Municipal Act, 1932.

PENALTIES.

1. *Fines.*—The penalty for the infringement of any of these by-laws shall be—

(a) a fine not exceeding the sum stated at the foot of the by-law.

(b) in the case of a second or subsequent conviction for a similar offence a fine not exceeding the sum (if any) stated in that behalf at the foot of the by-law.

DISPOSAL OF SEWAGE AND OFFENSIVE MATTER.

2. *Depositing night-soil.*—No person shall deposit night-soil in any place not approved by the Commissioners for the purpose.

Fine, Rs. 10; on a second or subsequent conviction, Rs. 50.

3. *Manure.*—No owner or occupier of any garden or agricultural land shall, without the general or special permission of the Commissioners, cause or allow any human excrement to be used for manuring in such garden or land.

Fine, Rs. 50.

4. *Access to municipal servants.*—Every owner or occupier of any house, land or premises, from which sewage or offensive matter is not removed by such owner or occupier, shall give free access to the servants of the municipality for the removal thereof within such hours as may have been fixed by the Commissioners.

Fine, Rs. 10; on a second or subsequent conviction, Rs. 50.

5. *Removal of offensive matter from markets.*—Every owner, occupier, or farmer of any market shall remove or cause to be removed therefrom, once in every twenty-four hours, any offensive matter, which may have accumulated therein during that period.

Fine, Rs. 10; on a second or subsequent conviction, Rs. 50.

DISPOSAL OF CARCASSES.

6. *Disposal of carcasses.*—Every owner or occupier within whose premises any animal dies shall, within six hours after its death, or if the death occurs at night, then within six hours after sunrise, either remove the carcass, at his own expense, to such place as may be set apart by the Commissioners for the disposal of such carcasses, or report the death to the conservancy overseer of the ward within which such premises are situated.

Fine, Rs. 50.

Burdwan.—No. 1812M.—31st March 1937.—In exercise of the power conferred by section 506 of the Bengal Municipal Act, 1932 (Bengal Act XV of 1932), the Government of Bengal (Ministry of Local Self-Government) are pleased to confirm the by-laws framed by the Commissioners of the Asansol Municipality in the district of Burdwan under section 245 (a) and (b) of the said Act and published for information under notification No. 7501M., dated the 24th September 1936.

Medical.

NOTIFICATIONS.

Minister-in-charge: The Hon'ble Sir Bijoy Prasad Singh Roy, Kt.

No. 1367Medl.—31st March 1937.—In exercise of the powers conferred by section 459A of the Bengal Municipal Act, 1932 (Bengal Act XV of 1932), and clause (k) of section 138 of the Bengal Local Self-Government Act of 1885 (Bengal Act III of 1885), the Government of Bengal (Ministry of Local Self-Government) are pleased to make the following amendments in the rules for the establishment and management of hospitals and dispensaries under the supervision of the Government of Bengal, published under notification No. 138T.Medl., dated the 7th June 1915, as subsequently amended, viz.:—

Amendments.

In rule 28 of the said rules, under the heading "(a) Class III-A—Dispensaries," in clause (3)—

(1) for the words "by cheques drawn by the Secretary or the Chairman" *substitute* the words and figures "by cheques drawn in the case of claims exceeding Rs. 250, by the Chairman and the Secretary and in other cases, by the Chairman or the Secretary";

(2) after the words and figures "and Rs. 25 in the case of other dispensaries" *insert* the following:—

"All cheque books shall be kept in the custody of the Secretary."

No. 1374Medl.—31st March 1937.—In exercise of the power conferred by section 459A of the Bengal Municipal Act, 1932 (Bengal Act XV of 1932), and clause (*k*) of section 138 of the Bengal Local Self-Government Act of 1885 (Bengal Act III of 1885), the Government of Bengal (Ministry of Local Self-Government) are pleased to make the following amendment in the rules for the establishment and management of hospitals and dispensaries under the supervision of the Government of Bengal published under notification No. 138T.Medl., dated the 7th June 1915, as subsequently amended, viz.:—

Amendment.

After the second sentence in rule 37 *add* the following:—

"Half holidays may be allowed to the staff on Sundays or on any other day in the week at the discretion of the Managing Committee or Manager, provided that arrangement is made for emergent cases and the Medical Officer and the compounder do not leave the station."

No. 1381Medl.—31st March 1937.—In exercise of the power conferred by section 459A of the Bengal Municipal Act, 1932 (Bengal Act XV of 1932), and clause (*k*) of section 138 of the Bengal Local Self-Government Act of 1885 (Bengal Act III of 1885), the Government of Bengal (Ministry of Local Self-Government) are pleased to make the following amendment in the rules for the establishment and management of hospitals and dispensaries under the supervision of the Government of Bengal published under notification No. 138T.Medl., dated the 7th June 1915, as subsequently amended, viz.:—

Amendment.

For rule 22(3) *substitute* the following:—

"A manager or a member of a Committee appointed under rule 20, clause (*c*), may at any time be removed from office by the Commissioner of the Division, at the request of the proprietors or supporters *or any of them*, or by the Commissioner of his own motion—

(*a*) if he refuses to act or becomes incapable of acting, or is declared insolvent, or if after his appointment as manager or member he is convicted of an offence which in the opinion of the Commissioner of the Division involves moral turpitude; or

(*b*) if he absents himself from six consetive meetings of the Committee without having obtained permission from the Committee at a meeting; or

(*c*) if he knowingly acquires or continues to have, directly or indirectly, by himself or his partner, any share or interest in any contract or employment with, by or on behalf of the members of the Committee or holds any office of profit under them.

Note.—Notwithstanding anything contained in clause (*c*) above, no person shall be deemed to be disqualified thereunder by reason only—

(*i*) of his having a share or interest in a contract entered into between the members of the Committee and any incorporated or registered company of which such person is a member or shareholder;

(*ii*) of his being professionally engaged on behalf of the members of the Committee as a legal practitioner and receiving a fee for services rendered in his professional capacity:

Provided that no such person shall act as a member of the Committee or take part in any proceedings relating to any matter in which he has a share or interest as described in clause (*i*) above."

No. 1388Medl.—31st March 1937.—It is hereby notified for general information that the Government of Bengal (Ministry of Local Self-Government) are pleased to make the following amendments in rules 18 and 20 of the rules for the mangement of Government Medical Schools in Bengal, published under notification No. 1716Medl., dated the 30th June 1921, as subsequently amended, viz.:—

I. *Rule 18.—Delete* the words "until commencement of the next summer session" and *add* "If a student whose name has been so removed, seeks readmission during the same session he may be readmitted on payment of—

(*a*) all arrear dues;

(*b*) a readmission fee of Rs. 6; and

(*c*) tuition fees for the intervening period.

If, however, such a student seeks readmission at any other session, he may be readmitted on payment of—

(*a*) all arrear dues;

(*b*) a readmission fee of Rs. 6; and

(*c*) tuition fees due for the intervening period from the commencement of that session.

In no case shall such a student be eligible for a scholarship or free-studentship after readmission until he has passed the next school text examination."

II. *Rule 20.—Substitute* the following for this rule:—

A student (1) who has been rusticated or (2) who has left the school without permission of the Superintendent may be readmitted on payment of—

(*a*) all arrears of fees, if any, when he left the school; and

(*b*) a readmission fee of Rs. 25:

provided that the conduct and attendance of the deserter while in the school have been good.

In no case shall such a student be eligible for a scholarship or free-studentship after readmission until he has passed the next school test examination.

ERRATUM.

Minister-in-charge: The Hon'ble Sir Bijoy Prasad Singh Roy, Kt.

No. 547Medl.—27th February 1937.—In Government resolution No. 315Medl., dated the 2nd February 1937, regarding the establishment of a General Council and State Faculty of Ayurvedic Medicine, Bengal, published at pages 243-249 of Part I of the *Calcutta Gazette*, dated the 11th February 1937, make the following corrections:—

1. In paragraph 5 of the resolution, *for* "Rs. 7,500" *substitute* "Rs. 7,750".

2. *For* clause (*k*) of statute 2 appended to the said resolution *substitute* the following, viz.:—

"(*k*) One representative each of the Bengal Sanskrit Association, Calcutta, and the East Bengal Saraswat Samaj, Dacca."

G. S. DUTT,
Secy. to the Govt. of Bengal.

DEPARTMENT OF PUBLIC HEALTH AND LOCAL SELF-GOVERNMENT.

NOTIFICATIONS.

Murshidabad.—No. 1876M.—6th April 1937.—In exercise of the power conferred by section 424 of the Bengal Municipal Act, 1932 (Bengal Act XV of 1932), the Governor is pleased to cancel the following notifications extending the provision of section 424 of the said Act to the municipalities noted against each:—

Notification No. 4328M., dated the 18th July 1935—Berhampore Municipality.

Notification No. 4329M., dated the 18th July 1935—Murshidabad Municipality.

Notification No. 4330M., dated the 18th July 1935—Jiaganj-Azimganj Municipality.

Notification No. 4331M., dated the 18th July 1935—Kandi Municipality.

Notification No. 4332M., dated the 18th July 1935—Jangipur Municipality.

Notification No. 4333M., dated the 18th July 1935—Dhulian Municipality.

Calcutta.—No. 1470Medl.—7th April 1937.—Lt.-Col. P. Bannerji, I.M.S., officiating Superintendent, Campbell Medical School and Hospital, Calcutta, is granted leave for seven months and twenty-five days, viz., leave on average pay for the initial period of three months, with effect from the 28th February 1937, or any subsequent date, under rule 81(*b*) (*i*) of the Fundamental Rules, and thereafter leave on average pay for four months and twenty-five days, under the proviso to Fundamental Rule 81(*b*) (*ii*), subject to the condition that the leave under the proviso to Fundamental Rule 81(*b*) (*ii*) is spent elsewhere than in India, Ceylon or Nepal.

2. This department notifications Nos. 455Medl. and 456Medl., dated the 18th February 1937, are hereby cancelled.

Calcutta-Chittagong.—No. 1354P.H.—6th April 1937.—It is hereby notified for general information that Karachi has been declared free from plague and that the regulations for the prevention of the introduction of plague by sea, which were imposed in the ports of Calcutta and Chittagong against vessels arriving from Karachi, are hereby withdrawn.

24-Parganas.—No. 1401P.H.—7th April 1937.—In exercise of the power conferred by section 506 of the Bengal Municipal Act, 1932 (Bengal Act XV of 1932), the Governor of Bengal is pleased to confirm the by-laws framed by the Commissioners of the Garulia municipality in the district of 24-Parganas under section 392 of the said Act and published for information under notification No. 4487P.H., dated the 19th November 1936.

Malda.—No. 1403P.H.—8th April 1937.—Whereas the Governor of Bengal is satisfied that an outbreak of small-pox in an epidemic form still prevails in the district of Malda:

Now, therefore, in exercise of the power conferred by section 2A, read with sub-section (*1*) of section 2 of the Epidemic Diseases Act, 1897 (Act III of 1897), the Governor of Bengal is pleased to extend the application to the said district of the temporary regulations prescribed in notifications No. 3970P.H., dated the 12th October 1936, and No. 1147P.H., dated the 25th March 1937, for a further period of three months with effect from the 11th April 1937.

CORRIGENDUM.

Nadia.—No. 1905L.S.-G.—9th April 1937.—In Government notification No. 1668-L.S.-G., dated the 25th March 1937, publishing the names of elected and appointed members of the Nadia district board in the *Calcutta Gazette Extraordinary*, dated the 31st March 1937, make the following correction:—

Against the members elected by Sadar local board *read* "Babu Ranajit Pal Chowdhury" *for* "Babu Hem Chandra Roy Chowdhury".

G. S. DUTT,

Secy. to the Govt. of Bengal.

EDUCATION DEPARTMENT.

NOTIFICATIONS.

Calcutta.—No. 1658Edn.—6th April 1937.—In exercise of the power conferred by section 6, sub-section (*3*) of the Indian Universities Act, 1904 (VIII of 1904), as amended by the Calcutta University Act, 1921 (VII of 1921), His Excellency the Chancellor of the Calcutta University is pleased to approve of the following elections of Ordinary Fellows by the Registered Graduates of the University:—

Satis Chandra Ghosh, Esq., M.A.

Sasikanta Chakrabarti, Esq., B.E. (Cal.), M.I.P. (London), M.I.E. (Ind.).

Dacca.—No. 1684Edn.—7th April 1937.—Khan Sahib Maulvi Abdur Rub Chowdhury, Professor of English, Islamic Intermediate College, Dacca, is allowed leave, with effect from the 1st September 1937 or any subsequent date on which he avails himself of it up to the date prior to that of the commencement of the summer vacation of the College for 1939, viz., leave on average pay for such period as together with the summer vacation of 1939 does not exceed eight months, under the proviso to Fundamental Rule 81 (*b*) (*ii*), subject to the condition that the leave is spent elsewhere than in India, Ceylon or Nepal, and leave on half average pay for the remaining period, under rule 81 (*d*) of the same Rules.

Hooghly.—No. 1697Edn.—9th April 1937.—Mr. Kuruvila Zachariah, Principal, Hooghly Mohsin College, is allowed leave *ex*-India on half average pay for the period intervening between the summer and Puja vacations of the College extending from the 23rd April to 1st July 1937, and 3rd October to the 4th November 1937, respectively, under rule 81 (*d*) of the Fundamental Rules, in combination with the said vacations, under rule 82 (*d*) of those Rules.

No. 1701Edn.—9th April 1937.—Babu Priya Nath Hore, District Inspector of Schools, is allower leave on average pay, on medical certificates, for two months, under the proviso to rule 81 (*b*) (*ii*) of the Fundamental Rules, in extension of the leave already granted to him.

Registration.

NOTIFICATIONS.

Faridpur-Midnapore.—No. 301Regr 7th April 1937.—Babu Bijoy Chandra Dhar, officiating District Sub-Registrar of Faridpur, is appointed to act as District Sub-Registrar of Midnapore, with effect from the 8th April 1937 or any subsequent date on which he joins the appointment, during the absence, on leave, of Babu Sital Chandra Banarji, or until further orders.

Rangpur.—No. 307Regn.—9th April 1937.—In exercise of the power conferred by section 3 of the Bengal Muhammadan Marriages and Divorces Registration Act, 1876 (Bengal Act I of 1876), Government are pleased to appoint Maulvi Muhammad Abdur Rahman temporarily to be a Muhammadan Registrar within the police-stations of Jaldhaka and Kishoreganj, in the district of Rangpur, during the absence, on leave, of Maulvi Bashiruddin Ahmed, or until further orders.

Rangpur.—No. 308Regn.—9th April 1937.—In exercise of the power conferred by section 2 of the Kazis Act, 1880 (Act XII of 1880), Government are pleased to appoint Maulvi Muhammad Abdur Rahman temporarily to be the Kazi for the celebration of marriages and the performance of other rites and ceremonies within the police-stations of Jaldhaka and Kishoreganj, in the district of Rangpur, during the absence, on leave, of Maulvi Bashiruddin Ahmed, or until further orders.

Bogra-Dinajpur.—No. 313Regn.—9th April 1937.—Babu Narendra Nath Sarkar, Joint Sub-Registrar of Bogra, is appointed to act as District Sub-Registrar of Dinajpur, with effect from the 16th April 1937 or any subsequent date on which he joins the appointment, during the absence, on leave, of Babu Satyendranath Mitra, or until further orders.

Bakarganj.—No. 316Regn.—9th April 1937.—Maulvi Mir Muhammad Ismail, Sadar Joint Sub-Registrar of Bakarganj, is appointed to act as District Sub-Registrar of that place, with effect from the 10th April 1937, during the absence, on leave, of Maulvi Irfanuddin Ahmad, or until further orders.

T. M. Dow,

Secy. to the Govt. of Bengal.

Orders by the Director of Public Instruction, Bengal.

Bengal Educational Service.

Malda. — No. 16B.—31st March 1937.—Maulvi Gholam Rabbani Ahmed, District Inspector of Schools, Malda, in the Bengal Educational Service, is declared to have been on privilege leave on full pay for the period from the 7th to 11th December 1936, under Article 260 of the Civil Service Regulations.

Calcutta.—No. 17B.—5th April 1937.—Dr. Mahendra Nath Sircar, Professor, Presidency College, Calcutta, in the Bengal Educational Service, is declared to have been on leave on average pay, on medical certificate, for the period from 8th February 1937 to 20th March 1937, under the proviso to Fundamental Rule 81 (*b*) (*ii*).

J. M. BOTTOMLEY,

Director of Public Instruction, Bengal.

Orders by the Inspector-General of Registration, Bengal.

Bakarganj. — No. 169.—2nd April 1937.—Maulvi A. K. M. Fakaruddin Ahmed, Sub-Registrar of Barhanuddin Havilder's Hat, in the district of Bakarganj, is allowed leave on average pay for twenty-three days, under rule 81 (*b*) (*ii*) of the Fundamental Rules, in extension of the leave granted to him in this department notification No. 130, dated the 13th March 1937.

Dacca. — No. 170.—3rd April 1937.—This department notification No. 141, dated the 20th March 1937, granting leave on average pay for the 25th March 1937 to Maulvi Md. Jalaluddin, Sub-Registrar attached to Dacca, is hereby cancelled.

24-Parganas.—No. 171.—3rd April 1937.—Maulvi Saiyid Mostafa Ali, Sub-Registrar of Basirhat, in the district of the 24-Parganas, is allowed leave on average pay for one month, under rule 81 (*b*) (*ii*) of the Fundamental Rules, in extension of the leave granted to him in this department notification No. 94, dated the 27th February 1937.

24-Parganas.—No. 172.—5th April 1937.—Babu Jatindra Mohan Nath, Sub-Registrar of Naihati, in the district of the 24-Parganas, is allowed leave on average pay for thirteen days, under rule 81 (*b*) (*ii*) of the Fundamental Rules, with effect from the 17th March 1937.

24-Parganas.—No. 173.—5th April 1937.—Babu Sukumar Chakrabatti, Sub-Registrar attached to the Sadar Registration office at Alipore, in the district of the 24-Parganas, is appointed to act as Sub-Registrar of Naihati in the same district, from the 17th March 1937, during the absence, on leave, of Babu Jatindra Mohan Nath, Sub-Registrar.

Chittagong.—No. 174.—6th April 1937.—Babu Nirendra Nath Kanungo, 2nd Joint Sub-Registrar of Satkaniya at Adhunagar, in the district of Chittagong, was on leave on average pay for three days, under rule 81 (*b*) (*ii*) of the Fundamental Rules, with effect from the 10th March 1937.

Bakarganj.—No. 175.—7th April 1937.—This department notification No. 118, dated the 8th March 1937, granting leave on average pay for four days to Maulvi A. N. M. Yusuff Ali, Sub-Registrar of Nalchiti, in the district of Bakarganj, with effect from the 22nd March 1937, is cancelled.

Murshidabad.—No. 176.—7th April 1937.—This department notifications Nos. 87 and 88, dated the 24th February 1937, granting respectively leave for one month to Maulvi Saiyid Zarghamuddin Hydar Hasany, Sub-Registrar of Jangipur, in the district of Murshidabad, and appointing Maulvi Khondkar Md. Ziaul Ashan to act as Sub-Registrar during his absence on leave are hereby cancelled.

Rajshahi-Jalpaiguri.—No. 177.—7th April 1937.—Babu Manindra Kumar Maitra, Sub-Registrar attached to the Sadar Registration office at Rajshahi, is posted temporarily to the headquarters station of the district of Jalpaiguri.

24-Parganas.—No. 178.—7th April 1937.—Babu Sudhir Kumar Biswas, Sub-Registrar attached to the Sadar Registration office at Alipore, 24-Parganas, officiating as Sub-Registrar of Mathurapur in the same district, is allowed leave on average pay for two months, under rule 81 (*b*) (*ii*) of the Fundamental Rules, with effect from the 1st April 1937.

24-Parganas.—No. 179.—7th April 1937.—Babu Jatindra Mohan Nath, officiating Sub-Registrar of Naihati, in the district of the 24-Parganas, is appointed to act as Sub-Registrar of Mathurapur in the same district, during the absence, on leave, of the permanent incumbent, or until further orders.

Bakarganj.—No. 180.—7th April 1937.—Maulvi Monjeali Sardar, Sub-Registrar of Galachipa, in the district of Bakarganj, is appointed to be Sub-Registrar of Barhanuddin Havildar's Hat in the same district.

Bakarganj.—No. 181.—7th April 1937.—Maulvi Md. Velayet Ali Khan, Joint Sub-Registrar of Barhanuddin Havildar's Hat at Tazimuddin, in the district of Bakarganj, on leave, is appointed to be Sub-Registrar of Galachipa in the same district.

Bakarganj.—No. 182.—7th April 1937.—Babu Asita Ranjan Choudhuri, 1st Joint Sub-Registrar of Amtali at Barguna, in the district of Bakarganj, is allowed leave on average pay for four months, under rule 81 (*b*) (*ii*) of the Fundamental Rules, with effect from the date on which he may be relieved.

24-Parganas.—No. 183.—7th April 1937.—Maulvi Khondkar Md. Ziaul Ashan, Sub-Registrar attached to the Sadar Registration office at Berhampur, in the district of Murshidabad, officiating as Sub-Registrar of Basirhat, in the district of the 24-Parganas, is allowed leave on average pay for ten days, under rule 81 (*b*) (*ii*) of the Fundamental Rules, with effect from the date on which he may be relieved.

24-Parganas.—No. 184.—7th April 1937.—Babu Sukumar Chakrabatti, Sub-Registrar attached to the Sadar Registration office at Alipore, in the district of the 24-Parganas, is appointed to act as Sub-Registrar of Basirhat in the same district, during the absence, on leave, of the permanent incumbent, or until further orders.

S. CHATTERJEA,
Inspector-General of Regn., Bengal.

FINANCE DEPARTMENT.

Audit.

ADDENDA AND CORRIGENDA.

No. 3828F.—10th April 1937.—The following corrections, which have been authorised, are published for general information:—

Bengal Financial Rules, 1st Edition (Reprint), 1930.

Page 15.—Rule 13 (d).—Insert the following as Note 5 to the rule:—

"Customs Department is authorised to issue cheques in favour of the post office for sums less than Rs. 10 for remittance by money order of refunds arising out of re-assessment of customs duty on postal parcels."

Page 28.—Rule 53A.—Cancel Note 1 as inserted by correction slip No. 324, dated 17th June 1936, under this rule.

Page 184.—F. R. Appendix 4.—Rule III. *Substitute* the following for sub-rule 3 as inserted by correction slip No. 270, dated the 6th September 1935:—

"The supply of residential accommodation by one department to the employees of another shall not for the purposes of these rules be held to constitute a service rendered. In all such cases, the rent charged for residential accommodation will be the rent recoverable under the rules for the time being in force from the persons actually using such accommodation."

No. 3829F.—10th April 1937.—The following corrections, which have been authorised, are published for general information:—

Fundamental and Subsidiary Rules, 1st Edition (Reprint), 1929.

Page 179—F. R. 107.—Insert the following as the Government of India's decision under clause (*c*) of this rule, namely:—

Government of India's decision: The words "in his post" mean "in his post in the remote locality" even in the case of a Government servant on straight transfer.

(This will apply also to the services and posts under the rule-making control of the Local Government.)

Page 271—Appendix No. 8.—Add the following to the list in Part I of this Appendix:—

35—Industries.

"38(a) Superintendent, Cinchona Cultivation in Bengal—Sibpur (Howrah) and Sarail (Darjeeling).

Note.—When moving from one headquarters to the other, the Superintendent and the staff accompanying him will be entitled to travelling allowance as on tour."

D. GLADDING,
Secy. to the Govt. of Bengal.

DEPARTMENT OF COMMERCE AND LABOUR.

NOTIFICATIONS.

No. 3870Com.—6th April 1937.—In exercise of the power conferred by the second proviso to sub-section (*1*) of section 30 of the Indian Electricity Act, 1910 (IX of 1910), the Governor is pleased to exempt the Government peripatetic cinema parties from the application of the said section.

No. 4148Com. — 10th April 1937. — In pursuance of sub-section (*2*) of section 36A of the Indian Electricity Act, 1910 (IX of 1910), the Governor is pleased to nominate the Deputy Secretary to the Government of Bengal, Department of Commerce and Labour, to be a member of the Central Electricity Board.

No. 4150Com. — 10th April 1937. — In pursuance of sub-section (*2*) of section 27A of the Indian Boilers Act, 1923 (V of 1923), the Governor is pleased to nominate the Deputy Secretary to the Government of Bengal, Department of Commerce and Labour, to be a member of the Central Boilers Board.

ORDER.

No. 4110Com. — 10th April 1937. — In exercise of the power conferred by sub-section (*1*) of section 4 of the Cotton Industry (Statistics) Act, 1926 (XX of 1926), the Governor is pleased to authorise the Sadar Subdivisional Officer, Khulna, to exercise the powers specified in that sub-section (otherwise than in the proviso) in respect of the Acharya Prafulla Chandra Mills, Limited, Khulna, and all other such mills that may hereafter be erected within his jurisdiction.

A. HUGHES,

Dy. Secy. to the Govt. of Bengal.

REVENUE DEPARTMENT.

Land Revenue.

NOTIFICATIONS.

Murshidabad.—No. 4828L.R.—5th April 1937.—In exercise of the powers conferred by sub-section (*3*) of section 158A of the Bengal Tenancy Act, 1885 (VIII of 1885), the Governor is pleased to appoint the Certificate Officer, Berhampore, *ex-officio*, to perform the functions of a Certificate Officer, under the Public Demands Recovery Act, 1913 (Bengal Act III of 1913), for the purpose of the said section in respect of the recovery of arrears of rent (including cesses) due to the following estates in the district of Murshidabad:—

(*i*) Estate of Babu Amarendu Narayan Roy of Jemo, and

(*ii*) Estate of Babu Bibhuti Bhusan Sinha, Pleader and Receiver to the properties in suit No. 149 of 1933 of the Subordinate Judge's Court, Murshidabad.

Murshidabad.—No. 8422L.R.—5th April 1937.—In exercise of the powers conferred by sub-section (*3*) of section 158A of the Bengal Tenancy Act, 1885 (VIII of 1885), the Governor is pleased to appoint the Certificate Officer, Berhampore, *ex-officio*, to perform the functions of a Certificate Officer, under the Bengal Public Demands Recovery Act, 1913 (Bengal Act III of 1913), for the purpose of the said section in respect of recovery of arrears of rent (including cesses) due to the estate of Babu Ajoyendu Narayan Roy, Bijoyendu Narayan Roy and Srimati Jyotiprava Devi, certified guardian mother of minors Sailendra Narayan Roy and Shuvendu Narayan Roy, in the district of Murshidabad.

Murshidabad.—No. 8425L.R.—5th April 1937.—In exercise of the powers conferred by sub-section (*3*) of section 158A of the Bengal Tenancy Act, 1885 (VIII of 1885), the Governor is pleased to appoint the Certificate Officer, Berhampore, *ex-officio*, to perform the functions of a Certificate Officer, under the Bengal Public Demands Recovery Act, 1913 (Bengal Act III of 1913), for the purpose of the said section in respect of recovery of arrears of rent (including cesses), due to the estate of Babu Bhutesh Chandra Trivedi, Trustee to the estate of Babu Sachhidananda Ghosh Roy, in the district of Murshidabad.

Dinajpur-Bogra.—No. 8653L.R.—7th April 1937.—Mr. S. B. Hatch-Barnwell, I.C.S., Joint Magistrate and Deputy Collector, employed as Assistant Settlement Officer in the district of Dinajpur, is, in the interest of public service, also appointed to be an Assistant Settlement Officer in the district of Bogra, with effect from the date on which he joins his settlement duties in that district.

Bogra.—No. 8654L.R.—7th April 1937.—Under the provisions of section 3 (*14*) of the Bengal Tenancy Act, 1885 (VIII of 1885) Mr. S. B. Hatch-Barnwell, I.C.S., Joint Magistrate and Deputy Collector, is authorised to discharge, in the district of Bogra, the functions of a Revenue Officer, under Chapter X of that Act, so far as they relate to surveys and the preparation of record-of-rights.

He is also vested with the powers of an Assistant Settlement Officer, under Chapter VII, Part I of the rules under the Bengal Tenancy Act, in respect of the aforesaid area.

J. B. KINDERSLEY,

Secy. to the Govt. of Bengal (offg.).

EXCISE DEPARTMENT.

Excise.

Orders by the Commissioner of Excise and Salt, Bengal.

No. 101Exc. — 5th April 1937. — Maulvi Rahamuddin Biswas, Inspector of Excise and Salt, was allowed leave on average pay for twenty-nine days, with effect from 7th December 1936, under rule 81 (*b*) (*ii*) of the Fundamental Rules.

D. MACPHERSON,

Commr. of Excise and Salt, Bengal (offg.).

TREASURY NOTICES.

Bankura, the 5th April 1937.

Babu Rebati Raman Datta, Deputy Magistrate and Deputy Collector, has been placed in executive charge of the Bankura Treasury from the forenoon of the 5th April 1937 and is authorised to draw bills on other treasuries.

J. M. CHATARJI, *Collector.*

Orders by the Deputy Accountant-General, Bengal.

The Treasury Buildings, the 9th April 1937.

It is notified that the refund order Book No. 7198 containing 50 orders White is in use by the Income-Tax Office, Military Circle, Meerut, with effect from the 31st March 1937.

C. BHASKARAIYA,
Dy. Accountant-General, Bengal.

SHERIFF'S OFFICE.

The 11th March 1937.

Notice is hereby given that the Second Criminal Sessions of the year 1937 of the High Court of Judicature at Fort William in Bengal for the town of Calcutta and Factory of Fort William and the places subordinate thereto, will be held at the Court House, in the town of Calcutta, on Monday, the 3rd day of May 1937, at 11 o'clock in the forenoon, and thenceforward from day to day until the said sessions be over. And it is hereby proclaimed that all persons who are to prosecute any of the prisoners to be brought up for trial at the said sessions be present then and there to prosecute.

S. C. LAW, *Sheriff.*

সরিফ আফিস, সন ১৯৩৭ সালের ১১ই মার্চ্চ।

সকলকে সমাচার দেওয়া যাইতেছে যে, সুবে বাঙ্গালার ফোর্ট উইলিয়ম দুর্গের অধীনে সহর কলিকাতার ও অন্যান্য স্থানের ফৌজদারী বিচার নিষ্পত্তি জন্য আগামী সন ১৯৩৭ সালের ৩রা মে সোমবার বেলা ১১ ঘটিকার সময় এবং যে পর্য্যন্ত সেশিয়ানের কার্য্য সমাধা না হয়, প্রতিদিন উক্ত সময়ে কলিকাতার হাইকোর্টের আপন আদালত ঘরে সন ১৯৩৭ সালের দ্বিতীয় ক্রিমিন্যাল সেশিয়ান বসিবেক, এবং এতদ্বারা প্রচার করা যাইতেছে যে, যে সকল ব্যক্তি কোন কয়েদীর বিরুদ্ধে কোন ফৌজদারী মিছিল করিবেক, তাহারা উক্ত স্থানে উক্ত সময়ে হাজির থাকিয়া মোকদ্দমা করে। ইতি।

এস্, সি, লাহা,
সরিফ।

ORDERS BY THE HIGH COURT OF JUDICATURE AT FORT WILLIAM IN BENGAL.

Appointments and Transfers.

Rangpur.—No. 4006A.—5th April 1937.—Babu Wooshacur Basu Majumdar, probationary munsif, employed as additional munsif (on training) at Gaibandha, in the district of Rangpur, is appointed temporarily to be additional munsif of Gaibandha in the said district.

Burdwan.—No. 4081A.—7th April 1937.—Babu Amiya Nimai Chakrabatti, probationary munsif, Burdwan, is appointed to be a munsif in the said district, to be ordinarily stationed at the Sadar station, *vice* Babu Aditya Chandra Datta.

Burdwan-Pabna-Bogra. — No. 4084A.—7th April 1937. — Babu Aditya Chandra Datta, munsif of Burdwan (Sadar), is appointed to be a munsif in the district of Pabna and Bogra, to be ordinarily stationed at Serajganj, *vice* Mr. Mazheruddin Ahmed, on leave.

Dacca. — No. 4108A. — 7th April 1937. — Babu Amulya Kumar Guha, officiating Subordinate Judge, Dacca, is appointed to act, until further orders, as Subordinate Judge and Small Cause Court Judge of the same district, *vice* Babu Ramesh Chandra Sen.

Pabna-Bogra. — No. 4123A. — 7th April 1937.—Maulvi Md. Abdus Samad, additional munsif of Serajganj, in the district of Pabna and Bogra, is appointed to be a munsif in the said district, to be ordinarily stationed at Pabna.

Jessore-Dacca. — No. 4127A. — 7th April 1937.—Babu Manindra Nath Bhanja, munsif of Narail, in the district of Jessore, is appointed to act, until further orders, as Subordinate Judge of Dacca, *vice* Babu Amulya Kumar Guha.

24-Parganas.—No. 4133A.—7th April 1937.—Babu Sailendra Prasad Ghosh, probationary munsif, Alipore, is appointed to be a munsif in the said district, to be ordinarily stationed at Baruipur, *vice* Maulvi Enayetur Rahman.

24-Parganas-Jessore. — No. 4137A. — 7th April 1937. — Maulvi Enayetur Rahman, munsif of Baruipur, in the district of 24-Parganas, is appointed to be a munsif in the district of Jessore, to be ordinarily stationed at Narail, *vice* Babu Manindra Nath Bhanja.

Midnapore-Faridpur. — No. 4142A. — 7th April 1937. — Babu Nishakar Chaudhuri, munsif of Midnapore (Sadar), is appointed to be a munsif in the district of Faridpur, to be ordinarily stationed at Bhanga, *vice* Babu Charu Chandra Ganguli, granted leave.

Midnapore.—No. 4171A.—8th April 1937.—Babu Samarendra Narayan Bagchi, probationary munsif, Midnapore, is appointed to be a munsif in the said district, to be ordinarily stationed at the Sadar station, *vice* Babu Nishakar Chaudhuri.

Dacca. — No. 4217A.—8th April 1937.—Maulvi Syed Mokarram Hossain Chaudhuri, probationary munsif, Dacca, is appointed to be a munsif in the said district, to be ordinarily stationed at the Sadar station, *vice* Babu Nripendra Nath Bagchi.

Tippera - Mymensingh.—No. 4220A.—8th April 1937.—Babu Binay Bhusan Sen, munsif of Brahmanbaria, in the district of Tippera, is appointed to act as Subordinate Judge of Mymensingh during the absence, on leave, of Babu Basanta Kumar Ray, or until further orders.

Dacca-Rajshahi-Malda. — No. 4225A.—8th April 1937.—Babu Nripendra Nath Bagchi, munsif of Dacca (Sadar), is appointed to be a munsif in the district of Rajshahi, to be ordinarily stationed at Naogaon, *vice* Babu Jitendra Prosad Sen.

Rajshahi - Malda - Tippera.—No. 4230A.—8th April 1937.—Babu Jitendra Prasad Sen, munsif of Naogaon, in the district of Rajshahi, is appointed to be a munsif in the district of Tippera, to be ordinarily stationed at Brahmanbaria, *vice* Babu Binay Bhusan Sen.

Powers.

Jessore.—No. 4112A. — 7th April 1937. — Maulvi Enayetur Rahman, munsif, under orders of transfer to Narail, in the district of Jessore, is vested under section 19, sub-section (2) of the Bengal, Agra and Assam Civil Courts Act, 1887 (XII of 1887), as amended by the Decentralization Act, 1914 (IV of 1914), with powers to try, under the ordinary procedure, original suits up to the value of Rs. 2,000 arising within the local limits of the Narail Munsifi.

Jessore.—No. 4120A. — 7th April 1937. — Maulvi Enayetur Rahman, munsif, under orders of transfer to Narail, in the district of Jessore, is vested with the powers of a Judge of a Court of Small Causes for the trial of suits cognizable by such a Court up to the value of Rs. 300 within the local limits of the Narail munsifi.

Pabna. — No. 4166A.—8th April 1937.—Maulvi Md. Abdus Samad, munsif, under orders of transfer to Pabna, is vested with the powers of a Judge of a Court of Small Causes for the trial of suits cognizable by such a Court up to the value of Rs. 50 within the local limits of the Pabna munsifi.

Faridpur.—No. 4195A.—8th April 1937.—Babu Nishakar Chaudhuri, munsif, under orders of transfer to Bhanga, in the district of Faridpur, is vested with the powers of a Judge of a Court of Small Causes for the trial of suits cognizable by such a Court up to the value of Rs. 100 within the local limits of the Bhanga munsifi.

Rajshahi - Malda.—No. 4198A.—8th April 1937.—Babu Nripendra Nath Bagchi, munsif, under orders of transfer to Naogaon, in the district of Rajshahi, is vested with the powers of a Judge of a Court of Small Causes for the trial of suits cognizable by such a Court up to the value of Rs. 300 within the local limits of the Naogaon munsifi.

Tippera.—No. 4201A.—8th April 1937.—Babu Jitendra Prasad Sen, munsif, under orders of transfer to Brahmanbaria, in the district of Tippera, is vested under section 19, sub-section (2) of the Bengal, Agra and Assam Civil Courts Act, 1887 (XII of 1887), as amended by the Decentralization Act, 1914 (IV of 1914), with powers to try, under the ordinary procedure, original suits up to the value of Rs. 2,000 arising within the local limits of the Brahmanbaria munsifi.

Rajshahi - Malda.—No. 4204A.—8th April 1937.—Babu Nripendra Nath Bagchi, munsif, under orders of transfer to Naogaon, in the district of Rajshahi, is vested under section 19, sub-section (2) of the Bengal, Agra and Assam Civil Courts Act, 1887 (XII of 1887), as amended by the Decentralization Act, 1914 (IV of 1914), with powers to try, under the ordinary procedure, original suits up to the value of Rs. 2,000 arising within the local limits of the Naogaon munsifi.

Tippera. — No. 4207A.—8th April 1937.—Babu Jitendra Prasad Sen, munsif, under orders of transfer to Brahmanbaria, in the district of Tippera, is vested with the powers of a Judge of a Court of Small Causes for the trial of suits cognizable by such a Court up to the value of Rs. 300 within the local limits of the Brahmanbaria munsifi.

N. L. HINDLEY,

Registrar, Appellate Side (offg.).

COURT OF SMALL CAUSES OF CALCUTTA.

The following list of holidays, to be observed in the year 1937 as holidays in the Court of Small Causes, Calcutta, as sanctioned by the Local Government, is published in accordance with the provisions of section 92 of Act XV of 1882 (Presidency Small Cause Courts Act) :—

Names of holidays.	English date.	Bengali date.	Days of the week.	Number of days.
	1937.	1343.		
New Year's Day	1st January ..	17th Pous ..	Friday	1
Holiday for Council Elections ..	18th to 20th January	5th to 7th Magh ..	Monday to Wednesday	3
Maghotsav (1)	23rd, 24th and 25th January.	10th, 11th and 12th Magh.	Saturday, Sunday and Monday.	3
Sri Panchami ..	15th and 16th February	3rd and 4th Falgoon	Monday and Tuesday ..	2
Id-uz-Zuha	22nd and 23rd February.	10th and 11th Falgoon	Monday and Tuesday ..	2
Sivaratri (2)	12th March ..	28th Falgoon ..	Friday	1
Muharram ..	24th March ..	10th Chaitra ..	Wednesday ..	1
Dol-Jatra	26th March ..	12th Chaitra ..	Friday	1
Good Friday	26th March ..	12th Chaitra ..	Friday	1
Easter Saturday	27th March ..	13th Chaitra ..	Saturday	1
Easter Monday	29th March ..	15th Chaitra ..	Monday	1
Baruni Gangasnan (2) ..	8th April ..	25th Chaitra ..	Thursday	1
Chaitra Sankranti ..	13th April ..	30th Chaitra ..	Tuesday	1
		1344.		
Bengali New Year's Day (2) ..	14th April ..	1st Baisakh ..	Wednesday ..	1
Fatiha Duwazdaham ..	23rd May ..	9th Jaistha ..	Sunday	1
Ditto (2) ..	24th May ..	10th Jaistha ..	Monday	1
Dasahara Gangasnan ..	18th June ..	4th Ashar ..	Friday	1
King Emperor's Birthday ..	(To be fixed hereafter by Government).			
Half-yearly closing of Banks' Accounts.	1st July ..	17th Ashar ..	Thursday	1
Rath-Jatra (2)	10th July ..	26th Ashar ..	Saturday	1
Janmastami	29th August ..	13th Bhadra ..	Sunday	1
Dassera vacation including Mahalaya, Durga, Lakshmi and Kali Pujas and Bhratridwitya.	4th October to 5th November.	18th Aswin to 19th Kartik.	Monday to Friday ..	33
Shab-i-Barat (2) ..	21st October ..	4th Kartik	Thursday	1
Jagadhatri Puja	12th and 13th November.	26th and 27th Kartik	Friday and Saturday ..	2
Id-ul-Fitr	4th and 5th December	18th and 19th Agrahayan.	Saturday and Sunday ..	2
X'mas holidays	24th to 31st December.	9th to 16th Pous ..	Friday to Friday ..	8

NOTE.—Muhammadan officials and employees of this Court are allowed to absent themselves from office on the following days in addition to those mentioned above :—

Muharram—

(1) For Sunni Muhammadans .. .. 1 day.

(2) For Shia Muhammadans .. .. 2 days

Akhiri Chahar Shamba .. .. .. 1 day.

If any of the Muhammadan holidays notified above does not fall on the day notified, the Muhammadan officials and employees of the Court of Small Causes, Calcutta, may be granted a sectional holiday on the day on which the holiday is actually observed in addition to a holiday on the day notified.

(1) All officials, suitors and witnesses who profess the Brahmo faith may be granted, when possible, three days' holidays on account of Maghotsav, viz., on the 23rd, 24th and 25th January 1937.

(2) Local holidays, besides these, also the Solar Eclipse day and the day following a Lunar Eclipse during the year shall also be observed as local holidays.

The 22nd March 1937. K. L. CHATTERJEE, *Registrar.*

ORDERS BY COMMISSIONERS OF DIVISIONS.

Burdwan Division—Chinsura.

No. 855L. S.-G.—6th April 1937.—It is hereby notified for general information that, in exercise of the powers conferred by rule 19 of the Election Rules under the Local Self-Government Act, the undersigned determines that the number of members to be elected from the Special Constituency and each existing thana of the General Constituency of the Sadar local board in the district of Midnapore will be as shown below against each—

I.—Special Constituency.

Name of local board.	Thana.		Number of seats reserved for the minority community.
Sadar local board, Midnapore	1. Garbeta 2 Salboni 3. Keshpur 4. Midnapore 5. Debra	Sadar North	1
	1. Kharagpur Town. 2. Kharagpur Rural. 3. Narayangarh 4. Keshiari 5. Pingla 6. Sabong 7. Danton 8. Mohanpur	Sadar South	1

II.—General Constituency.

Name of local board.	Thana.	Number of seats to which members are to be elected
Sadar local board, Midnapore	Midnapore	2
	Kharagpur	1
	Salboni	1
	Keshpur	1
	Debra	1
	Sabong	2
	Narayangarh	2
	Pingla	1
	Keshiari	1
	Garbeta	3
	Danton	2
	Mohanpur	1

No. 856L. S.-G.—6th April 1937.—It is hereby notified for general information that, in exercise of the powers conferred by rule 19 of the Election Rules under the Local Self-Government Act, the undersigned determines that the number of members to be elected from the Special Constituency and each existing thana of the General Constituency of the Contai local board in the district of Midnapore will be as shown below against each—

I.—Special Constituency.

Name of local board.	Thana.	Number of seats reserved for the minority community.
Contai local board, Midnapore	Contai Khejri Ramnagar Bhagabanpur Egra Pataspur	1

II.—General Constituency.

Name of local board.	Thana.	Number of seats to which members are to be elected.
Contai local board, Midnapore	Contai	3
	Khejri	3
	Ramnagar	2
	Bhagabanpur	3
	Egra	3
	Pataspur	3

No 857L. S.-G.—6th April 1937.—It is hereby notified for general information that, in exercise of the powers conferred by rule 19 of the Election Rules under the Local Self-Government Act, the undersigned determines that the number of members to be elected from the Special Constituency and each existing thana of the General Constituency of the Tamluk local board in the district of Midnapore will be as shown below against each—

I.—Special Constituency.

Name of local board.	Thana	Number of seats reserved for the minority community.
Tamluk local board, Midnapore	Tamluk Moyna Sutahata Panskura Nandigram Mahisadal	2

II.—General Constituency

Name of local board.	Thana	Number of seats to which members are to be elected.
Tamluk local board, Midnapore	Tamluk	3
	Moyna	1
	Sutahata	2
	Panskura	3
	Nandigram	2
	Mahisadal	3

No. 858L.S.-G.—6th April 1937.—It is hereby notified for general information that, in exercise of the powers conferred by rule 19 of the Election Rules under the Local Self-Government Act, the undersigned determines that the number of members to be elected from the Special Constituency and each existing thana of the General Constituency of the Ghatal local board in the district of Midnapore will be as shown below against each—

I.—Special Constituency.

Name of local board.	Thana.	Number of seats reserved for the minority community.
Ghatal local board, Midnapore	Ghatal Daspur Chandrakona	1

II.—General Constituency

Name of local board.	Thana	Number of seats to which members are to be elected.
Ghatal local board, Midnapore	Ghatal	5
	Daspur	5
	Chandrakona	3

No. 859L.S.-G.—6th April 1937.—It is hereby notified for general information that, in exercise of the powers conferred by rule 19 of the Election Rules under the Local Self-Government Act, the undersigned determines that the number of members to be elected from each existing thana of the General Constituency of the Jhargram local board in the district of Midnapore will be as shown below against each—

General Constituency.

Name of local board.	Thana.	Number of seats to which members are to be elected.
Jhargram local board, Midnapore	Jhargram Jamboni	4
	Nayagram	1
	Gopiballavpur	3
	Binpore	2

No. 1168J.G.—5th April 1937.—In accordance with the provisions of rule 63 (2) of Chapter IV of the Bengal Jail Code, Volume I, I hereby re-appoint Rai Satyansu Kumar Sinha Bahadur to be a non-official visitor of the Sadar Jail in the district of Burdwan for a period of two years with effect from the 27th May 1937.

No 1188J.G.—5th April 1937.—Babu Upendra Nath Das Gupta, Sub-Deputy Collector and Circle Officer of Raipur, Bankura, on leave, is posted to the headquarters station of the Burdwan district for employment on general duty. The posting is made in the public interest.

No. 456M.—7th April 1937.—In exercise of the power conferred by section 50 of the Bengal Municipal Act of 1932 (Bengal Act XV of 1932), it is hereby notified for general information that at the general election of the Commissioners of the Bhadreswar Municipality in the district of Hooghly held on the 21st March 1937 the following gentlemen have been duly elected as Commissioners of that municipality:—

Ward I (Bhadreswar).

Babu Prosad Chandra Neogy.

Ward II (North Samnagar).

Babu Jotindra Nath Banerjee.
Shaikh Abdul (minority community).

Ward III (Telinipara).

Babu Satya Saran Bannerjee.

Ward IV (Victoria).

Babu Nilmoni Ganguli.
Babu Chattoo Lal Chowdhury.
Shaikh Akbar Ali (minority community).

Ward V (Mankundu).

Babu Panna Lal Khan.

No. 460M.—8th April 1937.—In exercise of the power conferred by section 50 of the Bengal Municipal Act of 1932 (Bengal Act XV of 1932), it is hereby notified for general information that at the general election of the Commissioners of the Champdany Municipality in the district of Hooghly held on the 21st March 1937, the following gentlemen have been duly elected as Commissioners of that municipality:—

I—Reserved seats for minority community

Ward II.

Maulvi Abdul Ohed.

Wards III and IV combined.

Maulvi Mir Panjali.

II—General seats.

Ward I.

Babu Rajendra Nath Neogi.

Ward II.

Dr. Nitya Prosanna Biswas.
Babu Hirendra Nath Mukhopadhya.

Ward III.

Babu Pulin Bandhab Mukhopadhya
Babu Kedar Nath Singh.

Ward IV.

Babu Kamala Charan Mukhopadhya.

No. 876L.S.-G.—9th April 1937.—It is hereby notified for general information that, under rule 20(*b*) read with rule 23 of the rules for the management of charitable hospitals and dispensaries in Bengal, Babu Ishan Chandra Singha has been appointed to be a member of the committee for the management of the charitable dispensary at Bhagwanpur in the district of Midnapore, *vice* Babu Abinash Chandra Singh, resigned.

No. 879L.S.-G.—9th April 1937.—It is hereby notified for general information that, under rule 20(*b*) read with rule 23 of the rules for the management of charitable hospitals and dispensaries in Bengal, Babu Rajendra Nath Rana has been appointed to be a member of the committee for the management of the charitable dispensary at Kelomal in the district of Midnapore, *vice* Babu Sarada Charan Maity, removed.

No. 882L.S.-G.—9th April 1937.—It is hereby notified for general information that, under rule 20(*b*) read with rule 23 of the rules for the management of charitable hospitals and dispensaries in Bengal, the following gentlemen have been appointed to be members of the committee for the management of the charitable dispensary at Nischindipur in the district of Midnapore:—

(1) Babu Haraprosad Ghosh and (2) Babu Jogendra Nath Dey, *vice* (1) Babu Satish Chandra Misra and (2) Babu Haripada Ghosh, removed.

No. 885L.S.-G.—9th April 1937.—It is hereby notified for general information that, under rule 20(*b*) read with rule 23 of the rules for the management of charitable hospitals and dispensaries in Bengal, the following gentlemen have been appointed to be members of the committee for the management of the charitable dispensary at Protappur in the district of Midnapore:—

(1) Dr. Surendra Nath Adhikary, M.B., and (2) Syed Estahabad Ali, *vice* (1) Syed Ershad Ali, resigned, and (2) Munshi Shamshozoha, deceased.

No. 1262J.G.—9th April 1937.—In accordance with the provisions of rule 63(2) of Chapter IV of the Bengal Jail Code, Volume I, I hereby appoint Mrs. Charulata Das, wife of Mr. P. K. Das, Lecturer, Hooghly College, to be a non-official lady visitor of the Hooghly District Jail for a period of two years with effect from the date of this notification. The appointment of Mrs. Pryambada Nag in this office notification No. 131J.G of the 7th January 1936 for the remaining term of her office is hereby cancelled under rule 63A *ibid.*

A. J. DASH, *Commissioner.*

No. 1159E.—7th April 1937.—It is hereby notified that Mr. Kanai Lal Goswami, a candidate for election from the Hooghly-*cum*-Howrah Municipal General Constituency of the Bengal Legislative Assembly, has filed on the 8th March 1937, his return of election expenses and the declarations in respect thereof, as required under sub-rules (*1*) and (*2*) of rule 7 of the Bengal Legislative Assembly and the Bengal Legislative Council Electoral (Election Expenses and Election Petitions) Rules, 1936. These can be inspected in the office of the Commissioner of the Burdwan Division, Chinsura, during office hours on payment of a fee of one rupee.

2. Any person may, on payment of a fee of Rs. 2 for each copy, obtain attested copies of the return or declaration or of any part thereof.

O. M. MARTIN,
Commissioner and Returning Officer.

Bankura, the 5th April 1937.

It is hereby notified for general information that, under section 13 of the Bengal Village Self-Government Act, 1919 (Bengal Act V of 1919), read with rule 36 of the rules for election and appointment of members of union boards, Babu Sashadhar Goswami has been appointed as a member of Kuchiakole union board under section 6(*4*) of the Village Self-Government Act, in police-station Joypur in the Vishnupur subdivision of the district of Bankura, *vice* Babu Nalini Nath Goswami, deceased.

Bankura, the 8th April 1937.

It is hereby notified for general information that, under section 13 of the Bengal Village Self-Government Act, 1919 (Bengal Act V of 1919), read with rule 35 of the rules for the election and appointment of members of union boards, Babu Pramatha Bhandari has been elected as a member of the Karisunda union board in police-station Indas in the Vishnupur subdivision of the district of Bankura, *vice* Babu Manmatha Nath Bhandari, deceased.

It is hereby notified for general information that, under section 13 of the Bengal Villge Self-Government Act, 1919 (Bengal Act V of 1919), read with rule 35 of the rules for the election and appointment of members of union boards, Babu Gauri Sankar Ghose has been elected as a member of the Karisunda union board in police-station Indas in the Vishnupur subdivision of the district of Bankura, *vice* Babu Jatindra Nath Ghose, deceased.

J. M. CHATARJI, *District Magistrate.*

Vishnupur, the 3rd April 1937.

Under rule 9 of the Bengal Legislative Assembly and the Bengal Legislative Council Electoral (Election Expenses and Election Petitions) Rules, 1936, it is notified for general information that Babu Radhagobinda Roy, a candidate for the seat in the Bankura East Rural (General) Constituency of the Bengal Legislative Assembly, has filed in my office the return of election expenses and declaration, on the 2nd April 1937. This return is open to inspection in the office of the Subdivisional Officer, Vishnupur, district Bankura, on any working day between the hours of 6-30 a.m. and 11-30 a.m. on payment of a fee of rupee one. Attested copy of the return or any part thereof may be obtained on payment of a fee of Rs. 2 for each copy.

S. N. CHATTERJEE, *Returning Officer (Subdivisional Officer).*

Chinsura, the 5th April 1937.

No. 3177J.G.—It is hereby notified that Babu Kali Pada Ganguli, a nominated candidate for the election from the Hooghly South-West (Rural) General Constituency of the Bengal Legislative Assembly, has filed on 2nd April 1937 his return of election expenses and declarations in respect thereof, as required under sub-rules (*1*) and (*2*) of rule 7 of the Bengal Legislative Assembly and the Bengal Legislative Council Electoral (Election Expenses and Election Petitions) Rules, 1936. These can be inspected in the office of the District Magistrate, Hooghly, Chinsura, on payment of a fee of Re. 1 only between the hours of 11 a.m. and 4 p.m. on the days the office is open, for a week from the publication of this notice in the *Calcutta Gazette*, or from the 7th April 1937, whichever is later.

2. Any person may, on payment of a fee of Rs. 2 only for each copy, obtain attested copies of the returns or declarations or of any part thereof.

S. P. GHOSH, *Returning Officer.*

Midnapore, the 5th April 1937.

It is hereby notified that Babu Probodh Chandra Paramanik, an unsuccessful candidate for the election from the Midnapore Central General (Rural) Constituency of the Bengal Legislative Assembly, has filed on 5th April 1937 his return of election expenses and the declarations in respect thereof, as required under sub-rules (*1*) and (*2*) of rule 7 of the Bengal Legislative Assembly and the Bengal Legislative Council Electoral (Election Expenses and Election Petitions) Rules, 1936. These can be inspected in the office of the Subdivisional Magistrate, Midnapore, on payment of a fee of one rupee between the hours of 11 a.m. and 3 p.m. for a week from the publication of this notice in the *Calcutta Gazette*, or from the 15th April 1937, whichever is later.

2. Any person may, on payment of a fee of Rs. 2 for each copy, obtain attested copies of the return or declarations or of any part thereof.

D. GUPTA, *Returning Officer.*

Chittagong Division—Chittagong.

No. 2022G.—5th April 1937.—It is notified for general information that, under section 15 of the Bengal Ferries Act (Act I of 1885), the district board of Noakhali have, with my approval, adopted the following rules for the management of public ferries within the district in modification of the rules published with this office notification No. 4805G., dated the 25th September 1935:—

Rules framed under section 15 of the Bengal Ferries Act, I (B.C.) of 1885, as amended by district board resolution No. X-15, dated the 5th December 1936.

Rule 1. In these rules the term (*a*) "Magistrate" means the District Magistrate of Noakhali and any Magistrate subordinate to him and appointed by him in that behalf, and (*b*) "the district board" the district board of Noakhali and any local board in the district of Noakhali when legally vested with powers in respect of any public ferry by the district board of Noakhali.

Rule 2. Every public ferry in the district of Noakhali shall either be held khas or be leased out by public auction by the district board.

Rules for the management of public ferries held khas.

Rule 3. For every public ferry which is held khas the district board shall from time to time—

(*a*) provide such boats, landing-stages, rest houses and other appliances as the board shall think proper;

(*b*) appoint a suitable person to superintend the plying of the ferry, provide and pay boatmen, receive the authorised tolls and remit the same to the district fund;

(*c*) fix, with the approval of the Commissioner, the tolls to be levied from persons using the ferry;

(*d*) cause a schedule of such tolls legibly written in the vernacular to be fixed upon both landing-stages;

(*e*) determine the maximum number of passengers, animals, carts, vehicles and goods which each ferry boat shall carry and cause a notice to this effect to be affixed to each boat;

(*f*) determine the hours within which the boats shall ply and the minimum number of journey to be made every day;

(*g*) provide for the prompt conveyance of the mails at all times across the ferry.

Rule 4. Any person may compound for toll payable for the use of the ferry; and if the ferry should be closed before the expiry of the period for which such person has compounded for tolls payable for his use, he shall be entitled to a refund, the amount of which shall bear the same proportion to the whole sum paid by him as the period remaining bears to the whole period for which he compounded. Such refund shall be made under the orders of the district board.

Rules for the leasing out of the ferries.

Rule 5. The tolls of a public ferry shall be leased out by the Chairman or some other person authorised by the Chairman for a term not exceeding one year by public auction and by the district board for a term not exceeding three years.

Rule 6. When it has been determined to lease out the tolls of any public ferry by auction under section 9 of Act I (B.C.) of 1885, the Chairman, district board, shall determine where and when the auction shall be held and at least fifteen days before the auction, cause an advertisement of such auction to be published in vernacular, in such place and in such manner as to him shall seem expedient, provided that sales shall ordinarily be held in the district board or local board office.

Rule 7. The advertisement for settlement of ferries by auction specify the following which shall also be the conditions among others of the lease:—

(*a*) It is hereby notified for general information that the marginally noted ferries will be sold in public auction at..... on.....and the days following for the period from.....to the 31st March, 19 . Bidders are required to present themselves at the place at 11 a.m. on the sale day.

(*b*) Rates of tolls realisable shall be as follows:—

For the 1st class ferry as per list enclosed.

For the 2nd class ferry as per list enclosed.

For the 3rd class ferry as per list enclosed.

(*c*) The ferries shall be sold to the highest bidders subject to the condition that the officer presiding at the sale may, for sufficient reason to be recorded in writing, reject the bid of any person whom he considers unsuitable.

(*d*) The acceptance of bids received for ferries shall be subject to the approval of the Chairman, district board. If the Chairman on any ground reject the bid of any person he will get back his deposit money and will not be entitled to any compensation and interest, etc.

(*e*) (*i*) Each successful bidder shall be liable for the amount at which and the time for which his bid has been accepted.

(*ii*) Each successful bidder shall be required to deposit into the treasury on the day of sale (*a*) entire amount of the bid if the bid be Rs. 500 or less and (*b*) if the bid be more than Rs. 500, Rs. 500 plus 50 per cent. of the sum over Rs. 500 and the remainder within fifteen days, and the amount thus paid in advance will be adjusted against instalments as they fall due. If the bidder fails to deposit the money as aforesaid his bid will be liable to be cancelled and the ferry will be put up to resale. In cases of resale on account of default by the original lessee to pay the full amount of the bid money within the time allowed, the successful bidder at the resale shall pay the whole amount at the time when his bid is accepted. The deposit money, if any, of the original bidder will be forfeited.

(*iii*) Each successful bidder shall be bound to furnish such security as may be determined by the board from time to time for the due fulfilment of the conditions of lease on the day of sale or within such other time as the officer holding the same or the Chairman may direct. If he fails to furnish the security as aforesaid his lease shall be liable to be cancelled and the ferry to be put to resale.

(*iv*) Successful bidder shall have to execute and register a kabuliat embodying the terms of conditions of his lease within two days from the date of approval of the bid by the Chairman, district board, Noakhali.

(*v*) If any bidder fails to furnish the security as mentioned in clause III or execute kabuliat within the prescribed time, the board will be at liberty to resell the ferry and in that case he shall be liable for any deficit that may occur.

(*vi*) After the execution of kabuliat the lessee shall be given possession of the ferry and no bidder shall take possession of a ferry before execution of kabuliat or receiving *dhakhalnama*.

(*vii*) The lessee shall be bound to abide by the Bengal Ferries Act and the rules framed thereunder.

(*viii*) The lessees of the ferry shall provide the necessary number of boats in good condition, landing-stages, rest houses and lights at the termination of the crossing, etc., at their own cost as directed by the district board, and shall maintain the ferries in their fixed places and shall hang up the list of tolls in a conspicuous place at their own cost and must not levy tolls in excess of the rates from any person or from persons exempted from payments.

(*ix*) The lessee shall not ferry across in each trip more passengers, cattle, vehicles, etc., as prescribed by the board. He shall appoint proper persons to ferry across the passengers, etc., as soon as they arrive and make special arrangement for crossing of mails immediately on their arrival at the ghat and also abide by the rules and the laws.

(*x*) The following persons are exempted from payment of any toll:—

(A) Mails, mail carts, dak-runners and Government telegraph messengers on duty.

(B) Commissariat stores, animals and vehicles when accompanied by a chalan from the Commissariat.

(C) Persons or property mentioned in section 3* of the Indian Tolls (Army) Act, 1901.

---

*Section 3 of the Indian Tolls (Army) Act:—

"The following persons and properties, namely:—

(*a*) all officers and soldiers of—

(*i*) His Majesty's Regular Forces,

(*ii*) any local corps, or

(*iii*) Imperial Service Troops, when on duty or on march;

(*b*) all members of a corps or volunteers when on duty or when proceeding to or returning from duty,

(*c*) all officers and soldiers of Indian Reserve Forces when proceeding from their places of residence on being called out for training or service, or when proceeding back to their place of residence after such training or service,

(*d*) all grass-cutters when employed in the service of—

(*i*) His Majesty's Regular Forces,

(*ii*) any local corps,

(*iii*) Imperial Service Troops, or

(*iv*) any Corps or volunteers;

(*e*) all other authorised followers of—

(*i*) His Majesty's Regular Forces,

(*ii*) any local corps,

(*iii*) Imperial Service Troops, or

(*iv*) any Corps or volunteers;

When they accompany any body of such forces, troops or volunteers or any members of such corps on the march, or when they are otherwise moving under the orders of Military Authority;

(*f*) all members of the families of officers, soldiers or authorised followers of—

(*i*) His Majesty's Regular Forces, or

(*ii*) any local corps when accompanying any body of troops, or any officer, soldier or authorised follower thereof on duty or on the march;

(*g*) all prisoners under Military escort,

(*h*) the horses and baggage, and the persons (if any) employed in carrying the baggage of any persons exempted under any of the foregoing clauses when such horses, baggage, or persons accompany the persons so exempted under the circumstances mentioned in those clauses respectively,

(*i*) all carriages and horses belonging to His Majesty or employed in His Majesty's Military Service and all persons in charge of or accompanying the same, when conveying any such persons as hereinbefore in this section mentioned or when conveying baggages or stores or when returning unladen from conveying such persons, baggage or stores,

(*j*) all carriages and horses when moving under the orders of Military Authority for the purpose of being employed in His Majesty's Military Service,

(*k*) all animals accompanying any body of troops which are intended to be slaughtered for food or kept for any purpose connected with the provisioning of such troops, and

(b) all persons in charge of any carriage, horse or animal exempted under any of the foregoing clauses when accompanying the same under the circumstances mentioned in those clauses respectively, shall be exempted from payment of any tolls—

(i) on embarking or disembarking, or on being shipped or landed from or upon any landing place, or

(ii) in passing along or over any turnpike or other road bridge, or

(iii) on being carried by means of any ferry, otherwise demandable by virtue of any Act, Ordinance, Regulation, order or direction of any legislature or other public authority in British India:

"Provided that nothing in this section shall exempt any boats, barges or other vessels employed in conveying the said persons or property along any canal from payment of tolls in like manner as other boats, barges and vessels."

(D) Police and other public officers and persons and process-serving peons, presidents and village chowkidars when travelling on duty with their *bona fide* baggages, horses, palkies or other conveyances.

(E) Officers and employees of the district board when travelling on duty.

(F) Members of the district board and local boards travelling on duty connected with their office as such members.

(G) Coolies engaged on public works with their tools and instruments.

(H) Persons carrying dead bodies or property sent in by the police.

(I) Teachers and students of all educational institutions when required to attend the school or to go back to their residence after school hours.

(*xi*) Every lessee shall maintain a register in forms to be prescribed by the district board and available in the district board office on payment of price, on both sides of the ferry in which the number of trips made, passengers taken in each trip and the time of starting of the ferry boat and the name of the majhi in charge shall be noted and the entries shall be signed by at least three literate passengers with their full names and addresses

(*xii*) The above register shall be kept in the rest house provided by the lessees and is open to inspection by authorities.

(*xiii*) Boats of the Meghna ferries shall ply according to the timings to be fixed by the Chairman or the Vice-Chairman with reference to tides in different seasons and no boat shall be allowed to ply between 2 p.m. and 1 a.m. during the stormy season from June to September They shall load the boats with half of the prescribed number of passengers even during day time in stormy season.

(*xiv*) The lessees of ferries shall make special arrangement for additional boat during sowing, transplantation and reaping seasons.

(*xv*) (*a*) Every lessee of a ferry shall equip his boat with sufficient stock of oars, ropes, sails and 10 to 20 buckets and also repairing implements for stopping leakage.

(*b*) Every lessee of Meghna ferry shall equip his boat or boats with life buoys supplied from the district board on the 1st April or on any subsequent date on which he is given possession of the ferry and shall have to deposit in the district fund as soon as his bid is accepted, a sum equivalent to the price of the buoys supplied as security for taking proper care against loss, damage, rough use or for returning them in good condition as directed by the District Engineer when so required, failing which his lease will be cancelled and the ferry be put to resale. If a lessee fails to take proper care against loss, damage or rough use or to return them in good condition as directed by the District Engineer when so required, he shall be liable to a penalty of such amount as determined by the Chairman, district board, on the report of the District Engineer and the penalty be recovered from the security deposit as above.

(*xvi*) No lessee of a ferry shall appoint majhis who are not expert and whose ability has not been tested and certified by the District Engineer.

(*xvii*) Subject to rule (*xiii*), the ferry shall ordinarily ply between sunrise and sunset, but the lessee may employ the boats in ferrying passengers across at any time after sunset, provided each boat so employed carries a light which must be displayed in a conspicuous part of the boat.

(*xviii*) The ijaradars of all public ferries must mark load lines in their respective boats according to the direction of overseers and sub-overseers. If they fail to do so it will be done by the district board and the cost will be realised from the ijaradars concerned.

Rule 8. A copy of the advertisement and of the rules and the form of kabuliats required to be executed under section 9 of the Act shall be posted up in a conspicuous place in the district board.

Rule 9. If the lease of a ferry is cancelled on account of non-fulfilment of provisions of the foregoing rules by the lessee and if it is put to resale the lessee shall be liable to pay to the district fund any deficit between rent outstanding and the offer received and accepted at such resale.

Rule 10. The lessees of Meghna ferries shall maintain two balam boats, one for passengers and the other for cattle, goods and owners thereof, to be plied side by side each way.

J. D. V. HODGE, *Commissioner.*

Chittagong, the 3rd April 1937.

No. 3192.—It is hereby notified for general information that, under section 13 of the Bengal Village Self-Government Act (Act V of 1919), read with rule 36 of the rules for election and appointment of members of union boards, the following gentlemen have been

appointed to be members of the undermentioned union boards within the police-station noted above each in Sadar "B" subdivision of the Chittagong district:—

Patiya police-station.

Dhalghat union board No. X.

Maulvi Abdul Khaleque Chowdhury, B.A., *vice* Maulvi Sayadar Rahaman Sawdagor, removed.

Boalkhali police-station.

Karaldenga union board No. IX.

Babu Annada Charan Chowdhury, *vice* Babu Mohendra Lal Chowdhury, deceased.

No. 3213.—It is hereby notified for general information that, under section 13 of the Bengal Village Self-Government Act (Act V of 1919), read with rule 35 of the rules for election and appointment of members of union boards, Babu Prafulla Bikash Sen has been duly elected to be a member of Idgaon union board No. 1, police-station Cox's Bazar, in Cox's Bazar subdivision of the district of Chittagong, *vice* Babu Pratap Chandra Pal, resigned.

No. 3215.—It is hereby notified for general information that, under section 13 of the Bengal Village Self-Government Act (Act V of 1919), read with rule 35 of the rules for election and appointment of members of union boards, Maulvi Gholam Samdani Chowdhury has been duly elected to be a member of Dhoom union board No. IV, police-station Mirsarai, in Sadar "A" subdivision of the district of Chittagong, *vice* Maulvi Sultan Ahamed Chowdhury, removed.

[ILLEGIBLE], for *Addl. Dist. Magistrate.*

Tippera, the 6th April 1937.

No. 4045M.—It is hereby notified for general information that, under section (*13*) of the Bengal Village Self-Government Act, 1919 (Bengal Act V of 1919), read with section 6 (*3*) and rule 36 of the rules for the election and appointment of members of union boards, Munshi Abbas Ali Sarkar has been appointed as a member of the Naraindia union board No. VI of Daudkandi police-station in the district of Tippera, *vice* Maulvi Abdul Hamid removed under section 12 (*1*) (*d*) of the Act.

Comilla, the 7th April 1937.

No. 4118M.—It is hereby notified for general information that, under section 13 of the Bengal Village Self-Government Act, 1919, read with section 6 (*2*) and rule 35 of the rules for the election and appointment of members of union boards, Munshi Abdur Rashid has been elected as a member of the Araisidha union board No. XVI of Brahmanbaria police-station in the Brahmanbaria subdivision of the Tippera district, *vice* Munshi Shuruj Miah, removed.

J. P. RAY, *Addl. District Magistrate.*

Noakhali, the 6th April 1937.

No. 554C.—It is hereby notified for general information that, under sub-section (*2*) of section 6 of the Bengal Village Self-Government Act, 1919 (Act V of 1919), the following gentlemen have been duly elected to be members of the union board mentioned below in the Sadar subdivision of the Noakhali district:—

Sadar subdivision.

Ramgati police-station.

Char Algi union board No. IV.

Munshi Tafajjal Mia.
Munshi Majharal Hoq Mia.
Munshi Habiber Rahman Mia.
Munshi Abdur Rashid Howlader.
Babu Nishi Kanta Majumder.
Babu Nagendra Kumer Dutta.

No. 555C.—It is hereby notified for general information that, under sub-section (*3*) of section 6 of the Bengal Village Self-Government Act, 1919 (Act V of 1919), the following gentlemen have been appointed by the District Magistrate, Noakhali, to be members of the undermentioned union board in the Sadar subdivision of the Noakhali district:—

Sadar subdivision.

Ramgati police-station.

Char Algi union board No. IV.

Munshi Tasir Ahmed.
Munshi Anarul Haq.
Munshi Haji Sona Mia.

R. K. MITRA, *District Magistrate.*

Chittagong, the 6th April 1937.

It is hereby notified under rule 9 of the Bengal Legislative Assembly and the Bengal Legislative Council Electoral (Election Expenses and Election Petitions) Rules, 1936, that Maulvi Abul Basar Md. Shayesta Khan, a candidate for Chittagong North-West (Muhammadan) Rural Constituency of the Bengal Legislative Assembly, lodged his return of election expenses with the undersigned on the 4th April 1937.

The return and the declaration can be inspected in the office of the Sadar Subdivisional Officer on payment of a fee of Re. 1 between the hours of 11 a.m. and 5 p.m.

A. F. M. MOHSIN ALI, *Sadar Subdivisional Officer and Returning Officer.*

Dacca Division—Dacca.

No. 1742J.—3rd April 1937.—It is hereby notified for general information that, under rule 22 (*b*) of the manual of rules for the management of charitable hospitals and dispensaries in Bengal, published with Government notification No. 138T.Medl., dated the 7th June 1915, Babu Abala Kanta Roy Choudhury is appointed to be a member of the committee for the management of the charitable dispensary at Khalia in the district of Faridpur in place of Babu Kunja Behari Majumdar, removed.

No. 1789J.—5th April 1937.—In exercise of the powers delegated to me by notification No. 7908M. of the 3rd November 1936, published at pages 2540-41, Part I of the *Calcutta Gazette*, dated 5th November 1936, I do hereby direct under section 95(*2*) of the Bengal Municipal Act, 1932, that the following roads, portions of which lie within the Mymensingh Municipality but maintained by the district board shall be excluded from the operation of the Bengal Municipal Act, 1932 (Bengal Act XV of 1932):—

Descriptions of roads.

(1) Mymensingh Municipal Boundary Road—Leading from 2nd mile Mymensingh Subornakhali Road by the side of the Jail to 2nd mile Mymensingh Toke Road. Length—3 miles 4 furlongs.

Average width of the road—15 feet to 30 feet.

(2) Akua Shehara Road—Leading from 3rd mile Municipal Boundary Road in village Akua to 3rd mile Mymensingh Fulbaria Road in village Sheora. Length—1 mile.

Average width (crest)—10 feet to 12 feet.

No. 1817J.—5th April 1937.—Babu Sailendra Nath Das Gupta, Sub-Deputy Collector, Dacca, is appointed to be Circle Officer of Manikganj West Circle in that district.

No. 1822J.—5th April 1937.—Babu Bonoy Bhusan Chaudhuri, Sub-Deputy Collector, Netrakona, in the district of Mymensingh, is transferred to the headquarters station of the district of Dacca on general duty.

This cancels notification No. 1617J., dated the 23rd March 1937, transferring him to Manikganj as Circle Officer, West Circle, in the district of Dacca.

No. 1223R.—6th April 1937.—In exercise of the power delegated to me by Government notification No. 10106L.R., dated the 14th July 1936, and with reference to notification No. 198R., dated the 26th January 1937, appointing certain gentlemen to be Chairman and members of the Elashin Debt Settlement Board in the Tangail subdivision of the Mymensingh district, I hereby direct under section 4 of the Bengal Agricultural Debtors Act, 1935, that the name of Munshi Enayetulla reported to be dead be removed from the list of members.

I hereby appoint under section 3 (*2*) of the Act, 1935, Khondokar Khalesuddin in place of Munshi Enayetulla, deceased.

No. 1224R.—6th April 1937.—In exercise of the power delegated to me by Government notification No. 10106L.R., dated the 14th July 1936, and with reference to notification No. 198R., dated the 26th January 1937, appointing certain gentlemen to be Chairman and members of the Atia Debt Settlement Board in the Tangail subdivision of the Mymensingh district, I hereby direct under section 4 of the Bengal Agricultural Debtors Act, 1935, that the name of Maulvi Madari Sarkar reported to be dead be removed from the list of members.

I hereby appoint under section 3 (*2*) of the Bengal Agricultural Debtors Act, 1935, Maulvi Akkel Mamud Bhuiya in place of Maulvi Madari Sarkar, deceased.

No. 1871J.—6th April 1937.—It is hereby notified for general information that, under rule 63 (*2*) of the Bengal Jail Code, 1919, Rev. L. Barber of the Faridpur Mission House is appointed in place of Rev. A. E. Smith to be a non-official visitor of the Faridpur District Jail for a period of two years, with effect from the date of this notification.

No. 1246R.—7th April 1937.—In exercise of the power delegated to me under Government notification No. 10106L.R., dated the 14th July 1936, and with reference to notification No. 7346L.R., dated the 23rd March 1937, sanctioning the establishment of the Nagarkanda Debt Settlement Board in the Sadar subdivision of the Faridpur district, published at page 758, Part I of the *Calcutta Gazette*, dated the 1st April 1937, I hereby appoint under section 3 (*2*) of the Bengal Agricultural Debtors Act, 1935 (Bengal Act VII of 1936), the following persons to be the Chairman and members of the said board for a term of three years:—

Babu Ramani Mohan Nag, Chairman.

Members.

Babu Biraj Mohan Joardar.
Babu Ramani Mohan Bhowmik.
Munshi Gaijuddin Fakir.
Munshi Serajuddin Sariff.

No. 1897J.—7th April 1937.—It is hereby notified for general information that, under rule 63 (*2*) of the Bengal Jail Code, 1919, Khan Sahib Maulvi Abul Hasnat Ahmed is re-appointed a non-official visitor of the Dacca Central Jail for a further period of two years, with effect from the 14th March 1937.

H. R. WILKINSON, *Commissioner (offg.)*.

Ramna, Dacca, the 6th April 1937.

Dr. R. C. Majumdar, M.A., Ph.D., a duly nominated candidate for election to the Bengal Legislative Assembly from Dacca University Constituency, lodged with me his return of election expenses and declarations on the 1st April 1937. They may be inspected in my office on payment of the prescribed fee of Re. 1 during office hours—11 a.m. to 5 p.m.

H. R. WILKINSON, *Returning Officer (Commissioner).*

Ramna, Dacca, the 6th April 1937.

Babu Atul Chandra Sen, a duly nominated candidate for election to the Bengal Legislative Assembly from East Bengal Municipal (Urban) General Constituency, lodged with me his return of election expenses and declarations on the 31st March 1937. They may be inspected in my office on payment of the prescribed fee of Re. 1 during office hours—11 a.m. to 5 p.m.

H. R. WILKINSON, *Returning Officer (Commissioner).*

Ramna, Dacca, the 6th April 1937.

Babu Amiya Kumar Roy Choudhury, a duly nominated candidate for election to the Bengal Legislative Council from Dacca Division South (General) Constituency, lodged with me his return of election expenses and declarations on the 30th March 1937. They may be inspected in my office on payment of the prescribed fee of Re. 1 during office hours—11 a.m. to 5 p.m.

H. R. WILKINSON, *Returning Officer (Commissioner).*

Ramna, Dacca, the 6th April 1937.

Maharaja Sir Manmatha Nath Roy Chaudhury, a duly nominated candidate for election to the Bengal Legislative Assembly from Dacca Landholders' Constituency, lodged with me his return of election expenses and declarations on the 20th March 1937. They may be inspected in my office on payment of the prescribed fee of Re. 1 during office hours—11 a.m. to 5 p.m .

H. R. WILKINSON, *Returning Officer (Commissioner).*

Ramna, Dacca, the 6th April 1937.

Maulvi Md. Shahidulla, a duly nominated candidate for election to the Bengal Legislative Assembly from Dacca University Constituency, lodged with me his return of election expenses and declarations on the 2nd April 1937. They may be inspected in my office on payment of the prescribed fee of Re. 1 during office hours—11 a.m. to 5 p.m.

H. R. WILKINSON, *Returning Officer (Commissioner).*

Dacca, the 5th April 1937.

It is hereby notified for general information that, under section 13 of the Bengal Village Self-Government Act, V of 1919, Khetra Mohan Sen has been elected to be a member of the Jaigir union board in Manikganj police-station, in Manikganj subdivision of the district of Dacca, *vice* Gakulananda Goswami, deceased.

J. D. TYSON, *District Magistrate.*

Dacca, the 5th April 1937.

Return of election expenses filed by Babu Sitanath Biswas, an unsuccessful candidate from the Dacca Rural East General Scheduled Castes Constituency of the Bengal Legislative Assembly.

Under rule 9 of the Bengal Legislative Assembly and the Bengal Legislative Council Electoral (Election Expenses and Election Petitions) Rules, 1936, it is hereby notified for the information of all those concerned that the return of election expenses under rule 7 (2) of the aforesaid rules has been filed before me on the 30th March 1937 by Babu Sitanath Biswas, an unsuccessful candidate from the Dacca Rural East General Scheduled Castes Constituency of the Bengal Legislative Assembly. This declaration is open to inspection from 11 a.m. to 5 p.m. in my office in the Dacca Magistracy on payment of a fee of Re. 1 only. Attested copy of the return or any part thereof can be obtained from this office on payment of a fee of Rs. 2 only.

[ILLEGIBLE], for *Returning Officer. (District Magistrate).*

Narayanganj, the 3rd April 1937.

It is hereby notified for general information that, under rule 9 of the Bengal Legislative Assembly and the Bengal Legislative Council Electoral (Election Expenses and Election Petitions) Rules, 1936, that Kazi Jalaluddin Akbar, an unsuccessful candidate from the Narayanganj Rural East Muhammadan Constituency of the Bengal Legislative Assembly, has lodged with me his return of election expenses and declarations on the 31st day of March 1937, as required in Government of Bengal, Appointment Department, Reforms, Nos. 5816-903A.R., dated 12th March 1937. They may be inspected in my office on payment of the prescribed fee of Re. 1 only and attested copy of the same or any part thereof may be had on payment of a fee of Rs. 2 only between the hours of 11 a.m. and 5 p.m.

ANWARUDDIN AHMAD, for *Returning Officer (Subdivisional Officer).*

Narayanganj, the 3rd April, 1937.

It is hereby notified for general information that, under rule 9 of the Bengal Legislative Assembly and the Bengal Legislative Council Electoral (Election Expenses and Election Petitions) Rules, 1936, that Maulvi Ahmad Ali, an unsuccessful candidate from the Narayanganj Rural South Muhammadan Constituency of the Bengal Legislative Assembly, has lodged with me his return of election expenses and declarations on the 1st day of April 1937, as required in Government of Bengal, Appointment Department, Reforms, No. 5816-903A.R., dated the 12th March 1937. They may be inspected in my office on payment of the prescribed fee of Re. 1 only and attested copy of the same or any part thereof may be had on payment of a fee of Rs. 2 only between the hours of 11 a.m. and 5 p.m.

ANWARUDDIN AHMAD, for *Returning Officer (Subdivisional Officer).*

Gopalganj, the 4th April 1937.

Notice is hereby given for the information of the public that Maulvi Fazlul Hoque Chowdhury, who stood as a candidate from the Gopalganj Muhammadan Constituency for election in the Bengal Legislative Assembly, has lodged with the Returning Officer on the 2nd April 1937 a return of his election expenses supported by necessary declarations as required under rule 9 of the Bengal Legislative Assembly and the Bengal Legislative Council Electoral (Election Expenses and Election Petitions) Rules, 1936. The return may be inspected in the office of the undersigned on any working day during office hours between 11 a.m. and 5 p.m. on payment of a fee of rupee one and attested copy or copies thereof may be obtained on payment of a fee of rupees two only for each copy or any part thereof.

K. L. BANERJEE, *Returning Officer and Subdivisional Officer.*

Dacca, the 5th April 1937.

Return of election expenses filed by Kazi Jalaluddin Akbar, an unsuccessful candidate from the Dacca Rural Central Muhammadan Constituency of the Bengal Legislative Assembly.

Under rule 9 of the Bengal Legislative Assembly and the Bengal Legislative Council Electoral (Election Expenses and Election Petitions) Rules, 1936, it is hereby notified for the information of all those concerned that the return of election expenses under rule 7 (2) of the aforesaid rules has been filed on the 30th March 1937 by Kazi Jalaluddin Akbar, an unsuccessful candidate from the Dacca Rural Central Muhammadan Constituency of the Bengal Legislative Assembly. This declaration is open to inspection from 11 a.m. to 5 p.m. in my office in the Dacca Magistracy on payment of a fee of Re. 1 only. Attested copy of the return or any part thereof can be obtained from this office on payment of a fee of Rs. 2 only.

[ILLEGIBLE], *Returning Officer (Sadar Subdivisional Officer).*

Tangail, the 5th April 1937.

Maulvi Abdul Halim, a candidate for election to the Bengal Legislative Assembly from the Tangail South Muhammadan Rural Constituency, lodged with me his return of election expenses and declarations on the 31st March 1937. They may be inspected in my office on payment of the prescribed fees during office hours 11 a.m. to 5 p.m.

[ILLEGIBLE], *Returning Officer. (Subdivisional Magistrate).*

Presidency Division—Calcutta.

No. 471M.—31st March 1937.—In accordance with section 50 of the Bengal Municipal Act, 1932 (Bengal Act XV of 1932), it is hereby notified for general information that Babu Nibaran Chandra Chatterjee, B.A., has been duly elected Vice-Chairman of the Chakdah Municipality in the district of Nadia, *vice* Maulvi Kazi Mohammad Afif, elected Chairman of the municipality.

No. 210J.G.—5th April 1937.—It is hereby notified for general information that, in exercise of the powers conferred on me by rule 691A of the Bengal Jail Code, Volume I, 6th Edition, read with Government letter No. 1083P.J., dated the 7th April 1934, to the address of the Inspector-General of Prisons, Bengal, I appoint Maulvi S. M. Abdus Subhan, Head Maulvi, Baraset Government School, to be an Honorary Religious Teacher for imparting moral instructions to the male Muhammadan prisoners in the Baraset Sub-Jail in the district of the 24-Parganas for a period of two years with effect from the date of this notification. He will also conduct their Jumma prayers.

No. 224J.G.—7th April 1937.—It is hereby notified for general information that in exercise of the powers conferred on me by rule 63 (2) of the Bengal Jail Code, 1919, Volume I, as revised, I appoint Maulvi Abdul Aziz, B.L., and Babu Bhujanga Bhusan Ray, L.M.P., to be non-official visitors of the Kandi Sub-Jail in the district of Murshidabad for a period of two years, with effect from the date of this notification.

H. J. TWYNAM, *Commissioner.*

Calcutta, the 6th April 1937.

Notice under rule 9 of the Bengal Legislative Assembly and the Bengal Legislative Council Electoral (Election Expenses and Election Petitions) Rules, 1936, at page 139 of the Bengal Electoral Conduct of Elections Rules.

The undermentioned candidate for general election to the Muslim Chamber of Commerce Constituency of the Bengal Legislative Assembly has lodged return of election expenses on the date mentioned against his name.

Any person is, on payment of a fee of one rupee, entitled to inspect such return or declaration in the office of the Commissioner, Presidency Division, at 3, Charnock Place, Calcutta, during office hours and, on payment of a fee of Rs. 2 for each copy, to obtain attested copies thereof or of any part thereof.

Name of candidate.	Date on which return was lodged with the Returning Officer
Mr. Gulamhoosein A. Dossani ..	20th March 1937.

A. K. GUHA, *Personal Assistant for Commissioner (Returning Officer).*

Alipore, the 3rd April 1937.

It is hereby notified for the information of the public that the committee of management for the Baraset Government School has been reconstituted with the following members:—

The Subdivisional Officer, Baraset, *Ex-officio* President.

Babu Ramesh Chandra Sen Gupta, munsif, Baraset, *Ex-officio* Member other than Inspecting Officer of the Education Department—Vice-President.

The Head Master, Baraset Government H. E. School, *Ex-officio* Secretary.

Babu Srish Chandra Ganguly, Assistant Head Master, Baraset Government School—Representative of staff.

Dr. Bimal Bihari Bose—Representative of parents and guardians.

Maulvi Abdul Aziz—Representative of parents and guardians.

S. M. BHOWMIK, for *District Magistrate.*

Jessore, the 5th April 1937.

Erratum.—In the notification, dated 20th February 1937, under sub-section 2 of section 6 of the Bengal Village Self-Government Act, 1919 (Bengal Act V of 1919), published at page 448 of the *Calcutta Gazette*, dated 4th March 1937, the following correction is made:—

Manirampur police-station.

Nehalpur union board.

Read Tasim Biswas *for* the first name Jasim Biswas.

W. ISLAM, for *District Magistrate.*

Krishnagar, the 5th April 1937.

Under rule 9 of the Bengal Legislative Assembly and the Bengal Legislative Council Electoral (Election Expenses and Election Petitions) Rules, 1936, at page 139 of the Bengal Electoral Conduct of Elections Rules, 1936, the undermentioned candidates for general elections to the Nadia West Muhammadan and the Nadia Rural General Constituencies of the Bengal Legislative Assembly have lodged returns of election expenses with the undersigned who is the Returning Officer of the constituency on the dates mentioned against their names. The returns may be inspected in the office of the District Magistrate of Nadia at Krishnagar during office hours on payment of a fee of rupee one only:—

Name of constituency.	Name of candidate.	Date of filing the return of expenses.
Nadia West Muhammadan Rural ..	Maulvi Afsaruddin Ahmed ..	9th March 1937.
Nadia Rural General ..	Babu Lakshmi Narayan Biswas ..	17th March 1937.
Ditto ..	Babu Kanai Lal Biswas ..	22nd March 1937
Ditto ..	Babu Monoranjan Das ..	2nd April 1937.
Ditto ..	Babu Khitish Chandra Mukherji ..	7th April 1937.

M. M. STUART, *Returning Officer (District Magistrate).*

Calcutta, the 1st April 1937.

It is notified under rule 9 of the Bengal Legislative Assembly Electoral (Election Expenses and Election Petitions) Rules, 1936, that Khan Bahadur Muhammad Fazlul Karim, a candidate to the by-election of the Bengal Legislative Assembly from the Calcutta North Muhammadan (Urban) Constituency, has lodged his return of election expenses and declaration on the 1st April 1937.

It may be inspected in the election office at No. 2, Bankshall Street, on payment of proper fees between the hours of 1 p.m. and 4 p.m.

R. GUPTA, *Chief Presidency Magistrate and Returning Officer.*

Orders by the Deputy Inspector-General of Police, Intelligence Branch, C. I. D.

Calcutta.—No. 547/R.O.—8th April 1937. —Sub-Inspector Prakash Chandra Mazumdar is promoted to act as Inspector with effect from 16-3-1937, a.m., *vice* Babu Pramoda Charan Mukharji, Inspector, acting as Deputy Superintendent.

C. E. S. FAIRWEATHER,
Deputy Inspector-General of Police.

Orders by the Deputy Inspector-General of Police, Presidency Range.

Calcutta.—No. 2098. — 6th April 1937.— Maulvi Muhammad Sultan, Inspector, E. B Railway, Sealdah, was allowed 24 days' leave on average pay, on medical certificate, with effect from 8-3-1937, a.m

Babu Shashi Kumar Ray Chaudhuri, Inspector, Murshidabad, is granted 3 months' leave on average pay, under rule 81 (*b*) (*ii*) of the Fundamental Rules, with effect from 1st April 1937.

Sub-Inspector Jogendra Kanta Ghatak of the 24-Parganas is appointed to act as Inspector in the above vacancy.

The transfer is sanctioned in the interests of public service.

Babu Sushil Kumar Mukharji, Inspector, Khulna, is granted 2 months' leave on average pay, on medical certificate, in extension of the leave already granted to him.

The existing acting arrangement will continue.

R. M. WRIGHT,
Deputy Inspector-General of Police.

Rajshahi Division—Jalpaiguri.

No. 1472M.—6th April 1937.—In exercise of the powers delegated to me by Government notification No. 10108 L.R., dated the 14th July 1936, I hereby appoint under section 3 (2) of the Bengal Agricultural Debtors Act, 1935 (Bengal Act VII of 1936), for a term of three years from 15th April 1937, the following persons to be Chairmen and members respectively of the undermentioned Debt Settlement Boards established in the Serajganj subdivision of the Pabna district under Government notification No. 7345 L.R., dated the 23rd March 1937:—

Kaoakola Debt Settlement Board.

Maulvi Khaliluddin Talukdar, Chairman.

Members.

Maulvi Kashemali Talukdar.
Maulvi Kasimuddin Ahmed.
Babu Ram Kumar Ghosh.
Babu Bhabesh Chandra Chakravarty.

Kalia-Haripur Debt Settlement Board.

Maulvi Abul Hossain Bhuya, Chairman.

Members.

Maulvi Md Kasimuddin.
Dr. Sonaulla Sarker.
Dr. Purna Chandra Pal.
Babu Devendra Nath Neogy.

Bagbari Debt Settlement Board.

Babu Jogesh Chandra Datta, Chairman.

Members.

Babu Gopal Chandra Chakraborty.
Babu Sarat Chandra Rai Choudhury.
Maulvi Rostom Mahammad Khan.
Maulvi Abdur Rahaman Talukdar.

Ratankandi Debt Settlement Board.

Maulvi Parbatulla Talukdar, Chairman.

Members.

Babu Upendra Nath Roy.
Maulvi Abdur Gofur Akanda.
Maulvi Miajan Talukdar.
Maulvi Babar Ali Sarkar.

Chhangachha Debt Settlement Board.

Maulvi Karim Baksha Talukdar, Chairman.

Members.

Maulvi Babar Ali Talukdar.
Maulvi Mozahar Ali Khan.
Babu Rohini Kanta Chakravarty.
Maulvi Abed Ali Sheikh.

Natuarpara Debt Settlement Board.

Maulvi Desharuddin Ahmed, Chairman.

Members.

Maulvi Kefatulla Sarker.
Maulvi Buzarcha Meher Tarafdar.
Maulvi Jahiruddin Tarafdar.
Maulvi Naziruddin Pandit.

Sonamukhi Debt Settlement Board.

Babu Upendra Nath Das, Chairman.

Members.

Maulvi Yusufuddin Talukdar.
Babu Akshoy Kumar Deb.
Maulvi Abdul Jalil Sarkar
Maulvi Hossain Ali Sarkar.

Maijbari Debt Settlement Board.

Maulvi Afajuddin Munshi, Chairman.

Members.

Maulvi Jalaluddin Munshi.
Maulvi Jaforuddin Talukdar.
Babu Krishna Lal Sarker.
Babu Panchanan Karmakar.

Subgachha Debt Settlement Board.

Maulvi Wasimuddin Talukdar, Chairman.

Members.

Babu Jagabandhu Dutta.
Maulvi Abdul Kader Talukdar.
Maulvi Bashiruddin Sarkar.
Maulvi Aftabuddin Ahmed.

Rai Daulatpur Debt Settlement Board.

Babu Haripada Roy, Chairman.

Members.

Babu Jotindra Mohan Roy.
Maulvi Kobadar Rahman Choudhury.
Maulvi Wasimuddin Ahmed.
Maulvi Kasiruddin Bhuya.

Jhaul Debt Settlement Board.

Babu Jagadish Chandra Dey, Chairman.

Members.

Maulvi Minnat Ali Talukdar.
Maulvi Bashiruddin Talukdar.
Babu Kamini Mohan Pal.
Maulvi Golam Kibria Mia.

Bhadraghat Debt Settlement Board.

Mir Shaheb Ali, Chairman.

Members.

Babu Mahendra Nath Chakravarty.
Babu Basanta Kumar Basak.
Maulvi Bazlar Rahman Bhuya.
Maulvi Abdul Wahab Sarkar.

Rupbati Debt Settlement Board.

Munshi Abdur Rahman, Chairman.

Members.

Munshi Kalimuddin Pramanik.
Munshi Hossain Ali Sarkar.
Munshi Serajul Haque Ahmed.
Babu Ketu Haldar.

Gala Debt Settlement Board.

Maulvi Khandkar Mohammad Hossain, Chairman.

Members.

Babu Lakshmi Narayan Sarkar.
Babu Satish Chandra Datta.
Maulvi Mohammed Harunar Rasid.
Maulvi Mahammad Nural Huda.

Porjana Debt Settlement Board.

Maulvi Mahammad Hossain Sarkar, Chairman.

Members.

Babu Chandra Nath Chakravarty.
Babu Tara Prasanna Chanda.
Maulvi Mafeluddin Mia.
Maulvi Azhar Ali Mia.

Beltail Debt Settlement Board.

Dr. Abbas Ali Ahmed, Chairman.

Members.

Dr. Panchanan Saha.
Babu Kutishwar Saha.
Dr. Azizuddin Ahmed.
Munshi Shanulla Sarkar.

Khukni Debt Settlement Board.

Babu Manindra Mohan Roy, Chairman.

Members.

Babu Monojendra Narayan Ghosh.
Maulvi Mahmad Rahmat Ulla.
Munshi Safetuddin Sarkar.
Maulvi Abdul Quadir Siddique.

Kaijuri Debt Settlement Board.

Babu Kshitish Chandra Maitra, Chairman.

Members.

Maulvi Paranulla Mandal.
Munshi Mohiuddin.
Munshi Kamaluddin Ahmed.
Babu Suresh Chandra Nandy.

Sonatani Debt Settlement Board.

Babu Surendra Nath Chakraborty, Chairman.

Members.

Babu Akshoy Kumar Roy.
Maulvi Delwar Ali Molla.
Maulvi Agarali Sarkar.
Maulvi Sekendar Ali Mandal.

Sadhachandpur Debt Settlement Board.

Maulvi Mozaffarali Talukdar, Chairman.

Members.

Maulvi Minnat Ali Sarkar.
Babu Prasanna Kumar Bhoumik.
Maulvi Abdul Latif Mia.
Maulvi Abdul Aziz.

Sthal Debt Settlement Board.

Rai Bahadur Raghupati Bhattacharjee, Chairman.

Members.

Maulvi Mahammed Jaher Ali.
Munshi Jenatulla Bepari.
Babu Narayan Chandra Bhattacharjee.
Babu Priya Nath Bhattacharjee.

Ghorjan Debt Settlement Board.

Maulvi Menhajuddin Ahmed, Chairman.

Members.

Maulvi Bahat Ali Talukdar.
Babu Nikunja Behari Saha.
Maulvi Abdul Baset Mia.
Babu Hara Kanta Chakrabarty.

Belkuchi Debt Settlement Board.

Babu Kalidas Choudhury, Chairman.

Members.

Babu Amar Chandra Pramanik.
Maulvi Abdus Sobhan.
Maulvi Ahsanulla.
Maulvi Sadar Uddin Talukdar.

Ullapara Debt Settlement Board.

Babu Debendra Nath Saha, Chairman.

Members.

Babu Ram Narayan Das Gupta, B.A.
Babu Banamali Saha.
Maulvi Asher Pramanik.
Maulvi Sukur Mamud Talukdar.

Panchokrosi Debt Settlement Board.

Babu Nripendra Nath Das Gupta, Chairman.

Members.

Babu Rudra Nath Talukdar.
Maulvi Noyanuddin Sarkar.
Maulvi Moyezuddin Pramanik.
Maulvi Haran Uddin Sarkar.

Purnimaganti Debt Settlement Board.

Maulvi Mozharul Islam, Chairman.

Members.

Khan Sahib Maulvi Mizanar Rahman.
Babu Hridaya Govinda Deb.
Maulvi Joid Uddin Sarkar.
Maulvi Akul Uddin Sarkar.

Pangasi Debt Settlement Board.

Babu Amulya Charan Saha, Chairman.

Members.

Babu Balaram Pal.
Babu Sribash Chandra Saha.
Maulvi Rohim Boksha Sarkar.
Maulvi Abdur Rahman Khan.

Saguna Debt Settlement Board.

Babu Manindra Nath Talukdar Choudhury, Chairman.

Members.

Babu Hari Mohan Talapatra.
Maulvi Ajab Ali Mandal.
Maulvi Eusof Ali Sarkar.
Maulvi Alek Ulla Mandal.

No. 1091J.—7th April 1937.—Maulvi Momtazuddin, Circle Officer, Mainaguri, in the district of Jalpaiguri, is transferred to Jalpaiguri Sadar temporarily to work as Circle Officer.

The transfer is made in the public interest.

No. 1098J.—7th April 1937.—Babu Bhupendra Nath Sen, Sub-Deputy Collector and Circle Officer, Debiganj, in the district of Jalpaiguri, is allowed leave on average pay for thirty days, under rule 81(*b*)(*ii*) of the Fundamental Rules, with effect from 2nd April 1937 or any subsequent date on which he may avail himself of the leave.

The Circle Officer is likely to return to his post on the expiry of the leave.

No. 1142J.—9th April 1937.—Babu Saroj Ballav Biswas, Sub-Deputy Collector and Circle Officer, Gaibandha, in the district of Rangpur, is allowed leave on average pay for eight days, under rule 81(*b*) (*ii*) of the Fundamental Rules, with effect from 5th April 1937 or any subsequent date on which he may avail himself of the leave.

The Circle Officer is likely to return to his post on the expiry of the leave.

No. 1147J.—9th April 1937.—Babu Benoy Kumar Mukherjee, Sub-Deputy Collector and Circle Officer, Bhangoora, in the district of Pabna, is allowed leave on average pay for six days, under rule 81(*b*) (*ii*) of the Fundamental Rules, with effect from 12th April 1937 or any subsequent date on which he may avail himself of the leave.

The Circle Officer is likely to return to his post on the expiry of the leave.

L. R. FAWCUS, *Commissioner (offg.).*

No. 3067J.R.—6th April 1937.—It is hereby notified under rule 9 of the Bengal Legislative Assembly and Council Electoral (Election Expenses and Election Petitions) Rules, 1936, that the candidates named below, duly nominated for election to the Bengal Legislative Assembly from the constituencies noted against their names, have lodged with the Returning Officer on the dates noted against their names returns of their expenses supported by necessary declarations:—

Name of candidate.	Name of constituency.	Date on which the return has been lodged.
Babu Ramani Mohan Das.	Bogra-*cum*-Pabna Rural General.	5th April 1937.
Babu Haran Chandra Barman.	Ditto ..	6th April 1937.

The return may be inspected in the office of the Commissioner, Rajshahi Division, Jalpaiguri, during office hours on payment of a fee of Re. 1 only and attested copies or copies of any part thereof may be obtained from that office on payment of a fee of Rs. 2 only for each copy.

No. 3069J.R.—6th April 1937.—It is hereby notified under rule 9 of the Bengal Legislative Council Electoral (Election Expenses and Election Petitions) Rules, 1936, that Maulvi Humayun Reza Choudhury, a member duly elected in the bye-election, to the Bengal Legislative Council from the Rajshahi-*cum*-Malda Rural Muhammadan Constituency, has lodged with the Returning Officer on the 5th April 1937 a return of his expenses supported by necessary declarations. The return may be inspected in the office of the Commissioner, Rajshahi Division, Jalpaiguri, during office hours, on payment of a fee of Re. 1 only and attested copies or copies of any part of it may be obtained from that office on payment of a fee of Rs. 2 only for each copy.

S. K. GHOSH, for *Commissioner and Returning Officer.*

Malda, the 17th February 1937.

Under rule 32A of the Election Rules under the Local Self-Government Act, it is notified for general information that the 17th May 1937 has been fixed for the by-election of a member for the Malda local board from thana Kharba to fill up the vacancy caused by the removal of Rai Sahib Kamala Kanta Bagchi under section 18(*l*)(*c*) of the Local Self-Government Act.

B. R. SEN, *District Magistrate.*

Rajshahi, the 2nd April 1937.

No. 3757J.—It is hereby notified for general information that, under section 13 of the Bengal Village Self-Government Act, 1919 (Bengal Act V of 1919), read with rule 35 of the rules for the election and appointment of members of union boards, etc., Babu Nirmal Chandra Bisi has been duly elected to be a member of the Joari union board in Baraigram police-station in the Nator subdivision of the district of Rajshahi, *vice* Maulvi Abbas Ali Paltan, deceased.

No. 3758J.—It is hereby notified for general information that, under section 13 of the Bengal Village Self-Government Act, 1919 (Bengal Act V of 1919), read with rule 35 of the rules for the election and appointment of members of union boards, etc., Munshi Rahimuddin Pramanik has been duly elected to be a member of the Madhnagar union board in Nator police-station, in the Nator subdivision of the district of Rajshahi, *vice* Babu Kedar Nath Maitra, deceased.

No. 3759J.—It is hereby notified for general information that, under section 13 of the Bengal Village Self-Government Act, 1919 (Bengal Act V of 1919), read with rule 35 of the rules for the election and appointment of members of union boards, etc., Maulvi Kasim Uddin Mollah has been duly elected to be a member of Jamnagar union board in Bagatipara police-station in the Nator subdivision of the district of Rajshahi, *vice* Maulvi Maheshuddin Sarkar, deceased.

A. S. RAY, *District Magistrate.*

Malda, the 6th April 1937.

It is notified for general information, under rule 9 of the Bengal Legislative Assembly and the Bengal Legislative Council Electoral (Election Expenses and Election Petitions) Rules, 1936, that the persons named below have filed their return of election expenses and the declarations on the dates and in respect of the constituencies noted against their names:—

	Name of candidate.	Name of constituency of the Bengal Legislative Assembly.	Date on which the return of election expenses and the declarations have been lodged.
1.	Satish Chand Agarwala ..	Malda General (Rural) ..	5th April 1937.
2.	Bidhu Bhusan Kumar ..	Ditto ..	Ditto.

The returns can be inspected on office days during office hours at the office of the District Magistrate, Malda, by any person on a payment of a fee of Re. 1 only, and the attested copies of the same or any part thereof may be had on payment of a fee of Rs. 2 only.

B. R. SEN, *Returning Officer.*

CO-OPERATIVE CREDIT AND RURAL INDEBTEDNESS DEPARTMENT.

Debt Conciliation.

NOTIFICATIONS.

Mymensingh.—No. 791D.C.—12th April 1937.—In exercise of the power conferred by sub-section (*1*) of section 3 of the Bengal Agricultural Debtors Act, 1935 (Bengal Act VII of 1936), and in partial modification of notification No. 17867L.R., dated the 23rd December 1936, sanctioning the establishment of the Sahildeo Debt Settlement Board, published at page 2888 of Part I of the *Calcutta Gazette*, dated the 31st idem, the Governor is pleased to declare the area for which the said Board is established to be the whole of Samaj-Sahildeon and Sunair unions.

Mymensingh.—No. 792D.C.—12th April 1937.—In exercise of the power conferred by sub-section (*1*) of section 3 of the Bengal Agricultural Debtors Act, 1935 (Bengal Act VII of 1936), and in partial modification of notification No. 16011L.R., dated the 21st November 1936, sanctioning the establishment of the Raipur Debt Settlement Board, published at page 2700 of Part I of the *Calcutta Gazette*, dated the 3rd December 1936, the Governor is pleased to declare the area for which the said Board is established to be the whole of Raipur and Kailati unions.

Mymensingh.—No. 793D.C.—12th April 1937.—In exercise of the power conferred by sub-section (*1*) of section 3 of the Bengal Agricultural Debtors Act, 1935 (Bengal Act VII of 1936), and in partial modification of notification No. 16011L.R., dated the 21st November 1936, sanctioning the establishment of the South Ganda Debt Settlement Board, published at page 2700 of Part I of the *Calcutta Gazette*, dated the 3rd December 1936, the Governor is pleased to declare the name of the said Board to be replaced by the Ganda Debt Settlement Board and the area for which the said Board is established to be the whole of Ganda union.

Mymensingh. — No. 794D.C. —12th April 1937.—In exercise of the power conferred by sub-section (*1*) of section 3 of the Bengal Agricultural Debtors Act, 1935 (Bengal Act VII of 1936), and in partial modification of notification No. 16284L.R., dated the 28th November 1936, sanctioning the establishment of the Tatihati Debt Settlement Board, published at page 2703 of Part I of the *Calcutta Gazette*, dated the 3rd December 1936, the Governor is pleased to declare the area for which the said Board is established to be the whole of Tatihati and Sreebordi unions.

Mymensingh. — No. 795D.C. — 12th April 1937.—In exercise of the power conferred by sub-section (*1*) of section 3 of the Bengal Agricultural Debtors Act, 1935 (Bengal Act VII of 1936), and in partial modification of notification No. 16284L.R., dated the 28th November 1936, sanctioning the establishment of the Khariar Kazirchar Debt Settlement Board, published at page 2703 of Part I of the *Calcutta Gazette*, dated the 3rd December 1936, the Governor is pleased to declare the area for which the said Board is established to be the whole of Khariar Kazirchar and Bhelua unions.

Mymensingh. — No. 796D.C. —12th April 1937.—In exercise of the power conferred by sub-section (*1*) of section 3 of the Bengal Agricultural Debtors Act, 1935 (Bengal Act VII of 1936), and in partial modification of notification No. 16011L.R., dated the 21st November 1936, sanctioning the establishment of the Maghan Siadhar Debt Settlement Board, published at page 2700 of Part I of the *Calcutta Gazette*, dated 3rd December 1936, the Governor is pleased to declare the area for which the said Board is established to be the whole of Maghan Siadhar and Tetulia unions.

Mymensingh. — No. 797D.C. — 12th April 1937.—In exercise of the power conferred by sub-section (*1*) of section 3 of the Bengal Agricultural Debtors Act, 1935 (Bengal Act VII of 1936), and in partial modification of notification No. 17867L.R., dated the 23rd December 1936, sanctioning the establishment of the Sahildeo Debt Settlement Board, published at page 2888 of Part I of the *Calcutta Gazette*, dated the 31st idem, the Governor is pleased to declare the area for which the said Board is established to be the whole of Samaj-Sahildeon, Suair and Gaglajore unions.

Mymensingh. — No. 798D.C.—12th April 1937.—In exercise of the power conferred by sub-section (*1*) of section 3 of the Bengal Agricultural Debtors Act, 1935 (Bengal Act VII of 1936), and in partial modification of notification No. 17867L.R., dated the 23rd December 1936, sanctioning the establishment of the Khaliajuri Debt Settlement Board, published at page 2888 of Part I of the *Calcutta Gazette*, dated the 31st idem, the Governor is pleased to declare the area for which the said Board is established to be the whole of Khaliajuri union and Panchayet union No. II of Khaliajuri police-station.

Mymensingh.—No. 799D.C.—12th April 1937.—In exercise of the power conferred by sub-section (*1*) of section 3 of the Bengal Agricultural Debtors Act, 1935 (Bengal Act VII of 1936), and in partial modification of notification No. 1521L.R., dated the 25th January 1937, sanctioning the establishment of the Teosri Debt Settlement Board, published at page 174 of Part I of the *Calcutta Gazette*, dated the 28th idem, the Governor is pleased to declare the area for which the said Board is established to be the whole of Teosri union and Panchayet union No. VIII of Madan police-station.

Faridpur.—No. 800D.C.—12th April 1937.—In exercise of the power conferred by sub-section (*1*) of section 3 of the Bengal Agricultural Debtors Act, 1935 (Bengal Act VII of 1936), the Governor is pleased to establish the undermentioned Debt Settlement Boards in the Goalundo subdivision of the Faridpur district for the local areas respectively specified against each:—

Name of Debt Settlement Board.	Name of union comprising the local area.
Bagmara	.. Bagmara.
Barat	.. Barat.
Debgram	.. Debgram.
Madapur	.. Madapur.

2. In exercise of the power conferred by sub-section (*1*) of section 40 of the said Act, the Governor is pleased to appoint the Subdivisional Magistrate of Goalundo, *ex-officio*, as Ordinary Appellate Officer as defined in clause (*6*) of rule 2 of the Bengal Agricultural Debtors Rules, 1936, and the senior munsif of Goalundo, *ex-officio*, as Special Appellate Officer as defined in the said clause for each of the said local areas specified in paragraph 1.

E. W. HOLLAND,

Joint Secy. to the Govt. of Bengal.

Registered No. C207

The Calcutta Gazette

THURSDAY, APRIL 15, 1937

PART IA

Orders and Notifications by the Government of India republished for general information.

GOVERNMENT OF INDIA.

REFORMS OFFICE.

NOTIFICATION.

New Delhi, the 1st April 1937.

No. F. 5/11/37-G. (A).—The following documents are published for general information :—

* * * * *

(3) Instrument of Instructions to the Governor-General of India.

* * * * *

INDIA.

INSTRUCTIONS passed under the Royal Sign Manual and Signet to the Governor-General of India.

Dated 8th March 1937. GEORGE R. I.

INSTRUCTIONS TO OUR GOVERNOR-GENERAL OF INDIA.

GIVEN at Our Court at Buckingham Palace the Eighth day of March 1937 in the First year of Our Reign.

WHEREAS by Letters Patent bearing date the fifth day of March Nineteen hundred and thirty-seven. We have made permanent provision for the office of Governor-General of India:

AND WHEREAS by those Letters Patent and by the Government of India Act, 1935 (hereinafter called "the Act") certain powers, functions and authority for the Government of India are declared to be vested in the Governor-General:

AND WHEREAS His late Majesty King George V did before the enactment of the Act issue certain Instructions under His Royal Sign Manual to Our said Governor-General bearing date the fifteenth day of March nineteen hundred and twenty-one, and did subsequently amend the same:

AND WHEREAS the impending commencement of Part III of the Act has rendered it necessary to revoke the said Instructions:

AND WHEREAS without prejudice to the provision in the Act that our Governor-General shall be under the general control of and comply with such particular directions, if any, as may from time to time be given by Our Secretary of State and to the duty of Our Governor-General to give effect to any Instructions so received, We are minded to make general provision regarding the manner in which during the operation of the provisions of Part XIII of the Act Our said Governor-General shall execute all things which according to the Act and the said Letters Patent belong to his office and to the trust which we have reposed in him:

NOW, THEREFORE, We do by these Our Instructions under Our Royal Sign Manual hereby revoke the aforesaid Instructions and declare Our pleasure to be as follows:—

A.—INTRODUCTORY.

I. Under these Our Instructions, unless the context otherwise require, the term "Governor-General" shall include every person for the time being acting as Governor-General according to the provisions of the Act.

II. Our Governor-General shall, with all due solemnity, cause Our Commission under Our Royal Sign Manual appointing him to be read and published in the presence of the Chief Justice of India for the time being or, in his absence, other Judge of the Federal Court, and of so many of the members of the Executive Council of Our Governor-General as may conveniently be assembled.

III. Our Governor-General shall take the oath of allegiance and the oath for the due execution of the office of Our Governor-General of India and for the due and impartial administration of justice, in the form hereto appended, which oaths the said Chief Justice or, in his absence, any Judge of the Federal Court, shall, and is hereby required to, tender and administer unto him.

IV. And We do authorise and require Our Governor-General by himself or by any other person to be appointed by him in that behalf to administer to every person appointed by Us or by the Governor-General in Council to be a member of the Governor-General's Executive Council and to every person appointed by him to be a Chief Commissioner the oaths of allegiance and of office and of secrecy hereto appended.

V. And We do further direct that every person who under these Instructions shall be required to take an oath may make an affirmation in place of an oath if he has any objection to making an oath.

VI. The provisions of the last four preceding paragraphs shall not apply to any person holding office at the date of the commencement of Part III of the Act.

B.—IN REGARD TO THE EXECUTIVE AUTHORITY OF THE GOVERNOR-GENERAL IN COUNCIL.

VII. It is Our will and pleasure that Our Governor-General shall use all endeavour consistent with the fulfilment of his responsibilities to Us and to Our Parliament for the welfare of Our Indian subjects, that the administration of the matters committed to the charge of Our Governor-General in Council may be conducted in harmony with the wishes of Our said subjects as expressed by their representatives in the Indian Legislature so far as the same shall appear to him to be just and reasonable: and shall so order the administration of his government as to further the policy of the Act for its conversion into a Federation of all India.

C.—IN REGARD TO RELATIONS BETWEEN THE GOVERNOR-GENERAL IN COUNCIL AND THE PROVINCES.

VIII. Whereas it is expedient for the common good of British India that the authority of Our Governor-General in Council and of the Indian Legislature in those matters which are by law assigned to them should prevail:

And whereas at the same time it is the purpose of the Act that the Governments and Legislatures of the Provinces should be free in their own sphere to pursue their own policy:

And whereas in the interest of the harmonious co-operation of the several members of the body politic, the Act has empowered Our Governor-General to exercise, at his discretion, certain powers affecting the relations between his Government and the Provinces:

It is Our will and pleasure that Our Governor-General in the exercise of these powers should give unbiased consideration as well to the views of the Governments of the Provinces as to those of his own Government whenever those views are in conflict and, in particular, when it falls to him to exercise his power to issue orders to the Governor of a Province for the purpose of securing that the executive authority of the Governor-General in Council is not impeded or prejudiced, or his power to determine whether Provincial law or Central law shall regulate a matter in the sphere in which both Legislatures have power to make laws.

IX. It is our desire that Our Governor-General shall by all reasonable means encourage consultation with a view to common action between his Government and the Provinces and between the Provinces themselves. It is further Our will and pleasure that Our Governor-General shall endeavour to secure the co-operation of the Provincial

Governments in the maintenance of such Central agencies and institutions for research as may serve to assist the conduct by Provincial Governments of their own affairs.

X. In particular We require Our Governor-General before giving his previous sanction to any legislative proposal which it is proposed to introduce in the Indian Legislature for the imposition or variation of taxes or duties by which the revenues of the provincial Governments are or may be directly affected or for varying the meaning of the expression "agricultural income," or for alteration of the principles on which under the provisions of the Act moneys are or may be distributed to the Provinces, to ascertain by the method which appears to him best suited to the circumstances of each case the views of those Governments upon the proposal.

XI. Before granting his previous sanction to the introduction into the Indian Legislature of any Bill or amendment wherein it is proposed to authorise the Governor-General in Council to give directions to a Province as to the carrying into execution in that Province of any Act of the Indian Legislature relating to a matter specified in Part II of the Concurrent Legislative List appended to the Act, it is Our will and pleasure that Our Governor-General shall take care to see that the Governments of the Provinces which would be affected by any such measure have been duly consulted upon the proposal, and upon any other proposals which may be contained in any such measure which involve the imposition of expenditure upon the revenues of the Provinces.

XII. In considering whether he shall give his assent to any Provincial law relating to a matter enumerated in the Concurrent Legislative List, which has been reserved for his consideration on the ground that it contains provisions repugnant to the provisions of an Act of the Indian Legislature, Our Governor-General, while giving full consideration to the proposals of the Provincial Legislature, shall have due regard to the importance of preserving substantially unimpaired the uniformity of law which the Indian Codes have hitherto embodied.

D.—MATTERS AFFECTING THE LEGISLATURE.

XIII. Without prejudice to the generality of his powers as to reservation of Bills, Our Governor-General shall not assent in Our name, to, but shall reserve for the signification of Our pleasure, any Bill of any of the classes herein specified, that is to say:—

(*a*) any Bill the provisions of which would repeal or be repugnant to the provisions of any Act of Parliament extending to British India;

(*b*) any Bill which in his opinion would, if it became law, so derogate from the powers of the High Court of any Province as to endanger the position which those Courts are by the Act designed to fill;

(c) any Bill regarding which he feels doubt whether it does, or does not, offend against the purposes of Chapter III, Part V, or section 299 of the Act;

(d) any Bill passed by a Provincial Legislature and reserved for his consideration which would alter the character of the Permanent Settlement.

XIV. It is further Our will and pleasure that in pursuance of the Agreement made between Us and His Exalted Highness the Nizam of Hyderabad as contemplated in Part III of the Act, Our Governor-General in declaring his assent in Our name to any Bill of the Legislature of the Central Provinces and Berar which has been reserved for his consideration, shall declare that his assent to the Bill in its application to Berar has been given by virtue of the Agreement between Us and His Exalted Highness the Nizam.

E.—GENERAL.

XV. And generally Our Governor-General shall do all that in him lies to maintain standards of good administration; to promote all measures making for moral, social and economic welfare and tending to fit all classes of the population to take their due share in public life; and to secure amongst all classes and creeds co-operation, goodwill and mutual respect for religious beliefs and sentiments; and he shall further have regard to this Instruction in the exercise of the powers by law conferred upon him in relation to matters whether of legislation or of executive government.

XVI. And finally it is Our will and pleasure that Our Governor-General should so exercise the trust reposed in him that the partnership between India and the United Kingdom within Our Empire may be furthered, to the end that India may attain its due place among our Dominions.

XVII. And We do hereby charge Our Governor-General to communicate these Our Instructions to the Members of his Executive Council and to publish the same in such manner as he may think fit.

APPENDIX.

FORM OF OATH OF ALLEGIANCE.

I, , do swear that I will be faithful and bear true allegiance to His Majesty, King George the Sixth, Emperor of India, His Heirs and Successors, according to Law.

So help me God.

FORM OF OATH OF OFFICE.

I, , do swear that I will well and truly serve Our Sovereign, King George the Sixth, Emperor of India, in the Office of , and that I will do right to all manner of people after the laws and usages of India, without fear or favour, affection or ill-will.

So help me God.

FORM OF OATH OF SECRECY FOR EXECUTIVE COUNCILLORS.

I, , do swear that I will not directly or indirectly communicate or reveal to any person or persons any matter which shall be brought under my consideration, or shall become known to me as a member of the Governor-General's Executive Council, except as may be required for the due discharge of my duties as such member, or as may be specially permitted by the Governor-General.

So help me God.

E. CONRAN-SMITH,

Joint Secy. to the Govt. of India.

GOVERNMENT OF INDIA.

REFORMS OFFICE.

NOTIFICATION.

New Delhi, the 1st April 1937.

No. F. 5/12/37-G. (A).—The following Orders of the King's Most Excellent Majesty in Council are published for general information:—

(1) The India and Burma (Burma Monetary Arrangements) Order, 1937.

(2) The Government of India (High Court Judges) Order, 1937.

(3) The India and Burma (Transitory Provisions) Order, 1937.

(4) The Government of India (Adaptation of Acts of Parliament) Order, 1937.

(5) The Government of India (Adaptation of Indian Laws) Order, 1937.

(6) The Government of Burma (Miscellaneous Financial Provisions) Order, 1937.

(7) The India and Burma (Trade Regulations) Order, 1937.

* * * * *

(9) The India, Burma and Aden (Transitory Provisions) (Taxation) Order, 1937.

THE INDIA AND BURMA (BURMA MONETARY ARRANGEMENTS) ORDER, 1937.

AT THE COURT AT BUCKINGHAM PALACE,

The 18th day of March, 1937.

PRESENT:

THE KING'S MOST EXCELLENT MAJESTY IN COUNCIL.

Whereas by section one hundred and fifty-eight of the Government of India Act, 1935 (in this Order referred to as "the India Act"), His Majesty in Council is empowered to make such provision as may appear to him to be necessary or proper for defining and regulating the relations between the monetary systems of India and Burma and for purposes connected with or ancillary to those purposes, and in particular, but without prejudice to the generality of that section, such provision as may appear to him to be necessary or proper for the purpose of giving effect to any arrangements with respect to the said matters made before the commencement of Part III of the India Act with the approval of the Secretary of State by the Governor of Burma in Council with the Governor-General in Council:

And whereas by section one hundred and thirty-seven of the Government of Burma Act, 1935 (in this Order referred to as "the Burma Act"), His Majesty in Council is empowered to make such provision with respect to the monetary system of Burma and matters

connected therewith or ancillary thereto as he thinks fit, and in particular, but without prejudice to the generality of that section, such provision as may appear to him to be necessary or proper for the purpose of giving effect to any arrangements with respect to the said matters made before the commencement of the Burma Act with the approval of the Secretary of State by the Governor of Burma in Council:

And whereas certain arrangements have been made with the approval of the Secretary of State between the Governor-General in Council and the Governor of Burma in Council with respect to the relations between the monetary systems of India and Burma after the separation of Burma from India:

And whereas by section two hundred and ninety-three of the India Act His Majesty in Council is empowered to provide that any law in force in British India shall, until repealed or amended by a competent Legislature or other competent authority, have effect subject to such adaptations and modifications as appear to His Majesty to be necessary or expedient for bringing the provisions of that law into accordance with the provisions of the India Act:

And whereas by section one hundred and forty-nine of the Burma Act His Majesty in Council is empowered to provide that any law in force in Burma shall, until repealed or amended by the Legislature or other competent authority, have effect subject to such adaptations and modifications as appear to His Majesty to be consequential on the separation of India and Burma:

And whereas a draft of this Order has been laid before Parliament in accordance with the provisions of sub-section (1) of section three hundred and nine of the India Act and sub-section (1) of section one hundred and fifty-seven of the Burma Act, and an address has been presented to His Majesty by both Houses of Parliament praying that an Order may be made in the terms of this Order:

Now, therefore, His Majesty, in the exercise of the powers conferred on him as aforesaid and of all other powers enabling him in that behalf, is pleased by and with the advice of His Privy Council to order, and it is hereby ordered, as follows:—

PART 1.

Introductory.

1. This Order may be cited as the India and Burma (Burma Monetary Arrangements) Order, 1937.

2. In this Order, unless the context otherwise requires,—

"the Bank" means the Reserve Bank of India;

"the Governor-General" means the Governor-General of India;

"India rupee coin" means silver rupees which are for the time being legal tender in British India;

"India subsidiary coin" means coin of a lower denomination than one rupee which is for the time being legal tender in British India;

"India notes" means currency notes of the Government of India and bank notes of the Bank, other than Burma notes;

"Burma notes" means the Burma bank notes and the overprinted currency notes of the Government of India, for the issue of which by the Bank provision is made in Part II of this Order;

"the Reserve Bank Act" means the Reserve Bank of India Act, 1934;

"separation" means the separation of India and Burma;

"legal tender", in relation to a note, means legal tender in payment or on account for the amount expressed therein;

and other expressions have the same meaning as in the Reserve Bank Act.

3. The Interpretation Act, 1889, applies for the interpretation of this Order as it applies for the interpretation of an Act of Parliament.

4. Unless the context otherwise requires, any reference in this Order to, or to any provisions of, the Reserve Bank Act shall be construed as a reference to that Act or those provisions as for the time being in force in India, and any reference in this Order to, or to any provisions of, any other Act shall be construed as a reference to that Act or those provisions as for the time being in force in India or as for the time being in force in Burma, as the context and the circumstances may require; and if any such Act or provisions have been repealed and re-enacted, either with or without modifications, any reference thereto in this Order shall be construed as a reference to the re-enacted Act or provisions as in force as aforesaid.

5.—(1) This Order shall come into force on separation.

(2) As respects the period between separation and the establishment of the Federation of India, references in this Order to the Governor-General shall be deemed to be references to the Governor-General in Council.

PART II.

Provisions to have effect as part of the Law of Burma.

General.

1. The provisions of this Part of this Order shall have effect as part of the law of Burma.

2. The Bank shall manage the currency of Burma and continue to carry on the business of banking in Burma, subject to the provisions of this Part of this Order.

3.—(1) Until the Governor of Burma otherwise determines, the standard monetary unit of Burma shall be the Indian rupee.

(2) If the standard monetary unit of Burma ceases to be the Indian rupee, any provisions of this Part of this Order which refer to values stated in terms of rupees shall have effect subject to such consequential adaptations as may be prescribed by Act of the Legislature.

Provisions as to Government Money, etc.

4.—(1) The Bank shall accept moneys for account of the Government of Burma, make payments up to the amount standing to the credit of its account, carry out its exchange, remittance and other banking operations, including the management of the Public Debt, and generally afford to it similar facilities to those which the Bank affords to the Governor-General.

(2) The Government of Burma shall entrust the Bank with all its money, remittance, exchange and banking transactions in Burma and in particular shall deposit all its cash balances with the Bank free of interest:

Provided that nothing in this sub-paragraph shall prevent the Government of Burma from carrying on money transactions at places where the Bank has no branch or agency and from holding at those places such balances as it may require.

(3) The Government of Burma shall entrust the Bank with the management of the Public Debt of Burma and with the issue of any new loans.

(4) The conditions on which the Bank shall perform the functions mentioned in this paragraph shall be the same as those regulating similar transactions between the Governor-General and the Bank, subject, however, to such adaptations and modifications as may be agreed upon between the Government of Burma and the Bank or as may, in default of agreement, be prescribed by the Governor of Burma.

Particulars of any such adaptations or modifications shall be laid as soon as may be before both Chambers of the Legislature.

(5) The provisions of this paragraph apply with any necessary modifications in relation to the Federal Fund of the Federated Shan States:

Provided that the adaptations and modifications to be agreed or prescribed under sub-paragraph (4) of this paragraph shall be separately agreed or prescribed in relation to the Federal Fund and there shall be no necessity for particulars of those adaptations or modifications to be laid before either Chamber of the Legislature.

5. The Bank shall not refuse to accept the moneys, and undertake the functions, which the Railway Board is by the Burma Act required to entrust to it.

Bank and Currency Notes.

6.—(1) The Bank shall as soon as may be after separation issue bank notes of distinctive design, to be known as "Burma bank notes".

(2) Burma bank notes shall be expressed in terms of the standard monetary unit of Burma and shall be of such denominational values as the Governor of Burma may determine after consultation with the Central Board.

(3) The design, form and material of Burma bank notes shall be such as may be prescribed by the Governor of Burma after consultation with the Central Board.

(4) During the period of twelve months immediately following separation the Bank may, in lieu of issuing Burma bank notes, or Burma bank notes of any particular denomination, issue currency notes of the Government of India overprinted with the words "Legal tender in Burma only":

Provided that the said period may from time to time be extended, either generally or in relation to notes of particular denominations, by the Governor of Burma after consultation with the Central Board.

7.—(1) Burma notes shall be legal tender in Burma:

Provided that on the recommendation of the Central Board the Governor of Burma may by notification in the Gazette of Burma declare that with effect from such date as may be specified in the notification any series of Burma notes of any denomination shall cease to be legal tender save at an office or agency of the Bank.

(2) India notes shall continue to be legal tender in Burma for such period or periods not being less than two years from separation, as the Governor of Burma may determine, or for such shorter period or periods as may be agreed between the Governor of Burma and the Bank, and thereafter such notes shall continue to be accepted at par at such places and for such further period or periods as may be determined by the Governor of Burma after consultation with the Bank:

Provided that India notes which have ceased in India to be legal tender save at an office or agency of the Bank shall not in Burma be legal tender save at an office or agency of the Bank.

(3) The Bank shall not re-issue Burma notes which are torn, defaced or excessively soiled.

8.—(1) Notwithstanding anything contained in any enactment or rule of law to the contrary, no person shall of right be entitled to recover from the Bank or the Government of Burma the value of any lost, stolen, mutilated or imperfect India note or Burma note.

(2) The Bank may with the previous sanction of the Governor of Burma prescribe the circumstances in which, and the conditions and limitations subject to which, the value of lost, stolen, mutilated or imperfect Burma notes may be refunded as of grace and the rules made under this sub-paragraph shall be laid on the table of both Houses of the Legislature.

(3) The value of lost, stolen, mutilated or imperfect India notes may be refunded as of grace in Burma in the circumstances and subject to the conditions and limitations prescribed for the time being in that behalf as respects British India under section twenty-eight of the Reserve Bank Act.

9.—(1) The Bank shall have the sole right to issue bank notes in Burma and the Government of Burma shall not issue any currency notes.

(2) No person in Burma other than the Bank shall draw, accept, make or issue any bill of exchange, hundi, promissory note or engagement for the payment of money payable to bearer on demand, or borrow, owe or take up any sum or sums of money, on the bills, hundis, or notes payable to bearer on demand of any such person:

Provided that cheques or drafts, including hundis, payable to bearer on demand or otherwise may be drawn on a person's account with a banker, shroff, or agent.

(3) Any person contravening the provisions of the last preceding sub-paragraph shall be punishable with fine which may extend to the amount of the bill, hundi, note or engagement in respect whereof the offence is committed; but no prosecution under this sub-paragraph shall be instituted except on complaint made by the Bank.

Coinage.

10. (1) India rupee coin and India subsidiary coin shall continue to be legal tender in Burma to the like extent and subject to the same conditions as immediately before separation for such period or periods, not expiring, in the case of any class of coins, sooner than two years from the introduction of corresponding Burma coins, as the Governor of Burma may determine, or for such shorter period or periods as may be agreed between the Governor of Burma and the Bank, and thereafter shall continue to be accepted at par at such places and for such further period or periods as may be specified by the Governor of Burma after consultation with the Bank:

Provided that India rupee coin shall not cease to be legal tender in Burma as aforesaid so long as under the provisions of this Part of this Order the Bank is bound to issue such coin on demand in Burma in exchange for legal tender notes.

(2) No Burma coins shall be issued except in pursuance of an Act of the Legislature, and so long as under the provisions of this Part of this Order the Bank is bound to issue India rupee coin on demand in Burma in exchange for legal tender notes, no Burma coins shall be issued of the same value as, or of greater value than, the India rupee.

(3) Any Burma coins issued shall on demand be supplied by the Governor of Burma to the Bank against payment of their nominal value in such quantities as will, in the opinion of the Bank, be required for circulation in Burma, and the Governor of Burma shall not put any coins into circulation in Burma except through the Bank in pursuance of a demand made under this sub-paragraph.

The Bank may deliver to the Governor of Burma any Burma coins which will not in its opinion be required for circulation in Burma against payment of their nominal value, and no Burma coins shall be disposed of by the Bank otherwise than for the purposes of circulation or by delivery to the Governor of Burma under this sub-paragraph.

(4) It shall be the duty of the Governor of Burma to send as soon as may be to the Governor-General notice of any proposal to introduce any Burma coins.

11. (1) Until the Governor of Burma otherwise determines, the Bank shall on demand issue India rupee coin in exchange for legal tender notes.

(2) The Bank shall on demand issue legal tender notes in exchange for legal tender coins.

(3) The Bank shall in exchange for legal tender notes of five rupees or upwards supply legal tender notes of lower value or legal tender coins in such quantities as may in the opinion of the Bank be required for circulation.

(4) If the Governor-General or, as the case may be, the Governor of Burma, at any time fails to supply coins to the Bank, the Bank shall be released from its obligations under this paragraph to supply such coins to the public.

12. Gold coins, coined at His Majesty's Royal Mint in England or at any mints established in pursuance of a proclamation of His Majesty as a branch of His Majesty's Royal Mint, shall not be legal tender in Burma, but such coins shall be received by the Bank at its offices, branches and agencies in Burma at the bullion value of such coins calculated at the rate of 8·47512 grains troy of fine gold per rupee.

13. The Indian Coinage Act, 1906, shall, until other provision is made by the Act of the Legislature, have effect in Burma subject to the adaptations and modifications specified in Part I of the First Schedule to this Order and the enactments specified in Part II of that Schedule shall cease to have effect as part of the law of Burma:

Provided that nothing in this paragraph shall be construed as affecting the operation of any provision of this Part of this Order relating to the extent to which and the conditions subject to which India coins are to be legal tender in Burma.

Duties of Bank as to Exchange.

14. (1) The Bank shall sell to any person who makes a demand in that behalf at its office in Rangoon, and pays the purchase price in legal tender currency, sterling for immediate delivery in London at a rate not below one shilling and five pence and forty-nine sixty-fourths of a penny for a rupee:

Provided that no person shall be entitled to demand to buy an amount of sterling less than ten thousand pounds.

(2) The Bank shall buy from any person who makes a demand in that behalf at its office in Rangoon sterling for immediate delivery in London at a rate not higher than one shilling and six pence and three-sixteenths of a penny for a rupee:

Provided that—

(*a*) no person shall be entitled to demand to sell an amount of sterling less than ten thousand pounds;

(*b*) no person shall be entitled to receive payment unless the Bank is satisfied that payment of the sterling has been made in London.

(3) The Bank shall provide any person who makes a demand in that behalf with remittance between its office in Rangoon and such office or offices in India as may be prescribed by the Central Board, in such amounts, at such fixed rate of exchange and subject only to such rate or rates of commission, as may be approved by the Governor-General and the Governor of Burma:

Provided that so long as the Bank is bound under this Part of this Order to issue on demand India rupee coin in exchange for legal tender notes, the rate of exchange shall be par.

Control of Scheduled Banks, etc.

15. (1) Every Burma scheduled bank as defined in this paragraph shall maintain with the Bank a balance, the amount of which shall not at the close of business on any day be less than five per cent. of the demand liabilities, and two per cent. of the time liabilities, of that bank in Burma as shown in the latest return made under sub-paragraph (2) of this paragraph.

For the purpose of this paragraph the liabilities of a Burma scheduled bank do not include its paid-up capital or reserves or any credit balance in its profit and loss account or the amount of any loan taken by it from the Bank.

(2) Every Burma scheduled bank shall send to the Bank a return signed by two responsible officers of the scheduled bank showing—

(*a*) the amounts of its demand and time liabilities respectively in Burma,

(*b*) the total amount held in Burma in India notes and Burma notes respectively,

(*c*) the amounts held in Burma in India rupee coin, India subsidiary coin and Burma coin respectively,

(*d*) the amounts of advances made and of bills discounted in Burma respectively, and

(*e*) the balance held at the Bank,

at the close of business on each Friday, or where a Friday is a public holiday under the Negotiable Instruments Act, 1881, at the close of business on the preceding working day, and the return shall be sent not later than two working days after the date to which it relates:

Provided that where the Bank is satisfied that the furnishing of a weekly return under this sub-paragraph is impracticable in the case of any Burma scheduled bank by reason of the geographical position of that bank and its branches, the Bank may require that bank to furnish, in lieu of a weekly return, a monthly return to be dispatched not later than fourteen days after the end of the month to which it relates, giving the details specified in this sub-paragraph in respect of that bank at the close of business for the month.

(3) If at the close of business on any day before the day fixed for the next return the balance held at the Bank by any Burma scheduled bank is below the minimum prescribed in sub-paragraph (1) of this paragraph, that bank shall be liable to pay to the Bank in respect of each such day penal interest at the rate of three per cent. above the bank rate on the amount by which the balance with the Bank falls short of the prescribed minimum, and if on the day fixed for the next return the balance is still below the prescribed minimum as disclosed by this return, the rate of penal interest shall be increased to a rate five per cent. above the bank rate, in respect of that day and each subsequent day on which the balance held at the Bank at the close of business on that day is below the prescribed minimum.

(4) Any Burma scheduled bank failing to comply with the provisions of sub-paragraph (2) of this paragraph shall be liable to pay to the Bank a penalty of one hundred rupees for each day during which the failure continues.

(5) The penalties imposed by sub-paragraphs (3) and (4) of this paragraph shall be payable on demand made by the Bank and, in the event of a refusal by the defaulting bank to pay on such a demand, may be levied by a direction of the High Court; but such a direction shall be given only upon application made in that behalf to the Court by the Bank with the previous sanction of the Governor of Burma.

(6) In this paragraph "Burma scheduled bank" means a bank for the time being included in the Second Schedule to this Order; and the Governor of Burma shall, by notification in the Gazette of Burma, direct the inclusion in the said Schedule of any bank not already included therein which carries on the business of banking in Burma, and which—

(*a*) has a paid-up capital and reserves of an aggregate value of not less than five lakhs of rupees, and

(*b*) is a company as defined by section two of the Indian Companies Act, 1913, or a corporation or a company incorporated by or under any law in force in any place outside Burma,

and shall by a like notification direct the exclusion from the said Schedule of any Burma scheduled bank, the aggregate value of whose paid-up capital and reserves becomes at any time less than five lakhs of rupees, or which goes into liquidation or otherwise ceases to carry on banking business:

Provided that no bank shall be included in the said Schedule if it is a scheduled bank within the meaning of the Reserve Bank Act.

(7) The Governor of Burma may at any time by notification in the Gazette of Burma amend the Second Schedule to this Order for the purpose of correcting any misdescription of any bank.

16. (1) The Bank may require any Burma co-operative bank with which it has transactions under section seventeen of the Reserve Bank Act to furnish such returns as are referred to in sub-paragraph (2) of the last preceding paragraph, and while such a requirement is in force the provisions of sub-paragraphs (4) and (5) of that paragraph shall apply so far as may be to that co-operative bank as if it were a Burma scheduled bank.

(2) In this Part of this Order "Burma co-operative bank" means—

(*a*) the principal society in Burma which is registered or deemed to be registered under the Co-operative Societies Act, 1912, and of which the primary object is the financing of the other societies in Burma which are or are deemed to be so registered;

(*b*) any other central co-operative society declared for the time being by the Governor of Burma to be a Burma co-operative bank for the purposes of this Part of this Order.

Miscellaneous.

17.—(1) The Bank shall not be liable for the payment of any stamp duty in Burma in respect of Burma notes or India notes.

(2) The Bank shall not be liable to pay Burman income-tax or super-tax on any of its income, profits or gains:

Provided that nothing in this sub-paragraph shall affect the liability of any shareholder in respect of Burman income-tax or super-tax.

(3) For the purposes of any provisions of the Indian Income-tax Act, 1922, as in force in Burma, which relate to the levy and refund of income-tax, any dividends paid under section forty-seven of the Reserve Bank Act shall be deemed to be "interest on securities".

18.—(1) The Reserve Bank Act shall cease to be part of the law of Burma, and the status of the Bank shall be that of a corporation existing only by virtue of the law of British India and capable of suing and being sued as such in Burma; and accordingly effect shall be given to the said Act by courts in Burma only in so far as, under the rules and principles of law determining the cases in which law other than Burma law is to be applied in Burma, the proper law to be applied is the law of India.

(2) Nothing in the Indian Companies Act, 1913, shall apply to the Bank.

(3) Nothing in this paragraph shall—

(*a*) revive in Burma the enactments repealed by the Reserve Bank Act;

(*b*) affect, as respects Burma, the amendment made in section eleven of the Indian Companies Act, 1913, by section sixty-one of the Reserve Bank Act.

19.—(1) If any person in Burma makes a false statement in any declaration furnished by him in pursuance of a requisition under sub-section (1) of section fifty-six of the Reserve Bank Act, he shall be deemed in Burma to have committed the offence of giving false evidence defined in section one hundred and ninety-one of the Indian Penal Code and shall be punishable under the second paragraph of section one hundred and ninety-three of that Code.

(2) Nothing contained in any declaration furnished under the said sub-section (1) shall operate to affect the Bank with notice of any trust, and no notice of any trust expressed, implied or constructive shall be receivable by the Bank.

20. References in this Part of this Order to the Central Board shall, in the event of the supersession of that Board under section thirty of the Reserve Bank Act, be construed as references to the agency to which the general superintendence and direction of the affairs of the Bank are entrusted under that section.

21.—(1) Subject to the provisions of this paragraph, this Part of this Order shall cease to have effect on the expiration of two years from the date on which a notice determining the operation thereof is given to the Governor-General by the Governor of Burma or to the Governor of Burma by the Governor-General, so, however, that no such notice shall be given before the thirty-first day of March, nineteen hundred and thirty-eight:

Provided that, if in the opinion of the Governor of Burma the Bank fails to fulfil any of the obligations imposed upon it by this Part of this Order, or if the Reserve Bank Act is amended in any manner which in the opinion of the Governor of Burma is seriously prejudicial to the interests of Burma, the Governor may give notice to the Governor-General determining the operation of this Part of this Order at any time, and that notice shall take effect on such date as may be specified therein.

(2) The expiration of this Part of this Order shall not revive any enactment which has ceased to be in force as part of the law of Burma and shall not affect the provisions of this Part of this Order declaring that the status of the Bank is to be that of a corporation existing by virtue of the law of British India and declaring the extent to which effect is to be given by courts in Burma to the Reserve Bank Act.

PART III.

Provisions to have effect as part of the Law of British India.

1. Until other provision is made by any Act of the Indian Legislature or the Federal Legislature, the Reserve Bank Act shall have effect in British India subject to the adaptations and modifications specified in the Third Schedule to this Order.

2. While Part II of this Order remains in force, it shall be the duty of the Governor-General to send as soon as may be to the Governor of Burma notice of any proposal to introduce, or move an amendment to, a Bill in the Indian Legislature or the Federal Legislature which affects the coinage or currency of British India or the Federation or the constitution or functions of the Bank.

PART IV.

Adjustments between Governments, etc., and other Miscellaneous Provisions.

Interpretation of Part IV.

1.—(1) In this Part of this Order, unless the context otherwise requires—

"note ratio fraction" for a specified period means the fraction of which the denominator is the average amount of the India notes and Burma notes shown as being in circulation in the weekly accounts of the Bank relating to dates falling within that period, and the numerator is the average amount of the Burma notes shown as being in circulation by those accounts;

"the appropriate fraction" means, in relation to the transitional period, the note ratio fraction for the last year of that period and, in relation to any subsequent financial year, the note ratio fraction for that year;

"Governor-General's bank profits" in relation to any period means the sum of—

(a) any amounts paid in that period to the Governor-General by the Bank under section forty-seven, or sub-section (2) of section thirty-seven, of the Reserve Bank Act, and by the Issue Department under sub-section (2) of section thirty-four of that Act, and

(b) any other profits accruing in that period to the Governor-General by reason of any revaluation of the gold held by the Bank,

less any amount debited to the Governor-General in that period under sub-section (2) of the said section thirty-four;

"silver proceeds" and "silver deficiency" in relation to any period mean the amount by which the net receipts of the Governor-General for that period from sales of silver exceed or, as the case may be, fall short of the sums expended by him for that period on purchases of silver, and for the purposes of this definition any transfer of India rupee coin under section thirty-six of the Reserve Bank Act shall be deemed to be a purchase or sale, as the case may be;

"gold" and "silver" mean respectively gold coin and gold bullion and silver coin and silver bullion;

"the Burma debt to India" means any liabilities imposed on the revenues of Burma under section one hundred and thirty-four of the Burma Act;

"the transitional period" means the first three financial years after separation:

Provided that if it appears to the Governor of Burma at the end of the said three years that India notes are still returning from circulation in Burma to a considerable extent, the Governor of Burma may, within one month after the end of the said three years, give notice to the Governor-General that the transitional period is to continue and it shall continue accordingly until the end of the financial year in which in the opinion of the Governor of Burma the amount of India notes returning from circulation in Burma has become negligible.

(2) If, during the transitional period or during a financial year, either of the following events occurs, that is to say—

(a) Part II of this Order expires, or

(b) Burma coins intended to supersede India rupee coin in Burma are put into circulation,

then, for the purposes of any provision of this Order relating to, or coming into effect on the expiration of, a period which ceases on the happening of that event, any reference in this Part of this Order to the transitional period or to that year shall be construed as a reference to so much thereof as precedes the happening of the event.

(3) For the purpose of computing the silver proceeds or the silver deficiency for any period, the Governor-General shall, in respect of any silver sold by him in India, be taken to have received either—

(*a*) the rupee equivalent at the rate of exchange of the day of the London price of silver at the time when the contract was made, after deducting any brokerage and other charges or rebates actually incurred by the Governor-General in effecting the sale, or

(*b*) the actual sum received by him after deduction of any such brokerage and other charges or rebates and of any import duty on silver in force at the time when the contract was made,

whichever is the greater.

References in this sub-paragraph to the date when the contract was made shall, in relation to rupee coin delivered to the Bank under sub-section (2) of section thirty-six of the Reserve Bank Act, be construed as references to the date of the delivery of the coin.

Division of Governor-General's Bank Profits during the currency of Part II.

2.—(1) This paragraph shall have effect in relation to the period during which Part II of this Order is in force.

(2) At the end of the transitional period and of each subsequent financial year there shall be paid by the Governor-General to the Government of Burma the appropriate fraction of the Governor-General's bank profits for that period, or, as the case may be, that year.

(3) During the transitional period, the Governor-General shall pay to the Government of Burma the following sums on account—

(*a*) at the end of the first year, a sum ascertained by applying to the Governor-General's bank profits for that year the note ratio fraction for the last month thereof;

(*b*) at the end of the second year, such sum as will, with the previous payment on account, amount to a sum ascertained by applying to the Governor-General's bank profits for the first two years the note ratio fraction for the last month of the second year,

and so on at the end of each year except the last year.

(4) Notwithstanding anything in this paragraph, so much of any sums payable to the Government of Burma thereunder as is ascribable to dealings by the Bank in gold or the revaluation of the Bank's holding of gold shall in lieu of being paid to the Government of Burma be credited as a capital payment in reduction of the Burma debt to India; and if in any financial year subsequent to the transitional period the proportion of the Governor-General's bank profits which is ascribable to dealings by the Bank in gold or the revaluation of the Bank's holding of gold is, in the opinion of the Governor-General or the Governor of

Burma, exceptionally large, the Governor-General or the Governor, as the case may be, may, within one month after the end of the year, require that the amount to be credited under this sub-paragraph at the end of that year shall be computed by applying to the Governor-General's bank profits for that year the note ratio fraction for such period as may be agreed by the Governor-General and the Governor of Burma, or as may, in default of agreement, be determined by arbitration.

Division of Silver Proceeds and Silver Deficiencies pending the supersession of India rupee coin in Burma.

3.—(1) This paragraph shall have effect in relation to the period beginning on separation and ending on the expiration of Part II of this Order or on the putting into circulation of Burma coins which are intended to supersede India rupee coin in Burma, whichever first occurs.

(2) At the end of the transitional period and of each subsequent financial year there shall be credited as a capital payment in reduction of the Burma debt to India an amount equal to the appropriate fraction of the silver proceeds for that period or, as the case may be, that year.

(3) During the transitional period there shall be credited as capital payments in reduction of the said debt the following sums on account of the reduction provided for by the last preceding sub-paragraph—

(*a*) at the end of the first year, a sum ascertained by applying to the silver proceeds for that year the note ratio fraction for the last month thereof;

(*b*) at the end of the second year, such sum as will with the sum previously credited on account amount to a sum to be ascertained by applying to the silver proceeds for the first two years the note ratio fraction for the last month of the second year,

and so on at the end of each year except the last year.

(4) If in any financial year subsequent to the transitional period the silver proceeds are, in the opinion of the Governor-General or the Governor of Burma, exceptionally large, the Governor-General or the Governor, as the case may be, may, within one month after the end of the year, require that the amount to be credited under this paragraph at the end of that year shall be computed by applying to the silver proceeds for that year the note ratio fraction for such period as may be agreed by the Governor-General and the Governor of Burma or as may, in default of agreement, be determined by arbitration.

(5) If there is a silver deficiency for the transitional period or for any year or years comprised therein or for any year subsequent thereto, the foregoing provisions of this paragraph shall apply in relation to that deficiency as they apply in relation to silver proceeds, except that a debit on capital account shall be made to the Government of Burma in relation to the Burma debt to India instead of a credit, and that, if the deficiency is for the transitional period or for any year or years comprised therein, the provisions of sub-paragraph (3) of this paragraph shall have effect with such other adaptations as are necessary to secure that, in computing the credits and debits made during and at the end of the transitional period, due account is taken of the credits and debits previously made during that period.

Division of the Profit and Loss on the circulation of Nickel and Bronze Coins pending the supersession of India nickel and bronze coins in Burma.

4.—(1) This paragraph shall have effect in relation to the period beginning on separation and ending on the expiration of Part II of this Order or on the putting into circulation of Burma coins which are intended to supersede the India nickel and bronze coins in Burma, whichever first occurs.

(2) At the end of each financial year there shall be paid by the Governor-General to the Government of Burma the profit, as calculated by the Auditor-General of India, on the net amount of the India nickel and bronze coins which are actually passed into circulation in Burma during that year, less the loss, as calculated by the Auditor-General of India, on the destruction of any India nickel and bronze coins returned from Burma to the Indian Mints in that year and destroyed as not being fit for re-issue.

(3) If in any financial year the amount of India nickel and bronze coins returning from circulation in Burma exceeds the amount of India nickel and bronze coins actually passed into circulation in Burma in that year, the Government of Burma shall pay to the Governor-General the loss attributable to that fact, as calculated by the Auditor-General of India, together with the loss, as calculated by the Auditor-General of India, on the destruction of any India nickel and bronze coins returned from Burma to the Indian Mints in that year and destroyed as not being fit for re-issue.

Division of Silver Stocks on the supersession of India rupee coin in Burma.

5. On the expiration of the period in relation to which paragraph three of this Part of this Order has effect, the Governor-General shall transfer to the Government of Burma a proportion of his stocks of silver to be determined by applying thereto either—

(*a*) if the transitional period was still current on the day before this paragraph takes effect, the appropriate fraction for the transitional period; or

(*b*) in any other case, the appropriate fraction for the financial year current on that day:

Provided that if within one month after that day, either the Governor-General or the Governor of Burma so requires, the fraction to be applied shall be the note ratio fraction for such period as may be agreed between the Governor-General and the Governor of Burma or as may, in default of agreement, be determined by arbitration.

Disposal of Retired India Coins, and Burma's Share of the Silver Stocks.

6.—(1) Any India coins retired from Burma (whether from circulation, from the Bank's balances, from Treasury balances or from small

coin depots) by reason of the introduction of corresponding Burma coins shall be disposed of as follows—

(a) if and so far as the Governor of Burma so desires and the Mints in India are able to undertake the work, they shall be recoined with Burma designs at the Mints in India free of charge, except that any additional expense arising from a material alteration in the numbers and composition of the coins shall be defrayed by the Government of Burma;

(b) any India subsidiary coin not so recoined shall be delivered to the Governor-General against payment to the Government of Burma of its bullion value increased by an amount representing the cost to India of coining the same amount of coin in the same form;

(c) any India rupee coin not so recoined shall not be disposed of as coin, but the silver content thereof shall be disposed of in such manner as the Governor of Burma may think fit:

Provided that the Governor shall not dispose by sale of any such silver before the first day of January, nineteen hundred and thirty-eight, otherwise than in accordance with an agreement to be concluded with the Governor-General which shall, among other things, determine, by reference to the respective stocks of silver held by the parties to the agreement, the maximum amounts to be sold by them respectively in any year.

(2) Sub-paragraph (1) of this paragraph shall apply in relation to India rupee coin transferred to the Government of Burma under the last preceding paragraph as it applies to retired India rupee coin, and shall apply in relation to silver bullion so transferred as it applies in relation to retired India rupee coin which is not recoined in India thereunder.

Division of Assets and Liabilities on expiration of Part II.

7.—(1) On the expiration of Part II of this Order, the provisions of this paragraph shall take effect except so far as may be otherwise agreed between the Governor-General and the Governor of Burma, or, as the case may be, between the Governor of Burma and the Bank.

(2) The Bank shall be absolved from all liability in respect of Burma notes and the revenues of Burma shall be liable in respect thereof, and any guarantee thereof of the Government of India shall be deemed to be a guarantee of the Government of Burma; and there shall be transferred from the Issue Department of the Bank to the Government of Burma assets which, as valued for the purposes of the Reserve Bank Act, have together a value equal to the total liability in respect of the Burma notes outstanding on the expiration of the said Part II other than any notes which are deemed for the purposes of this sub-paragraph to have gone out of circulation.

For the purposes of this and the next succeeding sub-paragraph a note shall be deemed to have gone out of circulation if and only if on the expiration of the said Part II forty years or more have elapsed since the end of the financial year in which it was issued.

(3) India notes which were immediately before the expiration of Part II of this Order legal tender in Burma or in respect of which legal rights of encashment in Burma existed immediately before that date shall be accepted by the Governor of Burma at par at such places and for such period or periods as may be specified by the Governor of Burma after consultation with the Bank; and there shall from time to time on the demand of the Governor of Burma be transferred from the Issue Department of the Bank to the Government of Burma assets which, as valued for the purposes of the Reserve Bank Act, have together a value equal to the amount of the notes accepted by the Governor of Burma under this sub-paragraph, other than notes which are deemed for the purposes of this sub-paragraph to have gone out of circulation.

(4) Any assets transferred under this paragraph shall include gold, sterling securities, India rupee coin and rupee securities in the proportions in which assets of those classes respectively were, immediately before the expiration of Part II of this Order, held by the Issue Department of the Bank:

Provided that unless the Governor of Burma otherwise agrees—

(*a*) the securities so transferred shall not include any trade bills originating in India;

(*b*) the total amount of rupee trade bills and the total amount of sterling trade bills transferred shall not bear to the total amount of the securities transferred a greater proportion than the total amount of the rupee trade bills, or, as the case may be, the sterling trade bills held immediately before the expiration of the said Part II in the Issue Department bears to the total amount of the securities then held therein.

In this paragraph "securities" includes trade bills, and "rupee securities" and "rupee trade bills" include respectively securities and trade bills expressed in the standard monetary unit of Burma, whether or not that unit is still the Indian rupee.

(5) Any India rupee coin transferred under the foregoing provisions of this paragraph shall be disposed of in accordance with the provisions of the last preceding paragraph as if it were retired rupee coin.

(6) If and in so far as distinctive Burma coins have not previously been introduced, they shall forthwith be introduced and all India coins shall, as soon as may be, be retired from Burma and disposed of in accordance with the provisions of the last preceding paragraph:

Provided that India coins shall continue to be accepted at par at such places in Burma and for any such further period or periods as may be specified by the Governor of Burma.

(7) The Governor of Burma shall, if the Bank so desires, take over from the Bank all or any of the property held by the Bank in Burma for the purpose of carrying on its business, against payment of the value of that property as shown in the books of the Bank if Part II of this Order expires at or before the expiration of three years from separation, or, if the said Part II expires at a later date, on such terms as may be agreed with the Bank, or, in default of agreement, decided by arbitration.

(8) If the agreement made between the Bank and the Imperial Bank in pursuance of section forty-five of the Reserve Bank Act is still in force, the Governor of Burma and the Bank shall enter into separate agreements with the Imperial Bank which shall be in substitution for the said agreement but without prejudice to rights acquired or liabilities incurred prior thereto

The agreements so to be made shall be such as together to secure as nearly as may be that the Imperial Bank continues to act in relation to Government business and currency operations in India and Burma in the like manner, for the like period and on not less favourable conditions as if Part II of this Order had not expired, and if the Governor of Burma, the Bank and the Imperial Bank are not able to agree upon the terms of the said agreements, the terms thereof shall be such as may be decided by arbitration:

Provided that the agreement so to be made between the Governor of Burma and the Imperial Bank shall be such as to secure that if in the opinion of the Governor of Burma the Imperial Bank has failed either to fulfil its duties which it owes to the Governor of Burma in relation to the conduct of Government business and currency operations in Burma or to maintain a sound financial position, the Governor may issue instructions to the Imperial Bank with reference either to the rights acquired by the Governor under the agreement or to any matter which in the opinion of the Governor involves the security of the Government moneys in the custody of the Imperial Bank, and in the event of the Imperial Bank disregarding those instructions may terminate the relationship between him and the Imperial Bank.

(9) There shall be credited as a capital payment in reduction of the Burma debt to India an amount calculated as follows—

(*a*) the surplus assets of the Bank (including the Reserve Fund) shall be valued as on the day immediately preceding the expiration of Part II of this Order;

(*b*) there shall be deducted from the value as so ascertained the sums payable in respect of the financial year current on that day to the Governor-General and the shareholders of the Bank;

(*c*) the amount to be credited shall be ascertained by applying to the difference either—

(i) if the transitional period was still current on the day immediately preceding the expiration of Part II of this Order, the appropriate fraction for the transitional period, or

(ii) in any other case, the appropriate fraction for the financial year current on that day:

Provided that if within one month after that day either the Governor-General or the Governor of Burma so requires, the fraction to be applied to the said difference shall be the note ratio fraction for such period as may be agreed between the Governor-General and the Governor, or as may, in default of agreement, be determined by arbitration.

Provisions as to Agreements and Arbitrations.

8. The Governor-General, the Governor of Burma and the Reserve Bank may, as respects the rights and liabilities conferred and imposed on them respectively by the preceding provisions of this Part of this Order, agree on the substitution for any of the said provisions of such other provisions as may be specified in the agreement; and if in the opinion of the Governor-General or the Governor of Burma unforeseen developments have rendered any of the said provisions inequitable the Governor-General or, as the case may be, the Governor, may, in default of such agreement as aforesaid, require the question whether, and if so what, provisions should be substituted for the provisions aforesaid to be referred to arbitration, and in the event of any such arbitration effect shall be given to the award of the arbitrator accordingly.

9. Any dispute arising under this Part of this Order between the Governor-General and the Governor of Burma shall be decided by arbitration.

10.—(1) Any matter which under this Part of this Order is to be decided by arbitration shall be referred to and decided by such person as may be agreed upon by the parties to the dispute or as may, in default of agreement, be appointed by the Secretary of State.

(2) The Arbitration Act, 1889, shall not apply to any such arbitration.

Miscellaneous.

11. The agreement made in pursuance of section forty-five of the Reserve Bank Act between the Bank and the Imperial Bank of India shall have effect subject to the following adaptations—

(*a*) references to India and British India shall be construed as including references to Burma and British Burma;

(*b*) references to the Governor-General in Council in relation to his general banking business, his accounts, and sums due to or from him, and references to Government in relation to receipts and disbursements dealt with on account of Government shall be construed as including references to the Governor of Burma (both in his dealings with the revenues of Burma and in his dealings with the Federal Fund of the Federated Shan States) and the Burma Railway Board;

(*c*) references to banks included in the Second Schedule to the Reserve Bank Act shall be construed as including references to Burma scheduled banks.

M. P. A. Hankey.

FIRST SCHEDULE.

ADAPTATION AND REPEAL AS RESPECTS BURMA OF INDIAN ENACTMENTS RELATING TO COINAGE.

PART I.

Adaptations and Modifications of the Indian Coinage Act, 1906.

The title and preamble shall be omitted.

In section one, for the words "the Indian Coinage Act, 1906" there shall be substituted "the Burma Coinage Act", and all words subsequent to those words shall be omitted.

In section two, paragraphs (*b*) and (*d*) shall be omitted; and for paragraph (*c*) there shall be substituted the following paragraph

'(*c*) "prescribed" means prescribed by the Indian Coinage Act, 1906, as in force immediately before the separation of Burma from India, or by the rules then in force thereunder;'

Sections three to fifteen A shall be omitted.

In sections sixteen and twenty, for the words "under the authority of the Governor-General in Council" there shall be substituted the words "under the authority of the Governor-General of India or the Governor-General of India in Council", and for the words "by the Governor-General in Council or by the Local Government" there shall be substituted the words "by the Governor".

For section twenty-one there shall be substituted the following section:—

"Power to make rules.

21. (1) The Governor may make rules to carry out the purposes and objects of this Act and of the provisions of Part II of the India and Burma (Burma Monetary Arrangements) Order, 1937, and in particular and without prejudice to the generality of the foregoing power such rules may provide for the guidance of persons authorised to cut or break coin under sections sixteen and twenty of this Act.

(2) Every such rule shall be published in the Gazette and on such publication shall have effect as if enacted in this Act."

Sections twenty-three and twenty-four shall be omitted.

PART II.

Enactments repealed.

The Native Coinage Act, 1876.

The Indian Coinage (Amendment) Act, 1918.

The Bronze Coin (Legal Tender) Act, 1918.

Sections one to five of the Indian Coinage (Amendment) Act, 1919.

The Indian Coinage (Amendment) Act, 1924.

SECOND SCHEDULE.

Burma Scheduled Banks.

Bank of Upper Burma.

U Rai Gyaw Thoo and Company, Akyab.

Messrs. Balthazar and Son.

The Overseas-Chinese Banking Corporation.

THIRD SCHEDULE.

ADAPTATIONS AND MODIFICATIONS OF THE RESERVE BANK ACT.

General.

Throughout the Act, for the words "Governor-General in Council", wherever they occur, there shall be substituted the words "Central Government".

Section two.

In paragraph (*c*) for the words "Local Government" there shall be substituted the words "Provincial Government".

In paragraph (*d*) after the words "legal tender" there shall be inserted the words "in British India" and the word "and" shall be omitted.

After paragraph (*e*) there shall be added the following paragraphs:—

'(*f*) "Burma scheduled bank", "Burma co-operative bank" and "Burma notes" have the same meanings as in Part II of the India and Burma (Burma Monetary Arrangements) Order, 1937;

(*g*) "bank notes" and "currency notes of the Government of India" do not, save as is expressly provided, include any notes which are Burma notes;

(*h*) "local authority" includes a local authority in Burma;

(*i*) "Burma" has the same meaning as in the Government of India Act, 1935;

(*j*) "Burman subject of His Majesty" includes all British subjects domiciled in Burma; and

(*k*) references to the Government of Burma include references to the Governor of Burma in his dealings with the Federal Fund of the Federated Shan States.'

Section four.

In sub-section (3)—

(i) after the words "has his principal place of business in India", the words "domiciled in India", the words "a State in India", and the words "ordinarily resident in India" there shall be inserted the words "or Burma";

(ii) for the words "an Indian subject of His Majesty" there shall be substituted the words "an Indian or Burman subject of His Majesty";

(iii) for the words "Indian subjects of His Majesty" (in both places where they occur) there shall be substituted the words "Indian or Burman subjects of His Majesty";

(iv) after the words "having a branch in British India" there shall be inserted the words "or in Burma";

(v) after paragraph (*c*) there shall be inserted the following words:—

"or

(*d*) a company or co-operative society registered in Burma under any law relating to companies or co-operative societies, or a Burma scheduled bank,"

In sub-section (4), after the word "Indian" there shall be inserted the words "or Burman".

In sub-section (10), for the word "him" there shall be substituted the word "Government".

Section six.

After the word "India" there shall be inserted the words "or Burma".

Section ten.

After the word "India" in both places where it occurs there shall be inserted the words "or Burma".

Section eleven.

In sub-section (5), for the words "the Indian Legislature or of a local Legislature" there shall be substituted the words "the Federal Legislature, the Indian Legislature, a Provincial Legislature, the Coorg Legislative Council or the Burma Legislature". and after the words "any such Legislature" there shall be inserted the words "or Council".

Section fourteen.

In sub-section (1), after the words "at a place" there shall be inserted the words "in British India".

Section seventeen.

In paragraph (1), for the words "the Secretary of State in Council" there shall be substituted the words "the Secretary of State"; and for the words "Local Governments" there shall be substituted the words "the Federal Railway Authority, the Provincial Governments, the Government of Burma, the Burma Railway Board".

In paragraph (2) (*a*), for the words "drawn on and payable in India" there shall be substituted the words "drawn on India or Burma and payable in India or Burma"; and after the words "scheduled bank" there shall be inserted the words "or a Burma scheduled bank".

In paragraph (2) (*b*), for the words "drawn and payable in India" there shall be substituted the words "drawn either in India or in Burma and payable either in India or in Burma"; and for the words "or a provincial co-operative bank" there shall be substituted the words "a Burma scheduled bank, a provincial co-operative bank or a Burma co-operative bank".

In paragraph (2) (*c*), for the words "drawn and payable in India" there shall be substituted the words "drawn either in India or Burma and payable either in India or Burma"; after the words "a scheduled bank" there shall be inserted the words "or a Burma scheduled bank"; and for the words "the Government of India or a Local Government" there shall be substituted the words "the Central Government, a Provincial Government, or the Government of Burma".

In paragraph (3) (*a*), after the words "scheduled banks" there shall be inserted the words "and Burma scheduled banks".

In paragraph (3) (*b*), after the words "scheduled bank" there shall be inserted the words "or in Burma except with a scheduled bank or a Burma scheduled bank".

In paragraph (4), for the words "and provincial co-operative banks" there shall be substituted the words "Burma scheduled banks, provincial co-operative banks, and Burma co-operative banks"; after the words "British India" there shall be inserted the words "or Burma"; and for the words "or a provincial co-operative bank" there shall be substituted the words "Burma scheduled bank, provincial co-operative bank or Burma co-operative bank".

In paragraph (5), for the words "and to such Local Governments as may have the custody and management of their own provincial revenues" there shall be substituted the words "the Federal Railway Authority, Provincial Governments, the Government of Burma, and the Burma Railway Board".

In paragraph (8), for the words "of the Government of India or of a Local Government" there shall be substituted the words "of the Central Government, a Provincial Government, or the Government of Burma"; for the words "in British India or of such States in India" there shall be substituted the words "or such Indian States"; for the words "the Government of India, a Local Government, a local authority or State in India" there shall be substituted the words "any such Government, authority, or State".

In paragraph (11), for the words "the Secretary of State in Council" there shall be substituted the words "the Secretary of State"; for the words "or any Local Government or local authority or State in India" there shall be substituted the words "or any Provincial Government or the Government of Burma, or any local authority or any Indian State".

In paragraph (14), after the words "from any person in India" there shall be inserted the words "or Burma"; after the words "a scheduled bank" there shall be inserted the words "or a Burma scheduled bank"; and after the words "from any person outside India" and the words "from persons in India" there shall be inserted the words "and Burma".

In paragraph (15), after the words "this Act" there shall be inserted the words "and the making and issue of Burma notes in accordance with the law of Burma".

In paragraph (16), after the words "under this Act" there shall be inserted the words "and the law of Burma".

Section eighteen.

After the word "Indian" there shall be inserted the words "or Burman"; and for the words "or a provincial co-operative bank" there shall be substituted the words "a Burma scheduled bank, a provincial co-operative bank or a Burma co-operative bank".

Section twenty.

For the words "the Secretary of State in Council and the Governor-General in Council and such Local Governments as may have the custody and management of their own provincial revenues" there shall be substituted the words "the Secretary of State, the Central Government, the Provincial Governments".

Section twenty-one.

For the words "such Local Governments as may have the custody and management of their own provincial revenues" and for the words "Local Governments" there shall be substituted the words "the Provincial Governments"; for the words "Local Government", wherever they occur, there shall be substituted the words "Provincial Government"; and for the words "its local Legislature" there shall be substituted the words "the Provincial Legislature".

Section twenty-three.

At the end the following sub-section shall be added—

"(3) In this section, references to bank notes include references to Burma notes".

Section twenty-six.

At the end of the section there shall be inserted the following sub-section:—

"(3) Every Burma note shall be guaranteed by the Central Government".

Section twenty-eight.

At the end the following sub-section shall be added—

"(2) The provisions of sub-section (1) of this section, other than the proviso thereto, shall apply to Burma notes as they apply to bank notes; and refunds may be made as of grace in respect of Burma notes in accordance with the provision made in that behalf by the law of Burma".

Section twenty-nine.

After the word "note" there shall be inserted the words "or Burma notes".

Section thirty.

After the words "by or under this Act" there shall be inserted the words "or by or under the law of Burma"; and for the word "he" there shall be substituted the words "the Central Government".

Section thirty-three.

In sub-section (3) after the words "in British India" there shall be inserted the words "or in Burma".

Section thirty-four.

At the end, there shall be inserted the following sub-section—

"(3) In this section, references to bank notes include references to Burma notes".

Section thirty-six.

In sub-section (1), for the words "without his consent" there shall be substituted the words "without that Government's consent".

After section forty-one.

There shall be inserted the following section—

"Obligation to provide remittance between India and Burma.

41A. (1) The Bank shall provide any person who makes a demand in that behalf with remittance between its office in Rangoon and such office or offices in India as may be prescribed by the Central Board, in such amounts, at such fixed rate of exchange and subject only to such rate or rates of commission as may be approved by the Central Government and the Government of Burma:

Provided that so long as the Bank is bound under Part II of the India and Burma (Burma Monetary Arrangements) Order, 1937, to issue on demand India rupee coin in exchange for legal tender notes, the rate of exchange shall be par.

(2) Burma assets and liabilities of the bank or any scheduled bank shall be valued, for the purposes of this Act, at the rate of exchange so fixed or, as the case may be, at par".

Section forty-two.

In sub-section (1), after the word "India" there shall be inserted the words "and Burma".

In sub-section (2), for paragraphs (*a*) to (*e*) there shall be substituted the following paragraphs—

"(*a*) the amounts of its demand and time liabilities, respectively, in India,

(*b*) the amounts of its demand and time liabilities, respectively, in Burma,

(*c*) the total amount held in India in currency notes of the Government of India and bank notes,

(*d*) the total amount held in India in Burma notes,

(*e*) the total amount held in Burma in currency notes of the Government of India and bank notes,

(*f*) the total amount held in Burma in Burma notes,

(*g*) the amounts held in India in rupee coin and subsidiary coin, respectively,

(*h*) the amounts held in Burma in rupee coin, subsidiary coin and Burma coin, respectively,

(*i*) the amounts of advances made and of bills discounted in India, respectively,

(*j*) the amounts of advances made and of bills discounted in Burma, respectively, and

(*k*) the balance held at the Bank,".

Section forty-three.

At the end there shall be inserted the words "and from Burma scheduled banks under the corresponding provisions of the law of Burma".

Section forty-five.

In sub-section (1), for the words "he thinks fit" there shall be substituted the words "it thinks fit", and for the words "in his opinion" there shall be substituted the words "in its opinion".

After sub-section (2) there shall be inserted the following sub-section:—

"(3) As from the commencement of Part III of the Government of India Act, 1935, references in the said agreement to the Governor-General in Council in relation to his general banking business, his accounts, and sums due to or from him, and references to Government in relation to receipts and disbursements dealt with on account of Government shall be construed as including references to the Provincial Governments and the Federal Railway Authority."

Section fifty-one.

For the words "he thinks fit" there shall be substituted the words "it thinks fit".

Section fifty-two.

In sub-section (1), for the words "by him" there shall be substituted the words "by that Government".

Section fifty-three.

For the words "the form set out in the Fifth Schedule or in such other" there shall be substituted the word "such".

Section fifty-four.

For the words "Local Governments" there shall be substituted the words "Provincial Governments, the Government of Burma"; and after the words "provincial co-operative banks" (in both places where those words occur) there shall be inserted the words "Burma co-operative banks".

Section fifty-seven.

In sub-section (1) for the words "he may direct" there shall be substituted the words "it may direct".

The First Schedule.

For the words "Burma, the Andaman and Nicobar Islands, Bawlake, Kantarawadi and Kyebogyi" there shall be substituted the words "Burma and the Andaman and Nicobar Islands".

The Second Schedule.

The following banks shall be omitted from the Schedule (without prejudice however to any power under the Act to restore them thereto)—

Bank of Upper Burma.
U Rai Gyaw Thoo and Company, Akyab.
Messrs. Balthazar and Son.
The Overseas-Chinese Banking Corporation.

The Third Schedule.

In paragraph two for the words "as he thinks fit" there shall be substituted the words "as it thinks fit".

The Fifth Schedule.

This Schedule shall be omitted.

THE GOVERNMENT OF INDIA (HIGH COURT JUDGES) ORDER, 1937.

AT THE COURT AT BUCKINGHAM PALACE,

The 18th day of March, 1937.

PRESENT:

THE KING'S MOST EXCELLENT MAJESTY IN COUNCIL.

Whereas by sub-section (1) of section two hundred and twenty of the Government of India Act, 1935 (hereafter in this Order referred to as "the Act") it is provided that the Judges appointed by His Majesty to any High Court in British India, together with any additional Judges appointed by the Governor-General under sub-section (3) of section two hundred and twenty-two of the Act, shall at no time exceed in number such maximum number as His Majesty in Council may fix in relation to that Court:

And whereas by section two hundred and twenty-one of the Act it is provided that the Judges of the several High Courts shall be entitled to such salaries and allowances, including allowances for expenses in respect of equipment and travelling upon appointment, and to such rights in respect of leave and pensions, as may from time to time be fixed by His Majesty in Council:

And whereas a draft of this Order has been laid before Parliament in accordance with the provisions of sub-section (1) of section three hundred and nine of the Act, and an address has been presented to His Majesty by both Houses of Parliament praying that an Order may be made in the terms of this Order:

Now, therefore, His Majesty, in exercise of the said powers and of all other powers enabling him in that behalf, is pleased by and with the advice of His Privy Council to order, and it is hereby ordered, as follows:—

Introductory.

1. This Order may be cited as "The Government of India (High Court Judges) Order, 1937", and shall come into operation on the first day of April, nineteen hundred and thirty-seven.

2. (1) In this Order, except where it is otherwise expressly provided or the context otherwise requires—

"High Court" means a court which is a High Court for the purposes of the Act;

"Chartered High Court" means a High Court other than a Chief Court or a Judicial Commissioner's Court;

"Chief Justice" includes a Chief Judge and a Judicial Commissioner;

"Judge" includes a Chief Justice, an acting Chief Justice an acting Judge, an additional Judge, a Judicial Commissioner, an acting Judicial Commissioner, an Assistant Judicial Commissioner, an acting Assistant Judicial Commissioner and an Additional Assistant Judicial Commissioner;

"acting Chief Justice" means a Judge appointed under sub-section (1) of section two hundred and twenty-two of the Act to perform the duties of a Chief Justice;

"acting Judge" means a person appointed under sub-section (2) of the said section to act as a Judge;

"additional Judge" means a person appointed under sub-section (3) of the said section to act as an additional Judge;

"actual service" includes—

(i) time spent by a Judge on duty as Judge, or in the performance of such other functions as he may be directed by the Governor-General or the Governor to discharge;

(ii) vacations, excluding any time during which the Judge is absent on leave; and

(iii) joining time on transfer from one High Court to another;

"service for pension" includes—

(i) actual service;

(ii) one month or the amount actually taken, whichever is less, of each period of leave on full allowances;

(iii) joining time on return from leave out of India;

(2) In the calculation of service for the purposes of this Order previous service at any date or dates as acting Judge or additional Judge shall be reckoned as service as Judge; but, save as expressly provided, previous service as acting Chief Justice shall not be reckoned as service as Chief Justice.

(3) Any period of leave taken by a Judge before the commencement of this Order under the rules then applicable to him as an acting Judge or additional Judge shall for the purposes of this Order be treated as if it were leave taken by him under this Order.

(4) The Interpretation Act, 1889, applies for the interpretation of this Order as it applies for the interpretation of an Act of Parliament.

Maximum Number of Judges.

3. The maximum number of Judges in each High Court shall be as specified in the First Schedule to this Order.

Expenses for Equipment and Voyage.

4. There shall be paid to a Judge who was permanently resident in Europe at the date of his appointment an allowance of five hundred pounds for expenses in respect of equipment and travelling on appointment.

Salaries.

5. There shall be paid to a Judge in respect of time spent on actual service salary at the rate specified in the Second Schedule to this Order.

Leave.

6. Subject to the provisions of this Order, leave granted to a Judge may be at his option either—

(*a*) leave on full allowances; or

(*b*) leave on half allowances; or

(*c*) leave partly on full allowances and partly on half allowances.

7. (1) A leave account in terms of leave on half allowances shall be kept for each Judge and in that account there shall be credited to him one-fourth of the time spent by him on actual service, and be debited to him all leave with allowances taken by him.

(2) For the purposes of this paragraph and of sub-paragraph (1) of the next succeeding paragraph, any period of leave on full allowances shall be reckoned as double that period of leave on half allowances.

8. (1) The aggregate amount of leave granted to a Judge during his whole period of service as such shall not exceed in terms of leave on half allowances three years.

(2) The aggregate amount of leave on full allowances granted to a Judge during his whole period of service as such shall not exceed one twenty-fourth of the period spent by him on actual service.

(3) The maximum period of leave granted at any one time shall be, in the case of leave on full allowances, five months, and, in the case of leave with allowances of any kind, sixteen months.

9. Subject to the provisions of sub-paragraph (1) of the preceding paragraph, leave on half allowances may be granted to a Judge in excess of the amount at his credit—

(i) on medical certificate; or

(ii) for not more than six months and not more than once during the whole period of his service as a Judge, otherwise than on medical certificate.

10. (1) The monthly rate of leave allowance payable to a Judge while on leave on full allowances shall be for the first month of such leave a rate equal to the monthly rate of his salary, and thereafter two thousand two hundred and twenty rupees if resident in Asia during his leave, and two hundred and twenty-two pounds if resident outside Asia.

(2) The monthly rate of leave allowance payable to a Judge while on leave on half allowances shall be one thousand one hundred and ten rupees if resident in Asia during his leave, and one hundred and eleven pounds if resident outside Asia.

11. There shall be payable to a Judge in respect of joining time on his return from leave out of India an allowance at the rate of one thousand one hundred and ten rupees a month in lieu of salary.

12. Extraordinary leave not exceeding six months in duration may be granted not more than once during the period of a Judge's service as such in excess of any leave permissible under the foregoing provisions of this Order, but no salary or allowances shall be payable during or in respect of such leave.

13. (1) A Judge may be allowed to combine vacation on full salary with leave, if—

(*a*) where the vacation consists of one continuous period, the leave is taken either at the commencement or at the end of the vacation but not at both;

(*b*) where the vacation is divided into two separate periods, the leave is taken for the interval, or part of the interval, between the two periods of that vacation, or for the interval, or part of the interval, between the second period of that vacation and the commencement of the next ensuing vacation.

(2) Permission to combine vacation with leave shall not be granted under this paragraph if it will be necessary to appoint an acting Judge during the period of the vacation.

14. If a Judge overstays his leave or any vacation, whether combined with leave or not, he shall receive no salary for the period of his absence in excess of the leave granted to him or beyond the end of the vacation, as the case may be:

Provided that, if such absence is due to circumstances beyond his control, the period thereof may be treated as leave and be debited to his leave account.

15. The power to grant, refuse, revoke or curtail leave shall be vested in the Governor of the Province in which the principal seat of the High Court is situate, exercising his individual judgment, after consultation with the Chief Justice.

Passages.

16. (1) A Judge who is a member of the Indian Civil Service shall have such rights in respect of passages for himself and his wife and children, if any, as under the rules of that Service he would have had if he had not been appointed a Judge, his service as Judge being treated as service for the purpose of determining those rights.

(2) Any other Judge whose domicile at the date of his appointment was elsewhere than in Asia shall have such rights in respect of passages for himself and his wife and children, if any, as, under the rules for the time being applicable to persons who became members of the Indian Civil Service on that date, he would have had if he had become a member thereof on that date and if his service as Judge were treated as service therein for the purpose of determining those rights;

Provided that

(i) if he has received an allowance for equipment and voyage on appointment he shall not be entitled to a passage (whether for himself, or his wife or children) until the completion of five years', nor to a second passage until the completion of ten years', total service as a Judge; and

(ii) if he dies while serving as a Judge, his wife and children shall not be entitled to any concession in respect of passages in addition to the gratuity for which provision is made in this Order.

Pensions.

17. (1) Subject to the provisions of this Order, a pension shall be payable to a Judge on his retirement if, but only if, either—

(*a*) he has completed not less than 12 years' service for pension; or

(*b*) he has completed not less than 7 years' service for pension and has attained the age of sixty; or

(*c*) he has completed not less than 7 years' service for pension and his retirement is medically certified to be necessitated by ill-health.

(2) The Secretary of State may for special reasons direct that any period not exceeding three months shall be added to a Judge's service for pension:

Provided that a period so added shall be disregarded in calculating any additional pension under Part I or Part II of the Third Schedule to this Order.

18. (1) Subject to the provisions of this Order, the pension payable to a Judge who on his retirement is entitled to a pension shall be calculated—

(*a*) in the case of a Chief Justice or Judge who is not a member of the Indian Civil Service, or of a Chief Justice of a Chartered High Court who is a member of the Indian Civil Service, in accordance with the scale and rules in Part I of the Third Schedule to this Order.

(*b*) in the case of a Judge who is a member of the Indian Civil Service and is not a Chief Justice of a Chartered High Court, in accordance with the scale and rules in Part II of the said Schedule.

19. (1) The provisions of this paragraph shall apply in relation to a Judge who is a member of a civil service of the Crown in India.

(2) If any such Judge is eligible for a pension under paragraphs 17 and 18 of this Order he shall elect to receive either that pension or such pension as is referred to in the next succeeding sub-paragraph.

(3) If any such Judge is not eligible for a pension under paragraphs 17 and 18 of this Order or, being eligible for such a pension elects not to receive that pension, the pension payable to him shall be—

(*a*) the pension for which he would have been eligible under the rules of his civil service if he had not been appointed a Judge, his service as a Judge being treated as service for the purpose of calculating that pension; and

(*b*) if he is not a member of the Indian Civil Service, a special additional pension of five hundred rupees per annum in respect of each completed year of service for pension in any one or more of the High Courts, but not in any case exceeding two thousand five hundred rupees per annum.

(4) The pension payable to any such Judge part of whose service includes service as a Chief Justice shall in no case be less than the pension for which he would have been eligible if all his service for pension had been service rendered otherwise than as Chief Justice.

20. The rules for the time being in force with respect to the grant of extraordinary pensions and gratuities and privileges in regard to special disability leave and passages to, or in respect of, members of the Indian Civil Service who may suffer injury or die as a result of violence shall apply in relation to a Judge, whether a member of a civil service or not, subject, however, to the modification that references in those rules to tables of injury gratuities and pensions and of family gratuities and pensions, shall be construed as references to the tables in the Fourth Schedule to this Order.

21. Pensions expressed in sterling only shall, if paid in India, be converted at such rate of exchange as the Secretary of State may from time to time prescribe:

Provided that nothing in this paragraph shall affect any specific privilege in respect of the conversion of sterling pensions which was conferred by any Rules previously in force on persons who on the 1st February, 1921, were members of a civil service of the Crown in India.

22. The Civil Pensions (Commutation) Rules applicable to persons appointed by the Secretary of State shall with any necessary modifications apply to Judges.

23. There shall be paid to the legal personal representatives of any Judge who dies while in possession of his office and who was at the time of his appointment permanently resident in Europe.

(*a*) if the death occurred more than six months after the date of his assumption of office a sum equal to six months' salary in addition to any salary due to the Judge at the date of his death; or

(*b*) if the death occurred within six months after his assumption of office or during his voyage to India for the purpose of first assuming office, such sum as with any amount received by or due to the Judge on account of salary will make up the amount of one year's salary.

24. Save as may be otherwise expressly provided in the relevant rules relating to the grant of extraordinary pensions and gratuities, the authority competent to grant pension to a Judge under the provisions of this Order shall be the Governor of the Province in which the High Court is situated, exercising his individual judgment.

Travelling Allowances.

25. A Judge shall receive such reasonable allowances to reimburse him for expenses incurred in travelling on duty in India and such reasonable facilities in connexion with travelling as the Governor of the Province in which the principal seat of the High Court is situated may from time to time in his individual judgment prescribe.

Subsidiary Conditions of Service.

26. Subject to the provisions of this Order and of any other Order in Council made under the Act, the conditions of service of a Judge shall be determined by the rules for the time being applicable to an officer of non-Asiatic domicile or, as the case may be, of Asiatic domicile appointed by the Secretary of State to a civil service of the Crown in India and holding the rank of Secretary to the Government of the Province in which the principal seat of the High Court is situated:

Provided that nothing in this paragraph shall have effect so as to give to a Judge who is a member of a civil service of the Crown in India less favourable terms in respect of any of his conditions of service than those to which he would be entitled as a member of his civil service if he had not been appointed a Judge, his service as Judge being treated as service for the purpose of determining those terms.

Provisions as to existing Judges.

27. (1) The foregoing provisions of this Order (other than paragraph three) shall not apply in relation to a Judge who—

(*a*) was serving as a Judge in India at the commencement of this Order; or

(*b*) was serving as a Judge in Burma at that date and is subsequently appointed to be a Judge in India.

(2) The conditions of service of any such Judge as aforesaid shall continue to be governed by the rules to which he was subject immediately before the commencement of this Order and, for the purposes of those rules, service by any such Judge as a Judge in Burma, whether before or after the said date, and leave taken by him during such service, shall be treated as service rendered in India and as leave taken during service so rendered.

(3) For the purposes of this paragraph a person who was serving as Acting Judge or additional Judge at the commencement of this Order shall be deemed to have been serving as a Judge at that date if, but only if, his service as such Acting Judge or additional Judge continued without interruption until his subsequent permanent appointment as Judge.

M. P. A. Hankey.

FIRST SCHEDULE.

(Paragraph 3.)

NUMBER OF JUDGES.

The maximum number of Judges in the several High Courts shall be as shown in the following table. In each case the number is exclusive of the Chief Justice, the Chief Judge or the Judicial Commissioner, but includes any additional Judges or additional Assistant Judicial Commissioners

Court.	*Maximum number.*
The High Court at Madras	15 Judges.
The High Court at Bombay	13 ,,
The High Court at Calcutta	19 ,,
The High Court at Allahabad	12 ,,
The High Court at Lahore	15 ,,
The High Court at Patna	11 ,,
The High Court at Nagpur	7 ,,
The Chief Court of Oudh	5 ,,
The Court of the Judicial Commissioner of Sind .	5 Assistant Judicial Commissioners.
The Court of the Judicial Commissioner of the North-West Frontier Province	2 ,,

SECOND SCHEDULE.

(Paragraph 5.)

SALARIES OF JUDGES.

Rank of Judge.	*Salary per annum.*
	Rs.
Chief Justice of the High Court at Calcutta	72,000
Chief Justice of the High Courts at Madras, Bombay, Allahabad, Patna and Lahore	60,000
Chief Justice of the High Court at Nagpur	50,000
Judge of the High Courts at Calcutta, Madras, Bombay, Allahabad, Patna and Lahore; Chief Judge of the Chief Court of Oudh	48,000
Judge of the Chief Court of Oudh; Judicial Commissioner of Sind	42,000
Judge of the High Court at Nagpur	40,000
Judicial Commissioner of the North-West Frontier Province ...	39,000
Assistant Judicial Commissioner of Sind or of the North-West Frontier Province	36,000

In this Schedule "Chief Justice", "Chief Judge" and "Judicial Commissioner" include respectively an acting Chief Justice, an acting Chief Judge and an acting Judicial Commissioner, "Judge" includes an acting or an additional Judge, and "Assistant Judicial Commissioner" includes an acting or additional Assistant Judicial Commissioner.

THIRD SCHEDULE.

(Paragraph 18.)

PENSIONS OF JUDGES.

PART I.

1. The provisions of this Part of this Schedule apply to a Chief Justice or Judge who is not a member of the Indian Civil Service and also to a Judge who is a member of that Service and is Chief Justice of a Chartered High Court.

2. The pension payable to such a Judge who has completed twelve years' service for pension, including not less than six years' service as Chief Justice of one or more of the Chartered High Courts, other than Nagpur, shall, if six years or more of his service as Chief Justice has been rendered in the High Court at Calcutta be eighteen hundred pounds per annum and, in any other case, fifteen hundred pounds per annum.

3. Subject as aforesaid, the pension payable to a Judge to whom the provisions of this Part of this Schedule apply shall be the basic pension for which provision is made in the next succeeding paragraph increased by the additional pension, if any, to which he is entitled under the subsequent provisions of this Part of this Schedule.

The basic pension to which such a Judge shall be entitled shall be—

(*a*) for the first seven completed years of service for pension, £375 per annum; and

(*b*) for each subsequent completed year, a further sum of £75 per annum:

Provided that his basic pension shall in no case exceed £750 per annum.

5. For the purpose of calculating additional pensions, service as a Judge shall be classified as follows:—

Grade I.—Service as Chief Justice in the High Court at Calcutta:

Grade II.—Service as Chief Justice in any Chartered High Court, other than those at Calcutta and Nagpur:

Grade III.—Service as Chief Justice in the High Court at Nagpur:

Grade IV.—Service as a puisne Judge in any Chartered High Court, other than that at Nagpur: and

Grade V.—Service as a puisne Judge in the High Court at Nagpur and any service in the Chief Court of Oudh.

6. For each completed year of service for pension in any grade mentioned in the last preceding paragraph the Judge shall be entitled to the additional pension specified in relation to that grade in the second column of the Table hereinunder printed:

Provided that the aggregate amount of his basic and additional pensions shall not exceed the amount specified in the third column of the said table in relation to the highest grade in which he has rendered service for not less than one completed year.

TABLE.

Service.			Additional pension per annum.	Maximum aggregate pension.
			£	£
Grade I	...	...	... 75	1,800
Grade II	...	...	... 55	1,500
Grade III	...	...	... 40	1,250
Grade IV	...	...	... 35	1,200
Grade V	...	...	... 20	1,000

7. A Judge who has rendered service for pension in two or more grades may claim that any period of service less than a completed year rendered by him in one grade, or any portion of any such period, shall be treated for the purposes of the last preceding paragraph as service rendered by him in a lower grade.

8. If a Judge who has served as acting Chief Justice of a Chartered High Court is subsequently appointed Chief Justice of that Court or of any other Chartered High Court, his service as an acting Chief Justice shall for the purposes of this Part of this Schedule be treated as service as Chief Justice of the Court in which the acting service was rendered:

Provided that service as acting Chief Justice of the High Court at Calcutta shall be treated as service as Chief Justice of the Court of which the Judge was at the date of his retirement Chief Justice.

PART II.

1. The provisions of this Part of this Schedule apply to a Judge who is a member of the Indian Civil Service and is not a Chief Justice of a Chartered High Court.

2. The pension payable to such a Judge shall be—

(*a*) the pension to which he is entitled under the ordinary rules of the Indian Civil Service, his service as Judge being treated as service therein; and

(*b*) the additional pension, if any, to which he is entitled under either of the two next succeeding paragraphs.

3 If his service for pension includes service for not less than seven completed years in any one or more of the Chartered High Courts, other than that at Nagpur, he shall be entitled to an additional pension in accordance with the following scale:—

	Per annum. £
for 7 completed years of service in one or more of those Courts ...	100
for 8 completed years of service in one or more of those Courts ...	120
for 9 completed years of service in one or more of those Courts ...	140
for 10 completed years of service in one or more of those Courts ...	160
for 11 completed years of service in one or more of those Courts ...	180
for 12, or more, completed years of service in one or more of those Courts	200

4. If his service for pension includes service for not less than seven completed years in any one or more of the High Courts and some part of that service, but less than seven completed years, has been rendered in one or more of the Courts mentioned in the preceding paragraph, he shall be entitled to an additional pension of £15 per annum in respect of each completed year of service rendered in one or more of the Courts so mentioned.

FOURTH SCHEDULE.

(Paragraph 20.)

INJURY GRATUITIES AND PENSIONS.

Officer.	Gratuity.		Annual pension. Higher scale.		Annual pension. Lower scale.	
	Rs.	£	Rs.	£	Rs.	£
Chief Justice or Acting Chief Justice of the High Court at Madras, Bombay, Calcutta, Allahabad, Lahore, Patna or Nagpur.	27,000	2,025	5,400	405	4,700	352
Judge, or Acting or Additional Judge, of a High Court, other than a Chief Justice or Acting Chief Justice of the Courts mentioned above.	15,000	1,125	4,700	352	4,000	300

FAMILY GRATUITIES AND PENSIONS.

A.—Widows.

Officer.	Gratuity.		Annual pension.	
	Rs.	£	Rs.	£
Chief Justice or Acting Chief Justice of the High Court at Madras, Bombay, Calcutta, Allahabad, Lahore, Patna or Nagpur.	17,000	1,275	5,000	375
Judge or Acting or Additional Judge of a High Court, other than a Chief Justice or Acting Chief Justice of the Courts mentioned above.	13,500	1,012	4,000	300

B.—Children.

—	Annual Child's Pension.	
	Rs.	£
If Child is motherless	550	41
If Child is not motherless	320	24

THE INDIA AND BURMA (TRANSITORY PROVISIONS) ORDER, 1937.

AT THE COURT AT BUCKINGHAM PALACE,

The 18th day of March, 1937.

PRESENT:

THE KING'S MOST EXCELLENT MAJESTY IN COUNCIL.

Whereas by section three hundred and ten of the Government of India Act, 1935 (hereafter in this Order referred to as "the India Act"), His Majesty in Council is empowered, for the purpose of facilitating the transition from the provisions of the Government of India Act to the provisions of that Act, to direct that the India Act shall, during a limited period, have effect subject to adaptations and modifications, to make with respect to a limited period temporary provision for ensuring that during and after the transition there are available to all Governments in India sufficient revenues to enable the business of those Governments to be carried on, and to make other temporary provisions for the purpose of removing any difficulties arising in relation to the transition.

And whereas it is provided by paragraph two of the Third Schedule to the India Act that such provision shall be made for enabling the Governors of Provinces to discharge conveniently and with dignity the duties of their offices as may be determined by His Majesty in Council:

And whereas by subsection (2) of section three hundred and nine of the India Act His Majesty in Council is empowered to revoke or vary any Order in Council previously made under that Act:

And whereas by section one hundred and fifty-six of the Government of Burma Act, 1935 (hereafter in this Order referred to as "the Burma Act"), His Majesty in Council is empowered, for the purpose of facilitating the transition from the provisions of the Government of India Act to the provisions of the Burma Act, to make temporary provision for the purpose of removing any difficulties arising in relation to the said transition:

And whereas a draft of this Order was laid before Parliament in accordance with the provisions of subsection (1) of section three hundred and nine of the India Act, and subsection (1) of section one hundred and fifty-seven of the Burma Act and an Address has been presented to His Majesty by both Houses of Parliament praying that an order may be made in the terms of this Order:

Now, therefore, His Majesty, in the exercise of the said powers and of all other powers enabling him in that behalf, is pleased, by and

with the advice of His Privy Council, to order, and it is hereby ordered as follows:—

Introductory.

1. This Order may be cited as the India and Burma (Transitory Provisions) Order, 1937.

2. The Interpretation Act, 1889, applies for the interpretation of this Order as it applies for the interpretation of an Act of Parliament.

Provisions applicable only to India.

3. (1) For a period of two years from the commencement of Part III of the India Act, the provisions of subsection (2) of section one hundred and forty-three of that Act (which authorises the continuance, until provision to the contrary is made by the Federal Legislature, of certain provincial taxes falling within the Federal List) shall have effect as if the reference to the first of January nineteen hundred and thirty-five were a reference to the commencement of the said Part III.

(2) Nothing in this paragraph shall continue any taxation beyond the time for which it would continue if the India Act had not been passed.

4. In every Province notwithstanding anything contained in the India Act or in any Order in Council made thereunder, but subject to any provision to the contrary which may be made by an Act of the Indian, the Federal or the Provincial Legislature passed in the exercise of the powers respectively conferred on them by the India Act—

(*a*) any tax, fine, penalty or other sum of whatever nature required by or under any law as in force immediately before the commencement of Part III of the India Act to be credited to any local fund or other fund shall, during the two financial years next following the commencement of the said Part III, continue to be so credited and shall not, during those years, be deemed to be part of the revenues of the Province;

(*b*) any expenditure from provincial revenues, the amount of which is prescribed by or under any law as in force immediately before the commencement of the said Part III, shall, in the said two financial years, be deemed to be expenditure charged on the revenues of the Province.

5. For the avoidance of doubt it is hereby declared that so much of the Road Development Fund, and so much of the Fund for the Economic Development and Improvement of Rural Areas, as remain in the hands of the Governor-General in Council immediately before the commencement of Part III of the India Act, will, notwithstanding anything in section one hundred and seventy-three of that Act, continue to be held by him for the same purposes as theretofore.

6. (1) In the case of Orissa and Sind there shall be charged on the revenues of the Province, in addition to the amounts directed to be charged thereon by the Government of India (Governors' Allowances and Privileges) Order, 1936, such sums as the Governor, exercising his individual judgment, may deem it necessary to expend in the provision and furnishing of his official residences; and the Governor shall exercise his individual judgment as respects any question arising in connection with the provision and furnishing of the said residences.

(2) In this paragraph "official residences" has the same meaning as in the Government of India (Governors' Allowances and Privileges) Order, 1936, and "provision," in relation to an official residence includes the reconstruction or improvement of a residence existing at the commencement of Part III of the India Act.

(3) This paragraph shall cease to have effect on the expiration of three years from the commencement of Part III of the India Act.

7. Notwithstanding anything in sub-paragraph (2) of paragraph three of the Government of India (Commencement and Transitory Provisions) Order, 1936, subsection (2) of section one hundred and eighty-one of the India Act shall come into force on the commencement of Part III of that Act:

Provided that, until the establishment of the Federal Railway Authority, references in the said subsection to the Authority shall be construed as references to the Governor-General in Council.

8. (1) The provisions of this paragraph shall have effect for a period of one year from the commencement of Part III of the India Act:

Provided that the Governor-General in Council or, as the case may be, His Majesty's representative for the exercise of the functions of the Crown in its relations with Indian States, may at any time direct that those provisions shall cease to have effect as respects any Province either generally, or in relation to any particular function or class of functions, or in relation to any particular law or enactment.

(2) Where any functions, which immediately before the commencement of Part III of the India Act were, under any existing Indian law, functions of the Governor or the Local Government of a Governor's Province, are transferred by or under the India Act to, or to some authority or officer nominated or appointed by, the Federal Government, the Governor shall continue to discharge those functions, subject to the like control by the Governor-General in Council as was exercisable by him immediately before the commencement of the said Part III.

Nothing in this sub-paragraph shall affect the operation of subsection (2) of section one hundred and forty-three of the India Act.

(3) The Chief Commissioner of a Chief Commissioner's Province shall discharge therein any functions which under any existing Indian law as for the time being in force are functions of a Provincial Government.

(4) Where any functions, which, for the purposes of the India Act, are functions of the Crown in its relations with Indian States, were

immediately before the commencement of Part III of that Act being discharged by the Governor or the Local Government of, or some officer serving in connection with the affairs of, a Province, the Governor or, as the case may be, that officer, shall continue to discharge those functions, subject to the like control by His Majesty's representative for the exercise of the functions of the Crown in its relations with Indian States as were exercisable immediately before the commencement of the said Part III by the Governor-General in Council.

9. Paragraphs 9 and 10 of the Government of India (Commencement and Transitory Provisions) Order, 1936, are hereby repealed.

Provisions applicable both to India and Burma.

10. Notwithstanding the separation of India and Burma, the Indian Patents and Designs Act, 1911, shall, for a period of two years from the date of separation, have effect both in Burma and in India as if Burma had continued to be part of India, and accordingly references in that Act to the Advocate-General, to the High Court and to district courts shall, during that period, include references to the Advocate-General of Burma, the High Court at Rangoon and district courts in Burma, and the Governor of Burma shall be included among the authorities to whom certain documents are to be sent under section seventy-two of that Act:

Provided that nothing in this paragraph shall restrict any right of the Federal or the Indian Legislature or the Legislature of Burma to amend or repeal the said Act as respects India or Burma, as the case may be, with effect from before the expiration of the said period.

M. P. A. Hankey.

THE GOVERNMENT OF INDIA (ADAPTATION OF ACTS OF PARLIAMENT) ORDER, 1937.

AT THE COURT AT BUCKINGHAM PALACE,

The 18th day of March, 1937.

PRESENT:

THE KING'S MOST EXCELLENT MAJESTY IN COUNCIL.

Whereas by sub-section (5) of section three hundred and eleven of the Government of India Act, 1935 (hereafter in the recitals to this Order referred to as "the Act") it is provided that any Act of Parliament containing references to India or any part thereof, to countries other than or situate outside India or other than or situate outside British India, to His Majesty's dominions, to a British possession, to the Secretary of State in Council, to the Governor-General in Council, to a Governor in Council or to Legislatures, courts or authorities in, or to matters relating to the government or administration of, India or British India, shall have effect subject to such adaptations and modifications as His Majesty in Council may direct, being adaptations and modifications which appear to His Majesty in Council to be necessary or expedient in consequence of the provisions of the Act or of the Government of Burma Act, 1935:

And whereas by sub-section (2) of section one hundred and seventy-eight of the Act it is provided that all enactments relating to any such loans, guarantees and other financial obligations of the Secretary of State in Council as are referred to in sub-section (1) of that section shall in relation to those loans, guarantees and obligations continue to have effect with certain substitutions and with such other modifications and such adaptations as His Majesty in Council may deem necessary:

And whereas under section three hundred and twenty of the Act His Majesty by Order in Council has appointed the first day of April, nineteen hundred and thirty-seven, as the date on which the provisions of the Act, other than the provisions of Part II thereof, are, subject to any exceptions mentioned in the Order, to come into force:

And whereas a draft of this Order has been laid before Parliament in accordance with the provisions of sub-section (1) of section three hundred and nine of the Act and an address has been presented to His Majesty by both Houses of Parliament praying that an Order may be made in the terms of this Order:

Now, therfore, His Majesty, in the exercise of the said powers and of all other powers enabling him in that behalf, is pleased, by and with the advice of His Privy Council, to order, and it is hereby ordered, as follows:—

1. This Order may be cited as the Government of India (Adaptation of Acts of Parliament) Order, 1937, and shall come into operation on the first day of April, nineteen hundred and thirty-seven.

2. The Acts of Parliament referred to in the Schedule to this Order shall have effect subject to the adaptations and modifications specified in the said Schedule.

3. In any Act of Parliament passed before the commencement of this Order and not referred to in the Schedule thereto references to the revenues of India shall be construed, in relation to the period after the establishment of the Federation of India, as references to the revenues of the Federation and, in relation to the period between the commencement of Part III of the Government of India Act, 1935, and the establishment of the Federation, as references to the revenues of the Governor-General in Council.

4. The provisions of this Order which adapt or modity any Act by transferring functions to another authority shall not render invalid any order, bye-law, rule or regulation duly made, or anything duly done, before the commencement of this Order and any such order, bye-law, rule, regulation or thing may be revoked, varied or undone in like manner, to the like extent and in the like circumstances as orders, bye-laws, rules, regulations or things made or done by the authority to which the functions are transferred.

5. Nothing in the Aden Colony Order, 1936, shall be construed as requiring that references in Acts of Parliament to India or British India shall continue to be construed as including references to Aden.

M. P. A. Hankey.

THE SCHEDULE.

PART I

The Interpretation Act, 1889.

(52 & 53 Vict. c. 63.)

In section eighteen, the definitions of "British India" and "India" shall be omitted; and in the definition of "Governor" the words "and India" shall be omitted and after the words "any other British possession" there shall be inserted the words "outside British India."

After section eighteen there shall be inserted the following section:—

Special definitions relating to India

"18A.—(1) In this Act and in every other Act, whether passed before or after the commencement of this Act,

(i) the expression "British possession", when used in relation to British territories in India, shall, unless the contrary intention appears, mean British India as a whole, and references, in whatever words, to territories of the Crown abroad shall as respects India be construed accordingly;

(ii) the expression "Governor" shall, when used in relation to British India as a whole or to India as a whole, mean the Governor-General;

(iii) the expression "Governor-General" shall, when used in relation to British India or to India,

(*a*) in relation to the period between the commencement of Part III of the Government of India Act, 1935, and the establishment of the Federation of India, mean the Governor-General in Council;

(*b*) in relation to any period after the commencement of the said Part III, be construed as including a reference to the Governor of a Province in India acting within the scope of any authority given to him under Part VI of the said Act;

(iv) the expression "Indian legislature" and, when used in relation to British India or to India, the expression "legislature" shall mean the authority, other than the Imperial Parliament, competent to make laws for British India, or for the relevant part of British India.

(2) This section applies for the interpretation of the Government of India (Adaptation of Acts of Parliament) Order, 1937, but it does not apply for the interpretation of the Government of India Act, 1935, or the Government of Burma Act, 1935, nor, save as aforesaid, for the interpretation of any Order in Council

made under either of those Acts, notwithstanding that that Order may provide generally that this Act shall apply for the interpretation thereof as it applies for the interpretation of an Act of Parliament."

PART II.

General enactments.

The Criminal Law (India) Act, 1828

(9 Geo. 4. c. 74.)

In sections one, seven and eight, references (in whatever words) to the British territories under the government of the East India Company shall be construed as references to British India, British Burma, Aden and the Straits Settlements.

The Slave Trade Act, 1843.

(6 & 7 Vict. c. 98.)

At the end of section four there shall be inserted the following sub-section:—

"(2) In the case of British India, any such writ as aforesaid may be addressed to the chief justice, or other chief judge, of any court which is a High Court for the purposes of the Government of India Act, 1935."

The Chinese Passengers Act, 1855.

(18 & 19 Vict. c. 104.)

In section one, the words "not being under the government of the East India Company", and in sections eight and ten the words "or in the territories of the East India Company", shall be omitted.

The Evidence by Commission Act, 1859.

(22 Vict. c. 20.)

At the end of section five there shall be inserted the following sub-section:—

"(2) For the purposes of this Act the expression "Supreme Court" means, as respects India, a court which is a High Court for the purposes of the Government of India Act, 1935, and, as respects Burma, the High Court at Rangoon."

The Indian Securities Act, 1860.

(23 & 24 Vict. c. 5.)

In section one for the words "by the Secretary of State in Council" there shall be substituted the words "by the Governor-General".

The Admiralty Jurisdiction (India) Act, 1860.

(23 & 24 Vict. c. 88.)

For section one there shall be substituted the following section:—

"1. The Admiralty Offences (Colonial) Act, 1849, shall apply to British India and British Burma as it applies to colonies."

Application of principal Act to British India and British Burma.

The Colonial Laws Validity Act, 1865.

(28 & 29 Vict. c. 63.)

In section one, for the words "and such territories as may for the time being be vested in Her Majesty under or by virtue of any Act of Parliament for the government of India" there shall be substituted the words "British India and British Burma".

The Documentary Evidence Act, 1868.

(31 & 32 Vict. c. 37.)

In section five, in the definition of "British colony and possession" the words from "and such" to "India" shall be omitted, and at the end of the section there shall be inserted the following sub-section:—

"(2) For the purposes of this Act, British India as a whole and also each Governor's Province and Chief Commissioner's Province thereof shall be regarded as separate British possessions."

The Colonial Prisoners Removal Act, 1869.

(32 & 33 Vict. c. 10.)

In section two, for the words "such territories as may for the time being be vested in Her Majesty by virtue of any Act of Parliament for the government of India" there shall be substituted the words "British India or British Burma".

The Extradition Act, 1870.

(33 & 34 Vict. c. 52.)

In section twenty-three, after the words "of India," there shall be inserted the words "or, as the case may be, of the Governor of Burma"; the words "in Council" shall be omitted and after the words "British India" there shall be inserted the words "or with Burma."

In section twenty-six, in the definition of "governor" the words "and includes the governor of any part of India" shall be omitted.

The Foreign Enlistment Act, 1870.

(33 & 34 Vict. c. 90.)

In section thirty, in the definition of "The Governor" the words "or the governor of any presidency" shall be omitted, and for the words "and where a British possession consists" there shall be substituted the words "and as respects a British possession which consists."

The Slave Trade Act, 1873.

(36 & 37 Vict. c. 88.)

In section two, at the end of the definition of "governor" there shall be inserted the following words:—

"Provided that as respects British India it means the Governor-General."

The Courts (Colonial) Jurisdiction Act, 1874.

(37 & 38 Vict. c. 27.)

In section two, for the words from "or the Channel Islands" to "India and" there shall be substituted the words "the Channel Islands, British India or British Burma, but shall include," and at the end of that section there shall be inserted the following section:—

Application of Act to British India and British Burma

"2A. This Act applies in relation to each Governor's Province and Chief Commissioner's Province of British India and to British Burma as it applies in relation to a colony."

The Slave Trade Act, 1876.

(39 & 40 Vict. c. 46.)

In section two, for the words "If the Governor-General of India in Council shall at a meeting for making laws and regulations amend" there shall be substituted the words "If the Legislature of India shall amend;" and for the words "the Secretary of State for India" there shall be substituted the words "the Secretary of State."

In section three, for the words "section 330 of Act 10 of 1872 passed by the Governor-General of India in Council and" there shall be substituted the words "chapter XL of the Indian Act V of 1898;" for the words "the Governor-General of India in Council or any Indian Government" there shall be substituted the words "His Majesty's Representative for the exercise of the functions of the Crown in its relations with Indian States or of the Governor-General;" and for the words "Her Majesty's Indian dominions" there shall be substituted the words "British India, British Burma or Aden."

After section three there shall be inserted the following sections:—

"3A. (1) The provisions of this Act shall apply to Burma subject to the modifications specified in this section. Application of Act to Burma.

(2) In section one, for the words "of any Prince or State in India in alliance with Her Majesty" there shall be substituted the words "a native of any part of Burma not forming part of British Burma;" and for the words "British India" there shall be substituted the words "British Burma."

(3) In section two, for the words "the Legislature of India" there shall be substituted the words "the Burma Legislature."

(4) In section three, for the words "every High Court in India" there shall be substituted the words "the High Court at Rangoon;" for the words "And every High Court" there shall be substituted the words "And the High Court;" for the words from "agent of" to the words "alliance with Her Majesty" there shall be substituted the words "agent of the Governor in the said parts;" and for the words "jurisdiction in India" there shall be substituted the words "jurisdiction in Burma."

(5) For any reference to the Indian Penal Code and for the reference to Chapter XL of the Code of Criminal Procedure there shall be substituted a reference to the Code or Chapter in question as adapted or modified under the Government of Burma Act, 1935, and in force as part of the law of Burma immediately after the commencement of that Act:

Provided that, if the Code of Criminal Procedure is repealed and re-enacted in Burma, either with or without modifications, the reference to the said Chapter XL shall be construed as a reference to the corresponding provisions of the re-enacted Code as for the time being in force in Burma.

3B. (1) The provisions of this Act shall apply to Aden subject to the modifications specified in this section. Application of Act to Aden.

(2) In section one, the words "or of any Prince or State in India in alliance with Her Majesty" shall be omitted and for the words "British India" there shall be substituted the word "Aden."

(3) In section two, for the words "the Legislature of India" there shall be substituted the words "any authority competent to make laws for Aden;" after the word "unless," where it first occurs, there shall be inserted the words "(in the case of a law not made by Order in Council)," and for the words "amending Act" there shall be substituted the words "amending law."

(4) In section three, for the words "every High Court in India" there shall be substituted the words "the Supreme Court of Aden;" for the words "And every High Court" there shall be substituted the words "And the Supreme Court"; for the words from "agent of" to the words "alliance with Her Majesty" there shall be substituted the words "agent of the Governor in the said parts," and for the words "jurisdiction in India" there shall be substituted the words "jurisdiction in or for Aden."

(5) Any reference to the Indian Penal Code shall be construed as a reference to that Code as in force in Aden immediately after the commencement of the Aden Colony Order, 1936, and the reference to Chapter XL of the Code of Criminal Procedure shall be construed as a reference to that Chapter as for the time being in force in Aden, or, if the said Code is repealed and re-enacted in Aden, either with or without modifications, as a reference to the corresponding provisions of the re-enacted Code as for the time being in force in Aden.

Section five shall be omitted.

The Colonial Fortifications Act, 1877.

(40 & 41 Vict. c. 23.)

In section three, for the words "India as defined for the purposes of the Acts for the time being in force relating to the Government of India" there shall be substituted the words "British India or British Burma."

The Colonial Stock Act, 1877.

(40 & 41 Vict. c. 59.)

In section twenty-six, for the words "India as defined for the purposes of the Acts for the time being in force relating to the Government of India" there shall be substituted the words "British India or British Burma."

The Territorial Water Jurisdiction Act, 1878.

(41 & 42 Vict. c. 73.)

In section seven, in the definition of "Governor" the words "or the Governor of any presidency" shall be omitted, and for the words "and where a British possession" there shall be substituted the words "and as respects a British possession which."

The Fugitive Offenders Act, 1881.

(44 & 45 Vict. c. 69.)

In section thirty-nine in the definition of "governor" the words "and includes the governor and lieutenant-governor of any part of India" shall be omitted.

The Colonial Prisoners Removal Act, 1884.

(47 & 48 Vict. c. 31.)

After section fourteen there shall be inserted the following sections:—

"14A (1) This Act in its application to British India shall have effect subject to the modifications specified in this section. Application of Act to British India.

(2) In relation to persons removed or to be removed, or returned or to be returned, from or to British India to or from any part of His Majesty's dominions outside British India, British India shall be deemed to be one British possession and, in relation to that possession, any reference to the Government, to the Governor or to the Governor in Council and any reference to the Legislature shall be construed as a reference to the Governor-General or, as the case may be, to the Indian or Federal Legislature.

(3) In relation to persons removed or to be removed, or returned or to be returned, from or to one Province in British India to or from another Province in British India, each Province shall be deemed to a separate British possession; any reference to the Government or to the Governor in Council and any reference to the Legislature shall, in relation to a Governor's Province, be construed as a reference to the Governor or, as the case may be, to the Provincial Legislature; and any reference to the Government, the Governor or the Governor in Council and any reference to the Legislature shall, in relation to a Chief Commissioner's Province, be construed as a reference to the Governor-General, or, as the case may be, to the Indian or Federal Legislature.

14B. In the application of this Act to British Burma references to the Governor in Council shall be construed as references to the Governor." Application of Act to British Burma.

In section eighteen—

(*a*) after the words "unless the context otherwise requires" there shall be inserted the words "and subject, as respects India, to the provisions of section fourteen A of this Act;"

(*b*) in the definition of "British possession," the words "and any part of India under a Governor or Lieutenant-Governor shall be deemed to be one British possession" shall be omitted;

(*c*) the definition of "India" shall be omitted;

(*d*) in the definition of "legislature," the words "and in every part of India means the Governor-General in Council" shall be omitted; and

(*e*) in the definition of "Governor," the words "and includes the Governor-General of India and also the Governor and Lieutenant-Governor of any part of India" shall be omitted.

The Evidence by Commission Act, 1885.

(48 & 49 Vict. c. 74.)

In sections two and three, after the word "India" there shall be inserted the word "Burma".

The Colonial Courts of Admiralty Act, 1890.

(53 & 54 Vict. c. 27.)

At the end of section four there shall be inserted the following paragraph:—

"This section shall not apply to Indian laws or Burma laws."

In proviso (*a*) to sub-section (2) of section nine, for the words "or in any British possession" there shall be substituted the words "or in Burma or in any other British possession".

The Foreign Jurisdiction Act, 1890.

(53 & 54 Vict. c. 37.)

At the end of section fifteen there shall be inserted the words "and natives of any part of Burma which is not part of British Burma".

The Superannuation Act, 1892.

(55 & 56 Vict. c. 40.)

In sub-section (3) of section one, after the words "revenue of India" there shall be inserted the words "or of Burma" and the words "in Council of India" shall be omitted.

In paragraph (c) of section four, after the words "of India" there shall be inserted the words "or of Burma," and at the end of the section there shall be inserted the following sub-section:—

"(2) In this Act references to the revenue of India include references to the revenues of the Federation (and, before the establishment of the Federation, the revenues of of the Governor-General in Council) and to the revenues of any Province in India."

The Regimental Debts Act, 1893.

(56 & 57 Vict. c. 5.)

In section sixteen, after the word "India" there shall be inserted the words "or Burma."

In section twenty-five, for the words "as if it were a colony" there shall be substituted the words "and to Burma as if they were colonies"; and at the end of the section there shall be added the words "or to any native of Burma within the meaning of Burma military law."

In section twenty-six, after the word "India" where it first occurs there shall be inserted the words "or Burma;" after the words "of the Commander-in-Chief in India" there shall be inserted the words "or of the general officer commanding the forces in Burma;" the words "or of any provincial Commander-in-Chief in India" shall be omitted and for the words "The Secretary to the Government of India in the Military Department" there shall be substituted the words "The Governor-General of India or as the case may be, the Governor of Burma".

In section twenty-seven, for the words "the Indian military and orphan funds, or either of them" there shall be substituted the words "any officially recognised pension or provident fund".

Section twenty-eight shall be omitted.

In section twenty-nine, in the definition of "representation" after the word "India" in both places where it occurs there shall be inserted the word "Burma", and in the definition of "official administrator" the words "presidency or" shall be omitted, and after the word "province" there shall be inserted the words "and in Burma the administrator-general of Burma".

The Trustee Act, 1893.

(56 & 57 Vict. c. 53.)

Until the Parliament of Northern Ireland makes other provision in that behalf, this Act shall, in its application to Northern Ireland, have effect as if:—

(a) at the end of paragraph (d) of section one there were inserted the words "or in any sterling loans raised by the Secretary of State on behalf of the Governor-General of India in Council under the provisions of Part XIII of the Government of India Act, 1935"; and

(b) at the end of the said section there were inserted the words "(2) the dissolution of the Council of India shall not remove from the operation of this section any securities which were within the operation thereof immediately before the dissolution of that Council".

The Merchant Shipping Act, 1894.

(57 & 58 Vict. c. 60.)

In section ninety-nine, for the words "Indian Marine Service", in both places where they occur, there shall be substituted the words "Indian Navy".

In section one hundred and twenty-five, in subsection (1), after the words "of India", there shall be inserted the words "or Burma", and after the words "British India" there shall be inserted the words "or British Burma"; in subsection (2), for the words from "as the Governor-General" to the end of the subsection there shall be substituted the words "as the Governor-General of India or the Governor of Burma, according as the agreement is made in India or Burma, may direct"; in subsection (3) the words "in Council of India", wherever they occur, shall be omitted, and in subsection (4) after the word "India", wherever it occurs, there shall be inserted the words "or Burma".

In section one hundred and eighty-five, the words "in Council of India", wherever they occur, shall be omitted; in subsection (1), after the words "natives of India" there shall be inserted the words "or Burma"; in subsection (2), after the words "The part of India" there shall be inserted the words "or of Burma"; in subsection (3), the words "out of the revenues of India" shall be omitted, and at the end of the subsection there shall be inserted the words "but so far as not recovered from the owner or master shall be a liability to be met out of the revenues of India or, as the case may be, of Burma," and in subsection (4) after the word "India" there shall be inserted the words "or Burma".

In section two hundred and seventy, after the words "British India" there shall be inserted the words "British Burma".

In subsection (2) of section three hundred and sixty-eight, for the words "Governor-General of India in Council" there shall be substituted the words "legislature of India".

After section three hundred and sixty-eight there shall be inserted the following section:—

"Power for Legislature of Burma to apply Part III.

368A. (1) The provisions of the past preceding section shall apply in relation to British Burma as they apply in relation to British India with the substitution of references to British Burma for references to British India or India and of a reference to Burma law for the reference to Indian law.

(2) Any Act of the Indian Legislature which, as adapted or modified under the Government of Burma Act, 1935, is in force immediately after the commencement of that Act as part of the law of Burma shall, for the purposes of this section, be deemed to be an Act of the Legislature of Burma".

The Appellate Jurisdiction Act, 1908.

(8 Edw. 7, c. 51.)

In subsection (1) of section two, for the words "any High Court in British India" there shall be substituted the words "the Federal Court in India, a High Court in British India or the High Court at Rangoon", and for subsection (3) of that section there shall be substituted the following subsection:

"(3) In this section the expression 'High Court in British India' means a court which is a High Court for the purposes of the Government of India Act, 1935, and, as respects any period before the commencement of Part III of that Act, a court which was, or was recognised by Order in Council as being, a High Court in British India for the purposes of this section".

In the Schedule, after the words "British India" there shall be inserted the words "British Burma".

The Pensions (Governors of Dominions, etc.) Act, 1911.

(1 & 2 Geo. 5, c. 24.)

In subsection (1) of section twelve, after the words "of British India" there shall be inserted the words "and of British Burma".

The British Nationality and Status of Aliens Act, 1914.

(4 & 5 Geo. 5, c. 17.)

In subsection (1) of section eight, after the words "British India" there shall be inserted the words "British Burma".

The Prize Courts Act, 1915.

(5 & 6 Geo. 5, c. 57.)

In section four, for the words "as respects any prize court in India except on the application of the Governor-General of India in Council" there shall be substituted the words "as respects any prize court in India, except on the application of the Governor of the Province in which the court has its principal seat or, as respects any prize court in Burma, except on the application of the Governor of Burma".

The Official Secrets Act, 1920.

(10 & 11 Geo. 5, c. 75.)

In proviso (*a*) to subsection (1) of section eleven, for the words "and India", there shall be subsituted the words "India and Burma".

The Trusts (Scotland) Act, 1921.

(11 and 12 Geo. 5. c. 58.)

At the end of section ten there shall be inserted the following subsection:—

"(2) In this section the expression "the Indian Government" means the Secretary of State in Council of India, but the dissolution of the Council of India shall not remove from the operation of this section any stock, debentures, bonds or mortgages which were within the operation thereof immediately before the dissolution of that Council."

The Treaties of Washington Act, 1922.

(12 & 13 Geo. 5. c. 21.)

In subsection (1) of section five, after the word "India" there shall be inserted the word "Burma".

The Finance Act, 1923.

(13 & 14 Geo. 5. c. 14.)

In section nineteen, in subsection (2), after the words "British India" there shall be inserted the words "or British Burma", and in subsection (4) for the words "British India or for" there shall be substituted the words "India, Burma or".

The Trustee Act, 1925.

(15 & 16 Geo. 5. c. 19.)

At the end of section one, there shall be inserted the following subsection:—

"(3) The dissolution of the Council of India shall not remove from the operation of this section any debenture stock or other stock which was within the operation thereof immediately before the dissolution of that Council".

The Merchant Shipping (International Labour Conventions) Act, 1925.

(15 & 16 Geo. 5. c. 42.)

At the end of section five there shall be inserted the following subsection—

"(2) Notwithstanding the separation of India and Burma this Act shall continue to have effect as if Burma were still part of India".

Indian and Colonial Divorce Jurisdiction Act, 1926.

(16 & 17 Geo. 5. c. 40.)

In subsection (1) of section one, for the words "a High Court in India to which Part IX of the Government of India Act applies" there shall be substituted the words "a High Court in British India constituted by His Majesty by Letters Patent"; and for the words "where a court in India" there shall be substituted the words "where a court in British India".

In subsection (4) of section one, the words "in Council of India" shall be omitted.

In subsection (5) of section one, for the words "and India" there shall be substituted the words "India and Burma".

At the end of section one, there shall be inserted the following sections:—

Divorce Jurisdiction of High Court in Burma where parties are domiciled in England or Scotland

"1A. The provisions of section one of this Act shall apply in relation to Burma as they apply in relation to India, subject to the following modifications, that is to say—

(*a*) in subsection (1) of the said section, for the words "a High Court in British India constituted by His Majesty by Letters Patent" there shall be substituted the words "the High Court at Rangoon", and for the words "where a court in British India" there shall be substituted the words "where the court";

(*b*) in the provisos to the said subsection, for the words "any such court", wherever those words occur, there shall be substituted the words "the court"; and for the words "no such court shall" there shall be substituted the words "the court shall not";

(*c*) in subsection (3) of the said section, for the words "the High Court in India by which the decree or order is made" there shall be substituted the words "the High Court at Rangoon" and for the words "by the High Court in India" there shall be substituted the words "by the High Court at Rangoon";

(*d*) in subsection (4) of the said section, for the words "a High Court in India" there shall be substituted the words "the High Court at Rangoon" and in paragraph (*g*) for the words "each High Court" there shall be substituted the words "the High Court";

(*e*) in subsection (5) of the said section, for the words "a High Court in India" there shall be substituted the words "the High Court at Rangoon";

(*f*) save as aforesaid, for the word "India" wherever it occurs in the said section (except in the phrase "India and Burma") there shall be substituted the word "Burma".

Saving for pending proceedings, rules, etc.

1B. (1) Any proceedings commenced under this Act before the separation of Burma from India may be continued, determined and appealed against in all respects as if Burma had continued to be part of India.

(2) The rules made under subsection (4) of section one of this Act which immediately before the separation of Burma from India were applicable to the High Court at Rangoon shall, until superseded by fresh rules, continue to apply to that court, and nominations made and approved under those rules shall continue to have effect."

In section two, for the words "the foregoing provisions of this Act" there shall be substituted the words "the provisions of section one of this Act".

In section three, after the words "in India" there shall be inserted the words "(including Burma and Aden)".

Indian Church Act, 1927.

(17 & 18 Geo. 5. c. 40.)

In section one, in the definition of "chaplain" for the words from "is appointed" to "a like chaplaincy" there shall be substituted the words—

"(i) is a chaplain to whom the provisions of section two hundred and sixty-nine of the Government of India Act, 1935, or the provisions of section one hundred and twenty-two of the Government of Burma Act, 1935, apply; or

(ii) is in the permanent service of the Crown and has been or is accepted by the Secretary of State in Council of India, or by the Secretary of State, as holding for the purposes of this Act a chaplaincy in India, Burma or Aden."

At the end of the said section there shall be inserted the following words and sub-section—

"Any reference in this Act to the revenues of the Federation of India shall, as respects the period before the establishment of the Federation, be construed as a reference to the revenues of the Governor-General in Council.

Any reference in this Act to, or to any provisions of, an Indian Act shall be construed as a reference to that Act as for the time being in force in India and, as respects any period after the separation of Burma and Aden from India, as including references to that Act or those provisions as for the time being in force in Burma and as for the time being in force in Aden, and, if any such Act or provisions have, whether in India, Burma or Aden, been repealed and re-enacted either with or without modifications, any reference thereto in this Act shall be construed as a reference to the re-enacted Act or provisions as in force in the country in question.

(2) Nothing in the Government of India Act, 1935, shall be construed as affecting the unity of the Indian Church as defined in this section or as excluding Burma or Aden from the operation of this Act."

In section three, after the words "church or burial ground" in the first two places where those words occur there shall be inserted the words "in India, Burma or Aden."

In section four, in sub-section (1), the words "in Council," in both places where those words occur, shall be omitted, and after the words "whether consecrated or not" there shall be inserted the words "which are situate in India."

After the said sub-section (1) there shall be inserted the following sub-section—

"(1*a*) If such a certificate as aforesaid is sent to the Governor General of India he shall also forward a certified copy thereof to the Governor of Burma who shall cause it to be published in the official Gazette of Burma and thereupon shall be at liberty to resume complete control of all or any Maintained Churches or burial grounds, whether consecrated or not, which are situate in Burma, and the Indian Church and the officials and members thereof respectively shall cease to have any rights therein."

In sub-section (2), at the end of paragraph (i), there shall be inserted the words "or, as the case may be, of the Government of Burma."

In sub-section (3), for the words "the Governor-General of India in Council" there shall be substituted the words "the Governor-General of India or, as the case may be, the Governor of Burma"; and at the end of the sub-section there shall be inserted the following sub-section—

"(3A) The provisions of sub-sections (1A), (2) and (3) of this section shall apply in relation to Aden as they apply in relation to Burma, with the substitution of the word 'Aden' for the word 'Burma' wherever that word occurs."

In section five, for the words from "The Governor-General" to "Council of India" there shall be substituted the words "The Governor-General of India as respects India, the Governor of Burma, as respects Burma, and the Governor of Aden as respects Aden, in each case with the sanction of the Secretary of State."

In paragraph (ii) of the said section for the words "the revenues of India" there shall be substituted the words "the revenues of the Federation of India, the revenues of Burma or the revenues of Aden, as the case may be."

In paragraph (x) of the said section for the words "the Governor-General of India, in Council" there shall be substituted the words "the Governor-General of India, the Governor or Burma, or the Governor of Aden."

At the end of the said section there shall be inserted the following sub-section—

"(2) Any rules made under this section which immediately before the separation of Burma and Aden from India were applicable to Burma or Aden shall, until superseded by other rules, continue to apply with any necessary modifications to Burma or Aden, as the case may be."

In section eight, at the end of sub-section (2), there shall be inserted the following sub-section—

"(2A) Notwithstanding anything in section of this Act, section ninety-two of the Code of Civil Procedure as for the time being in force in India shall, for the purposes of this section, be deemed to be in force in Aden as part of the law of Aden, whether it is there in force for other purposes or not, and any appeal under this section from the decision of a court in Aden shall lie to, and be entertained by, the High Court at Bombay."

Sub-section (3) of the said section shall be omitted.

In section nine, in paragraph (i) for the words "the Secretary of State in Council of India" in both places in which they occur there shall be substituted the words "any competent authority"; in paragraphs (iii) and (iv) after "continuance" there shall be inserted the words "by the competent authority"; and in paragraph (iv) after the words "minister in India" there shall be inserted the words "Burma or Aden."

Throughout the section for the words "the revenues of India" there shall be substituted the words "public revenues of India, Burma or Aden."

The Easter Act, 1928.

(18 & 19 Geo. 5. c. 35.)

In part I of the Schedule, after the words "British India" there shall be inserted the words "British Burma."

The Appellate Jurisdiction Act, 1929.

(19 & 20 Geo. 5. c. 8.)

For sub-section (2) of section one there shall be substituted the following sub-section:—

"(2) A person shall be qualified under this section if he is a Privy Councillor, and

(*a*) is or has been a judge of the Federal Court in India, a High Court in British India or the High Court at Rangoon; or

(*b*) is a barrister, advocate or pleader of not less than fourteen years standing who practises, or has practised, in British India or British Burma.

In this sub-section the expression "High Court in British India" means a court which is a High Court for the purposes of the Government of India Act, 1935, and, as, respects any period before the commencement of Part III of that Act, a court which was a High Court within the meaning of clause (24) of section three of an Act of the Indian Legislature known as the General Clauses Act, 1897."

In sub-section (5), for the words "the revenues of India" there shall be substituted the words "the revenues of the Federation of India, the revenues of the Governor-General of India in Council or the revenues of Burma, as the case may be."

The Companies Act, 1929.

(19 & 20 Geo. 5. c. 23.)

In paragraph (*h*) of sub-section (1) of section fifty-four, for the words "as amended by" there shall be substituted the words "as amended or adapted by or under."

The Import Duties Act, 1932.

(22 & 23 Geo. 5. c. 8.)

At the end of sub-section (1) of section four there shall be inserted the following words:—

"This section shall apply also to Burma as respects goods imported after the thirty-first day of March, nineteen hundred and thirty-eight."

In sub-section (1) of section twenty-one, in the definition of "the British Empire" after the word "India" there shall be inserted the words "and Burma."

The Isle of Man (Customs) Act, 1932.

(22 & 23 Geo. 5. c. 16.)

At the end of sub-section (1) of section two there shall be inserted the following words:—

"This section shall apply also to Burma as respects goods imported after the thirty-first day of March, nineteen hundred and thirty-eight."

In paragraph (*b*) of section eleven, after the word "India" there shall be inserted the words "and Burma."

The Finance Act, 1933.

(23 & 24 Geo. 5. c. 19.)

At the end of paragraph (*a*) of sub-section (1) of section fifteen there shall be inserted the words "(as adapted by any Order in Council made under the Government of India Act, 1935)."

In paragraph 2(*d*) of Schedule V, after the word "India" there shall be inserted the word "Burma."

The Isle of Man (Customs) Act, 1933.

(23 & 24 Geo. 5. c. 40.)

At the end of paragraph (*a*) of section eleven and at the end of paragraph (*b*) of sub-section (2) of section twenty-one there shall be inserted the words "(as adapted by any Order in Council made under the Government of India Act, 1935)."

In paragraph 2(*d*) of Schedule IV, after the word "India" there shall be inserted the word "Burma."

The Whaling Industry (Regulation) Act, 1934.

(24 & 25 Geo. 5. c. 49.)

In sub-section (1) of section fifteen, the words "or by the Indian Legislature" and the words "or, as the case may be, in British India" shall be omitted, and in sub-section (1) of section seventeen, after the word "India" there shall be inserted the words "or Burma."

The Unemployment Insurance Act, 1935.

(25 & 26 Geo. 5. c. 8.)

In paragraph (*d*) of sub-section (10) of section ninety-six, after the words "Indian forces" there shall be inserted the words "Burma forces."

The National Health Insurance Act, 1936.

(26 Geo. 5 & 1 Edw. 8. c. 32.)

In sub-section (1) of section one hundred and twenty-nine, after the words "Indian Forces" there shall be inserted the words "of His Majesty's Burma Forces."

PART III.

The Army and Air Force Acts.

(a) *Adaptations of the Army Act and also of the Air Force Act.*

In section thirteen,—in paragraph (*a*) of sub-section (1) after the word "India" there shall be inserted the word "Burma."

In section fifty-four,—in sub-section (8), after the word "India" there shall be inserted the words "or Burma," and at the end of the sub-section there shall be added the words "or, as the case may be, by the Governor of Burma"; and in sub-section (9) after the words "the Governor-General" there shall be inserted the words "or, if he has been tried in Burma, by the Governor of Burma."

In section fifty-nine, after the word "India," in both places where it occurs, there shall be inserted the word "Burma."

In section sixty, after the word "India," in both places where it occurs, there shall be inserted the words "or Burma."

In section sixty-four,—in sub-section (4) after the word "India," in the first three places where it occurs, there shall be inserted the word "Burma," and after the words "Governor-General of India" there shall be inserted the words "the Governor of a Province in India, the Governor of Burma."

In section sixty-eight,—in paragraphs (*f*), (*g*) and (*h*) of sub-section (2) after the word "India" wherever it occurs, there shall be inserted the word "Burma."

In section ninety-four, after the word "India" where it first occurs, there shall be inserted the word "Burma" and after the words "in the Dominion; and" there shall be inserted the words "In Burma, any person duly authorised in that behalf by the Governor of Burma; and."

In section one hundred and twenty-two,—in sub-section (6) after the words "the Governor-General of India" there shall be inserted the words "the Governor of Burma."

In section one hundred and twenty-seven, the words "to the provisions of the Indian Evidence Act, 1872, or" shall be omitted, and after the word "legislature" there shall be inserted the words "or authority."

In section one hundred and thirty,—in sub-section (5) for the words "presidency in which the person is confined" there shall be substituted the words "Province in which the person is confined and, in the case of a person confined in Burma, the Governor of Burma", and after the words "the United Kingdom, India", in both places where those words occur, there shall be inserted the word "Burma".

In section one hundred and thirty-two, after the words "in India for the Governor-General" in both places where those words occur, there shall be inserted the words "and in Burma for the Governor"; for the words "the Secretary of State or Governor-General" there shall be substituted the words "the Secretary of State, Governor-General or Governor", and for the words "The

Secretary of State and Governor-General shall by rule" there shall be substituted the words "The Secretary of State, the Governor-General and the Governor of Burma shall by rules".

In section one hundred and thirty-four, after the word "India" in both places where that word occurs, there shall be inserted the words "or Burma".

In section one hundred and thirty-five, after the words "with the Governor-General of India" there shall be inserted the words "the Governor of any Province in India, the Governor of Burma,"; for the words "or in such colony" there shall be substituted the words "Burma or that colony"; and after the words "from the Governor-General of India" there shall be inserted the words "the Governor of the Province, the Governor of Burma".

In section one hundred and thirty-six, for the words "passed by the Governor-General of India in Council" there shall be substituted the words "for the time being in force in India or Burma, being in the case of India a law of the Indian legislature".

In section one hundred and thirty-seven,—in paragraph (4) after the words "the Governor-General" there shall be inserted the words "or, in the case of officers serving in Burma, the Governor"; after the words "an officer serving in India" there shall be inserted the words "or Burma", and for the words "in Council" there shall be substituted the words "or, as the case may be, for Burma".

In section one hundred and forty-three,—in sub-section (1) for the words "the legislature or other authority in India or any colony" there shall be substituted the words "any legislature or other authority in India, Burma or a colony".

In section one hundred and fifty-four,—in paragraph (5) after the word "India" there shall be inserted the words "or Burma", and in paragraph (7) after the word "India" there shall be inserted the word "Burma".

In section one hundred and fifty-six,—in sub-section (8) after the words "the Governor-General of India" there shall be inserted the words "or the Governor of Burma"; for the words "by any law or Ordinance to reduce" there shall be substituted the words "to provide for reducing"; and after the words "such Governor-General" there shall be inserted the word "Governor".

In section one hundred and sixty-two,—in sub-section (3) for the words "supreme court in India" there shall be substituted the words "High Court in India or Burma".

In section one hundred and sixty-three,—in paragraph (*d*) of sub-section (1) after the words "Governor-General of India" there shall be inserted the words "and, if in Burma, by some office under the Governor of Burma"; and in sub-section (2), after the word "India" there shall be inserted the words "or Burma".

In section one hundred and sixty-eight, after the word "India" there shall be inserted the word "Burma".

In section one hundred and sixty-nine, after the words "the Governor-General of India" there shall be inserted the words "and the Governor of Burma"; the words "by law" shall be omitted, and after the words "appear to the Governor-General" there shall be inserted the word "Governor".

In section one hundred and seventy,—in sub-section (3) for the words "supreme court in India" there shall be substituted the words "High Court in India or Burma", and after the words "such Indian" there shall be inserted the word "Burma".

In section one hundred and seventy-five, in paragraph (4) for the words "and of India" there shall be substituted the words "India and Burma";

in paragraph (7) after the words "Governor-General of India" there shall be inserted the words "or of the Governor of Burma"; and

in paragraph (12) after the word "India" in both places where it occurs, there shall be inserted the word "Burma".

In section one hundred and seventy-six, -in paragraph (3) for the words "and of India" there shall be substituted the words "India and Burma"; and

in paragraph (11) after the word "India" in both places where it occurs, there shall be inserted the word "Burma".

In section one hundred and seventy-seven, for the words "in India or in a colony" there shall be substituted the words "in India, Burma or a colony", and after the words "of India" wherever those words occur, there shall be inserted the word "Burma".

In section one hundred and eighty, in sub-section (1) after the word "India" wherever it occurs, there shall be inserted the words "or Burma", and in sub-section (3), after the word "India" there shall be inserted the words "or Burma".

In section one hundred and eighty-one, in sub-section (1) after the word "India" there shall be inserted the word "Burma".

In section one hundred and ninety, -for paragraph (21) the following paragraphs shall be substituted:

"(21) The expression 'British India' means all territories for the time being comprised within the Governors' Provinces and the Chief Commissioners' Provinces, and the expression 'India' means British India together with all territories of any Indian Ruler under the suzerainty of His Majesty, all territories under the suzerainty of any such an Indian Ruler, the tribal areas and any other territories which His Majesty in Council may from time to time after ascertaining the views of the Federal Government and the Federal Legislature, declare to be part of India.

(21A) The expression 'Burma' includes (subject to the exercise by His Majesty of any powers vested in him with respect to the alteration of the boundaries thereof) all territories which were immediately before the first day of April, nineteen hundred and thirty-seven, comprised in India, being territories lying to the east of Bengal, the State of Manipur, Assam and any tribal areas connected with Assam, and the expression 'British Burma' means so much of Burma as belongs to His Majesty.

(21B) The expressions 'tribal areas' and 'Ruler' have for the purposes of the foregoing definitions, the same meanings as they have in the Government of India Act, 1935";

in paragraph 23(A) after the words "of British India" there shall be inserted the words "of British Burma";

in paragraph (24) for the words "or India" there shall be substituted the words "India or Burma";

in paragraph (30) the words from the beginning to "chief court and" shall be omitted;

in paragraph (33) after the word "India" there shall be inserted the words "or Burma", and

in paragraph (35) after the word "India" there shall be inserted the word "Burma".

(*b*) *Adaptations of the Army Act.*

In section one hundred and seventy-five,—in paragraph (7) after the words "native of India" there shall be inserted the words "or Burma" and after the words "to Indian military law" there shall be inserted the words "or, as the case may be, to Burma military law, but in either case"; and in paragraph (11) after the word "India" there shall be inserted the word "Burma".

In section one hundred and seventy-six,—in paragraph (8A) after the word "India" there shall be inserted the word "Burma"; in paragraph (10) after the words "Indian military law" in the first place where those words occur there shall be inserted the words "or consisting partly of His Majesty's Burma forces subject to Burma military law"; after the words "natives of India" there shall be inserted the words "or, as the case may be, natives of Burma", and at the end of the paragraph there shall be added the words "or, as the case may be, to Burma military law".

In section one hundred and eighty, for sub-section (2) the following sub-section shall be substituted:—

"(2) In the application of this Act to His Majesty's Indian forces and His Majesty's Burma forces (hereafter in this section referred to as the Indian forces and the Burma forces respectively) the following modifications shall be made:—

(*a*) nothing in this Act shall prejudice or affect the Indian military law respecting officers or soldiers belonging to or followers in the Indian forces, being natives of India, or the Burma military law respecting officers or soldiers belonging to or followers in the Burma forces, being natives of Burma, and on the trial of all offences committed by any such officer, soldier or follower, reference shall be had to the Indian military law or, as the case may be, the Burma military law for such officers, soldiers or followers, and to the established usages of the service, but courts martial for such trials may be convened in pursuance of this Act;

(*b*) Indian military law or, as the case may be, Burma military law shall extend to such officers, soldiers and followers as aforesaid wherever they are serving;

(*c*) the Governor-General of India may suspend the proceedings of any court martial held in India on an officer or soldier belonging to the Indian forces or to the Burma forces, and the Governor of Burma may suspend the proceedings of any court martial held in Burma on any such officer or soldier;

(*d*) an officer belonging to the Indian forces who thinks himself wronged by his commanding officer and on due application made to him does not receive the redress to which he considers himself entitled may complain to the Governor-General of India, who shall cause his complaint to be enquired into and if so desired by the officer shall make a report through the Secretary of State to His Majesty in order to receive the directions of His Majesty thereon;

(*e*) a court martial or, where the case is dealt with summarily under the provisions of this Act, the authority having power so to deal with the case may sentence an officer belonging to the Indian forces to forfeit all or any part of his service for the purposes of promotion and, in addition, if the court or authority thinks fit, to be severely reprimanded or reprimanded;

(*f*) the Governor-General of India in the case of the Indian forces, and the Governor of Burma in the case of the Burma forces, may reduce any warrant officer to a lower grade of warrant rank, or may remand any such warrant officer to regimental duty in the regimental rank held by him immediately before his appointment to be a warrant officer;

(*g*) the provisions of this Act relating to warrant officers shall apply to hospital apprentices in India or Burma although not appointed by warrant;

(*h*) Part II of this Act shall not apply to the Indian forces or the Burma forces, but persons may be enlisted and attested in India or Burma for medical service or for other special service in the Indian forces or the Burma forces for such periods, by such persons and in such manner as may be from time to time authorised by the Governor-General or the Governor of Burma."

In section one hundred and ninety,—in paragraph (8) for the words "and His Majesty's Indian forces" there shall be substituted the words "His Majesty's Indian forces and His Majesty's Burma forces".

For paragraph (22) there shall be substituted the following paragraph:—

"(22) The expressions 'native of India' and 'native of Burma' mean respectively a person triable and punishable under Indian military law or Burma military law."

(c) Adaptations of the Air Force Act.

In section one hundred and seventy-five,—in paragraph (11A) after the words "in India" there shall be inserted the words "or Burma"; after the words "outside India" there shall be inserted the words "or, as the case may be, outside Burma", and after the words "of India" there shall be inserted the words "or, as the case may be, by the Air Council and the Governor of Burma".

In section one hundred and seventy-six,—in paragraph (8B) after the words "in India" there shall be inserted the words "or Burma"; after the words "outside India" there shall be inserted the words "or, as the case may be, outside Burma", and after the words "of India" there shall be inserted the words "or, as the case may be, by the Air Council and the Governor of Burma".

In section one hundred and eighty-four B, after the words "in India" there shall be inserted the words "or Burma", and after the words "of India" there shall be inserted the words "or, as the case may be, by the Air Council and the Governor of Burma".

PART IV.

ENACTMENTS RELATING TO INDIAN RAILWAYS.

The Indian Guaranteed Railways Act, 1879.

(42 & 43 Vict. c. 41.)

In section one, after the words "the Secretary of State for India in Council" (where those words first occur) there shall be inserted the words "the Federal Railway Authority or any Government in British India"; after those words in the second place where they occur, there shall be inserted the words "or any Government in British India"; the words "and belonging to the Secretary of State for India in Council, or" and the words "belonging or" (in both places where they occur) shall be omitted; and at the end of the section there shall be added the following paragraphs—

"The term 'the General Controlling Authority' means, in relation to a Federal Railway, the Federal Railway Authority, in relation to a minor railway, the Provincial Government, and in relation to an Indian State Railway, the Governor-General acting in his discretion";

"The terms 'Federal Railway,' 'Indian State Railway,' 'minor railway' and 'Federal Railway Authority' have the meanings respectively assigned to them in the Government of India Act, 1935, except that, as respects the period before the establishment of the Federal Railway Authority, the term 'Federal Railway Authority' means the Governor-General."

In section two, for the words "the Secretary of State for India in Council", where they first occur, there shall be substituted the words "the Federal Railway Authority or any Government in British India"; for the words "with the sanction of the Secretary of State for India in Council" there shall be substituted the words "with the sanction of the General Controlling Authorities of all the railways concerned".

In section three, for the words "the Secretary of State for India in Council" the words "the Secretary of State", and "the Secretary of State in Council" wherever they occur there shall be substituted the words "the Governor-General".

In section four, for the words "with the sanction of the Secretary of State for India in Council" there shall be substituted the words "with the sanction of the General Controlling Authority"; for the words "with the Secretary of State for India in Council" there shall be substituted the words "with the Federal Railway Authority or any Government in British India"; and for the words "by laws and regulations made by the Governor-General in Council" there shall be substituted the words "by or under the law in force in British India."

Section five shall be omitted.

The East India Unclaimed Stock Act, 1885.

(48 & 49 Vict. c. 25.)

At the end of section twenty-two there shall be added the following paragraph:—

> "The powers conferred by this section on the Secretary of State (including the power to make regulations) shall, after the coming into force of section one hundred and ninety-nine of the Government of India Act, 1935, instead of being exercised by the Secretary of State, be exercised in accordance with the provisions of that section."

In section twenty-three for the words "the Secretary of State" there shall be substituted the words "the Governor-General".

The Indian Railways Act, 1894.

(57 & 58 Vict. c. 12.)

In section two, after the words "the expression 'the Secretary of State' means" there shall be inserted the words "as respects the period before the commencement of Part III of the Government of India Act, 1935".

Private Railway Acts.

Any power conferred by any Private Act on a Railway Company to make and carry out contracts with the Secretary of State in Council shall be deemed to include a power to make and carry out contracts with the Federal Railway Authority (as defined in the Indian Guaranteed Railways Act, 1879) or any Government in British India for the like purposes; references in any Private Act relating to railways in India to the Secretary of State in Council in relation to contracts or anything to be done in relation to contracts shall, where the context and the circumstances so admit or require, be construed as including references to that Authority or any such Government; any provision in any such Act requiring the previous sanction of the Secretary of State in Council to the payment of any portion of the remuneration of a director of a railway company as part of the working expenses of the company shall be construed as requiring the previous sanction of the Governor-General thereto; and any provision in any such Act vesting any property in the Secretary of State in Council shall be construed as having vested that property in His Majesty for the purposes of the Government of India.

General and Private Railway Acts.

So much of any enactment relating to railways in India, whether contained in a Public General Act or a Private Act, as directs the Secretary of State in Council to hold unclaimed moneys subject to the claims of persons entitled thereto or authorises him to apply such moneys as part of the revenues of India, or to apply them as part of the revenues of India or otherwise as he thinks fit, shall be construed as requiring the Secretary of State to treat such moneys (subject to any claims which may be established thereto in accordance with the relevant enactment) as part of the revenues of the Governor-General in Council or, after the establishment of the Federation of India, as part of the revenues of the Federation.

THE GOVERNMENT OF INDIA (ADAPTATION OF INDIAN LAWS) ORDER, 1937.

AT THE COURT AT BUCKINGHAM PALACE,

The 18th day of March, 1937.

PRESENT:

THE KING'S MOST EXCELLENT MAJESTY IN COUNCIL.

Whereas by section two hundred and ninety-three of the Government of India Act, 1935 (hereafter in the recitals to this Order referred to as "the Act") His Majesty is empowered by Order in Council to provide that as from such date as may be specified in the Order any law in force in British India or in any part of British India shall, until repealed or amended by a competent legislature or other competent authority, have effect subject to such adaptations and modifications as appear to His Majesty to be necessary or expedient for bringing the provisions of that law into accord with the provisions of the Act:

And whereas a draft of this Order has been laid before Parliament in accordance with the provisions of sub-section (1) of section three hundred and nine of the Act and an Address has been presented to His Majesty by both Houses of Parliament praying that an Order may be made in the terms of this Order:

Now, therefore, His Majesty, in the exercise of the said powers and of all other powers enabling him in that behalf, is pleased by and with the advice of His Privy Council to order, and it is hereby ordered, as follows:

1. This Order may be cited as the Government of India (Adaptation of Indian Laws) Order, 1937, and shall come into operation on the first day of April, nineteen hundred and thirty-seven.

2. (1) In this Order the expression "Indian law" means a law as defined in section two hundred and ninety-three of the Act.

(2) The Interpretation Act, 1889, applies for the interpretation of this Order as it applies for the interpretation of an Act of Parliament.

3. The Indian laws mentioned in the Schedules to this Order shall, until repealed or amended by a competent Legislature or other competent authority, have effect subject to the adaptations and modifications directed by those Schedules to be made therein or, if it is so directed, shall cease to have effect.

4. (1) Whenever an expression mentioned in the first column of the table hereinunder printed occurs (otherwise than in a title or preamble or in a citation or description of an enactment) in a Central

or Provincial Act or Regulation, whether an Act or Regulation mentioned in the Schedules to this Order or not, then, unless that expression is by this Order expressly directed to be otherwise adapted or modified, or to stand unmodified or to be omitted, there shall be substituted therefor the expression set opposite to it in column two of the said table.

Table of General Adaptations.

1.	2.
Governor-General of India in Council: Governor-General of India: Governor-General in Council: Governor-General: Government of India.	Central Government.
Governor in Council: Governor (except in the expression "Governor's Province"): Lieutenant Governor in Council: Lieutenant Governor: Chief Commissioner (except in the expression "Chief Commissioner's Province"): Local Government: Local Administration.	Provincial Government.
Gazette of India: local official Gazette: local gazette: any other expression denoting a gazette in which official notices of a government are published, not being the gazette of a district or other sub-division of a Province.	Official Gazette.

Any reference to the Governor (*or* Lieutenant Governor) of a named Province in Council shall be treated for the purposes of this paragraph as if it were a reference to the Governor (*or* Lieutenant Governor) in Council of that Province.

(2) A direction in the Schedules to this Order that a specified Indian law or section or portion of an Indian law shall stand unmodified shall be construed merely as a direction that it is not to be modified or adapted in accordance with the foregoing provisions of this paragraph.

5. (1) Where this Order requires that in any specified Indian law, or in any section or other portion of an Indian law, certain words shall be substituted for certain other words or that certain words shall be omitted, that substitution or omission, as the case may be, shall, except where it is otherwise expressly provided, be made wherever the words referred to occur in that law or, as the case may be, in that section or portion.

(2) Where this Order requires that in any Indian law a plural noun shall be substituted for a singular noun or vice versa, or a masculine noun for a neuter noun or vice versa, there shall be made also in any verb or pronoun in the sentence in question such consequential amendment as the rules of grammar may require.

6. (1) The following provisions shall have effect where any Indian law which under this Order is to be adapted or modified has before the commencement of this Order been amended, either generally or

in relation to any particular area, by the insertion or omission of words, or the substitution of words for other words—

(a) effect shall first be given in the amending law to any adaptation or modification required by paragraphs three and five of this Order to be made therein;

(b) the original law shall then be amended, either generally or, as the case may be, in its application to the particular area, so as to give effect to the directions contained in the amending law or, where any adaptation or modification has fallen to be made under sub-paragraph (a), in that law as so adapted or modified; and

(c) all adaptations or modifications required by this Order to be made in the original law shall then be made in that law as so amended, except so far as in the case of any particular area they may be inapplicable

(2) In this paragraph references to the amendment of a law by the insertion or omission of words or the substitution of words do not include references to an amendment which is effected merely by directing that certain words shall be construed in a particular manner.

7. Subject to the foregoing provisions of this Order, any reference by whatever form of words in any Indian law in force immediately before the commencement of this Order to an authority competent at the date of the passing of that law to exercise any powers or authorities, or discharge any functions, in any part of British India shall, where a corresponding new authority has been constituted by or under any Part of the Government of India Act, 1935, for the time being in force, have effect until duly repealed or amended as if it were a reference to that new authority.

8. In any Indian law in force immediately before the commencement of this Order any reference by name or description to any territory shall, unless the contrary intention appears or unless it has been, or is by this Order, otherwise expressly provided, be construed as a reference to the territory which bore that name or answered to that description at the date when the enactment containing that name or description came into operation:

Provided that in the application of any enactment to Madras, Bombay, Bihar or the Central Provinces, references in that enactment to Madras, Bombay, Bihar or the Central Provinces, as the case may be, shall be construed as exclusive of so much of those Provinces respectively as was separated therefrom on the constitution of the Provinces of Orissa and Sind.

9. The provisions of this Order which adapt or modify Indian laws so as to alter the manner in which, the authority by which, or the law under or in accordance with which, any powers are exercisable, shall not render invalid any notification, order, commitment, attachment, byelaw, rule or regulation duly made or issued, or anything duly done, before the commencement of this Order; and any such notification, order, commitment, attachment, byelaw, rule, regulation or thing

may be revoked, varied or undone in the like manner, to the like extent and in the like circumstances as if it had been made, issued or done after the commencement of this Order by the competent authority and under and in accordance with the provisions then applicable to such a case.

10. Save as provided by this Order, all powers which under any law in force in British India, or in any part of British India, were immediately before the commencement of Part III of the Government of India Act, 1935, vested in, or exercisable by, any person or authority shall continue to be so vested or exercisable until other provision is made by some legislature or authority empowered to regulate the matter in question

11. Nothing in this Order shall affect the previous operation of, or anything duly done or suffered under, any Indian law, or any right, privilege, obligation or liability already acquired, accrued or incurred under any such law or any penalty, forfeiture or punishment incurred in respect of any offence already committed against any such law.

12. For the avoidance of doubt it is hereby declared that—

(*a*) nothing in this Order transferring or assigning any functions to the Central Government shall be construed as excluding those functions from the operation of section one hundred and twenty-three or section one hundred and twenty-four of the Government of India Act, 1935;

(*b*) the transfer by this Order to a Provincial Government of any jurisdiction theretofore exercisable by the local Government of the Province shall not be construed as excluding that jurisdiction from the operation of sub-section (2) of section two hundred and ninety-six of the said Act;

(*c*) nothing in this Order shall affect the provisions of any Order in Council for the time being in force made under section one hundred and fifty-eight, section one hundred and fifty-nine or section one hundred and sixty of the said Act (which empower Orders to be made regulating the relations of India and Burma as to their monetary systems, relief from double taxation, customs, and ancillary and related matters), or under any corresponding provisions in the Government of Burma Act, 1935; and

(*d*) no repeal effected by this Order shall affect the operation of sub-paragraph (2) of paragraph fifteen of the Government of India (Commencement and Transitory Provisions) Order, 1936.

M. P. A. Hankey.

FIRST SCHEDULE.

CENTRAL ACTS.

The Secretaries to Government Act, 1834.

(II of 1834.)

For "the Secretaries to the Governments of Fort St. George and Bombay" substitute "the Secretaries to the Provincial Governments of Madras and Bombay".

The Bombay Coasting Vessels Act, 1838.

(XIX of 1838.)

Section 4.—For "Government of Bombay" substitute "Central Government"

Section 6.—For the second "Government of Bombay" substitute "Central Government"

Section 11.—For "the Governor of Bombay in Council" and "the Government of Bombay" substitute "the Central Government", and at the end of the section insert—

"Provided that any such fees as immediately before the commencement of Part III of the Government of India Act, 1935, were, under this Act as then in force to be carried to the credit of the Local Government shall be paid to such officer as the Provincial Government may appoint and be carried to the credit of that Government"

Section 14.—For "Governor of Bombay in Council" and "Governor in Council" substitute "Central Government".

The Bombay Haqqa Prohibition Act, 1839.

(XX of 1839.)

Sections 1 and 2.—For "Governor in Council of Bombay" substitute "appropriate Government".

Section 3.—For "of Government" substitute "of the Crown".

After section 3 insert—

4. In this Act, "the appropriate Government" means the Central Government or the Provincial Government according as the matter in question falls within List 1, or Lists II and III, in the Seventh Schedule to the Government of India Act, 1935". "Interpretation.

The Ganjam and Vizagapatam Act, 1839.

(XXIV of 1839.)

Section 3.—For the words from "section which are now" to end of the section substitute "section which are included in any district shall be vested in the Collector of that district, and shall be exercised by him as Agent for the Provincial Government concerned".

Section 4.—For "Governor in Council of Fort St. George, by an order in Council" substitute "Provincial Governments respectively concerned" and for "Sadr Adalat" and "Faujdari Adalat" substitute "High Court".

Section 5.—For "either" substitute "any", and for "Faujdari Adalat" substitute "High Court".

Section 6.—For "either" substitute "any" and for "Court of Sadr Adalat" substitute "High Court".

Section 7.—For "Governor of Fort St. George in Council" and "Governor in Council of Fort St. George" substitute "Provincial Government"; after "Madras Code" insert "or Regulation III of 1818 of the Bengal Code, as the case may be"; for "that Regulation" substitute "those Regulations respectively" and for "either of such Agents" substitute "the Agent".

Section 8.—For "Governor in Council of Fort St. George, by and order in Council" substitute "Provincial Government, by order".

The Bombay Regulation XIII of 1830 (Application) Act, 1840.

(XV of 1840.)

For "Governor in Council of Bombay" substitute "Provincial Government".

The Indian Registration of Ships Act, 1841.

(X of 1841.)

Section 2.—For "subordinate to the Local Governments of India as such Governments respectively" substitute "in British India as the Central Government".

Section 3.—For "Local Governments" substitute "Central Government" and omit "for the ports under their respective Presidencies".

Section 4.—For "the Government of the Presidency to which he is subordinate" substitute "the Central Government".

Section 5.—For "a subject (or subjects) of Her Majesty for whom the Governor General of India in Council has power to legislate" substitute "a British subject (or British subjects)"; and in the proviso for "the Local Government to which he is subordinate" substitute "the Central Government".

Section 7.—For "the Local Governments respectively" substitute "the Central Government".

Sections 15, 16 and 21.—For "the territories of the East India Company" substitute "British India".

Section 24. For "a Native Prince or State, or by any subject of such Native Prince or State as aforesaid" substitute "an Indian State or by the Ruler or any subject thereof"; for "a Local Government" substitute "the Central Government"; for "the dominions of such Native Prince or State and owned by such Prince or State or by any of their subjects" substitute "any Indian State and owned by that State or by the Ruler or any subject thereof"; for "Native Princes or States or their subjects" substitute "Indian States or the Rulers or subjects thereof" and for "a subject of Her Majesty for whom the Governor General in Council has power to legislate" substitute "a British subject".

Omit section 27.

The Madras Inland Customs Act, 1844.

(VI of 1844.)

Throughout the Act for "said Governor in Council" substitute "Central Government".

Section 8.—For "the territory of the East India Company" substitute "British India".

Section 9. For "the East India Company's territories" substitute "British India".

Section 13.—For "Government" substitute "Central Government".

The Bengal Alluvion and Diluvion Act, 1847.

(IX of 1847.)

Section 2.—For "as is" substitute "as was on the 8th May 1847".

Section 3. For "Government of Bengal" substitute "Provincial Government".

Section 9. For "Government" substitute "Crown".

The Madras Revenue Commissioner Act, 1849.

(X of 1849.)

Section 1.—For "Governor of Fort St. George in Council" substitute "Provincial Government of Madras".

The Indian Registration of Ships Act (1841) Amendment Act, 1850.

(XI of 1850.)

Section 2.—For the words from "the dominions" to "Company" substitute "any Indian State" and for "such Native Prince or State or their subjects" substitute "Indian State or the Ruler or a subject thereof".

Section 3.—For "such Native Princes or States or by their subjects" substitute "an Indian State or the Ruler or a subject thereof"; omit "the Continent of"; after "Ceylon" insert "or Burma"; and for "the Governor or Governor in Council of each Presidency" substitute "the Central Government".

Section 4.—For "be carried to the credit of the Government of the Presidency in which they are levied" substitute "subject to the provisions of section 143 (2) of the Government of India Act, 1935, be carried to the credit of the Central Government".

The Public Accountants' Default Act, 1850.

(XII of 1850.)

Section 2.—Omit "subject to the approval of the Governor or Governor in Council of the Presidency or place".

For section 3 substitute:—

"'Public accountant' defined.

3. For the purposes of sections 1 and 2 of this Act, the expression 'public accountant' means any person who, as Official Assignee or Trustee, or as sarbarahkar, is entrusted with the receipt, custody or control of any moneys or securities for money, or the management of any lands belonging to any other person or persons; and for the purposes of sections 4 and 5 of this Act the expression shall also include any person who, by reason of any office held by him in the service of the Crown in India, is entrusted with the receipt, custody or control of any moneys or securities for money, or the management of any lands belonging to the Crown".

The Apprentices Act, 1850.

(XIX of 1850.)

Section 23.—For "the territories under the Government of India" substitute "British India"; and for "Magistrates of India" substitute "Magistrates of British India".

The Calcutta Land Revenue Act, 1850.

(XXIII of 1850.)

Throughout the Act for "East India Company" substitute "Crown".

The State Prisoners Act, 1850.

(XXXIV of 1850.)

Omit the preamble.

For section 1 substitute:—

1. (1) The warrant of commitment of any State prisoner, under the Bengal State Prisoners Regulation, 1818, may, if it is issued by virtue of the powers conferred by that Regulation on the Central Government, be directed to the commandant of any fortress, or the officer in charge of any jail or place, anywhere in any Governor's Province or Chief Commissioner's Province and may, if it is issued by virtue of the powers conferred by that Regulation on Provincial Governments, be directed to the commandant of any fortress or the officer in charge of any jail or place, anywhere within the Province in question; but any such warrant issued under that Regulation, whatever the powers by virtue of which it is issued, shall be sufficient authority for the arrest of the State prisoner anywhere in any Governor's Province or Chief Commissioner's Province and for his detention until he can be handed over to the commandant or officer to whom the warrant is directed, or dealt with in accordance with sub-section (1) of section five of the State Prisoners Act, 1858:

'Persons to whom warrants of commitment may be addressed and effect of warrants of commitment.

Provided that a State prisoner shall not be arrested under a warrant issued by virtue of the powers conferred by the said Regulation on Provincial Governments, except with the consent of the Government of the Province in which he is arrested.

(2) This section applies throughout British India (including Berar)."

Omit section 2.

The Public Servants (Inquiries) Act, 1850.

(XXXVII of 1850.)

Section 2.—For "shall" where it occurs for the second and third times substitute "may".

For section 23 substitute:—

23. In this Act, "the Government" means the Central Government in the case of persons employed under that Government and the Provincial Government in the case of persons employed under that Government."

"Definition of Government.

The Indian Tolls Act, 1851.

(VIII of 1851.)

Before section 2 insert:—

1A.—This Act extends to the territories administered on the fourth of July, eighteen hundred and fifty-one by the Governor of the Presidency of Fort William in Bengal, the Lieutenant-Governor of North-Western Provinces of Bengal and the Governor of the Presidency of Fort St. George in Council."

"Extent.

Section 2.—For the words from the beginning to "Fort St. George in Council" substitute "The Provincial Government" and for "at the expense of the Government" substitute "at the expense of the Central or any Provincial Government".

Section 8.—Omit all the words after "public revenue".

The Madras City Land Revenue Act, 1851.

(XII of 1851.)

Throughout the Act for "East India Company" substitute "the Crown".

The Sheriffs' Fees Act, 1852.

(VIII of 1852.)

Sections 1 to 7 shall cease to have effect.

The Bombay Rent-free Estates Act, 1852.

(XI of 1852.)

Section 2.—For "Governor of Bombay in Council" substitute "Provincial Government".

Schedule A.—In rule 1 for "of Government" substitute "of the Provincial Government".

In rule 2 for "the Governor of Bombay in Council" substitute "the tribunal constituted under section 296 (2) of the Government of India Act, 1935".

In rule 11 for "of Government" substitute "of the Provincial Government".

In rule 13 for "the Governor of Bombay in Council" substitute "the Provincial Government".

Schedule B.—In rule 1 for "the Governor of Bombay in Council" and "the said Governor in Council" substitute "the Provincial Government".

In rule 2 for "by Government" substitute "by the Provincial Government".

In rule 4, provision third, for "by Government" substitute "by the Provincial Government".

In rule 9, for "Government" substitute "the Crown".

In rule 10, for the first "Government" substitute "the Crown" and for the second "Government" substitute "the Provincial Government".

In rule 11, for "the Governor of Bombay in Council" substitute "the Provincial Government".

The Rent Recovery Act, 1853.

(VI of 1853.)

Section 5.—For "Government" substitute "the Provincial Government".

The Shore Nuisances (Bombay and Kolaba) Act, 1583.

(XI of 1853.)

Section 6.—For "Governor of Bombay in Council" substitute "Central Government".

The Bengal Bonded Warehouse Act, 1854.

(V of 1854.)

Section 6.—For "Governor of the Presidency of Fort William in Bengal" substitute "Central Government".

The Act to Amend Bengal Regulation XI of 1831.

(XVI of 1854.)

Section 3.—Omit from "and all powers" to "North-Western Provinces".

The Conveyance of Land Act, 1854.

(XXXI of 1854.)

Section 13.—For "the territories under the Government of India" substitute "British India".

The Mortgaged Estates Administration Act, 1855.

(XXIII of 1855.)

Section 1.—For "the territories in the possession of, and under the Government of the East India Company" substitute "British India".

The Penal Servitude Act, 1855.

(XXIV of 1855.)

Section 1.—For "the territories under the Government of India" substitute "British India".

Sections 2 and 4.—For "the said territories" substitute "British India".

The Bengal Embankment Act, 1855.

(XXXII of 1855.)

Section 2.—For "Government" substitute "the Crown".

Section 3. For "Government" substitute "the Provincial Government".

Section 4.—For "Government" substitute "the Crown".

Section 5.—In clause (v) for "Government" substitute "the Provincial Government".

Section 6.—For "Government" substitute "the Crown".

Section 7.—In clause (xii) for "Government" substitute "the Crown".

Section 8.—In clause (i) for the first "Government" substitute "the Crown" and for the second "Government" substitute "the Provincial Government".

Section 10.—For "Government" substitute "the Crown".

Section 11.—In clause (i) for "Government" substitute "the Provincial Government".

Section 18.—For the words from "the Regulations" to the end of the section substitute "any law for the time being in force".

The Santhal Parganas Act, 1855.

(XXXVII of 1855.)

Section 1.—The first "Governor General of India in Council" shall stand unmodified.

For "no law which shall hereafter be passed by the Governor General of India in Council" substitute "no Central Act passed before the commencement of Part III of the Government of India Act, 1935".

For "Lieutenant Governor of Bengal" and "said Lieutenant Governor" substitute "Provincial Government".

Section 3.—For "said Lieutenant Governor" substitute "Provincial Government".

The European Deserters Act, 1856.

(XI of 1856.)

Sections 2 and 5.—For "the territories of the East India Company" substitute "British India".

The Civil Courts Amins Act, 1856.

(XII of 1856.)

Section 2.—For the second paragraph substitute—

"The number of Amins to be employed in each district shall be determined by the Provincial Government."

Section 3.—For the words from "Civil Court Amins" to "attach them" substitute "District Judge shall, from time to time, attach the Civil Court Amins".

Section 9.—For "Government" substitute "the revenues of the Provinces".

The Bengal Chaukidari Act, 1856.

(XX of 1856.)

Section 3.—For "Government" substitute "Provincial Government".

Section 32.—For the first "Magistrate" substitute "Provincial Government".

Sections 33 and 34.—For "Subject to the approval of the Commissioner, the Magistrate" substitute "The Provincial Government".

Section 50.—For "in the General Regulations of the Bengal Code or Acts of the Government of India" substitute "by any law".

The Calcutta University Act, 1857.

(II of 1857.)

Section 1.—For "the territories under the Government of India" substitute "British India".

For section 4 substitute—

"4. Such person as the Governor General, exercising his individual judgment, may appoint, shall be the Chancellor of the said University". Chancellor.

Sections 5, 7 and 15.—For "Local Government of Bengal" substitute "Central Government".

The Tobacco Duty (Town of Bombay) Act, 1857.

(IV of 1857.)

Section 7.—Omit "of Bombay".

Section 11.—For "Government" substitute "the Provincial Government".

At the end of the Act insert—

"22. In this Act, 'Government' means, so long as the municipal duty is, by virtue of section 143 (2) of the Government of India Act, 1935, levied and collected by the Provincial Government, that Government, and thereafter the Central Government." Meaning of "Government".

The Madras Uncovenanted Officers Act, 1857.

(VII of 1857.)

Section 1.—For "Governor of Fort St. George in Council" substitute "Provincial Government of Madras", and for "said Presidency" substitute "Province".

Omit section 6.

The Opium Act, 1857.

(XIII of 1857.)

Sections 3 to 8.—For "Government" substitute "the Central Government".

Section 10.—For "Government" substitute "the Crown".

Sections 11, 12, 13, 15, 19 and 20.—For "Government" substitute "the Central Government".

Section 23.—For the first "Government" substitute "the Crown" and for the second "Government" substitute "the Central Government".

Section 26.—For "Government" substitute "the Central Government".

Section 29.—For "Government" substitute "the Crown".

Section 31.—Omit the first "of Government"; for the second, third and fourth "of Government" substitute "of the Crown" and for "the Government" substitute "the Central Government".

Omit section 32.

The Howrah Offences Act, 1857.

(XXI of 1857.)

Omit section 57.

The Bombay Land Customs Act, 1857.

(XXIX of 1857.)

Throughout the Act for "Governor in Council" substitute "Central Government".

Section 12.—For "the Government" and "Government" substitute "the Central Government ".

The State Prisoners Act, 1858.

(III of 1858.)

Omit the preamble and section 2.

For section 3 substitute:—

"Persons to whom warrants of commitment may be addressed and effect of warrants of commitment.

3. The provisions of section one of the State Prisoners Act, 1850 (which relate to the persons to whom warrants of commitment under the Bengal State Prisoners Regulation, 1818, may be addressed, and the effect of such warrants) shall apply in relation to warrants of commitment under Regulation II, 1819, of the Madras Code, and Regulation XXV, 1827, of the Bombay Code, as they apply in relation to warrants of commitment issued under the Bengal State Prisoners Regulation, 1818, by virtue of the powers conferred thereby on Provincial Governments."

For section 5 substitute:—

"5. (1) A state prisoner who is or is to be confined in any Province under the provisions of any of the said Regulations for reasons connected with the maintenance of public order therein may, by arrangement between the Provincial Governments concerned, be transferred to or, as the case may be, retained in another Province and confined in that other Province in accordance with that one of the said Regulations which is in force in that other Province in all respects as if reasons connected with the maintenance of public order in that other Province required his confinement therein

Removal of State prisoners from one Province to another Province.

(2) Nothing in this section shall be construed as limiting the power of the Central Government to transfer State prisoners from one place of confinement in a Governor's Province or a Chief Commissioner's Province to another place of confinement in that or any other Province, or the power of a Provincial Government to transfer State prisoners from one place of confinement in the Province to another place of confinement in the Province"

After section 5, insert the following section:—

"6. This Act extends to the whole of British India (including Berar)."

Extent.

The Bengal Ghatwali Lands Act, 1859.

(V of 1859.)

Section 2.—For "Government" substitute "the Crown."

The Forfeiture Act, 1850.

(IX of 1859.)

Section 18.—For "discharge by order of Government" substitute "duly discharged".

The Bengal Rent Act, 1859.

(X of 1859.)

Sections 29, 73 and 76.—For "Government" substitute "the Crown".

Sections 132 and 165.—For "Government" substitute "the Provincial Government".

Section 166.—For "Government" substitute "the Crown".

Section 168. For "Executive" substitute "Provincial".

The Bengal Land-Revenue Sales Act, 1859.

(XI of 1859.)

Section 8. For the first "Government" substitute "the Provincial Government", and for the second "Government" substitute "the Crown".

Section 14.—For "Government" substitute "the Provincial Government".

Section 15.—For "to Government" substitute "to the Provincial Government".

Section 32.—For "the Government" substitute "the Provincial Government".

Section 35.—For "Government" substitute "the Provincial Government."

Section 50.—For "by Government" substitute "by the Provincial Government".

Section 52.—For "Regulations of Government" substitute "law for the time being in force".

Section 58.—For "Government" substitute "Provincial Government."

Sections 60 and 61.—For "Government" substitute "the Provincial Government".

The Moplah Outrages Act, 1859.

(XX of 1859.)

Section 2.—For "of Fort St. George" substitute "of Madras".

The Madras District Police Act, 1859.

(XXIV of 1859.)

Section 4.—Omit "appoint".

Section 5.—Omit from "who shall from time to time" to the end of the section.

Section 8.—Omit "subject to the control of the Governor-General of India in Council" and at the end of the section insert—

"The pay and all other conditions of service of officers of the Subordinate Police shall, subject to the provisions of this Act, be such as may be determined by the Provincial Government."

For section 10 substitute:—

"Dismissal, suspension, or reduction of officers of the Subordinate Police.

10. Subject to such rules as the Provincial Government may, from time to time, make under this Act, the Inspector-General, Deputy Inspectors-General and District Superintendents of Police may at any time dismiss, suspend or reduce to a lower post, or time scale, or to a lower stage in time scale, any officer of the Subordinate Police whom they shall think remiss or negligent in the discharge of his duty or otherwise unfit for the same and may order the recovery from the pay of any such Police Officer of the whole or part of any pecuniary loss caused to Government by his negligence or breach of orders."

Section 11.—For "so appointed" substitute "appointed as an Officer of the Subordinate Police".

Section 13.—For "Inspector-General of Police or any Deputy Inspector-General or any District Superintendent" substitute "Provincial Government", and for "said Inspector-General" substitute "Inspector-General".

Section 15.—Omit from the beginning to "under those sections" and insert "All sums of money payable under the two last preceding sections".

The Societies Registration Act, 1860.

(XXI of 1860.)

Section 3.—For "the Governor-General of India in Council" and "Government" substitute "the Provincial Government".

Section 13. For "whenever the Government" substitute "whenever any Government", and for "without the consent of Government" substitute "without the consent of the Government of the Province of registration".

The Police Act, 1861.

(V of 1861.)

Section 1.—At the end insert the words "References to the subordinate ranks of a police force shall be construed as references to members of that force below the rank of Deputy Superintendent".

Section 2.—Omit "and the members of such force shall receive such pay" and the words from "subject in the case of officers" to the end of the section.

At the end of the section insert

"Subject to the provisions of this Act the pay and all other conditions of service of members of the subordinate ranks of any police force shall be such as may be determined by the Provincial Government".

Section 3.—Omit from "subject in the case of" to "Governor-General of India in Council" and omit "appoint".

Section 4. Omit the last sentence.

Section 7.—For the words from the beginning to "dismiss, suspend or reduce any police officer" substitute—"Subject to such rules as the Provincial Government may from time to time make under this Act, the Inspector-General, Deputy Inspectors-General, Assistant Inspectors-General and District Superintendents of Police may at any time dismiss, suspend or reduce any police officer of the subordinate ranks"; and after "punishments to any police officer" insert "of the subordinate ranks".

Section 8. For "so appointed" substitute "appointed to the police force other than an officer mentioned in section 4".

Section 16.—Omit sub-section (2).

Section 27.—For "at the disposal of Government" substitute "at the disposal of the Provincial Government".

Omit section 41.

Section 46.—For "Governor-General in Council" substitute Provincial Government".

The Stage-Carriages Act, 1861.

(XVI of 1861.)

Section 21.—Omit the definition of "British India".

The Government Seal Act, 1862.

(III of 1862.)

For "any Act of the Governor-General of India in Council" substitute "any Act of the Central Legislature"; and for "the inscription 'Government of India' " substitute "the inscription 'Government of India' or 'Government of the Federation of India' ".

The Excise (Spirit) Act, 1863.

(XVI of 1863.)

Section 2.—At the beginning insert "In each Province", and for "Local Government" substitute "Central Government".

The Religious Endowments Act, 1863.

(XX of 1863.)

For section 24 substitute:—

"India. 24. The word 'India' in this Act shall mean British India."

The Waste Lands (Claims) Act, 1863.

(XXIII of 1863.)

Throughout the Act for "Government" or "the Government" substitute "the Provincial Government".

The Official Gazettes Act, 1863.

(XXIII of 1863.)

This Act shall cease to have effect.

The Foreigners Act, 1864.

(III of 1864.)

Section 1.—Omit the definitions of "British India" and "Local Government".

Section 3.—Omit from "and any Local Government" to the end of the section.

Section 3A.—For "Local Government" substitute "Central Government".

Section 4.—Omit "or by the Local Government under whose order he shall have removed himself or been removed," "or of the Local Government within whose jurisdiction he shall be so apprehended or detained" and "or Local Government".

Section 6.—Omit "or by the Local Government of such place".

For section 11 substitute—

"Grant of licences. 11. Licences under this Act may be granted by the Central Government or by officers specially authorised by that Government."

Section 13.—Omit "or the Local Government" and "or by the Local Government of any part of British India in which all the provisions of this Act are for the time being in force and in which the foreigner holding the same may be".

Section 14.—For "Government" substitute "the Central Government".

Section 15.—For "the Local Government to which he is subordinate" substitute "the Central Government".

For section 17 substitute –

"17. The Central Government may order any person apprehended or detained under the provisions of this Act to remove himself from any part of British India by sea or by such other route as the Central Government may direct; or the Central Government may cause him to be removed from that part of British India by such route and in such manner as to that Government may seem fit." Removal of persons apprehended

Omit section 19.

Section 25 Omit "or the Local Government of any part of British India in which this Act may for the time being be in force".

The Indian Tolls Act, 1864.

(XV of 1864.)

Omit section 4.

The Carriers Act, 1865.

(III of 1865.)

Section 11.—For "Governor-General in Council" substitute "Provincial Government".

The Native Converts' Marriage Dissolution Act, 1866.

(XXI of 1866.)

Section 3. Omit the definition of "High Court".

The Unclaimed Deposits Act, 1866.

(XXV of 1866.)

Section 1.- For "the Government of India for the general purposes of Government" substitute "the Government of the Province in which the court has its principal seat".

Section 4.—For "paid to the Government of India" substitute "paid to any Government" and for "the Government of India shall pay" substitute "the Government of the Province in which that court has its principal seat shall pay".

The Indian Trustees Act, 1866.

(XXVII of 1866.)

Section 2.—For the definition of "High Court" substitute "'High Court' means a court which is a High Court for the purposes of the Government of India Act, 1935".

The Trustees' and Mortgagees' Powers Act, 1866.

(XXVIII of 1866.)

Section 1.—For the definition of "High Court" substitute "'High Court' means a court which is a High Court for the purposes of the Government of India Act, 1935".

The Ganges Tolls Act, 1867.

(1 of 1867.)

Preamble.—Omit from "to be applied" to "Dinapur".

Section 1.—Omit the definition of "Lieutenant-Governor".

After section 1 insert—

"Extent. 1A.—The said Act shall extend only to so much of the United Provinces as on the 18th January, 1867, formed part of the North-Western Provinces of the Presidency of Fort William."

Section 2.—For "subject to the government of the Lieutenant-Governor as he" substitute "as the Provincial Government".

Omit section 4.

Section 9.—For "the Government of India" substitute "the Provincial Government".

Sections 14, 15 and 16.—For "between Allahabad and Dinapur" substitute "below Allahabad".

Section 17.—Omit "and may be disposed of as the Lieutenant-Governor shall from time to time direct".

The Public Gambling Act, 1867.

(III of 1867.)

Section 1.—Omit the definitions of "Lieutenant-Governor" and "Chief Commissioner".

Section 2.—For "the Lieutenant-Governor or the Chief Commissioner, as the case may be" substitute "the Provincial Government".

Section 5.—For "Lieutenant-Governor or the Chief Commissioner" substitute "Provincial Government".

Section 17.—Omit from "and such fines" to the end of the section.

The Oriental Gas Company Act, 1867.

(XI of 1867).

Preamble.—For "Local Government" substitute "Central Government".

Omit section 1.

Section 2.—For "Local Government" substitute "Central Government" and for "within the territories subject to such government" substitute "in British India".

The Sarais Act, 1867.

(XXII of 1867.)

Section 2.—Omit the definition of "Local Government".

Section 17.—For "the territories which are or may be vested in Her Majesty or her successors by the Statute 21 & 22 Vict. cap. 106 (an Act for the better government of India)" substitute "British India".

The Punjab Murderous Outrages Act, 1867.

(XXIII of 1867.)

Section 1.—Omit "with the previous consent of the Governor-General of India in Council" and "and with such consent".

The Press and Registration of Books Act, 1867.

(XXV of 1867.)

Section 1.—Omit the definitions of "British India" and "Local Government".

Section 17.—Omit the second paragraph.

Section 21.—For "The Governor-General in Council or the Local Government may, by notification in the Gazette of India or the Local Gazette, as the case may be," substitute "the Provincial Government may, by notification in the official Gazette".

The Chief Commissioners' Powers Act.

(XXXII of 1867.)

This Act shall cease to have effect.

The Indian Divorce Act.

(IV of 1869.)

Section 2.—For "dominions hereinafter mentioned" substitute "territories hereinafter mentioned" and for "dominions of Princes and States in India in alliance with Her Majesty" substitute "Indian States".

Section 3.—For sub-sections (1) and (2) substitute:—

"(1) 'High Court' means with reference to any area—

(a) in Bengal, Assam and the Andaman and Nicobar Islands, the High Court at Calcutta;

(b) in the Provinces of Madras and Coorg, the High Court at Madras;

(c) in the Province of Bombay and in Panth Piploda, the High Court at Bombay;

(d) in Agra and Ajmer-Merwara, the High Court at Allahabad;

(e) in Oudh, the Chief Court of Oudh;

(f) in the Punjab, the North West Frontier Province, British Baluchistan and Delhi, the High Court at Lahore;

(g) in Bihar and Orissa, the High Court at Patna;

(h) in the Central Provinces and Berar, the High Court at Nagpur;

(i) in Sind, the Court of the Judicial Commissioner in Sind; and

(j) in any Indian State, the Court which is a High Court for the purposes of the Government of India Act, 1935, and exercises original criminal jurisdiction in respect of European British subjects in that area.

In the case of any petition under this Act, "High Court" means the High Court for the area where the husband and wife reside or last resided together.

(2) "District Judge" means—

(a) in a Province, a Judge of a Principal Civil Court of original jurisdiction, however designated; and

(b) in any area in an Indian State, such officer as the Central Government shall from time to time appoint in this behalf by notification in the Official Gazette, and, in the absence of such an officer, the High Court for the area."

For section 17A, substitute:—

"Appointment of officer to exercise duties of King's Proctor.

17A. The Provincial Government of any Province within which any High Court established by Letters Patent exercises jurisdiction, may appoint an officer who shall, within the jurisdiction of the High Court in that Province, have the like right of showing cause why a decree for the dissolution of a marriage should not be made absolute or should not be confirmed, as the case may be, as is exercisable in England by the King's Proctor; and the said Government may make rules regulating the manner in which the right shall be exercised and all matters incidental or to consequential on any exercise of the right.

In relation to the jurisdiction of any such High Court as aforesaid in an Indian State this section shall have effect as if the reference to the Provincial Government was a reference to the Central Government".

The Bombay Civil Courts Act, 1869.

(XIV of 1869.)

Throughout the Act, except as otherwise expressly provided, for "Governor of Bombay in Council" substitute "Provincial Government".

Section 1.—The words to "now in force" shall stand unmodified.

For "any other of the territories under such Government" substitute "any other of the said territories".

Section 5.—Omit from "He shall be appointed" to the end of the section.

Section 14.—Omit "under the general control of the Governor General of India in Council" and omit from "and may suspend" to the end of the section.

Section 21.—Omit "acting under the general control of the Governor General of India in Council".

Section 22.—Omit from "No person" to the end of the section.

Section 23.—In the paragraph beginning "For the purpose of assisting the Judge" for "the Governor of Bombay in Council may appoint to such court" substitute "the High Court may appoint to such court from the members of the Subordinate Civil Judicial Service of the Province".

Section 24.—For "Government" substitute "the Provincial Government".

Section 32.—For "the Secretary of State for India in Council" and "Government" (except in the phrase "Government railway") substitute "the Crown".

Omit sections 33, 34 and 38.

Section 39.—For "the said ministerial officers" substitute "the ministerial officers of the Civil Courts".

Section 40.—For the words "to jurisdiction" substitute "There may be appointed to any Civil Court under this Act".

Omit section 40A.

The Court-Fees Act, 1870.

(VII of 1870.)

After section 1 insert—

"1A. In this Act 'the Appropriate Government' means, in relation to fees or stamps relating to documents presented or to be presented before any officer serving under the Central Government, that Government, and in relation to any other fees or stamps, the Provincial Government." Definition of "Appropriate Government".

Omit section 2, as in force elsewhere than in Bengal.

Section 3.—After "the Government of India Act, 1915", insert "or section 229 of the Government of India Act, 1935."

Sections 26, 27, 34 and 35.—For "Local Government" substitute "Appropriate Government".

Schedule I.—Omit Entry 14.

The Female Infanticide Prevention Act, 1870.

(VIII of 1870.)

Section 7.—Omit "the Governor General of India in Council may by order extend it to any part of the territories (other than Oudh) under the immediate administration of the Government of India and".

The Oudh Taluqdars' Relief Act, 1870.

(XXIV of 1870.)

Section 2.—Omit the definition of "Chief Commissioner".

Sections 4, 5, and 8.—For "to Government" substitute "to the Crown".

Section 20.—Omit "approved by the Governor-General of India in Council and".

The Cattle Trespass Act, 1871.

(I of 1871.)

Section 6.—For the words from the beginning of the section to "removed by such Magistrate" substitute "The Provincial Government shall appoint a pound-keeper for every pound".

Section 17.—For "dispose of them as hereinafter provided" substitute "be deemed to hold them as part of the revenues of the Province".

Omit section 18.

Section 31.—Omit all the words after "jurisdiction of the local authority".

The Prisoners Act, 1871.

(V of 1871.)

This Act shall cease to have effect.

The Pensions Act, 1871.

(XXIII of 1871.)

After section 3 insert—

"Definition. 3A. The expression 'the appropriate Government' means, in relation to federal pensions, the Central Government, and in relation to other pensions, the Provincial Government."

Sections 5 and 10.—For "Local Government" substitute "appropriate Government".

Section 11.—At the end insert—

"This section applies in British India also to pensions granted or continued, after the separation of Burma from India, by the Government of Burma".

Section 13.—For "Local Government" substitute "appropriate Government".

Section 14.—At the beginning insert "In each Province" and for "Local Government" substitute "appropriate Government".

The Indian Weights and Measures of Capacity Act, 1871.

(XXXI of 1871.)

Throughout the Act, save as expressly provided, for "Governor-General in Council" and "Local Government" substitute "appropriate Government".

Section 10.—For "Governor-General in Council and the Local Government respectively" and "Governor-General in Council or the Local Government respectively" substitute "appropriate Government".

After section 17 insert—

"18. In this Act 'the appropriate Government' means, in relation to standards of weight, the Central Government, and in relation to measures of capacity, the Provincial Government". Definition of appropriate Government.

The Indian Evidence Act, 1872.

(I of 1872.)

Section 26.—In the Explanation, omit "or in Burma".

Section 36.—For "Government" substitute "any Government in British India".

Section 37.—For "Act of the Governor-General of India in Council" substitute "Act of the Central Legislature" and for the words from "for the time being" to the end of the section substitute "by any laws for the time being in force or in a Government notification or notification by the Crown Representative appearing in the Official Gazette or in any printed paper purporting to be the London Gazette or the Government Gazette of any Dominion, colony or possession of His Majesty is a relevant fact".

Section 57.—Substitute for paragraph (1):—

"(1) all Indian laws".

In paragraph (4) for the words from "of the Councils" to "relating thereto" substitute "of the legislatures established under any laws for the time being in force in British India".

In paragraph (6) for "the Governor-General or any Local Government in Council" substitute "the Central Government or the Crown Representative".

In paragraph (7) for "the Gazette of India or in the Official Gazette of any Local Government" substitute "any Official Gazette."

Section 78.—In sub-section (1) for "the Executive Government of British India" substitute "the Central Government"; after the first "departments" insert "or of the Crown Representative", and at the end of the sub-section add "or, as the case may be, of the Crown Representative"; in sub-section (2) for "by order of Government" substitute "by order of the Government concerned"; and in sub-section (4) for "public act of the Governor-General of India in Council" substitute "Central Act".

Section 79.—For "Native State in alliance with Her Majesty" substitute "Indian State" and for "the Governor-General in Council" substitute "the Central Government or the Crown Representative".

Section 81.—For "the Gazette of India, or the Government Gazette of any Local Government or" substitute "any Official Gazette, or the Government Gazette".

Section 83.—For "Government" substitute "any Government in British India".

Section 113.—After "any portion of British territory has" insert "before the commencement of Part III of the Government of India Act, 1935".

The Special Marriage Act, 1872.

(III of 1872.)

Section 5.—For "Government" substitute "Provincial Government".

The Punjab Laws Act, 1872.

(IV of 1872.)

Throughout the Act, except as otherwise provided, for "the Local Government", "the Government" and "Government" substitute "the Provincial Government".

Section 39C.—Omit "subject to the control of the Governor-General in Council".

Section 48.—For "the Government" substitute "the Crown" and for "the Local Government" substitute "the Government for whose purposes the land is vested in His Majesty".

Section 50A.—For the words down to "unless" substitute "Rules made under this Act shall not be valid unless".

The Indian Contract Act, 1872.

(IX of 1872.)

Section 21.—Before the Illustration insert the following paragraph:—

"After the establishment of the Federation of India this section applies in relation to Central Acts made for a Federated State as it applies to laws in force in British India".

The Indian Christian Marriage Act, 1872.

(XV of 1872.)

Throughout the Act for "Native State" and "Native States" substitute "Indian State" and "Indian States".

Section 1.—For "the territories of Native Princes and States in alliance with Her Majesty" substitute "the Indian States".

Section 3.—Omit the definition of Native State.

Section 6.—Omit "or in the Gazette of India, as the case may be".

Section 8.—For "the territories of any Native Prince or State in alliance with Her Majesty" substitute "any Indian State".

Section 81.—For "the Governor-General in Council" substitute "the Government by whom he was appointed".

Section 84.—For "may" substitute "shall".

Section 86.—In sub-section (1) for "exercised" substitute "exercisable". In the same sub-section "the local Official Gazette" shall stand unmodified.

The Madras Civil Courts Act, 1873.

(III of 1873.)

Section 1.—Omit "for the time being" but in other respects the section shall stand unmodified.

Omit sections 6 and 7, the whole of Part IV and sections 22 and 23.

For section 24 substitute—

"24. The Ministerial Officers of a Court shall perform such duties as may from time to time be imposed upon them by the presiding officer of the Court." **Duties of Ministerial Officers.**

Omit sections 24A and 26.

The Northern India Canal and Drainage Act, 1873.

(VIII of 1873.)

Throughout the Act, except in sections 52 and 54, for "Government" and "the Government" substitute "the Provincial Government".

Section 1.—For "for the time being" substitute "which on the 11th February 1873 were"; but otherwise the section shall stand unmodified.

The Indian Oaths Act, 1873.

(X of 1873.)

Section 1.—For "subjects of Her Majesty" substitute "British subjects" and for "the territories of Native Princes and States in alliance with Her Majesty" substitute "all Indian States".

Section 3.—For "under the provisions of the Indian Councils Act, 1861, the Governor-General in Council has not power to repeal" substitute "no legislature or authority in British India has power to repeal".

The North-Western Provinces Village and Road Police Act, 1873.

(XVI of 1873.)

Section 1.—For the second paragraph substitute—

"This Act extends only to the territories which were on the 21st of November, 1873, under the Government of the Lieutenant-Governor of the North-Western Provinces".

Section 5.—For "at discretion by such Magistrate or by some officer authorised by him in that behalf" substitute "by the Provincial Government".

Section 6.—For "the Magistrate of the district" substitute "the Provincial Government".

Section 7.—For "Magistrate of the district" substitute "Provincial Government" and for "the road police of his district" substitute "road police".

The Married Women's Property Act, 1874.

(III of 1874.)

Section 2.—For "subjects of Her Majesty" substitute "British subjects" and for "the dominions of Princes and States in India in alliance with Her Majesty" substitute "all Indian States".

Section 6.—For "Presidency" substitute "Province".

The Foreign Recruiting Act, 1874.

(IV of 1874.)

Section 3.—Omit "signed by a Secretary to the Government of India".

The European Vagrancy Act, 1874.

(IX of 1874.)

Section 1.—In the second paragraph for "the dominions of Princes and States in India in alliance with Her Majesty" substitute "British subjects in any Indian State". For the third and fourth paragraphs substitute—

"And it shall come into force at once:

Provided that sections 4 to 16 (both inclusive), 19, 20, 24 and 29 shall not come into force in Coorg, or in the Andaman and Nicobar Islands, or as regards British subjects in any Indian State, until such day or respective days as the appropriate Government by notification in the Official Gazette appoints in this behalf".

Section 3.—After "In this Act" insert the following definition—

" 'the appropriate Government' means, in relation to British subjects in any Indian State, the Central Government, and in other cases, the Provincial Government."

Section 6.—For "any part of the dominions mentioned in section 1" substitute "any Indian State".

Sections 8, 10 and 11.—For "Local Government" substitute "appropriate Government".

Section 12.—Omit "and may be suspended or removed"; and for "Local Government" substitute "appropriate Government".

Sections 13 and 14.—For "Local Government" substitute "appropriate Government".

Section 16.—For "the Local Government" and "Government" substitute "the Central Government".

Section 17.—For "the Secretary of State for India in Council", "the Local Government of the territories in which such port is situate" and "the said Secretary of State in Council" substitute "the Central Government".

Omit section 18.

Section 22.—For "the Secretary of State for India" substitute "the Central Government".

For section 26 substitute—

"26. All fines recovered under this Act shall be paid to the credit of the Government of the Province in which the fine was imposed". Payment of fines.

For section 27 substitute—

"27. All prosecutions under this Act, other than prosecutions under section 22, may be instituted and conducted by such officer as the appropriate Government from time to time appoints in that behalf, and all prosecutions under section 22 may be instituted and conducted by such officer as the Central Government from time to time appoints in that behalf". Prosecutions.

Section 31.—Omit "chargeable to the State as"; for the words from "pay to the Government" to "by the State" substitute "pay to the Central Government the cost of his removal under this Act, and to that and any other Government in British India all other charges incurred by the Government in question"; and for "Secretary of State for India in Council" substitute "Government concerned".

Section 32.—Omit "chargeable to the State as". For the words from "to the Government" to "by the State" substitute "to the Central Government the cost of such person's removal under this Act, and to that and any other Government in British India all other charges incurred by the Government in question", and for "any payment to the Government" substitute "any payment to any Government".

Section 34.—For "a Local Government" and "the Local Government" substitute "the Central Government" and for "Sections 16 and 18" substitute "Section 16".

Section 35.—For "shall be exercised" substitute "may, subject to the provisions of section 124 of the Government of India Act, 1935, be exercised".

Section 36.—For "The Local Government" substitute "The Central Government and any Provincial Government, as respects matters with which they are respectively concerned".

The Second Schedule.—For "the Secretary of State for India in Council", "the Local Government", "the said Secretary of State" and "the said Secretary of State in Council" substitute "the Governor-General in Council (or, after the establishment of the Federation, the Governor-General of India)" and omit all words after "embark as aforesaid".

The Scheduled Districts Act, 1874.

(XIV of 1874.)

This Act shall cease to have effect, without prejudice to the continuing validity of any notification, appointment, regulation, direction or determination made thereunder and in force immediately before the commencement of Part III of the Government of India Act, 1935:

Provided that, where immediately before the first day of April, 1937, any enactment is, by virtue of any notification made under this Act, in force in any area in British India, either with or without restrictions or modifications, the Central Government, in relation to matters enumerated in List I of the Seventh Schedule to the Government of India Act, 1935, and the Provincial Government, in relation to other matters, may, within six months from the said date, by notification in the Official Gazette, declare that the enactment in question shall have effect in that area subject to such modifications and adaptations specified in the notification as the Government in question may deem necessary or expedient to bring it into accord with the Government of India Act, 1935.

The Laws Local Extent Act, 1874.

(XV of 1874.)

Omit from the Schedules the references to the Bengal State Prisoners Regulation, 1818, the Madras Regulation II of 1819, the Bombay Regulation XXV of 1827, the State Prisoners Act, 1850, and the State Prisoners Act, 1858.

Omit Part XI of the Sixth Schedule.

The Indian Majority Act, 1875.

(IX of 1875.)

Section 1.—For "subjects of Her Majesty" substitute "British subjects" and for "the dominions of Princes and States in India in alliance with Her Majesty" substitute "all Indian States".

The Indian Law Reports Act, 1875.

(XVIII of 1875.)

Omit the preamble.

In section 3 for the words from "decided by ' to "the said day" substitute "decided on or after the said day by any Court in British India which is a High Court for the purposes of the Government of India Act, 1935".

The Central Provinces Laws Act, 1875.

(XX of 1875.)

Sections 2 and 4.—For "Governor General in Council" substitute "Central Legislature".

Section 8.—Omit clause (*d*).

The Schedule.—In the entry in column 4 against Bengal Regulation XI of 1806, omit "of the Governor General in Council and", and for "Chief Commissioner" substitute "Central Government". In the entry in column 4 against Bengal Regulation VI of 1825 for "Chief Commissioner" substitute "Central Government".

The Chota Nagpur Encumbered States Act, 1876.

(VI of 1876.)

Throughout the Act for "Lieutenant-Governor of Bengal" substitute "Provincial Government".

Sections 2, 3, 4 and 7.—For "incurred to Government" substitute "incurred to the Crown".

Section 19.—Omit "subject to the control of the Governor-General in Council".

The Native Coinage Act, 1876.

(IX of 1876.)

Omit section 2 and throughout the remainder of the Act for "Native State" and "Native States" substitute "Indian State" and "Indian States".

The Bombay Revenue Jurisdiction Act, 1876.

(X of 1876.)

Section 1.—Omit "for the time being" but in other respects the section shall stand unmodified.

Section 3.—For "of Government" substitute "of the Crown" and for "by Government" substitute "by the Provincial Government".

Section 4.—For "claims against Government" substitute "claims against the Crown"; for "by Government" substitute "by the Provincial Government"; for "to Government" substitute "to the Crown" and for "Governor of Bombay in Council" substitute "Provincial Government".

Section 5.—For "against Government" substitute "against the Crown", and for "by Government" substitute "by the Provincial Government".

Section 11.—For "against Government" substitute "against the Crown".

Section 12.—Omit "the Governor-General in Council or" and "as the case may be".

Section 16.—For "against Government" substitute "against the Crown or the Federal Railway Authority"; for "and the Government undertakes" substitute "and the Crown or the Federal Railway Authority undertakes"; for "for the Government" substitute "for the Provincial Government"; and for "on Government" substitute "on the Provincial Government".

The Oudh Laws Act, 1876.

(XVIII of 1876.)

Sections 1 and 26.—Omit from "the territories of" to "Chief Commissioner of".

Section 27.—In clauses (*c*) and (*d*) after "persons" insert "(not being persons in the service of the Crown)".

Section 39.—In clause (*d*) omit "with the previous sanction of the Governor General in Council".

For clause (*e*) substitute—

"(*e*) the keeping and custody of civil, criminal and revenue records." Omit clause (*f*) and the proviso.

The Dramatic Performances Act, 1876.

(XIX of 1876.)

Section 3.—After "British India" insert "or British Burma" and omit "and Rangoon".

Omit section 11.

The Specific Relief Act, 1877.

(I of 1877.)

Section 9.—For "the Government" substitute "the Secretary of State; the Central Government, the Crown Representative or any Provincial Government".

Section 45.—For "Fort William, Madras, Bombay and Rangoon" substitute "Calcutta, Madras and Bombay"; and for

paragraph (*f*) substitute—

"(*f*) to make any order binding on the Secretary of State, the Central Government, the Crown Representative or any Provincial Government".

Section 56.—For "the Government of India or the Local Government" substitute "the Central Government, the Crown Representative or any Provincial Government".

The Opium Act, 1878.

(I of 1878.)

Section 1.—For "Governor-General in Council" substitute "Provincial Government".

Section 3.—At the end insert—

" 'sale' does not include sales for export across customs frontiers as defined by the Central Government, and 'sell' shall be construed accordingly."

Section 5.—Omit "subject to the control of the Governor-General in Council."

For section 7 substitute —

"7. The Provincial Government may, by notification published in the Official Gazette, declare any place to be a warehouse for all or any opium legally imported, whether before or after the payment of any duty leviable thereon, into the territories administered by that Government, or into any specified part thereof, and intended to be exported thence. Warehousing opium.

So long as the declaration remains in force, the owner of all such opium shall be bound to deposit it in that warehouse."

Section 8.—Omit "subject to the control of the Governor-General in Council".

Section 13.—Omit from "out of the proceeds" to the end.

Section 23.—For "Government" substitute "Provincial Government".

The Sea Customs Act, 1878.

(VIII of 1878.)

Section 3.—In paragraph (*a*) for the words from "to a Local Government" to "in that behalf" substitute "and entrust to a Provincial Government or to an officer of a Provincial Government under section 124(1) of the Government of India Act, 1935, such Government or officer, as the case may be".

In paragraph (*d*) omit "except Aden".

In paragraph (*e*) omit "Aden and".

Omit paragraph (*k*).

Omit section 7.

Section 8.—For "Local Government" substitute "Central Government".

Section 18.—For "and British India" substitute "British India and British Burma;" and after "or in British India" insert "or in British Burma".

Section 19.—For the words from "or any specified part" to the end of the section substitute "across any customs frontier as defined by the Central Government".

Section 19A.—In sub-section (3) for "or British India" substitute "British India or British Burma"; in sub-section (5) for "Secretary of State for India in Council" substitute "Central Government"; and for sub-section (6) substitute—

"(6) All regulations under this section shall be published in the Gazette of India and, with the consent of the Provincial Government concerned, in the Official Gazette of each Province."

Section 32.—For "Government" substitute "the Central Government".

Section 88.—The words "the local official gazette" shall stand unmodified and for "Local Government" substitute "Central Government".

Section 128.—Omit "Aden, Rangoon, Maulmain, Akyab".

Section 151.—After "at such rate" insert "(not exceeding the difference between the two rates)"

155.—For "the Local Government" substitute "the Central Government" and omit "with the previous sanction of the Governor-General in Council".

Section 177.—For "Indian Marine or Marine Survey" substitute "or His Majesty's Indian Navy".

Section 185.—Omit the words from "and in the case of Aden" to "this behalf".

Section 205.—After "re-published" insert "with the consent of the Provincial Government".

In Part I of the Schedule to the Act, in the heading, for "Acts of the Governor-General of India in Council" substitute "Central Acts".

In Part II of that Schedule in Form A for "Her Majesty's Secretary of State for India in Council" and "the said Secretary of State in Council" substitute "the Governor-General in Council (or, after the establishment of the Federation of India, the Governor-General of India)"; in Form B for "Government dues" substitute "Crown dues" and in Form C for "Her Majesty's Secretary of State for India in Council" and "the said Secretary of State in Council" substitute "the Governor of . . . ."

The Indian Arms Act, 1878.

(XI of 1878.)

Section 1.—For "the Government" substitute "any Government in British India".

Sections 6 and 7.—For "Local Government" substitute "Central Government".

Section 11.—For "the Local Government" and "such Government" substitute "the Central Government" and omit "with the previous sanction of the Governor-General in Council".

Section 13.—For " Local Government" substitute "Central Government".

Section 15.—For "the Local Government with the previous sanction of the Governor-General in Council" substitute "the Central Government".

Section 16.—For "Local Government" substitute "Central Government".

Section 17.—For "Local Government" substitute "Central Government".

Section 18.—For the words from "the Local Government" to the end of the section substitute "the Central Government may by a notification in the Official Gazette cancel or suspend all or any licences throughout the whole or any portion of British India".

Section 25, 26, 30 and 32.—For "Local Government" substitute "Central Government".

The United Provinces Assimilation of Powers Act, 1878.

(XIV of 1878.)

This Act shall cease to have effect.

The Northern India Ferries Act, 1878.

(XVII of 1878.)

Section 1.—The second paragraph shall stand unmodified.

Section 4.—In the first proviso omit from "and in any case" to "the Governor-General in Council".

Section 7.—For the words from "and may further direct" to the end of the section substitute "and thereupon that ferry shall be managed accordingly".

Section 7A.—Substitute the following section—

7A. The Provincial Government may direct that any public ferry wholly or partly within the area subject to the authority of a District Council or a District Board or a Local Board in the Province be managed by that Council or Board, and thereupon that ferry shall be managed accordingly."

"Management may be vested in District Council of District or Local Board.

Section 17.—Substitute the following section—

17. All tolls, rents, compensation and fines under this Act (other than tolls received by any lessee) shall form part of the revenues of the province."

"Tolls, rents, compensation and fines are to form part of revenues of Province.

Section 33.—For "the Local Government" substitute "the Central Government (where the transport is in connection with the affairs of the Central Government) and the Provincial Government in other cases".

The Elephants' Preservation Act, 1879.

(VI of 1879.)

Section 1.—Omit "British Burma".

The Hackney Carriage Act, 1879.

(XIV of 1879.)

Section 3.—For the first paragraph substitute—

"The Provincial Government concerned may, by notification in the Official Gazette, apply this Act to any municipalities in the United Provinces, the Punjab, the Central Provinces, Assam, Ajmer-Merwara or Coorg."

Omit section 4.

Section 5.—After the first "may" insert "with the sanction of the Commissioner" and omit "or cantonment" and from "Provided that" to the end of the section.

Section 8.—Omit "in any municipality" and "and in any cantonment where there is a cantonment fund to such fund".

The Transport of Salt Act, 1879.

(XVI of 1879.)

Section 3.—Omit "in the territories administered by the Governor of Fort St. George in Council or the Governor of Bombay in Council, as the case may be".

The Dekkhan Agriculturists' Relief Act, 1879.

(XVII of 1879.)

Section 62.—For "the Government" substitute "the Crown" and for "of Government" substitute "of the Crown".

The Vaccination Act, 1880.

(XIII of 1880.)

Section 1.—Omit "British Burma"; otherwise the section shall stand unmodified.

Section 18.—For "Government" substitute "Crown".

Section 23.—Omit "and fines".

The Municipal Taxation Act, 1881.

(XI of 1881.)

Section 3.—Omit "or

(*b*) payable by the Secretary of State for India in Council".

After section 3 insert:—

"3A. Notwithstanding anything in any enactment for the time being in force, the Provincial Government may by an order in writing prohibit the levy by a Municipal Committee of any specified tax payable by the Provincial Government and may by a like order rescind any such prohibition".

Power of Provincial Government to prohibit levy of taxes on it.

Section 4.—Omit "clause (a) of" and for "Secretary of State for India in Council" and "said Secretary of State in Council" substitute "Central Government".

Section 5.—For "section 3" substitute "section 3A"; and for "Secretary of State for India in Council" and "Secretary of State in Council" substitute "Provincial Government".

The Obstructions in Fairways Act, 1881.

(XVI of 1881.)

Section 1.—For "belonging to Her Majesty or hired by Her Majesty or by the Secretary of State for India in Council" substitute "belonging to or hired by a contract made on behalf of, the Crown".

Section 2.—For "the Local Government of the part of British India in which such Port is situate" substitute "the Central Government", and for "in the opinion of the Local Government" substitute "in the opinion of the Central Government".

Section 3.—For "the Government" substitute "the Central Government".

Sections 4 and 5.—For "Local Government" substitute "Central Government".

Section 10.—For "Secretary of State for India in Council" substitute "Central Government".

Section 12.—For "the Government" substitute "the Central Government".

After section 12 insert:—

"13. All references in this Act to the Central Government shall, in relation to fairways in inland waterways, be construed as references to the provincial Government concerned".

Application to fairways in inland waterways.

The Central Provinces Land-Revenue Act, 1881.

(XVIII of 1881.)

Section 1.—Omit "for the time being" but, save as aforesaid, the section shall stand unmodified.

Section 5.—Omit "the Chief Commissioner".

Section 6.—Omit sub-section (1).

Section 7.—Omit "Subject to the control of the Governor-General in Council" and "and may suspend or remove".

Section 8.—Omit "and may suspend or remove"; and for "duties, suspension and removal" substitute "and duties".

Section 10.—Omit "with the sanction of the Governor-General in Council" and the words from "and may suspend" to "like sanction".

Section 15.—Omit "subject to the control of the Governor-General in Council".

Sections 19 and 28.—Omit "with the previous sanction of the Governor-General in Council"

Section 29.—Omit the second paragraph

Section 47.—Omit "with the previous sanction of the Governor-General in Council".

Section 48.—For "Government" substitute "Crown"; and omit "subject to the control of the Governor-General in Council".

Section 53.—Omit "by the Governor-General in Council and also to revision" and "at any time before such confirmation is received".

Section 56.—In the proviso for the words from "as follows" to "3rdly" substitute "that".

Section 61.—For "Government" substitute "Provincial Government".

Section 67A.—For "Government" substitute "Crown"

Section 73.—For "Government" substitute "Crown"; and omit "with the previous sanction of the Governor-General in Council".

Section 74.—For "Government" substitute "Crown".

Section 83.—For "Government" substitute "Provincial Government".

Section 84.—Omit "by the Governor-General in Council"

Section 87.—For "Government" substitute "the Crown".

Section 123.—Omit "in his discretion".

Section 124.—For "Government" substitute "the Provincial Government".

Section 124A.—For "the Government" substitute "the Crown".

Section 130.—For "Government" substitute "the Crown".

Section 133.—For the words from "the powers conferred" to "any other" substitute "any".

Section 136 I.—For "Court of the Judicial Commissioner" substitute "High Court".

Section 137.—For "Governor-General in Council" substitute "Provincial Government".

Section 151.—For "by the Government" substitute "by the Crown", for "to Government" substitute "to the Crown" and elsewhere for "Government" substitute "Provincial Government".

Section 152.—Omit "the Governor-General in Council"; and for "Government of India" substitute "Crown".

Section 162.—Omit "with the previous sanction of the Governor-General in Council" and "shall be exercised subject to the control of the Governor-General in Council and ".

The Broach and Kaira Incumbered Estates Act, 1881

(XXI of 1881.)

Section 4.—For "Government" substitute "the Crown".

Section 5.—For "Governor of Bombay in Council" substitute "Provincial Government".

Section 11.—For "to Government" substitute "to the Crown".

Section 14.—For "Government" substitute "Crown".

Section 17.—For "to Government" substitute "to the Crown".

Section 38.—For "of Government" substitute "of the Crown".

The Negotiable Instruments Act, 1881.

(XXVI of 1881.)

Throughout the Act for "Local Government" substitute "Central Government".

The Indian Trusts Act, 1882.

(II of 1882.)

Section 20.—In paragraph (*b*) for "charged by the Imperial Parliament on the revenues of India" substitute "charged or secured by the Imperial Parliament on the revenues of India or of the Federation or of any Province"; in paragraph (*bb*) after "revenues of India" insert "or which may be issued by the Secretary of State on behalf of the Governor-General in Council under the provisions of Part XIII of the Government of India Act, 1935"; in paragraph (*c*) after "the Secretary of State for India in Council" (in the second place where those words occur) insert "or the Provincial Government of Bombay".

Section 29.—For "to Government" substitute "to the Crown" and for "the Government" substitute "the Provincial Government"

The Transfer of Property Act, 1882.

(IV of 1882.)

Section 1.—In the third paragraph, after "Governor of Bombay in Council" insert "and", and omit "and the Chief Commissioner of British Burma"; and for the fourth paragraph substitute—

> "But this Act or any Part thereof may by notification in the Official Gazette be extended to the whole or any part of the said territories by the Provincial Government concerned."

Section 6.—In paragraph (*g*) for "Government" substitute "the Crown".

Section 52.—For "the Governor-General in Council" substitute "the Central Government or the Crown Representative".

Section 58.—In paragraph (*f*) after "Bombay" insert "and", omit "Rangoon, Moulmein, Bassein and Akyab", and for "Governor-General in Council" substitute "Provincial Government concerned".

Section 69.—In paragraph (*a*) for "the Local Government with the previous sanction of the Governor-General in Council" substitute "the Provincial Government"; in paragraph (*b*) for "the Secretary of State for India in Council" substitute "the Crown"; in paragraph (*c*) omit "Rangoon, Moulmein, Bassein, Akyab" and for "Governor-General in Council" substitute "Provincial Government".

Section 107.—Omit "with the previous sanction of the Governor-General in Council".

The Indian Easements Act, 1882.

(V of 1882.)

Section 1 shall stand unmodified.

Section 2.—For "Government" substitute "Crown".

Section 15.—For "Government" substitute "the Crown".

The Indian Salt Act, 1882.

(XII of 1882.)

Section 1.—In the third paragraph omit "for the time being".

Section 3.—For "Local Government" substitute "Central Government".

Section 5.—Omit "who shall be appointed, and may be suspended or removed, by the Governor-General in Council".

Section 6.—In paragraph (*d*) for "on behalf of Government" substitute "on behalf of the Central Government".

Omit section 8.

Section 15.—For "Local Government" substitute "Central Government".

Section 30.—Omit "the Local Government or".

The Presidency Small Cause Courts Act, 1882.

(XV of 1882.)

For section 7 substitute—

"Appointment of Judges.

7. There shall be appointed from time to time a Chief Judge of the Small Cause Court and as many other Judges as the Provincial Government thinks fit."

Section 8A.—For "the qualifications required by section 7" substitute "the requisite qualifications".

For section 13 substitute—

"13. There shall be appointed an officer to be called the Registrar of the Court who shall be the chief ministerial officer of the Court; there shall also be appointed a Deputy Registrar and as many clerks, bailiffs and other ministerial officers as may be necessary for the administration of justice by the Court and for the exercise and performance of the powers and duties conferred and imposed on it by this Act or any other law for the time being in force. Appointment of Registrar and other officers.

The Registrar and other officers so appointed shall exercise such powers and discharge such duties, of a ministerial nature, as the Chief Judge may, from time to time, by rule direct."

Section 19.—For paragraph (*b*) substitute:—

"(*b*) Suits concerning any act done by or by order of the Central Government, the Crown Representative or the Provincial Government".

For section 51 substitute—

"51. Four or more persons shall be appointed bailiffs and appraisers for the purposes of this Chapter". Appointment of bailiffs and appraisers.

Section 52.—Omit from "shall give security" to "and they".

Section 66.—Omit the second paragraph.

Omit section 78.

Section 93.—Omit "and the Members of their respective Councils".

The Punjab University Act, 1882.

(XIX of 1882.)

Section 4.—For "The Lieutenant-Governor of the Punjab for the time being" substitute "Such person as the Governor General, exercising his individual judgment, may nominate".

Sections 19 and 21.—For "Local Government" substitute "Central Government".

The Madras Forest (Validation) Act, 1882.

(XXI of 1882.)

For "Governor General in Council" substitute "Central Legislature".

The Central Provinces Local Self-Government Act, 1883.

(I of 1883.)

Section 1.—Omit "for the time being", but save as aforesaid the section shall stand unmodified

Section 21.—For "the Government" substitute "any Government".

Section 22.—After "Her Majesty" insert "for the purposes of the Province".

Section 23.—In sub-section (1) omit clauses (*b*) to (*f*); and in clause (*g*) for "the Government" substitute "any Government".

Section 32.—After "Her Majesty" insert "for the purposes of the Province".

The Punjab District Boards Act, 1883.

(XX of 1883.)

Section 1.—In sub-section (2) omit "for the time being". Otherwise the said sub-section shall stand unmodified.

Section 3.—For "Government lands" substitute "Crown lands".

Section 11.—In sub-section (2) for "of Government" substitute "of the Crown".

Section 14.—For "of the Government" substitute "of the Crown".

Section 20.—In sub-section (2) after "vested in His Majesty" insert "for the purposes of the Province" and at the end of the section insert—

"(5) Nothing in this section shall be construed as authorising the Provincial Government to interfere with any property held or occupied for purposes which are purposes of the Central Government".

Section 28.—For "Government official" substitute "person in the service of the Crown"; for "the rules of the Civil Service Regulations for the time being in force" substitute "the rules for the time being governing his conditions of service" and after "the Government" insert "under which he is serving".

Section 29.—For "a Government official" substitute "a person in the service of the Crown"; for "the rules of the Civil Service Regulations for the time being in force" and "the Civil Service Regulations for the time being in force" substitute "the rules for the time being governing his conditions of service"; omit "from the Government or otherwise"; for "service under the Government" substitute "service under the Crown in India", and for "Government officials" substitute "persons in the service of the Crown".

For section 30 substitute—

"Power of taxation.

30. A District Board may, with the previous sanction of the Provincial Government, impose any tax which the Provincial Legislature has power to impose in the Province under the Government of India Act, 1935:

Provided that

(*a*) the Provincial Government may empower any District Board to impose without such sanction one or more of such taxes subject to such limitations as it may prescribe;

(*b*) no tax imposed under this section shall be imposed in respect of any property subject to the local rate; and

(*c*) a District Board which immediately before the commencement of Part III of the said Act was lawfully levying any tax under this section as then in force, may continue to levy that tax until provision to the contrary is made by the Central Legislature.

Explanation.—In this section "tax" includes any duty, cess or fee".

Section 31.—For all the sub-sections after sub-section (5) substitute—

"(6) When the proposals of a District Board in respect of a tax have been sanctioned by the Provincial Government, then—

(*a*) in the Punjab, the Provincial Government shall notify the imposition of the tax in accordance with the proposals, and shall in the notification specify a date not less than three months from the date of notification on which the tax shall come into force.

(*b*) elsewhere the Board may, at a meeting convened and constituted as aforesaid, direct the imposition of the tax in accordance with those proposals, so however that in giving such a direction the Board shall fix a date on which the tax shall come into force, not being less than three months from the date of the meeting, and the direction shall be notified in the Official Gazette for the Province.

(7) A notification of the imposition of a tax under this Act shall be conclusive evidence that the tax has been imposed in accordance with law."

Section 35.—For "Government" substitute "the Central or any Provincial Government".

Section 52.—For "Her Majesty" substitute "His Majesty for the purposes of the Province".

Section 54.—At the end of sub-section (2) insert—

"Provided that if one of the parties to a dispute referred to the Provincial Government is a cantonment authority, the decision of the Provincial Government shall not have effect until it is concurred in by the Central Government."

Section 59.—For "Secretary of State for India in Council" substitute "Provincial Government".

Section 68.—For "the Government" substitute "the Crown".

The Indian Explosives Act, 1884.

(IV of 1884.)

Section 5.—Omit "and each Local Government, with the previous sanction of the Governor General in Council, may for any part

of the territories under its administration"; and in sub-section (3) for "The authority making rules under this section may by the rules" substitute "Rules made under this section may"

Section 7.—Omit "or the Local Government with the previous sanction of the Governor-General in Council".

Section 9.—For "Local Government" substitute "Central Government".

Section 14.—In paragraph (*a*) for "the Government" substitute "any Government in British India" and in paragraph (*b*) for "under the Government" substitute "under any Government in British India".

Section 18.—In sub-section (5) omit "if it is made by the Governor-General in Council" and "and if it is made by the Local Government until it has been published in the Local Official Gazette".

The Agriculturists' Loans Act, 1884.

(XII of 1884.)

Section 2.—In sub-section (3) for "any other Local Government" substitute "any provincial Government".

Save as aforesaid, the section shall stand unmodified.

The Bengal Tenancy Act, 1885.

(VIII of 1885 as in force elsewhere than in Bihar.)

Section 1.—In proviso (*b*) to sub-section (3) (iv) for "the Bengal Legislative Council" substitute "both Chambers of the Provincial Legislature".

Section 3.—Clause (19) (*b*) shall stand unmodified.

Section 18c.—Omit from "to be credited" to end of the section.

Section 64.—For "the Secretary of State for India in Council" and "the Government" substitute "the Crown".

Section 101.—In sub-section (2) (*c*) for "by, the Government or" substitute "by, or on behalf of, the Crown, or is managed by".

Section 104H.—In sub-section (3) for "The Secretary of State for India in Council shall not be made a defendant in any such suits unless the Government" substitute "No such suit shall be brought against the Crown unless the Crown".

Section 116.—For "the Government" substitute "the Crown".

Section 143.—For "Governor-General in Council" substitute "Provincial Government".

Section 191.—For "Government" substitute "the Provincial Government".

Section 195A.—For "Secretary of State for India in Council" and "Government" substitute "Crown".

The Bihar Tenancy Act, 1885.

(VIII of 1885 as in force in Bihar.)

Section 64.—For "the Secretary of State for India in Council" and "Government" substitute "Crown".

Section 101.—In sub-section (2) (c) for "by, the Government or" substitute "by, or on behalf of, the Crown, or is managed by".

Section 104H.—In sub-section (3) for "The Secretary of State for India in Council shall not be made a defendant in any such suit unless the Government" substitute "No such suit shall be brought against the Crown unless the Crown".

Section 116.—For "the Government" substitute "the Crown".

Section 143.—For "the Governor-General in Council" substitute "the Provincial Government".

Section 191.—For "Government" substitute "Provincial Government".

Section 196 shall stand unmodified.

The Indian Sea Passengers Act, 1885.

(XII of 1885.)

Section 3.—Omit "Rangoon".

The Indian Telegraph Act, 1885.

(XIII of 1885.)

Section 1.—For "Native State in India" substitute "Indian State".

Section 3.—In sub-section (2) for "the Government" substitute "the Central Government" and in sub-section (7) for "the Government" substitute "the Central or any Provincial Government".

Section 5.—In sub-section (1) for "by the Governor-General in Council" substitute "by the Central or a Provincial Government" and for "the Government" substitute "the Government making the order"; and in sub-section (2) for "a certificate signed by a Secretary to the Government of India or to the Local Government" substitute "a certificate of the Central or, as the case may be, the Provincial Government".

Section 9.—For "Secretary of State for India in Council" substitute "Crown".

Section 10.—For "Government" substitute "Central Government".

Section 15.—For "Local Government" substitute "Central Government".

Section 19.—For "Government" substitute "Central Government".

Section 26.—For "by the Governor-General in Council" substitute "by the Central or a Provincial Government".

Section 27.—For "Government" substitute "Central Government".

Section 34.—Omit sub-section (2).

The Land Acquisition (Mines) Act, 1885.

(XVIII of 1885.)

Sections 2 and 3.—For "the Government" substitute "the Crown".

The Mirzapur Stone Mahal Act, 1886.

(V of 1886.)

Throughout the Act, for "Government" (except in the phrase "Local Government") substitute "Provincial Government".

Section 18.—For "The Local Government" substitute "The Tribunal to be constituted under section 296(2) of the Government of India Act, 1935".

The Births, Deaths and Marriages Registration Act, 1886.

(VI of 1886.)

Section 2.—For "within the dominions of Princes and States in India in alliance with Her Majesty, to British subjects in those dominions" substitute "to British subjects in Indian States".

Section 3.—Omit "by the Governor-General in Council".

Section 6.—Omit sub-section (2).

Section 11.—For "the dominions of Princes and States in India in alliance with Her Majesty" substitute "Indian States".

Section 13.—For "the dominions of any Prince or State in India in alliance with Her Majesty" substitute "any Indian State"; for "those dominions" substitute "those States", and omit the proviso.

Omit section 15.

Section 24.—In sub-section (2) for "the dominions of any Prince or State in India in alliance with Her Majesty" substitute "any Indian State" and omit the proviso.

Section 32.—For "the dominions of any Prince or State in India in alliance with Her Majesty" and "the dominions of any such Prince or State as aforesaid" and "any such dominions" substitute "any Indian State".

Section 33.—Omit "or he as the case may be".

Section 35A. In sub-section (1), for "if he or it thinks fit, may by notification in the Gazette of India or the local official Gazette as the case may be" substitute "may by notification in the official Gazette".

Section 36.—Substitute for sub-section (1):—

"(1) Provincial Government, for each Province, and the Central Government, for British subjects in Indian States, may make rules to carry out the purposes of this Act".

The Indian Tramways Act, 1886.

(XI of 1886.)

Section 2.—Substitute for sub-section (2) :—

"(2) This Act may by notification in the Official Gazette be extended to the whole or any part of the said territories by the Provincial Government concerned".

Section 3.—In paragraphs (1) and (3) for "the Government" substitute "the Central Government or any Provincial Government".

In paragraph (3) for "the Local Government" substitute "the Government for whose purposes a road is so vested or by which the road is maintained and repaired, as the case may be".

In paragraphs (12), (14) and (15) for "Local Government" substitute "Government".

Omit the word "and" at the end of paragraph (14) and after paragraph (15) insert "and

(16) 'Government', in relation to any tramway which is, or when completed will be, a federal railway, as defined in sub-section (2) of section 311 of the Government of India Act, 1935, means the Federal Railway Authority, and, in relation to any other tramway, means the Provincial Government".

Section 4.—In sub-section (1) for "Local Government" substitute "Government" and omit the proviso.

Sections 5 to 10.—For "Local Government" substitute "Government".

Section 12.—For all words after "public traffic" substitute "until it has been inspected and certified to be fit for such traffic by an engineer appointed—

(*a*) if the tramway is a railway, by the Federal Railway Authority, or, if the Central Government so direct, by that Government;

(*b*) if the tramway is not a railway, by the Provincial Government".

Sections 14 to 23.—For "Local Government" substitute Government".

Section 24.—For "Local Government" substitute "Government" and at the end of sub-section (2) insert "Provided that, if the tramway is a railway, the sanction required by this sub-section shall, in such cases as the Central Government may determine, be the sanction of that Government."

Sections 25 to 36.—For "Local Government" substitute "Government".

Section 45.—For "Local Government" substitute "appropriate Government" and at the end of the section insert :—

"(3) In this section 'the appropriate Government' means the Government, Central or Provincial, whose executive authority extends over the local authority in question."

Sections 46 to 48.—For "Local Government" substitute "Government".

Section 50.—For "a Local Government" substitute "any Government".

The Jhansi and Morar Act, 1886.

(XVII of 1886.)

Section 10.—For "Governor-General in Council" substitute "Provincial Government".

An Act to Legalise the Discharge by Lieutenant Governors of the North-Western Provinces of Certain Functions of the Governor-General in Council.

(XIX of 1886.)

This Act shall cease to have effect.

The Oudh Rent Act, 1886.

(XXII of 1886.)

Section 107B.—For clause (*a*) substitute—

"(*a*) is so held under a Crown grant."

Section 125.—For "Government" substitute "the Crown".

The Suits Valuation Act, 1887.

(VII of 1887.)

Section 2.—For "Governor-General in Council" substitute "Provincial Government".

Section 3.—Omit "subject to the control of the Governor-General in Council".

The Provincial Small Cause Courts Act, 1887.

(IX of 1887.)

For section 6 substitute:—

6. When a Court of Smaall Causes has been established there shall be appointed, by order in writing, a Judge of the Court:

"Judge.

Provided that if the Provincial Government so direct, the same person shall be the Judge of more than one such Court".

Section 8.—For sub-section (1) substitute—

"(1) If the Provincial Government so direct, there may be appointed, by order in writing, additional Judges of a Court of Small Causes or of two or more such Courts".

Omit section 9.

Section 12.—For sub-section (1) substitute:—

"(1) There may be appointed to a Court of Small Causes an officer to be called the Registrar of the Court".

Omit sub-section (5).

Omit section 13.

Section 31.—In sub-section (1) for "the Local Government from appointing" substitute "the appointment of".

The Second Schedule.—For paragraph (1) substitute:—

"(1) a suit concerning any act done or purporting to be done by or by order of the Central Government, the Crown Representative or the Provincial Government".

The Sindh-Pishin Railway Act, 1887.

(XI of 1887.)

Section 1.—Substitute for sub-section (2)—

"(2) It shall extend to all persons for whom the Central Legislature has power to make laws; and"

Section 5.—For "the Government shall not" substitute "neither the Crown nor the Federal Railway Authority shall"; for "the Governor-General in Council" substitute "the Federal Railway Authority" and for "the Government" substitute "the Authority".

The Bengal, Agra and Assam Civil Courts Act, 1887.

(XII of 1887.)

Section 1.—For "for the time being" substitute "which were on the 11th of March, 1887".

In other respects the section shall stand unmodified.

Section 6.—In sub-section (1) for "Local Government" substitute "Provincial Government or, as the case may be, the High Court" and omit "as the case may be".

Omit section 7.

Section 8.—In sub-section (1) for "upon the recommendation of" substitute "having consulted".

Omit section 12.

Section 15.—Omit "by the Governor-General in Council in the case of the High Court at Calcutta and" and "in other cases".

Omit sections 26 to 35.

Section 36.—Omit "or sections 27 to 35 (both inclusive)".

The Punjab Tenancy Act, 1887.

(XVI of 1887.)

Section 1.—In sub-section (2) omit "for the time being" but otherwise that sub-section shall stand unmodified.

Section 4.—In clauses (5), (10) and (15) for "the Government" substitute "the Crown".

Sections 32 and 53.—For "the Secretary of State for India in Council" and "the Government" substitute "the Crown".

The Punjab Land-Revenue Act, 1887.

(XVII of 1887.)

Section 1.—In sub-section (2) omit "for the time being" but otherwise the sub-section shall stand unmodified.

Section 3.—For "the Government" substitute "the Crown".

For section 5 substitute—

"Power to vary limits and alter number of tahsils, districts and divisions.

5. The Provincial Government may, by notification, vary the limits and alter the number of the tahsils, districts and divisions into which the Province is divided."

Section 6.—In sub-section (5) omit "for the time being" but otherwise the sub-section shall stand unmodified.

Sections 7 and 8.—Omit "and may be removed".

Section 9.—Omit all the words after "appointed".

Section 28.—For "Financial Commissioner" and "Government" substitute "Provincial Government".

Section 32.—For "the Government" substitute "the Crown".

Section 41.—For the first "the Government" substitute "the Crown for the purposes of the Province", for the second "the Government" substitute "the Provincial Government" and for "its right thereto" substitute "the Crown's right thereto".

Section 42.—For "Government" substitute "Crown".

Section 43.—For the first "Government" substitute "Crown" and for the second "Government" substitute "Provincial Government".

Section 59.—For "the Government" substitute "the Crown".

Section 60A.—For "Council" substitute "Assembly".

Section 96.—For "the Government" substitute "the Crown".

Section 101A.—Omit "in its discretion".

Section 139.—For "Government" substitute "Crown".

Section 140.—For "Secretary of State for India in Council" and "Government" substitute "Crown".

Section 147.—Omit "with the previous sanction of the Governor-General in Council" and "with the like sanction".

Section 158.—For "Governor-General in Council" substitute "Provincial Government".

The King of Oudh's Estate Act, 1887.

(XIX of 1887.)

In sections 1 and 3 for "Governor-General in Council" substitute "Provincial Government".

The Police Act, 1888.

(III of 1888.)

For section 2 substitute:—

2. (1) Notwithstanding anything in the Madras District Police Act, 1859, the Indian Police Act, 1861, the Bombay District Police Act, 1890, or any Act relating to the police in any Presidency-town, the Central Government may, by notification in the Official Gazette, create a special police district embracing parts of two or more Provinces, and extend to every part of the said district the powers and jurisdiction of members of a police force belonging to any part of British India specified in the notification.

"Constitution of Police Forces for special purposes

(2) Subject to any orders which the Central Government may make in this behalf, members of the said police force shall have, within every part of any Province of which any part is included in the said district, the powers, duties, privileges and liabilities which, as police officers, they have in their own Province

(3) Any member of the said police force whom the Central Government shall generally or specially empower to act under this sub-section may, subject to any orders which the Central Government may make in this behalf, exercise within any Province any part of which is included in the said district any of the powers of the officer in charge of a police-station in that Province, and when so exercising any such powers, shall, subject to any such Order as aforesaid, be deemed to be an officer in charge of a police-station discharging the functions of such an officer within the limits of his station.

(4) A part of a Province included in the said district shall not by reason of that inclusion cease, for the purposes of any enactment relating to police, to be part of that Province."

Section 3.—For "police establishment" substitute "police force"; for "Presidency, Province or place" substitute "Province"; for "that establishment" substitute "that police force".

After section 3 insert—

4. Nothing in this Act shall be deemed to enable the police of one Province to exercise powers and jurisdiction in any area within another Province, not being a railway area, without the consent of the Government of that other Province."

"Consent of Provincial Government to exercise of powers and jurisdiction.

The Indian Tolls Act, 1888.

(VIII of 1888.)

Section 2.—Omit sub-section (2).

Omit section 5.

The Measures of Length Act, 1889.

(II of 1889.)

Section 3.—For "Governor-General in Council" substitute "Provincial Government"; for "town of Calcutta" substitute "Province" and add at the end of the section the following proviso:—

"Provided that, until action is taken by the Provincial Government under this section, the copy of the Imperial standard yard approved by the Central Government before the commencement of Part III of the Government of India Act, 1935, and kept in the place within the limits of the town of Calcutta prescribed before that date by the Central Government, shall be the standard for determining the length of the standard yard in each Province."

Section 5.—For "under the authority of the Governor-General in Council or of a Local Government" substitute "before the first day of April, 1937, under the authority of any Government in British India or on or after that date under the authority of the Provincial Government"; and for "by order of the Governor-General in Council or the Local Government" substitute "by order of the Provincial Government."

The Indian Merchandise Marks Act, 1889.

(IV of 1889.)

Section 16.—For "in the Gazette of India and in local official Gazettes" substitute "in the official Gazette".

The Revenue Recovery Act, 1890.

(I of 1890.)

Section 4.—At the end insert the following sub-section:—

"(4) This section shall apply if under this Act as in force as part of the law of Burma, or under any other similar Act forming part of the law of Burma, proceedings are taken against a person in Burma for the recovery of an amount stated in a certificate made by a Collector in British India."

Section 6.—In sub-section (3) for "against the Government" substitute "against the Crown".

Section 8.—For "the Governor-General in Council" substitute "the Central Government or the Crown Representative".

After section 8 insert:—

"Recovery in India of land revenues, etc., accruing in Burma.

9. (1) The Central Government may direct that an arrear of land revenue accruing in Burma or a sum recoverable in Burma as an arrear of land revenue and payable to a Collector or other public officer or to a local authority in Burma may be recovered under this Act in British India and thereupon such arrear or sum shall be so recoverable:

Provided that the Central Government shall not give any such direction unless it is satisfied that the remedy available under section 4 of this Act in British India to a person paying under protest in British India an arrear accruing in British India is available under Burma law in Burma to a person paying under protest in British India an arrear accruing in Burma.

(2) For recovering by virtue of this section any arrears of tax or penalty due under the enactments relating to income-tax or super-tax in force in Burma, the Collector shall have such additional powers as he has in the case of Indian income-tax and super-tax under the proviso to section 46 (2) of the Indian Income-tax Act, 1922."

"Duty of Collectors to remit moneys collected in certain cases.

10. Where a Collector receives a certificate under this Act from a Collector of another Province or a Collector in Burma he shall remit any sum recovered by him by virtue of that certificate to that Collector, after deducting his expenses in connection with the matter."

The Charitable Endowments Act, 1890.

(VI of 1890.)

Section 3.—For sub-section (1) substitute:—

"(1) The Central Government may appoint an officer of the Government by the name of his office to be treasurer of charitable endowments for India, and the Government of any Province may appoint an officer of the Government by the name of his office to be treasurer of charitable endowments for the Province".

In sub-section (2) for "the territories subject to the Local Government" substitute the words "India or, as the case may be, the Province".

After section 3 insert:—

"Definition of 'appropriate Government', etc.

3A. In the subsequent provisions of this Act "the appropriate Government" means, as respects a charitable endowment, the objects of which do not extend beyond a single Province and are not objects to which the executive authority of the Central Government extends, the Government of the Province, and as respects any other charitable endowment the Central Government."

Section 4.—In sub-section (1) for "Local Government" substitute "appropriate Government" and omit sub-section (3).

Section 5.—For "Local Government" substitute "appropriate Government", and, at the end of sub-section (4) insert—

"Provided that nothing in this sub-section shall be construed as precluding a court from inquiring whether the Government by which a scheme was made was the appropriate Government".

Omit section 7.

Section 9.—For "Local Government" substitute "appropriate Government."

Section 10.—In sub-section (2) for "mentioned in section 4, sub-section (3), clause (*a*), (*b*), (*c*), (*d*) or (*e*)" substitute "specified in the direction."

In sub-section (3) for "the Local Government or the Governor-General in Council" substitute "the appropriate Government."

Section 11.—For "Local Government" substitute "appropriate Government."

For section 12 substitute:—

"Transfer of property from one treasurer to another.

12. If by reason of any alteration of areas or by reason of the appointment of a treasurer of charitable endowments for India or for any Province for which such a treasurer has not previously been appointed or for any other reason it appears to the Central Government that any property vested in a treasurer of charitable endowments should be vested in another such treasurer, that Government may direct that the property shall be so vested and thereupon it shall vest in that other treasurer and his successors as fully and effectually for the purposes of this Act as if it had been originally vested in him under this Act."

Section 13.—Omit sub-section (1) and in sub-section (2) for "Local Government" substitute "appropriate Government."

Section 14.—For "Government," where it first occurs, substitute "Crown."

The Guardians and Wards Act, 1890.

(VIII of 1890.)

Section 3.—For "the Governor-General in Council or by a Governor or Lieutenant-Governor in Council" substitute "any competent legislature, authority or person in British India"; and for "any High Court established under the Statute 24 and 25 Victoria, Chapter 104 (an Act for establishing High Court of Judicature in India)" substitute "any High Court established in British India by Letters Patent."

Section 14.—For sub-section (3) substitute:—

"(3) In any other case in which proceedings are stayed under sub-section (1), the Courts shall report the case to, and be guided by such orders as they may receive from, their respective Provincial Governments."

The Indian Railways Act, 1890.

(IX of 1890.)

Section 3.—After paragraph (18) insert—

"(19) 'federal railway', 'Indian State railway', and minor railway' have the meanings respectively assigned to them in the Government of India Act, 1935, except that they do not in

any provision of this Act include any tramway, unless that provision has been extended under section 146 of this Act to that tramway."

(20) "Government" where the context so requires means the Federal Railway Authority.

(21) "the safety controlling authority" means the Federal Railway Authority, or, in relation to functions which the Central Government determines under section 181 (3) of the Government of India Act, 1935, shall be performed by persons independent of that Authority and of any railway administration, the Central Government.

(22) "the general controlling authority" means, in relation to a federal railway, the Federal Railway Authority, in relation to a minor railway, the Provincial Government and, in relation to an Indian State railway, the Governor-General acting in his discretion."

Sections 4 and 5.—For "Governor-General in Council" substitute "safety controlling authority."

Section 7.—For "Governor General in Council" substitute "general controlling authority."

After section 8 insert—

Protection for Government property.

"8A. Nothing in the two last preceding sections shall authorise the doing of anything on or to any works, lands, or buildings vested in, or in the possession of, His Majesty for the purposes of the Central Government without the consent of that Government, or the doing of anything on or to any works, lands or buildings vested in, or in the possession of, His Majesty for the purposes of a Province without the consent of the Provincial Government."

Section 9.—For "Governor General in Council" substitute "safety controlling authority."

Section 10.—In sub-section (1) for "the three last foregoing sections" substitute "the foregoing provisions of this Chapter."

Section 11.—For "Governor General in Council" substitute "Provincial Government."

Section 12.—For "Governor General in Council" substitute "general controlling authority."

Sections 13 to 25.—For "Governor General in Council" substitute "safety controlling authority."

Omit sections 26 to 40.

Section 41.—Omit "or of any order made thereunder by the Commissioners or by a High Court."

Section 42.—Omit sub-section (2) and in sub-section (3) for "as aforesaid" substitute "as is referred to in section 42A."

In sub-section (4) substitute for proviso (*d*)—

"(*d*) If an objection to the rate, apportionment or route has been sent within the prescribed period, the Federal Railway Authority shall, on the request of any of the railway administrations, decide the matter."

In proviso (*e*) to that sub-section for "the Commissioners" substitute "the Federal Railway Authority."

In proviso (*f*) to that sub-section omit "and the case has been referred to the Commissioners" and for "of the Commissioners" and "until the Commissioners" substitute "of the Federal Railway Authority" and "until the Federal Railway Authority."

In the remainder of that sub-section for "Commissioners" and "Governor General in Council" substitute "Federal Railway Authority."

At the end of the section insert—

"(5) The powers conferred by this section on the Federal Railway Authority shall, in relation to any dispute between two or more minor railways be powers of the Provincial Government."

After section 42 insert—

"Prohibition of undue preference.

42A.—(1) A railway administration shall not make or give any undue or unreasonable preference or advantage to, or in favour of, any particular person or railway administration, or any particular description of traffic, in any respect whatsoever, or subject any particular person or railway administration or any particular description of traffic to any undue or unreasonable prejudice or disadvantage in any respect whatsoever.

(2) Any complaint that a railway administration is contravening the provisions of this section shall be determined by the general controlling authority."

Section 43.—For "Commissioners" substitute "general controlling authority."

Section 46.—For sub-section (1) substitute—

"(1) The appropriate authority shall decide any question or dispute which may arise with respect to the terminals charged by a railway administration."

In sub-section (2) for "Commissioners" substitute "appropriate authority."

At the end of the section insert—

"(3) In this section 'the appropriate authority' means, in relation to a Federal Railway or an Indian State Railway, the Federal Railway Authority, and in relation to a minor railway, the Provincial Government."

After section 46 insert—

"46A. Any decision given by the Federal Railway Authority, the general controlling authority, or the Provincial Government, in accordance with the provisions of this Chapter, shall be final and binding on all parties concerned.

Decisions in accordance with this chapter shall be binding.

46B. The provisions of this Chapter have effect subject to the provisions of Part VIII of the Government of India Act, 1935, relating to the Railway Rates Committee and the Railway Tribunal."

Saving for functions of railway rates committees and railway tribunal.

Section 47.—In sub-section (1) for "Governor General in Council" substitute "general controlling authority." In sub-section (3) for "the Governor General in Council" substitute "the general controlling authority and the safety controlling authority" and after "Provided that" insert—

"(*a*) where the safety controlling authority is not the same as the general controlling authority, the safety controlling authority shall not refuse its sanction unless it appears to it to be necessary so to do for the purpose of securing safety; and

(*b*)."

For sub-section (4) substitute—

"(4) The safety controlling authority or, with the sanction of that authority, the general controlling authority, may cancel any rule made under this section, and the company or officer required by sub-section (1) to make rules thereunder may at any time, with the previous sanction of those authorities, rescind or vary any such rule:

Provided that where the safety controlling authority is not the same as the general controlling authority, the safety controlling authority shall not cancel any rule or refuse its sanction to the cancellation, rescinding or variation of any rule, unless it appears to it to be necessary so to do for the purpose of securing safety."

Section 48.—For "Governor General in Council" substitute "safety controlling authority."

Section 49.—For "the Governor General in Council" substitute "any general controlling authority."

Section 50.—For "Governor General in Council" substitute "Federal Railway Authority."

Section 51.—For the first "Governor General in Council" substitute "general controlling authority" and for the second "Governor-General in Council" substitute "Provincial Government."

Section 51A.—For sub-section (2) substitute—

"(2) The scheme shall be submitted to the general controlling authority, which may sanction it, subject to such modifications and conditions as it may prescribe."

In sub-section (5) for the words from "Governor-General in Council" to "concerned" substitute "general controlling authority."

Section 52.—For "Governor General in Council" substitute "general controlling authority."

Section 53.—For "Governor General in Council" substitute "safety controlling authority."

Sections 54 and 55.—For "Governor General in Council" substitute "Federal Railway Authority."

Section 62.—For "Governor General in Council" substitute "safety controlling authority."

Section 63.—For "Governor General in Council" substitute "general controlling authority."

Section 72.—For "Governor General in Council" substitute "Federal Railway Authority."

Sections 83 to 85.—For "Governor General in Council" substitute "safety controlling authority."

Sections 87 and 88.—For "Government" substitute "safety controlling authority."

Section 89.—Omit "section 47, sub-section (6)" and for "Government" substitute "Federal Railway Authority."

Section 90.—After "general rules" insert "and the keeping thereof open to inspection"; for "Government" substitute "general controlling authority"; and at the end of the section insert—

"Provided that where the safety controlling authority is different from the general controlling authority, the safety controlling authority may take proceedings for the recovery of the said penalty if in the opinion of the safety controlling authority the default is a default which relates to safety."

Section 91.—For "Governor General in Council" and "Government" substitute "safety controlling authority."

Section 92.—For "Government" substitute "authority to which the return should have been submitted."

Section 93.—For "Government" substitute "appropriate authority"; and at the end of the section insert—

"In this section 'the appropriate authority' means, in relation to a contravention with respect to the maximum load to be carried in any wagon or truck, the safety controlling authority, and, in relation to any other contravention, the general controlling authority."

Section 94.—For "Governor General in Council" and "Government" substitute "safety controlling authority."

Section 95.—For "Government" substitute "general controlling authority."

Section 96.—For "Government" substitute "safety controlling authority".

Section 97.—In subsection (1) omit "to the Government" and for sub-sections (2) and (3) substitute—

"(2) Nothing in this Chapter shall be construed as requiring any authority to recover any penalty in any case in which it thinks it proper to refrain from so doing."

Section 98.—For "Government" substitute "appropriate authority".

Section 135.—For "Governor General in Council" substitute "general controlling authority".

Section 136.—For "Governor General in Council" substitute "safety controlling authority".

Omit section 139.

Section 143.—For "Governor General in Council" substitute "authority making, cancelling, rescinding or varying the rule"; and omit subsection (3).

Omit section 144.

For section 146 substitute—

"146. (1) This Act or any portion thereof may be extended by notification in the official gazette— **Power to extend Act to certain tramways.**

(*a*) to any tramway which is a Federal Railway within the meaning of the Government of India Act, 1935, by the Federal Railway Authority; and

(*b*) to any other tramway, by the Provincial Government.

(2) This section does not apply to any tramway not worked by steam or other mechanical power."

Section 147.—Substitute the following section—

"147. The general controlling authority may, with the sanction of the safety controlling authority, by notification in the official gazette, exempt any railway from any provisions of this Act: **Power to exempt railway from Act.**

Provided that the safety controlling authority shall not refuse its sanction unless it appears to it necessary so to do for the purpose of securing safety."

The Second Schedule:—In paragraph (*s*) for "Governor General in Council" substitute "Federal Railway Authority".

The North-Western Provinces and Oudh Act, 1890.

(XX of 1890.)

Section 11 shall stand unmodified.

Section 63.—For "the said Lieutenant-Governor and Chief Commissioner" substitute "the Provincial Government".

An Act to extend the Indian Easements Act, 1882, to certain areas in which that Act is not in force.

(VIII of 1891.)

This Act shall stand unmodified.

The Moorshedabad Act, 1891.

(XV of 1891.)

Section 3.—For "Governor-General in Council" substitute, where those words first occur, "Provincial Government of Bengal (hereafter in this Act called the Provincial Government)" and elsewhere "Provincial Government".

The Colonial Courts of Admiralty (India) Act, 1891.

(XVI of 1891.)

Section 2.—At the end of entry (3) insert "and" and omit from the beginning of entry (4) to the end of entry (5).

Section 3.—For "enactment of the Governor General in Council, or of a Governor in Council or Lieutenant-Governor in Council" substitute "Indian law".

Section 4.—Omit "Rangoon, Aden or".

The Bankers' Book Evidence Act, 1891.

(XVIII of 1891.)

Section 2.—For sub-section (1) substitute—

"(1) 'Company' means a company registered under any of the enactments relating to companies for the time being in force in any part of His Majesty's dominions or incorporated by an Act of Parliament or by an Indian law or by Royal Charter or by Letters Patent."

The Bengal Military Police Act, 1892.

(V of 1892.)

Section 1.—Sub-section (2) shall stand unmodified.

The Madras City Civil Court Act, 1892.

(VII of 1892.)

For section 4 substitute—

"Number of Judges.

4. The number of Judges to be appointed to the City Court shall be such as may from time to time be fixed by the Provincial Government by notification in the Official Gazette."

Section 6.—For clause (*b*) substitute—

"(*b*) one of the Judges shall be appointed the Principal Judge; and".

For section 7 substitute—

"7. (1) There shall be appointed to the City Court as many clerks, bailiffs and other Ministerial Officers as the Provincial Government may from time to time consider necessary. Ministerial Officers.

(2) The clerks, bailiffs and other Ministerial Officers so appointed shall exercise such powers and discharge such duties of a ministerial nature as the Judge or, when the Court consists of more than one Judge, the Principal Judge, may from time to time direct."

Section 2.—For "the Governor-General in Council" substi- substitute "Provincial Government of Madras".

The Lansdowne Bridge Act, 1892.

(VIII of 1892.)

Section 2.— For "the Governor-General in Council" substitute "the Provincial Government".

Section 4.—For "the Government of India" substitute "the Central Government or any Provincial Government" and for "the Governor-General in Council" substitute "the Provincial Government".

The Government Tenancy (North-West Frontier Province) Act, 1893.

(III of 1893.)

Section 1.—Omit "the territories for the time being administered by the Chief Commissioner of".

Sections 3, 7 and 9.—For "Government" substitute "Crown".

The Partition Act, 1893.

(IV of 1893.)

Section 7.—Omit "or of the court of the Recorder of Rangoon".

The Tributary Mahals of Orissa Act, 1893.

(XI of 1893.)

Section 4.—In sub-section (1) for "the Lieutenant-Governor of Bengal" substitute "the Provincial Government of Bengal, Bihar or Orissa"; for "under his Government" substitute "in the Province "; and for "the British Government" substitute "the Crown".

In sub-section (2) omit "within the territories subject to the Lieutenant-Governor of Bengal" and for "the said Lieutenant-Governor" substitute "the Provincial Government concerned".

The Land Acquisition Act, 1894.

(I of 1894.)

Section 3.—In paragraph (*e*) for "of the Governor General in Council" substitute "by an Indian law".

Sections 16 and 17.—For "vest absolutely in the Government" substitute "vest absolutely in the Crown".

Section 41.—For "with the Secretary of State for India in Council" substitute "with the Provincial Government" and for "payment to Government" substitute "payment to the Provincial Government".

42.—Omit "in the Gazette of India and also".

Section 43.—Omit from "under any agreement" to the end of the section and insert "under any agreement with such company, the Secretary of State for India in Council, the Secretary of State, or any Government in British India is or was bound to provide land".

Section 55.—Omit the proviso to sub-section (1).

The Amending Act, 1894.

(IV of 1894.)

Section 1 shall stand unmodified.

In the Schedule for "Act of the Governor General in Council" substitute "Central Act".

The Prisons Act, 1894.

(IX of 1894.)

Section 6.—For "the Governor of Bombay in Council" substitute "the Provincial Government of Bombay" and omit "with the previous sanction of the Governor General in Council".

Section 8.—For "60" substitute "59".

Section 12.—Omit "or section 60".
Sections 13 and 42.—For "60" substitute "59".

Sections 46 and 47.—For "Governor General in Council" substitute "Provincial Government".

Section 57.—For "60" substitute "59".

Section 59.—For the words down to "under its administration" substitute "The Provincial Government may"; omit paragraphs (8) and (9); after paragraph (7) insert the paragraphs (*a*) to (*s*) of section 60, re-numbering them as paragraphs (8) to (26) of section 59; in paragraph (10) (as so re-numbered) omit "guidance, control, punishment and dismissal"; at the end of paragraph (22) (as so re-numbered) insert "subject, however, to the consent of the Provincial Government of any other Province to which a

prisoner is to be transferred"; and in paragraph (26) (as so renumbered) omit the final "and" and insert the following paragraphs:—

"(27) in regard to the admission, custody, employment, dieting, treatment and release of prisoners; and

(28) generally for carrying into effect the purposes of this Act".

Save as aforesaid, omit section 60.

Section 61.—For "sections 59 and 60" substitute "section 59".

The Crown Grants Act, 1895.

(XV of 1895.)

Section 2.—For "by or on behalf of Her Majesty the Queen Empress, Her heirs or successors, or by or on behalf of the Secretary of State for India in Council" substitute "by or on behalf of the Crown".

The Amending Act, 1895.

(XVI of 1895.)

References to the Governor of Bombay in Council shall stand unmodified.

The Inland Bonded Warehouses Act, 1896.

(VIII of 1896.)

Section 4.—Omit the proviso to sub-section (1).

Form of bond.—For "Her Majesty's Secretary of State for India in Council" and for "the said Secretary of State in Council" substitute "the Governor-General in Council"; and at the end of the form add the following note—

"*Note.*—After the establishment of the Federation of India the words 'the Federation of India' should be substituted for the words 'the Governor-General in Council' ".

The Sindh Incumbered Estates Act, 1896.

(XX of 1896.)

Section 3.—For "to Government" substitute "to the Crown".

Section 4.—For "Governor of Bombay in Council" substitute "Provincial Government".

Section 11.—For "to Government" substitute "to the Crown".

Section 14.—For "of the Government" substitute "of the Crown".

Sections 17 and 22.—For "to Government" substitute "to the Crown".

Section 33.—For "Governor of Bombay in Council" substitute "Provincial Government".

The Epidemic Diseases Act, 1897.

(III of 1897.)

Section 2.—For "Governor-General in Council" substitute "Provincial Government"; in sub-section (1) for "India" substitute "the Province" and omit paragraph (*a*) of sub-section (2).

For section 2A substitute—

"Powers of Central Government.

2A. When the Central Government is satisfied that India or any part thereof is visited by, or threatened with, an outbreak of any dangerous epidemic disease and that the ordinary provisions of the law for the time being in force are insufficient to prevent the outbreak of such disease or the spread thereof, the Central Government may take measures and prescribe regulations for the inspection of any ship or vessel leaving or arriving at any port in British India and for such detention thereof, or of any person intending to sail therein, or arriving thereby, as may be necessary."

The Indian Fisheries Act, 1897.

(IV of 1897.)

Sections 1 and 2.—Omit "except Burma".

The Reformatory Schools Act, 1897.

(VIII of 1897.)

Section 1.—In sub-section (3), for "for the time being administered" substitute "administered on the 11th day of March, 1897"; and for "either of the said Local Governments" substitute "the Provincial Government of any of the said territories".

For section 15 substitute—

"Agreement between Provinces.

15. The Provincial Governments of any two Provinces may after mutual agreement, generally or specially, notify in their respective Official Gazettes that any Reformatory School situated in one of the Provinces shall be available for the reception of youthful offenders directed to be sent to a Reformatory School by any Court or magistrate in the other Province and may thereupon make provision for the removal of youthful offenders accordingly."

The General Clauses Act, 1897.

(X of 1897.)

Throughout the Act for "Acts of the Governor-General in Council" and "Act of the Governor-General in Council" substitute "Central Acts" and "Central Act".

Section 3.—At the end of clause (3*a*) insert "or by the Provincial Legislature or the Governor of Assam under the Government of India Act, 1935".

At the end of clause (5) insert "or by the Provincial Legislature or the Governor of Bengal under the Government of India Act, 1935".

After clause (5) insert—

"(5*a*) 'Berar' shall have the same meaning as in the Government of India Act, 1935."

Renumber clause (5*a*) as clause (5*b*); in it, after the third "Bihar and Orissa" insert "or Bihar", and after it insert—

"(5*c*) 'Bihar Act' shall mean an Act made by the Provincial Legislature or the Governor of Bihar under the Government of India Act, 1935".

At the end of clause (6) insert—"or by the Provincial Legislature or the Governor of Bombay under the Government of India Act, 1935".

For clause (7) substitute—

"(7) 'British India' shall mean, as respects the period before the commencement of Part III of the Government of India Act, 1935, all territories and places within His Majesty's dominions which were for the time being governed by His Majesty through the Governor-General of India or through any Governor or officer subordinate to the Governor-General of India, and as respects any period after that date means all territories for the time being comprised within the Governors' Provinces and the Chief Commissioners' Provinces, except that a reference to British India in an Indian law passed or made before the commencement of Part III of the Government of India Act, 1935, shall not include a reference to Berar."

After clause (8*a*) insert—

"(8*aa*) 'Central Act' shall mean an Act of the Central Legislature, and shall include, except in section 5, an Act made by the Governor-General under section 67B of the Government of India Act, or section 44 of the Government of India Act, 1935:

(8*ab*) 'Central Government' shall—

(*a*) in relation to anything done or to be done after the commencement of Part III of the Government of India Act, 1935, mean the Federal Government; and

(*b*) in relation to anything done before the commencement of Part III of the said Act, mean the Governor-General in Council, or the authority competent at the relevant date to exercise the functions corresponding to those subsequently exercised by the Governor-General in Council:

(8*ac*) 'Central Legislature' shall mean the Governor-General in Council acting in a legislative capacity under the Government of India Act, 1833, the Government of India Act, 1853, the Indian

Councils Acts, 1861 to 1909, or any of those Acts, or the Government of India Act, 1915, the Indian Legislature acting under the Government of India Act, or the Government of India Act, 1935, or the Federal Legislature acting under the Government of India Act, 1935, as the case may require."

After clause (8*b*) insert—

"(8*c*) 'Central Provinces and Berar Act' shall mean an Act made by the Provincial Legislature or the Governor of the Central Provinces and Berar under the Government of India Act, 1935."

After clause (9) insert—

"(9*a*) 'Chief Controlling Revenue Authority' or 'Chief Revenue Authority' shall mean—

(*a*) in provinces where there is a Board of Revenue, that Board;

(*b*) in provinces where there is a Revenue Commissioner, that Commissioner;

(*c*) in the Punjab, the Financial Commissioner; and

(*d*) elsewhere, such authority as, in relation to matters enumerated in List I in the Seventh Schedule to the Government of India Act, 1935, the Central Government, and in relation to other matters, the Provincial Government, may by notification in the Official Gazette appoint."

At the end of clause (11) insert "Provided that in any Central Act passed after the commencement of Part III of the Government of India Act, 1935, 'Colony' shall not include any Dominion as defined in the Statute of Westminster, 1931, any Province or State forming part of such a Dominion, or British Burma."

After clause (14) insert—

"(14*a*) 'Crown contracts' and equivalent expressions shall include contracts made by or on behalf of the Secretary of State in Council, contracts made in the exercise of the executive authority of the Central or any Provincial Government, contracts made by the Federal Railway Authority, and contracts made in connection with the exercise of the functions of the Crown in its relations with Indian States.

(14*b*) 'Crown debts' and equivalent expressions shall include debts due to the Secretary of State in Council, the Secretary of State, the Central Government, any Provincial Government, the Federal Railway Authority or the Crown Representative.

(14*c*) 'A grant' (including a transfer of land or of any interests therein or a payment of money) shall be deemed to be made by the Crown if it is made by or on behalf of His Majesty, the Secretary of State in Council, the Central Government, any Provincial Government, the Federal Railway Authority or the Crown Representative.

(14*d*) 'Crown liabilities' and equivalent expressions shall include the liabilities of the Secretary of State in Council, the Secretary of State, the Central Government, any Provincial Government, the Federal Railway Authority or the Crown Representative.

(14*e*) 'Crown property' and equivalent expressions shall include any property vested in His Majesty or otherwise held for the purposes of the Central or any Provincial Government, the Federal Railway Authority or the Crown Representative.

(14*f*) 'Crown representative' shall mean His Majesty's Representative for the exercise of the functions of the Crown in its relations with Indian States.

(14*g*) 'Crown revenues' and equivalent expressions shall include any revenues vesting in His Majesty."

After clause (18) insert—

"(18*a*) 'Federal Government' shall

(*a*) in relation to anything done or to be done after the commencement of Part III of the Government of India Act, 1935, but before the establishment of the Federation, mean, as respects matters with respect to which the Governor-General is by and under the provisions of the said Act for the time being in force required to act in his discretion, the Governor-General, and as respects other matters, the Governor-General in Council; and

(*b*) in relation to anything done or to be done after the establishment of the Federation mean the Governor-General acting or not acting in his discretion, and exercising or not exercising his individual judgment, according to the provision in that behalf made by and under the said Act;

and shall include—

(i) in relation to functions entrusted under section 124(1) of the said Act to the Government of a Province, the Provincial Government acting within the scope of the authority given to it under that sub-section; and

(ii) in relation to the administration of a Chief Commissioner's province, the Chief Commissioner acting within the scope of the authority given to him under section 94(3) of the said Act;

(18*b*) 'Federal Railway Authority' shall mean the Federal Railway Authority constituted by the Government of India Act, 1935, or, before the establishment of that Authority, the Central Government."

For clause (21) substitute—

"(21) 'Government' or 'the Government' shall include both the Central Government and any Provincial Government."

After clause (21) insert—

"(22) 'Government securities' shall mean securities of the Central or any Provincial Government and shall include sterling securities of the Secretary of State for India in Council or the Secretary of State."

Omit clause (22).

In clause (24) after "appeal" insert "not including the Federal Court".

For clause (27) substitute—

"(27) 'India' shall mean British India together with all territories of any Indian Ruler under the suzerainty of His Majesty, all territories under the suzerainty of such an Indian Ruler, the tribal areas, and any other territories which His Majesty in Council may, from time to time, after ascertaining the views of the Central Government and the Central Legislature, declare to be part of India;

(27*a*) 'Indian law' shall include any law, ordinance, order, byelaw, rule or regulation passed or made at any time by any competent Legislature, authority, or person in British India;

(27*b*) 'Indian State' shall include any territory, whether described as a State, an Estate, a Jagir or otherwise belonging to or under the suzerainty of a Ruler who is under the suzerainty of His Majesty, and not being part of British India."

Omit clause (29).

At the end of clause (30) insert "or by the Provincial Legislature or the Governor of Madras under the Government of India Act, 1935."

After clause (34) insert—

"(34*a*) 'North-West Frontier Province Act' shall mean an Act made by the Local Legislature or the Governor of the North-West Frontier Province under the Government of India Act, or by the Provincial Legislature or the Governor of the North-West Frontier Province under the Government of India Act, 1935."

After clause (37) insert—

"(37*a*) 'Official Gazette' or 'Gazette' shall mean the Gazette of India, or as the case may be, the official gazette of a province;

(37*b*) 'Orissa Act' shall mean an Act made by the Provincial Legislature, or the Governor of Orissa under the Government of India Act, 1935."

Clause (40).—In sub-clause (*a*) for "Government" substitute "Crown", and in sub-clause (*b*) omit "of the Government of India or of any Local Government", "by the Government of India or the Local Government", and "and extradition".

For clause (43) substitute—

"(43) 'Province' shall mean a Presidency, a Governor's Province, a Lieutenant-Governor's Province or a Chief Commissioner's Province;

(43*a*) 'Provincial Government', as respects anything done or to be done after the commencement of Part III of the Government of India Act, 1935, shall mean—

(*a*) in a Governor's Province, the Governor acting or not acting in his discretion, and exercising or not exercising his individual judgment, according to the provision in that behalf made by and under the said Act; and

(*b*) in a Chief Commissioner's Province, the Central Government, and, as respects anything done before the commencement of Part III of the said Act, shall mean the authority or person authorised at the relevant date to administer executive government in the Province in question."

At the end of clause (44*a*) insert—

"or by the Provincial Legislature or the Governor of the Punjab under the Government of India Act, 1935."

In clause (46) after "made" insert "by the Central Government" and at the end of the clause insert "or under section 95 or section 96 of the Government of India Act, 1935."

After clause (52)—insert—

"(52*a*) 'Sind Act' shall mean an Act made by the Provincial Legislature or the Governor of Sind under the Government of India Act, 1935."

After clause (54) insert—

"(54*a*) 'suits by or against the Crown' and equivalent expressions shall include suits by or against the Secretary of State, the Secretary of State in Council, the Central Government, a Provincial Government or the Crown Representative."

At the end of clause (55*a*) insert "or by the Provincial Legislature or the Governor of the United Provinces under the Government of India Act, 1935."

In section 4 omit "British India," "Government of India," "High Court" and "Local Government."

After section 4 insert—

Application of certain definitions to all Indian laws.

"4A. (1) the definitions in section 3 of the expressions "British India", "Central Act", "Central Government", "Central Legislature," "Chief Controlling Revenue Authority," "Chief Revenue Authority," "Crown contracts," "Crown debts," "Crown grants," "Crown liabilities," "Crown property," "Crown Representative," "Crown revenues," "Federal Government," "Federal Railway Authority," "Gazette," "Government," "Government Securities," "High Court," "India," "Indian law," "Indian State," "Official Gazette," "Provincial Government" and "suits by or against the Crown" apply also, unless there is anything repugnant in the subject or context, to all Indian laws.

(2) In any Indian law, references to the "Provincial Government" or "Central Government" in any provision conferring power to make appointments to the civil services of, or civil posts under, the crown in India include references to such person as the Provincial Government or the Central Government, as the case may be, may direct, and in any provision conferring power to make rules prescribing the conditions of service of persons serving His Majesty in a civil capacity in India include references to any person authorised by the Provincial Government or the Central Government, as the case may be, to make rules for the purpose.

(3) The references in any Indian law to servants of or under, or to service of or under, a Government or a Province, to property of, or belonging to, or vested in, the Secretary of State in Council or a Government or a Province, and to forfeitures to a Government or a Province, shall be construed as references respectively to persons in the service of the Crown, to the service of the Crown, to property vested in the Crown and to forfeitures to the Crown."

Section 5.—In sub-section (2) after "1915" insert "or under section 32 of the Government of India Act, 1935."

After section 5 insert—

"Coming into operation of Governor-General's Act.

5A.—Where any Act made by the Governor-General under section 44 of the Government of India Act, 1935, is not expressed to come into operation on a particular day, it shall come into operation on the date on which it is enacted by the Governor-General."

Section 30.—At the end insert "or section 42 or section 43 of the Government of India Act, 1935."

Omit sections 30A and 31.

The Lepers Act, 1898.

(III of 1898.)

Section 19.—For "Governor-General in Council" substitute "Provincial Government"; for "the territories of any Native Prince or State in India," substitute "any Indian State," and after "any leper asylum" insert "in the Province."

The Indian Post Office Act, 1898.

(VI of 1898.)

Section 2.—In paragraph (*b*) for "the Governor-General in Council" (in the first two places where those words occur) substitute "the Central Government or the Crown Representative."

Section 6.—For "The Secretary of State for India in Council" substitute "The Crown."

Section 26.—In sub-section (1) for "by the Governor-General in Council" substitute "by the Central or the Provincial Government"; and in sub-section (2) for "signed by a Secretary to the Government of India or to the Local Government" substitute "of the Central Government or, as the case may be, of the Provincial Government."

Section 27.—For "Native State" substitute "Indian State."

Section 31.—For "the Secretary of State for India in Council" substitute "the Central Government or the Secretary of State."

Section 33.—For "the Secretary of State for India in Council" substitute "the Central Government."

Section 34.—For "the Secretary of State for India in Council shall not" substitute "neither the Central Government nor the Secretary of State shall."

Section 35.—For "the Secretary of State for India in Council" substitute "the Central Government, the Secretary of State."

Sections 36 and 46.—For "Native State" substitute "Indian State."

Section 48.—For "the Secretary of State for India in Council" substitute "the Crown."

Section 57.—For "the Governor-General in Council" substitute "the Central Government or the Crown Representative."

The Livestock Importation Act, 1898.

(IX of 1898.)

Section 4.—Omit "subject to the control of the Governor-General in Council."

The Central Provinces Tenancy Act, 1898.

(XI of 1898.)

Section 1.—Omit "for the time being" but, save as aforesaid, the section shall stand unmodified.

Section 9.—For "Secretary of State for India in Council" substitute "Crown," and for "officer of the Government" substitute "servant of the Crown."

The Indian Stamp Act, 1899.

(II of 1899.)

Section 2.—Omit sub-section (8).

In clause (*b*) of sub-section (9) for "the Local Government" substitute "the collecting Government."

After sub-section (12) insert—

"(12A) 'collecting Government' means—

(*a*) in relation to stamp duty in respect of bills of exchange, cheques, promissory notes, bills of lading, letters of credit, policies of insurance, proxies and receipts, and in relation to any other stamp duty chargeable under this Act and falling within item 59 in List I in the Seventh Schedule to the Government of India Act, 1935, the Central Government;

(*b*) save as aforesaid, the Provincial Government."

Section 3.—For "Government" substitute "Crown."

Section 9.—For "the Governor-General in Council" substitute "the collecting Government" and for "British India" substitute "the territories under its administration."

Sections 10, 16 and 18.—For "Governor-General in Council" substitute "collecting Government."

Section 26.—For "the Secretary of State in Council" and "the said Secretary of State in Council" substitute "the Crown."

Section 33.—In sub-section (3) for "the Governor-General in Council" and "the Local Government" substitute "the collecting Government."

Section 35.—In proviso (*e*) for "the Government" substitute "the Crown."

Section 37.—For "the Governor-General in Council" substitute "the collecting Government."

Section 49.—For "the Local Government" substitute "the collecting Government."

Section 55.—For "Governor-General in Council" substitute "Provincial Government."

Section 57.—In sub-section (1) for paragraphs (*a*) to (*e*) substitute—

"(*a*) if the case arises in the Province of Madras or in Coorg, to the High Court at Madras;

(*b*) if it arises in the Province of Bombay, to the High Court at Bombay;

(*c*) if it arises in Sind, to the Judicial Commissioner's Court;

(*d*) if it arises in Agra or in Ajmer-Merwara, to the High Court at Allahabad;

(*e*) if it arises in Oudh, to the Chief Court;

(*f*) if it arises in Bihar or in Orissa, to the High Court at Patna;

(*g*) if it arises in the Punjab, the North-West Frontier Province, British Baluchistan, or Delhi, to the High Court at Lahore;

(*h*) if it arises in the Central Provinces and Berar, to the High Court at Nagpur, and

(*i*) if it arises in any other part of British India, to the High Court at Calcutta."

In sub-section (2) for "or Chief Court" substitute "Chief Court or Judicial Commissioner's Court."

Sections 58, 59 and 60.—For "or Chief Court" substitute "Chief Court or Judicial Commissioner's Court."

Section 70.—For "the Local Government" substitute "the collecting Government."

Section 74.—For "Local Government" substitute "collecting Government" and omit "subject to the control of the Governor-General in Council."

Section 75.—For "Governor-General in Council" substitute "collecting Government."

Section 76.—For sub-section (1) substitute:—

"(1) All rules made under this Act shall be published in the Official Gazette."

Section 76A.—For "The Local Government may by notification in the local Official Gazette" substitute "The Central Government, subject to the provisions of section 124(1) of the Government of India Act, 1935, and the Provincial Government, may by notification in the Official Gazette."

Schedule I, Item 35.—Omit exemption (*b*).

Item 53.—In exemptions (*a*) and (*f*) for "Government" substitute "Crown."

Item 57. In exemption (*c*) for "Governor of Bombay in Council" substitute "Provincial Government," and in exemption (*e*) for "Government" substitute "the Crown."

Item 58A.—Omit exemption (*b*).

The Government Buildings Act, 1899.

(IV of 1899.)

Section 3.—For "the Government" substitute, in the first two places where those words "occur, "the Crown" and in the third place where those words occur "the Government concerned."

Section 4.—In sub-section (1) for "the Government" substitute "the Government concerned."

Omit sub-section (3).

The Indian Arbitration Act, 1899.

(IX of 1899.)

Omit section 23.

The Currency Conversion (Army) Act, 1899.

(XIX of 1899.)

This Act shall cease to have effect.

The Central Provinces Court of Wards Act, 1899.

(XXIV of 1899.)

Section 1.—Omit "the territories for the time being administered by the Local Government of."

The Prisoners Act, 1900.

(III of 1900.)

Section 15.—In paragraph (*a*) of sub-section (1) for "of the Governor-General in Council, or of any Local Government" substitute "of the Central Government, or of the Crown Representative, or of any Provincial Government, or of the Government of Burma."

In paragraph (*b*) of that sub-section for "the territories of any Native Prince or State in India" substitute "any Indian State."

In sub-paragraph (*i*) of that paragraph for "British Government" substitute "Crown," for "by the Native Prince or State" substitute "by the State or the Ruler thereof" and for "the Governor-General in Council" substitute "the Central Government or the Crown Representative."

In sub-paragraph (ii) of that paragraph omit "in British India or", "the Governor-General in Council or" and "as the case may be".

In paragraph (*c*) of that subsection for "in the territories of any Native Prince or State in India" substitute "in any Indian State", and omit "of the Governor General in Council or".

After the said paragraph (*c*) insert—

"Provided that effect shall not be given to any sentence or order or warrant for detention passed or issued by any court or tribunal in Burma without the previous sanction of the Provincial Government concerned".

In sub-section (2) for "Native Prince" substitute "Ruler", for "British Government" substitute "Crown" and for "the Governor-General in Council" substitute "the Central Government or the Crown Representative".

Section 18.—In subsection (1) for "the Governor-General in Council" substitute "the Crown".

In subsection (2) for "shall be such as the Governor-General in Council or a Local Government authorised by the Governor General in Council in this behalf" substitute "shall in each Province be such as the Provincial Government".

In subsection (3) for "British Government" substitute "Crown"; for "by any Native Prince or State in India or by the Governor-General in Council" substitute "by any Indian State or the Ruler thereof or the Central Government or the Crown Representative".

Section 21.—For "Governor-General in Council" substitute "Provincial Government".

Section 29.—In subsection (1) for "Governor-General in Council" substitute "Provincial Government" and for "British India or to any prison in Berar" substitute "the Province, or with the consent of the Provincial Government concerned, to any prison in any other Province".

In subsection (2) for the words down to "its control" substitute "Subject to the orders, and under the control, of the Provincial Government" and omit from "or, in the case of a prisoner" to the end of the section.

Section 30.—In subsection (4) for "the territories of any Native Prince or State in India" substitute "any Indian State" and for "such Native Prince or State" substitute "such State or the Ruler thereof".

Section 33.—For "Any court established under the Indian High Courts Act, 1861," substitute "Any court which is a High Court for the purposes of the Government of India Act, 1935".

Section 40.—For "Governor-General in Council" substitute "Provincial Government".

Section 50.—For "Government" substitute "Provincial Government".

Section 51.—Omit "and in cases arising under section 40, the Governor-General in Council" and "or the Gazette of India, as the case may be".

The Punjab Alienation of Land Act, 1900.

(XIII of 1900.)

Section 16.—For "Government" substitute "any Government".

The Indian Tolls (Army) Act, 1901.

(II of 1901.)

Section 2.—In paragraph (*g*) for "the Government" substitute "the Central Government or the Federal Railway Authority or a Provincial Government".

Section 4.—For "the Government" substitute "the Central Government".

Section 6.—For "Local Government" substitute "Central Government" and in sub-section (2) omit "subject to the control of the Governor General in Council".

Section 7.—Omit "and the Local Government with the previous sanction of the Governor General in Council" and "or the Local Government with the previous sanction of the Governor General in Council"; and in sub-section (4) omit "or in the local Official Gazette".

The United Provinces (Designation) Act, 1902.

(VII of 1902.)

This Act shall cease to have effect.

The Indian Works of Defence Act, 1903.

(VII of 1903.)

Throughout the Act, except in section 44, for "Local Government" substitute "Central Government" and omit "with the previous sanction of the Governor General in Council".

Section 37.—For "Bombay and Rangoon" substitute "and Bombay".

Section 44.—Omit "and the Local Government with the previous sanction of the Governor General in Council".

The Indian Tea Cess Act, 1903.

(IX of 1903.)

Section 1.—Omit "except Aden."

Section 3.—Omit "or to Aden".

The Victoria Memorial Act, 1903.

(X of 1903.)

Section 2.—Clauses (*a*) and (*b*) of subsection (1) shall stand unmodified.

The Indian Foreign Marriage Act, 1903.

(XIV of 1903.)

Section 1.—In sub-section (3) for "the territories of any Indian Prince or State in India" substitute "any Indian State".

Section 2.—In sub-section (4) for "the Governor General in Council" substitute "the Provincial Government for each Province and the Central Government for British subjects and servants of the Crown in any Indian State".

The Indian Extradition Act, 1903.

(XV of 1903.)

Section 3.—Omit "or to any Local Government" and "or the Local Government, as the case may be".

Section 4.—For "Local Government" substitute "Central Government".

Section 5.—Omit "or any Local Government" and "or the Local Government".

Section 6.—Omit "or the Local Government as the case may be".

Section 8A.—For "Local Government" substitute "Central Government".

Section 9.—Omit "or to any Local Government".

Section 10.—For "Local Government" substitute "Central Government".

Section 11.—Omit "or the Local Government, as the case may be".

Section 15.—Omit "or the Local Government".

Section 19.—For "may be exercised by any Local Government" substitute "shall be powers of the Central Government," and in paragraph (*c*) for "Local Government" substitute "Central Government".

Section 20.—For "Local Government" substitute "Central Government."

The Ancient Monuments Preservation Act, 1904.

(VII of 1904.)

Section 2.—For "the Government" and "the Local Government" substitute "the Central Government".

Sections 3 and 4.—For "Local Government" substitute "Central Government".

Section 5.—For "the Local Government", "the Secretary of State for India in Council", "the Government" and "Government" substitute "the Central Government"; and omit sub-section (3).

Section 10.—For "Local Government", where those words first occur substitute "Central Government" and for "the Local Government may proceed to acquire it" substitute "the Central Government may direct the Provincial Government to acquire it."

Section 10A.—For "Local Government" substitute "Central Government".

Section 14.—For "the Local Government" and "Government" substitute "the Central Government".

Section 15.—For "the Local Government" and "the Government" substitute "the Central Government".

Section 16.—For "Government" substitute the "Central Government".

Section 17.—For "Local Government" substitute "Central Government".

Section 18.—For "the Local Government" and "the Government" substitute "the Central Government".

Section 19.—For "the Local Government" substitute "the Central Government".

Section 20.—Omit "after consulting the Local Government" and, in subsection (2), for "Government" substitute "the Crown".

Section 20A.—For "the Government" substitute "the Central Government".

Section 20B.—For "Government" substitute "the Central Government".

Section 23.—Omit "or the Local Government".

The Indian Universities Act, 1904.

(VIII of 1904.)

Section 2.—For subsection (2) (*b*) substitute—

"(*b*) the expression 'the Government' means the Central Government in the case of a University which is a corporation with objects not confined to a single Province, and the Provincial Government in other cases".

Section 8.—For "Chancellor with the previous sanction of the Governor General in Council" substitute "Government".

Section 27.—For "Governor General in Council" substitute "Government" and at the end of the section insert—

"Provided that if the effect of any such order would be either—

(*a*) to confine to one Province the powers of a University whose powers would, but for the order, not be so confined; or

(*b*) to extend beyond one Province the powers of a University whose powers previously were restricted to one Province,

the order may only be made jointly by the Central Government and the Governments of all the Provinces affected".

The First Schedule.—After "the Member of Council of" insert "or Minister of"; for "Member of the Executive Council of the Government of Bengal or Minister appointed by the Governor to be" substitute "Minister of the Governor of Bengal"; for "Chief Court of the Punjab" substitute "High Court at Lahore" and for "Local Government" substitute "Government"; but save as aforesaid the Schedule shall stand unmodified.

The Indian Railway Board Act, 1905.

(IV of 1905.)

After section 3 insert—

"Cessation of Railway Board on establishment of Federal Railway Authority.

4. On the establishment of the Federal Railway Authority, the Railway Board shall cease to exist and any notification issued under section 2 of this Act shall cease to have effect, without prejudice, however, to the validity of anything previously done in pursuance thereof".

The Indian Coinage Act, 1906.

(III of 1906.)

Sections 16 and 20.—Omit "or by the Local Government".

The Explosive Substances Act, 1908.

(VI of 1908.)

Section 7.—Omit "the Local Government or".

The Indian Limitation Act, 1908.

(IX of 1908.)

Section 13.—For "the Government" substitute "the Central Government or the Crown Representative".

Section 26.—For "Government" substitute "the Crown".

The First Schedule.—In article (149) after "India in Council" insert "the Secretary of State, the Crown Representative, the Central Government or any Provincial Government"; in article (151) for "Lahore and Rangoon" substitute "and Lahore"; and in article (162) omit "Rangoon".

The Indian Criminal Law Amendment Act, 1908.

(XIV of 1908.)

Section 16.—Omit subsection (2).

The Indian Ports Act, 1908.

(XV of 1908.)

Section 1.—For "Local Government" substitute "Government".

Section 2.—In paragraph (1) omit "or the Government of India".

Section 3.—In paragraph (3) for "Local Government" substitute "Government" and after paragraph (7) add—

"(8) 'Major port' means any port which the Central Government may by notification in the Official Gazette declare, or may under any law for the time being in force have declared, to be a major port.

(9) 'Government', as respects major ports, for all purposes, and, as respects other ports, for the purposes of making rules under clause (*p*) of section 6 (1) and of the appointment and control of port health-officers under section 17, means the Central Government, and save as aforesaid, means the Provincial Government."

Chapter II.—In the heading for "Local Government" substitute "Government".

Sections 4 and 5.—For "Local Government" substitute "Government".

Section 6.—In sub-section (1) for "Local Government" substitute "Government"; in paragraphs (*j*) and (*jj*) for "Government" substitute "Crown"; and in paragraph (*p*) omit "subject to the control of the Governor-General in Council".

In sub-section (1A) omit "In addition to any rules which it is empowered to make under sub-section (1)".

Section 7.—For "Local Government" substitute "Government" and in sub-section (4) for "that Government" substitute "the Government".

Section 11.—For "Local Government" substitute "Government".

Section 12.—For "Local Government" substitute "Government" and for "that Government" substitute "the Government".

Sections 13 and 17.—For "Local Government" substitute "Government".

Section 18.—For "the Secretary of State for India in Council" substitute "the Crown".

Sections 19, 21, 22, 23 and 27.—For "Local Government" substitute "Government".

Section 31.—In the proviso to sub-section (1) for "Governor General in Council" substitute "Government".

Section 33.—For "Local Government" substitute "Government".

In sub-section (2) for "within its own province" substitute "in British India or, as the case may be, in the Province" and omit the proviso.

Omit the proviso to sub-section (3).

Section 34.—For "Local Government" substitute "Government".

Section 35.—For "Local Government" substitute "Government" and omit the proviso.

Section 36.—For "Local Government" substitute "Government".

In sub-section (2) for "that Government" substitute "the Government".

Section 37.—In sub-section (1) after "any number of ports" insert "in the Province not being major ports" and omit the proviso.

In paragraph (*a*) of sub-section (2) omit "subject to the control of the Governor General in Council" and "and shall cause effect to be given to any directions which the Governor-General in Council may deem it necessary to issue with respect to such expenditure."

Section 43.—For "Government" substitute "the Crown".

Section 46.—Omit "other than a port in Burma" and for "Local Government" substitute "Government".

Section 47.—For "Local Government" substitute "Government".

Sections 49 and 50.—For "Local Government" substitute "Central Government".

Section 54.—For "Local Government" substitute "Government".

Section 62.—For "Indian Marine Service" substitute "the Royal Indian Navy".

Section 64.—For "Local Government" substitute "Government".

Section 65.—For "with the previous sanction of the Local Government" substitute "with the previous sanction, in the case of a cantonment authority or the port authority of a major port, of the Central Government, and in other cases of the Provincial Government".

Section 68.—For "Local Government" substitute "Government".

The First Schedule.—In Part III, for "Local Government" in column 3 substitute "Government", and omit the entries relating to Aden.

Omit Part IV.

The Indian Registration Act, 1908.

(XVI of 1908.)

Section 3.—In sub-section (2) for "under Government" substitute "under the Crown".

Omit section 4.

Section 6.—Omit the proviso.

Section 13.—In sub-section (1) omit "All appointments made by the Inspector-General under section 6 and" and omit sub-section (3).

Section 14.—Omit sub-section (1).

Section 17.—In paragraph (*vii*) of sub-section (2) for "Government" substitute "the Crown".

Section 83.—In sub-section (1) omit "the Branch Inspector General of Sindh".

Omit section 92.

The Presidency-towns Insolvency Act, 1909.

(III of 1909.)

Long title.—Omit "and the town of Rangoon".

Preamble.—For "towns of Rangoon and" substitute "town of".

Section 3.—For "Bombay and Rangoon" substitute "and Bombay".

Sections 20 and 23.—Omit "in the Gazette of India and".

Section 60.—For "His Majesty's Royal Indian Marine Service" substitute "the Royal Indian Navy".

Section 77.—In sub-section (1) for "Bombay and Rangoon" substitute "and Bombay"; in sub-section (3) omit "and in the Chief Court of Lower Burma under that Act, as applied by the Lower Burma Courts Act, 1900" and "and in the Chief Court of Lower Burma"; and at the end of the section insert—

"(4) On and after the first day of April nineteen hundred and thirty-seven the powers conferred by this section on the Chief Justice of the High Court at Bombay and on the Judicial Commissioner of Sind shall be powers of the Provincial Government of Bombay and of the Provincial Government of Sind respectively".

Section 113.—Substitute the following section:—

"113. Rules made under the provisions of this Part shall be subject to the previous sanction of the Provincial Government." Sanction to rules.

Section 114.—Omit "in the Gazette of India or" and "as the case may be".

Sections 122 and 123.—For "the Government of India" and "the Governor General in Council" substitute "the Provincial Government".

The Whipping Act, 1909.

(IV of 1909.)

Section 5.—For "Governor General in Council" substitute "Provincial Government".

The Dourine Act, 1910.

(V of 1910.)

Section 11.—For "employ of Government" substitute "service of the Crown".

The Indian Electricity Act, 1910.

(IX of 1910.)

Section 12.—In sub-section (2) omit "or Rangoon" and in sub-section (5) for "the Government" substitute "the Central Government or the Provincial Government".

Sections 18, 20 and 30.—Omit "or Rangoon".

Section 32.—For "the Local Government" substitute "the Central Government".

Section 35.—Omit "or the local official Gazette as the case may be".

Section 36.—In sub-section (1) after "and every Electric Inspector so appointed shall" insert "in relation to mines, oilfields and railways"; and in sub-section (2) after "and every Inspector so appointed shall" insert "except in relation to mines, oilfields and railways".

Section 37.—For "Governor General in Council" substitute "Provincial Government" and in sub-section (1) omit "for the whole or any part of British India".

Section 38.—In sub-section (3) for "British India" substitute "the Province" and for "Governor General in Council" substitute "Provincial Government".

After section 38 insert—

"Rules as to mines, etc.

38A. The provisions of sections 37 and 38 shall, in relation to rules affecting mines, oilfields and railways, have effect as if the references to the Provincial Government and the Province were references to the Central Government and British India respectively."

Section 49.—For "the Government" substitute "any Government in British India".

Section 53.—In sub-section (1) for "the Government" substitute "the Central Government or the Provincial Government" and after paragraph (*a*) insert:—

"(*aa*) where the Federal Railway Authority is the addressee, at the office of the Authority".

The Indian Museum Act, 1910.

(X of 1910.)

Section 2.—In sub-section (1) for paragraphs (*b*) and (*c*) substitute:—

"(*b*) four other persons to be nominated by the Central Government".

Section 9.—For (*a*) substitute:—

"(*a*) no officer shall be appointed without the approval of the Central Government; and"

Section 13.—Omit "under the Civil Service Regulations for the time being in force" and for "Government" substitute "the Central Government".

For section 15 substitute—

"15. Subject to such conditions as the Central Government may approve, the Trustees may deliver possession of the whole or any part of the property described in the schedule to such person as that Government may appoint".

Power to Trustees to part with certain property in their possession.

The Indian Patents and Designs Act, 1911.

(II of 1911.)

Section 2.—For paragraph (1) substitute:—

'(1) "Advocate-General" means an Advocate-General appointed under the Government of India Act, 1935.'

Section 21A.—In sub-sections (1) and (2) for "Secretary of State for India in Council" substitute "Central Government".

Section 72.—For "the Governor of Fort St. George in Council, the Governor of Bombay in Council, the Lieutenant Governor of Burma" substitute "the Provincial Government of Madras and Bombay".

The Indian Army Act, 1911.

(VIII of 1911.)

After section 6 insert—

"6A. When an officer, warrant officer or non-commissioned officer of His Majesty's Burma Forces is a member of a body of those forces acting with, or is attached to, any body of His Majesty's Indian Forces under such conditions as may be prescribed, then for the purposes of command and discipline and for the purposes of the provisions of this Act relating to superior officers he shall in relation to that body of His Majesty's Indian Forces be treated and have all such powers as if he were an officer, warrant officer or non-commissioned officer as the case may be of His Majesty's Indian Forces.

Relations between Indian Forces and Burman Forces when acting together, etc.

(2) When an officer, warrant officer, non-commissioned officer or soldier of His Majesty's Indian Forces is a member of a body of those forces acting with, or is attached to, any body of His Majesty's Burma Forces under such conditions as may be prescribed, then for the purposes of command and discipline and for the purposes of the provisions of this Act, relating to superior officers the officers, warrant officers and non-commissioned officers of that body of His Majesty's Burma Forces shall in relation to him be treated and have all such powers as if they were officers, warrant officers or non-commissioned officers of His Majesty's Indian Forces.

(3) In this section "prescribed" means "prescribed by the Central Government and the Governor of Burma", and, for the purposes of this section, the relative rank of officers, warrant officers and non-commissioned officers of His Majesty's Indian Forces and His Majesty's Burma Forces may be determined by regulations made by the Central Government and the Governor of Burma.

Section 7.—In clause (17) for "Governor-General in Council" substitute "Central Government or the Crown Representative".

Sections 31, 35 and 36.—For "Government" substitute "the Crown".

Section 41.—For "in which the Governor-General in Council exercises jurisdiction by virtue of the Indian (Foreign Jurisdiction) Order in Council, 1902," substitute "in which the Central Government or the Crown Representative exercises jurisdiction by virtue of the Government of India Act, 1935, or of any Order in Council made under the Foreign Jurisdiction Act, 1890".

Section 85.—For sub-section (3) substitute—

"(3) When the witness resides in any Indian State or tribal area in which there is an officer representing the Central Government or the Crown Representative, the commission may be isued to that officer."

Section 90.—For "civil or military service of the Government" substitute "service of the Crown".

Section 92.—For "civil or military service of Government" substitute "service of the Crown".

Section 115.—For "the Secretary of State for India in Council" substitute "the Crown".

Section 126.—For "the Government" substitute "the Crown".

Prevention of Seditious Meetings Act, 1911.

(X of 1911.)

Section 1.—For "Governor General in Council" substitute "Provincial Government".

Section 2.—Omit "with the previous sanction of the Governor General in Council".

The Co-operative Societies Act, 1912.

(II of 1912.)

Section 19.—For "Government" substitute "Crown".

Section 28.—In sub-section (2) for "Local Government" substitute "Government" and at the end add the following paragraph:—

"In this sub-section 'Government' in relation to stamp duty in respect of bills of exchange, cheques, promissory notes, bills of lading, letters of credit, policies of insurance, proxies and receipts,

and in relation to any stamp duty falling within Item 59 in List I in the Seventh Schedule to the Government of India Act, 1935, means the Central Government, and save as aforesaid means the Provincial Government."

The Indian Lunacy Act, 1912.

(IV of 1912.)

Section 2.—For "established under the Indian High Courts Acts 1861 to 1911" substitute "constituted by His Majesty by Letters Patent".

Section 3.—In paragraph (1) for "by Government" substitute "by any Government in British India"; in paragraph (2) for "Governor-General in Council" substitute "Provincial Government" and in paragraph (7) for "medical officer of Government" substitute "medical officer in the service of the Crown".

Section 17.—Omit "or Rangoon".

Sections 22 and 35.—For "any asylum established by Government" substitute "any Government asylum".

For section 89A substitute—

Fixation of cost of maintenance.

"89A. (1) In computing the amount payable on account of the cost of maintenance of lunatics detained in any asylum for the cost of whose maintenance any Provincial Government is liable, charges may be included on account of the upkeep of the asylum and of the capital cost of establishment thereof.

(2) In the case of any such lunatic under detention immediately before the commencement of Part III of the Government of India Act, 1935, the amount payable by any Provincial Government on account of the cost of his maintenance shall be determined in accordance with any general or special orders of the Governor General in Council in force immediately before that date and applicable to his case."

Section 89B.—Omit sub-section (2).

Section 91.—In paragraph (*a*) of sub-section (1) for "established under the Indian High Courts Acts, 1861 to 1911" substitute "constituted by His Majesty by Letters Patent" and in paragraph (*y*) for "asylums established by Government" substitute "Government asylums".

Section 95.—For "by Government" substitute "by the Secretary of State or any Government in British India" and in sub-section (2) for "The Secretary of State for India in Council" substitute "The Secretary of State or, as the case may be, the Government concerned".

Section 98.—For "the Governor General in Council" substitute "the Central Government or the Crown Representative or by the law of Burma".

After section 100 insert the following section:—

Ranchi European Mental Hospital.

"100A. The powers conferred by this Act upon the Provincial Government shall, in relation to the Ranchi European Mental Hospital, be powers of the Central Government."

The Provident Insurance Societies Act, 1912.

(V of 1912.)

Throughout the Act for "Local Government" substitute "Central Government".

The Indian Life Assurance Companies Act, 1912.

(VI of 1912.)

Section 2.—For "Local Government" substitute "Central Government".

Omit section 40.

The Third Schedule.—For "British and Colonial" substitute "British Burman and Colonial"; for "whereon interest is guaranteed by the Indian Government" substitute "whereon interest is guaranteed by any Government in British India or by the Secretary of State as successor to the Secretary of State for India in Council"; and for "the British or any Colonial Government" substitute "the British, the Burman or any Colonial Government".

The Bengal, Bihar and Orissa and Assam Laws Act, 1912.

(VII of 1912.)

After section 8 insert—

"Application to adaptations and modifications made under s. 293 of the Government of India Act, 1935.

9. References in this Act, by whatever form of words, to Indian laws in force immediately before the commencement of this Act shall, after the commencement of Part III of the Government of India Act, 1935, be construed as references to those laws as adapted and modified under section 293 of that Act."

Schedule D.—In the first column, for "Local Government" substitute "Local or Provincial Government"; and omit items 4, 5, 11, 12, 22 and 23, but, save as aforesaid, the said first column shall stand unmodified. In the second column for "at Fort William in Bengal" substitute "in Calcutta", and elsewhere omit "Fort William in".

The Delhi Laws Act, 1912.

(XIII of 1912.)

Section 3.—Omit the proviso.

Section 7.—For "Governor General in Council" substitute "Provincial Government".

Schedule B.—Omit items 1, 3, 4 and 13.

The Official Trustees Act, 1913.

(II of 1913.)

Section 1.—For "British and Indian subjects of His Majesty in the territories of Native States in India" substitute "British subjects in Indian States".

Section 2.—For paragraph (1) substitute—

"(1) 'Government' or 'the Government' means in relation to any Province, the Provincial Government, and, in relation to British subjects in Indian States, the Central Government."

For paragraph (2) substitute—

"(2) 'High Court' means—

(*a*) in relation to Bengal, Assam, and the Andaman and Nicobar Islands, the High Court at Calcutta;

(*b*) in relation to Madras and Coorg, the High Court at Madras;

(*c*) in relation to Bombay and British Baluchistan, the High Court at Bombay;

(*d*) in relation to the United Provinces and Ajmer-Merwara, the High Court at Allahabad;

(*e*) in relation to the Punjab and Delhi, the High Court at Lahore;

(*f*) in relation to the Provinces of Bihar and Orissa, the High Court at Patna.

(*g*) in relation to the Central Provinces and Berar, the High Court at Nagpur;

(*h*) in relation to Sind, the Judicial Commissioner's Court;

(*i*) in relation to the North-West Frontier Province, the Judicial Commissioner's Court;

(*j*) in relation to British subjects in any Indian State, that one of the aforesaid courts which the Central Government may from time to time notify in this behalf."

Omit paragraphs (3), (5), (6) and (7).

At the end of the section insert—

"(8) 'Division' means the Province or State or group of States for which an Official Trustee has been appointed under this Act."

Section 3.—Omit "at a Presidency-town" and for "Presidency" substitute "Division".

Section 4.—For sub-section (1) substitute—

"(1) The Provincial Government for each Province, and the Central Government for British subjects in any Indian State or group of Indian States, shall appoint an Official Trustee:

Provided that nothing herein contained shall be deemed to bar the appointment of the same person as Official Trustee for two or more Divisions."

In sub-section (2) omit "of any of the said Presidencies" and after paragraph (*c*) insert—

"or (*d*) in the case of a Province other than Bengal, Madras or Bombay, a person already in the service of the Crown".

Omit sub-section (3).

Section 6.—For "Presidency" substitute "Division".

Section 15.—Omit "or of the Government of India".

Section 24.—In sub-section (2) for "Secretary of State for India in Council" substitute "Government", and at the end of the sub-section insert—

"Provided that nothing in this section affects any option afforded to a claimant by section 179 of the Government of India Act, 1935."

Omit section 31.

After section 32 insert—

"Saving. 32A. The amendments of this Act which come into force on the commencement of Part III of the Government of India Act, 1935, shall not affect any legal proceedings pending in any court on that date or be construed as automatically transferring any property from any Official Trustee to any other Official Trustee: but nothing in this section shall be construed as preventing a transfer of any such property in accordance with any of the other provisions of this Act."

The Administrator-General's Act, 1913.

(III of 1913.)

Section 1.—In sub-section (2) for "British and Indian subjects of His Majesty in the territories of Native States in India" substitute "British subjects in Indian States".

Section 2.—For paragraph (3) substitute—

"(3) 'Government' or 'the Government' means, in relation to any Province, the Provincial Government, and in relation to British subjects in Indian States, the Central Government."

Omit paragraphs (7) (9), (10) and (11).

At the end of the section insert—

"(12) 'High Court' means—

(*a*) in relation to Bengal, Assam and the Andaman and Nicobar Islands, the High Court at Calcutta;

(*b*) in relation to Madras and Coorg, the High Court at Madras;

(*c*) in relation to Bombay and British Baluchistan, the High Court at Bombay;

(*d*) in relation to the United Provinces and Ajmer-Merwara, the High Court at Allahabad;

(*e*) in relation to the Punjab and Delhi, the High Court at Lahore;

(*f*) in relation to the Provinces of Bihar and Orissa, the High Court at Patna;

(*g*) in relation to the Central Provinces and Berar, the High Court at Nagpur;

(*h*) in relation to Sind, the Judicial Commissioner's Court;

(*i*) in relation to the North-West Frontier Province, the Judicial Commissioner's Court; and

(*j*) in relation to British subjects in any Indian State, that one of the aforesaid courts which the Central Government may from time to time notify in this behalf.

(13) 'Division' means the Province or State or group of States for which an Administrator-General has been appointed under this Act."

Section 3.—For sub-section (1) substitute—

"(1) The Provincial Government for each Province, and the Central Government for British subjects in any Indian State or group of Indian States, shall appoint an Administrator-General:

Provided that nothing herein contained shall be deemed to bar the appointment of the same person as Administrator-General for two or more Divisions."

In sub-section (2) omit "of any of the said Presidencies" and after paragraph (*c*) insert—

"or (*d*) in the case of a Province other than Bengal, Madras or Bombay, a person already in the service of the Crown."

Omit sub-section (3).

Section 5.—For "Presidency" substitute "Division."

Section 6.—For "Presidency" substitute "Division" and omit "at the Presidency-town."

Section 7.—Omit "at any Presidency-town" and for "Presidency" substitute "Division."

Section 8.—For "Presidency" substitute "Division."

Section 9.—For "Presidency" substitute "Division" and omit "at the Presidency-town."

Section 18.—For "Presidency" substitute "Division."

For section 23 substitute—

"23. All probates or letters of administration granted to any Administrator-General shall be granted to him by that name."

Name in which probate or letters to be granted.

Section 24.—Omit "at any Presidency-town" and for "Presidency" and "Presidencies" substitute "Division" and "Divisions" and at the end of the section insert—

"A grant made by the High Court at Rangoon before the separation of Burma from India shall have the same effect

for the purposes of this section as it would have had if the separation had not taken place."

Section 25.—For "Presidency" substitute "Division."

Section 28.—Omit "at the Presidency-town" and for "Presidency" substitute "Division."

Sections 31 and 38.—For "Presidency" substitute "Division."

Section 39.—Omit "or of the Government of India."

Section 48.—Omit "at the Presidency-town."

Section 53.—In sub-section (2) omit "at the Presidency-town"; for "Secretary of State for India in Council" substitute "Government," and at the end of the sub-section add—

"Provided that nothing in this section affects any option afforded to a claimant by section 179 of the Government of India Act, 1935."

Section 54.—For "Presidency" substitute "Division."

Section 55.—Omit "or in the town of Rangoon."

Omit section 58.

After section 59 insert—

"Saving.

59A. The amendments of this Act which come into force on the commencement of Part III of the Government of India Act, 1935, shall not affect the jurisdiction of any court with respect to any proceedings then pending before it and shall not be construed as transferring the administration of any property or estate then in the hands of any Administrator-General to any other Administrator-General."

The Indian Companies Act, 1913.

(VII of 1913.)

Throughout the Act, except as expressly provided for "Local Government" substitute "Central Government," and for "Act of the Governor-General in Council" substitute "Indian law."

Section 2.—After paragraph (16) insert—

"(17) 'trading corporation' means a trading corporation within the meaning of Item 33 in List I in the Seventh Schedule to the Government of India Act, 1935."

After section 2 insert—

"Provisions as to companies registered in Burma or Aden before separation from India.

2A.—Notwithstanding anything in the last preceding section, a company which was immediately before the separation of Burma and Aden from India a company as defined by the said section, being a company the registered office whereof is in Burma or Aden,—

(*a*) shall be deemed for the purposes of this Act to be a company registered and incorporated outside British India, and

(*b*) shall not, unless the subject matter or context so requires, be included in the expressions "company," "existing company," "public company," and "private company":

Provided that—

(i) for the purposes of section 277 of this Act such a company shall, for a period of six months from the separation, be deemed to be a company incorporated and registered in British India;

(ii) the separation of Burma and Aden from India shall not render valid any mortgage or charge which, immediately before that date, was void against the liquidator or creditors of such a company."

Sections 6, 7 and 8.—In paragraph (iii) of sub-section (1) after "the objects of the company" insert "and, except in the case of trading corporations, the territories to which they extend."

Section 11.—In sub-section (4) omit "under the hand of one of the Secretaries to such Government."

After section 42 insert—

"42A.—(1) The provisions of sections 41 and 42 shall apply in relation to Burma as they apply in relation to the United Kingdom

(2) In the application of the said provisions to Burma, references to a British register shall be construed as references to a Burma register."

Section 87C.—In sub-section (3) for "Government" substitute "any Government."

Section 109.—At the end of the section insert—

"In this section 'British India' does not include Burma or Aden, whatever the date of the mortgage or charge in question."

Section 232.—For "the Government" substitute "the Crown."

Section 245.—For "the Governor-General in Council" substitute "the Central Government or the Crown Representative."

Section 286.—Omit sub-section (3).

After section 289 insert—

"289A.—The powers conferred by this Act on the Central Government shall, in relation to companies with objects confined to a single Province which are not trading corporations, be powers of the Provincial Government."

"Application of Act to non-trading companies with purely Provincial objects.

The Destructive Insects and Pests Act, 1914.

(II of 1914).

Section 2.—In paragraph (*b*) after "air" insert "across any customs frontier as defined by the Central Government."

Section 5.—Omit "subject to the control of the Governor-General in Council."

The Indian Copyright Act, 1914.

(III of 1914).

Section 3.—The words "the Gazette of India" shall stand unmodified.

Section 6.—For "Secretary of State for India in Council" substitute "Central Government."

The Indian Motor Vehicles Act, 1914.

(VIII of 1914.)

Section 1.—In sub-section (2) omit "Burma."

Section 9.—For "the Governor-General in Council" substitute "the Provincial Government of that area."

Section 10.—In the proviso to sub-section (2) after "valid" insert "in any area," and for "the Governor-General in Council" substitute "the Provincial Government of that area."

Section 14.—In sub-section (1) after "may" insert "for the purpose of implementing any international Convention relating to motor traffic."

The Local Authorities Loans Act, 1914.

(IX of 1914.)

Section 2.—At the end of the section insert—

" 'The Government' or 'the appropriate Government' means, in relation to cantonment authorities and in relation to port authorities in major ports, the Central Government, and in relation to other local authorities, the Provincial Government."

Section 3.—For "Local Government" and "Governor-General in Council" substitute "appropriate Government."

Sections 4 and 5.—For "Local Government" substitute "appropriate Government."

Section 6.—For "Governor-General in Council" substitute "appropriate Government."

For section 8 substitute—

"Application of Act to loans existing previous to the fifth September 1871.

8. The remedy mentioned in section 5 shall be available for the recovery of any money lent by the Secretary of State in Council to any local authority before the fifth day of September, eighteen hundred and seventy-one, and the interest due on such money."

Schedule 1.—The entries relating to the Municipal Committee of Rangoon and the Commissioners for the port of Rangoon shall be omitted.

The North-West Frontier Constabulary Act, 1915.

(XIII of 1915.)

Throughout the Act, except as otherwise provided, for "Local Government" substitute "Central Government."

Section 2.—At the end insert—

"In this section references to appointments by the Central Government shall be construed as including references to appointments made before the commencement of Part III of the Government of India Act, 1935, by the Provincial Government."

Section 3.—For the words to "to be called" substitute "There shall continue to be a force, maintained by the Central Government, and called."

Section 4.—Omit "with the previous sanction of the Governor-General in Council."

Section 9.—In clause (*m*) for "Government" substitute "the Crown."

Section 20.—Omit "subject to the control of the Governor-General in Council."

Section 21.—In clause (*b*) omit "subject to the provisions of section 4."

The Benares Hindu University Act, 1915.

(XVI of 1915.)

Section 5.—This section shall stand unmodified, and at the end of the section insert—

"(2) In the discharge of his functions as Lord Rector, the Governor-General shall exercise his individual judgment."

Section 6.—For sub-section (1) substitute—

"(1) The Governor-General, exercising his individual judgment, shall nominate such person as he thinks fit to be the Visitor of the University."

Section 16.—For "the Government" substitute "any Government in British India" and for "Act of the Governor-General in Council" substitute "Act of the Central Legislature."

Schedule 1.—For paragraph (1)(i) of Statute 3 substitute—

"(i) all Governors and Chief Commissioners in British India."

The Indian Medical Degrees Act, 1916.

(VII of 1916.)

Section 3.—For "Governor-General in Council" substitute "Provincial Government."

The Schedule.—For "Act of the Governor-General in Council" substitute "Act of the Central Legislature."

The Hindu Disposition of Property Act, 1916.

(XV of 1916.)

Section 1.—For "Governor-General in Council" substitute "Provincial Government".

Section 5.—For "Governor-General in Council" substitute "Provincial Government" and for "British India" substitute "the Province".

The Inland Steam-vessels Act, 1917.

(I of 1917.)

Section 1.—In sub-section (3) for "Governor of Fort St. George in Council" substitute "Provincial Government" and for "under his administration" substitute "mentioned in sub-section (2) and under its administration".

Section 6.—For "Bombay or Rangoon" substitute "or Bombay".

After section 10 insert—

10A.—A certificate of survey shall have effect throughout the Province in which it was granted:

Provided that such a certificate may be endorsed by the Provincial Government of any other Province, or with the general or special sanction of the Provincial Government of that other Province, by the authority granting it, so as to have effect in that other Province, or any part thereof, and, if so endorsed shall have effect accordingly."

Section 11.—After "shall not be in force" insert "in any Province" in paragraph (*c*) for "by any Local Government" substitute "by the Provincial Government of the Province in which it was granted"; and at the end of the section insert the following paragraph—

"A certificate of survey shall not be in force in any Province by virtue of any endorsement in respect of that Province, after notice has been given by the Provincial Government of that Province, to the owner or master of a steam vessel, that that Government has cancelled or suspended the endorsement."

Section 13.—For "A certificate of survey may be suspended or cancelled by any Local Government if it has reason to believe" substitute "A certificate of survey or any endorsement thereon made under section 10A may be suspended or cancelled by the Government of the Province in which the certificate was granted or in respect of which the endorsement was made, as the case may be, if that Government has reason to believe".

Section 14.—At the end of the section insert the following paragraph—

"Where an endorsement on any certificate of survey for any Province has been suspended or cancelled, the Provincial Government of that Province may require the certificate of survey to be delivered up to such officer as that Government may by notification

in the Official Gazette appoint in this behalf, in order that particulars of the suspension or cancellation of the endorsement may be noted on the certificate."

Section 15.—For the words from the beginning to "cancelling the certificate" substitute "If a Provincial Government suspends or cancels an endorsement made under section 10A on a certificate of survey, it".

Sections 22, 22A and 28.—For "in its discretion" substitute "if it thinks fit".

Section 29.—Omit "with the previous sanction of the Governor-General in Council".

Section 31.—For the words from the beginning to "and a licence" substitute "A certificate of competency or service or a licence granted under this Chapter".

Section 45.—For the words from the beginning to "in the following cases, namely" substitute "Any certificate granted or any endorsement made under Chapter III may be suspended or cancelled by the Government of the Province in which the certificate was granted or, as the case may be, in respect of which the endorsement was made, in the following cases, namely" and in the proviso after "a certificate" insert "or endorsement".

Section 47.—For the words from the beginning to "cancelling the certificate" substitute "If a Provincial Government suspends or cancels an endorsement under this Chapter, it" and for the second "such certificate" substitute "the certificate".

Sections 49 and 54A.—For "Governor-General in Council" substitute "Provincial Government".

Section 68.—Omit "with the previous sanction of the Governor-General in Council".

Section 69.—For "Governor-General in Council" substitute "Provincial Government" and for "or the Government of India" substitute "or any Government in British India".

Section 70.—At the end of the section insert—

"Provided that no such notification shall be made after the end of March, 1937".

Section 73.—For "Governor-General in Council" substitute "Provincial Government".

The Motor Spirit (Duties) Act, 1917.

(II of 1917.)

Section 4.—For "Local Government" substitute "Central Government".

The Destruction of Records Act, 1917.

(V of 1917.)

Omit section 2.

Section 3.—In paragraph (*c*) of sub-section (2) for "the Local Government or any officer specially authorised in that behalf by the Local Government" substitute—

"(i) if the documents relate to purposes of a Province, the

Provincial Government or any officer specially authorised in that behalf by that Government;

(ii) in any other case, the Central Government or an officer specially authorised in that behalf by that Government".

Substitute for sub-section (3)—

"(3) Rules made under this section by any High Court or by a Chief Controlling Revenue Authority or by an officer specially authorised in that behalf by any Provincial Government shall be subject to the previous approval of the Provincial Government; and rules made by an officer specially authorised in that behalf by the Central Government shall be subject to the previous approval of the Central Government."

The King of Oudh's Estate Validation Act, 1917.

(XII of 1917.)

Section 4.—In clause (i) for "Local Government" substitute "Central Government".

The Patna University Act, 1917.

(XVI of 1917.)

Throughout the Act, except as otherwise provided, for "Local Government" substitute "Central Government".

Section 2.—Omit the definition of "Local Government".

Section 5.—For sub-section (1) substitute—

"(i) Such person as the Governor-General exercising his individual judgment, may nominate shall be the Chancellor".

Section 7.—In sub-section (1), under Class I, for clause (ii) substitute—

"(ii) The Ministers of the Governor of Bihar and the Minister for Education of the Governor of Orissa";

In clause (iv) after "and" insert "the Director of Public Instruction";

In clause (v) after "and" insert "the Director of Health and Prison Services";

In clause (vi) after "and" insert "the Director of Industries";

Under Class III for clause (v) substitute—

"(v) Two persons elected by the Legislative Assembly of Bihar from among their own body;

(vi) One person elected by the Legislative Council of Bihar from among their own body;

(vii) Two persons elected by the Legislative Assembly of Orissa from among their own body:"

And in the proviso for "the Orissa Division" substitute "Orissa".

Section 8.—In clause (ii) of sub-section (i) after "and" insert "the Director of Public Instruction".

Section 11.—For "and Orissa" substitute "or of Orissa".

Section 14.—For "and Orissa" substitute "or in Orissa".

The Transfer of Property (Validating) Act, 1917.

(XXVI of 1917.)

Section 1.—For "Governor-General in Council" substitute "Provincial Government of any Province"; and for "any other part of British India specified in the notification" substitute "the whole or any part of that Province".

The Cinematograph Act, 1918.

(II of 1918.)

Section 4.—Omit "or in the town of Rangoon".

Section 7.—In sub-section (1) omit "authorised in this behalf by the Governor-General in Council" and for "in the service of Government" substitute "in the service of the Crown".

In sub-section (5) omit "or in the town of Rangoon".

In sub-section (6) omit "in its discretion".

The Indian Companies (Foreign Interests) Act, 1918.

(XX of 1918.)

Section 2.—For "Act of the Governor-General in Council" substitute "Act of the Central Legislature".

The Cotton Cloth Act, 1918.

(XXIII of 1918.)

Throughout the Act for "Governor-General in Council" substitute "Provincial Government".

Section 12.—In sub-section (3) omit "the Gazette of India or" and "as the case may be".

The Local Authorities Pensions and Gratuities Act, 1919.

(I of 1919.)

Section 2.—For "the service of Government" substitute "service under the Crown"; and at the end of the section add "and, the 'appropriate Government' means, in relation to cantonment authorities and port authorities in major ports, the Central Government, and in relation to other authorities, the Provincial Government".

Section 3.—For "the service of Government" substitute "service under the Crown".

Section 4.—For "the Governor-General in Council" substitute "the Central Government or any Provincial Government"; for "the local Government" substitute "the appropriate Government"; and for "under Government" substitute "under the Crown".

Section 5.—For "Local Government" substitute "appropriate Government".

The Excess Profits Duty Act, 1919.

(X of 1919.)

Section 2.—Omit the definition of Chief Revenue Authority.

Section 8.—For "Local Government" substitute "Central Government".

The Poisons Act, 1919.

(XII of 1919.)

Section 2.—Omit "Subject to the control of the Governor-General in Council".

Section 3.—After "British India" insert "across any customs frontier defined by the Central Government".

Section 4.—Omit "subject to the control of the Governor-General in Council".

Section 6.—Omit "into British India", and after "without a licence" insert "into British India across a customs frontier defined by the Central Government".

Section 8.—Omit "and subject to the control of the Governor-General in Council" and after "of this Act" insert "except section 3".

Section 9.—In sub-section (2) omit "in its discretion" and after "of this Act" insert "except section 3".

The Indemnity Act, 1919.

(XXVII of 1919.)

Throughout the Act for "officers of Government" and "officer of Government" substitute "officers of the Crown" and "officer of the Crown".

Section 5.—For "appointed by the Government" substitute "appointed by the Central Government".

Section 6.—For "on behalf of the Government" substitute "on behalf of the Crown".

The Provincial Insolvency Act, 1920.

(V of 1920.)

Long Title.—For "Rangoon" substitute "Karachi."

Preamble.—For "the Towns of Rangoon and Karachi" substitute "the town of Karachi."

Section 2.—Omit "the town of Rangoon."

Section 79.—For sub-section (1) substitute—

"(1) The High Court may, with the previous sanction of the Provincial Government, make rules for carrying into effect the provisions of this Act."

In sub-section (3) omit "in the Gazette of India or" and "as the case may be."

The Indian Securities Act, 1920.

(X of 1920.)

Section 2.—At the end insert—

"(*c*) 'the Government' or 'Government' in relation to any loan or security, means the Government raising the loan or issuing the security."

Sections 6, 7 and 9.—For "Governor-General in Council" substitute "Government."

Section 13.—For "Local Government" substitute "Government."

Section 24.—For "Governor-General in Council" substitute "Government."

After section 25 insert—

"26. For the avoidance of doubt it is hereby declared that the rights of all persons in relation to Indian securities are to be determined, in connection with all such questions as are dealt with by this Act in relation to Government securities, by the law of British India." **Provision as to Indian securities.**

The Charitable and Religious Trusts Act, 1920.

(XIV of 1920.)

Section 1.—For "Governor-General in Council" substitute "Government of any Province" and for "any specified Province or area" substitute "that Province or any specified area therein."

The Indian Red Cross Society Act, 1920.

(XV of 1920.)

Schedule II.—For the entry relating to Bombay substitute—

"Bombay	10	..	..	7·8
Western India States		..	..	3
Sind		..	..	1·2"

The Jagannath College Act, 1920.

(XVI of 1920.)

Section 2.—For "the Governor of Bengal in Council (hereinafter referred to as 'the Local Government')" substitute "the Crown, for the purposes of the Province of Bengal."

Section 3.—For the first "Local Government" substitute "Crown" and for "of Government" substitute "of the Crown."

The Dacca University Act, 1920.

(XVIII of 1920.)

Section 2.—Omit clause (*c*).

Section 7.—Substitute the following section:—

"Visitation 7.—(1) The Provincial Government shall have the right to cause an inspection to be made by such person or persons as it may direct of the University, its buildings, laboratories and equipment, and of any institutions associated with the University, and also of the examinations, teaching and other work conducted or done by the University, and to cause an inquiry to be made in like manner in respect of any matter connected with the University.

The Provincial Government shall in every case give notice to the University of its intention to cause an inspection or inquiry to be made, and the University shall be entitled to be represented thereat.

(2) The Provincial Government shall communicate to the Executive Council its views with reference to the results of any such inspection or inquiry, and shall, after ascertaining the opinion of the Executive Council thereon, advise the University upon the action to be taken.

(3) The Executive Council shall report to the Provincial Government the action, if any, which is proposed to be taken or has been taken upon the results of the inspection or inquiry.

(4) Where the Executive Council does not, within a reasonable time, take action to the satisfaction of the Provincial Government, the Governor, exercising his individual judgment, may, after considering any explanation furnished or representation made by the

Executive Council, issue such directions as he may, exercising his individual judgment, think fit, and the Executive Council shall comply with those directions."

Section 9.—"Governor of Bengal" shall stand unmodified.

Section 16.—In sub-section (1) at the end of clause (*x*) insert "including persons appointed to represent Assam" and omit clause (*xi*).

In sub-section (2) omit "(*xi*)."

Sections 27 and 34.—For "Governor-General in Council" substitute "Provincial Government."

Section 37.—For "to the Local Government and to the Governor-General in Council" substitute "and to the Provincial Government."

Section 44.—After "by the Government" insert "under which he is serving;" for "Government service" substitute "the service of the Crown" and for "of the Government" substitute "of that Government."

Section 46.—For "Governor-General in Council" substitute "Provincial Government."

Section 47.—After "maintained" insert "in Bengal" and for "Governor-General in Council" substitute "Provincial Government."

The Schedule.—In Statute 2 (1) omit clause (i) and in clause (xviii) for "Council" substitute "Assembly."

The Indian Passport Act, 1920.

(XXXIV of 1920.)

Section 4.—For "Local Government" substitute "Central Government."

Section 5.—For "Local Government" substitute "Central Government" and for "officer of Government" substitute "officer of the Crown."

The Indian Elections Offences and Inquiries Act, 1920.

(XXXIX of 1920.)

Long Title and Preamble.—After "the Government of India Act" insert "or the Government of India Act, 1935."

Section 4.—For clause (*b*) substitute—

"(*b*) 'election' means an election to a Chamber of any Legislature or Legislative Council constituted under the Government of India Act or the Government of India Act, 1935."

In clause (*c*) for "Governor-General, Governor or Lieutenant-Governor" substitute "Governor-General or Governor."

Section 12.—Omit "or Lieutenant-Governor."

Section 13.—For the proviso substitute—

"Provided that the Governor-General, in the case of an election to a Chamber of the Federal Legislature or the Indian Legislature, and the Governor, in the case of an election to a Chamber of a Provincial Legislature, may, in his discretion, exempt any such person from such disqualification."

After section 14 add—

"Special provision as to elections under Government of India Act, 1935.

15. As respects elections to a Chamber of a Legislature constituted under the Government of India Act, 1935, this Part of this Act shall have effect subject to any relevant provision of any Order in Council or rules made under that Act in relation to such elections."

The Aligarh Muslim University Act, 1920.

(XL of 1920.)

Section 6.—For "the Government" substitute "any Government in British India."

Section 13.—Sub-section (1) shall stand unmodified, and at the end of the section insert—

"(6) In the discharge of his functions as Lord Rector, the Governor-General shall exercise his individual judgment."

Section 14.—For sub-section (1) substitute—

"(1) The Visiting Board of the University shall consist of such members as the Governor-General, exercising his individual judgment, may nominate."

The Schedule.—In paragraph 1 for "Heads of Local Governments" substitute "Governors and Chief Commissioners in British India."

The Imperial Bank of India Act, 1920.

(XLVII of 1920.)

Section 10.—For "the Government" substitute "any Government."

Sections 13A, 23 and 25.—After "British India" insert "or British Burma."

Section 28.—For "officers of the Government" and "officer of Government" substitute "officers of the Crown" and "officer of the Crown."

Section 29.—After "British India" insert "or British Burma."

Schedule I, Part I.—In clause (*a*) (i) for "Act of the Governor General in Council" substitute "Indian or Burman law" and for "a local Government" substitute "a Provincial Government, the Government of Burma;" in clause (*a*) (iii) after "British India" insert "or British Burma," and in clause (*a*) (vi) omit the proviso.

Schedule I, Part II.—In clause (4) after "the Indian Trusts Act, 1882" insert "or the corresponding provisions for the time being in force in Burma."

Schedule II.—In regulation 39 after "British India" insert "or British Burma" and for "officer of Government" substitute "officer of the Crown."

In regulation 61 after "British India" insert "or British Burma."

In regulation 62 after "India" insert "or Burma."

The Indian Territorial Force Act, 1920.

(XLVIII of 1920.)

After section 2 insert—

"2A. For the purposes of this Act, the Provinces of Bombay and Sind, and the Provinces of Bihar and Orissa, shall be deemed to be one Province until in either case the Central Government by notification in the Official Gazette otherwise directs." Special provisions as to Sind and Orissa

Section 4A.—Omit "granted by the Governor-General in the name of His Majesty" and "granted by the Governor-General."

Section 11.—The references to the Governor-General shall stand unmodified.

Section 12.—For sub-section (1) substitute—

"(1) In each Province in which any unit or units of the Indian Territorial Force is or have been constituted, the Central Government shall constitute a Provincial Advisory Committee for all such units and a Unit Advisory Committee for each of such units."

The Auxiliary Force Act, 1920.

(XLIX of 1920.)

Section 1.—For "within the territories of any Prince or Chief in India" substitute "in any Indian State or tribal area."

Section 5.—Omit "or of His Majesty's Royal Indian Marine."

Section 18.—For the words from "Governor-General in Council" to "as the case may be" substitute "Central Government and published in the Official Gazette."

Section 21.—The reference to the Governor-General shall stand unmodified.

Section 24.—For "Government" substitute "the Crown."

Section 28.—For "Local Government" substitute "Central Government" and for "service of Government" substitute "service of the Crown."

Section 30.—In clause (*g*) of sub-section (2) for "authorities" substitute "authority" and omit "respectively" and the "Local Government and."

The Legislative Assembly (Deputy President's) Salary Act, 1921.

(II of 1921.)

After section 3 insert—

"4. On the establishment of the Federation of India this Act shall cease to have effect." Act to cease on establishment of Federation.

The Enemy Missions Act, 1921.

(IX of 1921.)

In the Schedule omit all the entries relating to the Burma Mission Trust.

The Indian Emigration Act, 1922.

(VII of 1922.)

Section 2.—For "Local Government" substitute "Central Government".

Section 3.—For "Subject to the control of the Governor-General in Council the Local Government" substitute "The Central Government"; for "within the territories administered by it" substitute "in British India"; and in subsection (2) for "Local Government" substitute "Central Government".

Section 4.—For "Local Government" substitute "Central Government".

Section 5.—For "Local Government" substitute "Central Government" and omit "subject to the control of the Governor-General in Council".

Sections 6, 8 and 9.—For "Local Government" substitute "Central Government".

Section 10.—For "Indian Legislature" substitute "Central Legislature".

Section 11.—For subsection (2) substitute—

"(2) Where the Protector of Emigrants for any port has reason to believe that such a state of affairs as is described in subsection (1) exists in any country to which emigration for the purpose of unskilled work is lawful, he may, by notification in such manner as he thinks fit, declare that emigration to that country for the purpose of unskilled work from that port shall cease to be lawful pending a reference to the Central Government."

In subsection (3) for "Local Government" substitute "Protector of Emigrants".

Section 12.—For "Local Government" substitute "Protector of Emigrants".

Section 13.—For "Indian Legislature" substitute "Central Legislature".

Section 16.—For "the Local Government having jurisdiction at the port from which such person is to depart" substitute "the Central Government".

Sections 17 to 20.—For "Local Government" substitute "Central Government".

Section 21.—For "Indian Legislature" substitute "Central Legislature".

Section 23.—Omit "Subject to the control of the Governor-General in Council" and for "Local Government" substitute "Central Government".

The Delhi University Act, 1922.

(VIII of 1922.)

Throughout the Act the references to the Governor-General (but not the references to the Governor-General in Council) shall stand unmodified and for "the Council of State and the Legislative Assembly" substitute "the Chambers of the Central Legislature".

The Civil Procedure (Amendment) Act, 1922.

(IX of 1922.)

Section 1.—Omit "with the previous sanction of the Governor-General in Council".

The Indian Income-tax Act, 1922.

(XI of 1922.)

Section 1.—For subsection (2) substitute—

"(2) It extends to the whole of British India, including British Baluchistan and the Sonthal Parganas, and applies also, within the Indian States and the tribal areas, to British subjects who are in the service of the Crown or of a local authority established in the exercise of the powers of the Crown Representative or the Central Government in that behalf, and to all other servants of the Crown in the said States and areas."

Section 2.—In subsection (1) for "officers of Government" substitute "officers of the Crown"; and in subsection (8) for "the Local Government" substitute "the Central Government".

Section 3.—For "Act of the Indian Legislature" substitute "Act of the Central Legislature".

Section 5.—For the first sentence of subsection (4) substitute "The Central Government may appoint for any area as many Assistant Commissioners of Income-tax and Income-tax Officers as it thinks fit".

Section 7.—In subsection (1) for the first "Government" substitute "the Crown", and for "deducted under the authority of the Government from the salary of any individual" substitute "deducted from the salary payable by or on behalf of the Crown to any individual, being a sum deducted in accordance with the conditions of his service."

In subsection (2) for "by Government" substitute "by or on behalf of the Crown" and for "by the Governor-General in Council" substitute "in the exercise of the powers of the Crown Representative or the Central Government in that behalf".

Section 18.—For "on behalf of Government" substitute "on behalf of the Crown".

Section 46.—For subsection (6) substitute—

"(6) If the recovery of income-tax in any area has been entrusted to a Provincial Government under section 124 (1) of the Government of India Act, 1935, the Provincial Government may direct with respect to that area or any part thereof, that income-tax shall be recovered therein with, and as an addition to, any municipal tax or local rate, by the same person and in the same manner as the municipal tax or local rate is recovered."

Section 55.—For "Indian Legislature" substitute "Central Legislature".

Section 67.—For "Government officer" substitute "officer of the Crown".

The Ranchi Mental Hospital Act, 1922.

(XIII of 1922.)

Section 2.—In clause (*c*) omit "and Orissa"; omit clause (*e*); and in clause (*f*) for "Local Government" substitute "Central Government".

Section 4.—In subsection (1) for clauses (*a*) to (*d*) substitute—

"(*a*) a Chairman to be appointed by the Central Government;

(*b*) eleven Trustees appointed by the Central Government, of whom four shall represent Bengal, two the United Provinces, two the Punjab, two Bihar and one the Central Provinces and Berar."

Section 8.—For "The Local Government may, at the request of the Board, acquire" substitute "The Central Government may, at the request of the Board, cause to be acquired"; and for "the compensation awarded under that Act and of the charges incurred by the Local Government in connection with the proceedings" substitute "the expenses incurred by the Central Government on account of, or in connection with, the acquisition".

Section 10.—For the first "Government" substitute "the Central Government or any Provincial Government"; omit "under the provisions of Section 96B of the Government of India Act"; for "partly by Government" substitute "partly by that Government" and for "the Local Government" substitute "that Government".

Section 12.—For "Local Government" substitute "Central Government".

Section 13.—For "Local Government" substitute "Central Government"; in subsection (3) for "with the previous sanction of the Governor-General in Council, by notification in the Gazette of India and in the Bihar and Orissa Gazette" substitute "by notification in the Official Gazette"; in subsection (4) for "vest in the Local Government on behalf of His Majesty" substitute "vest in His Majesty for the purposes of the Central Government"; and omit subsection (5).

For section 14 substitute—

Dessolution of the Board.

14. The Central Government may by notification in the Official Gazette declare that, with effect from such date as may be specified in the notification, the Board shall be dissolved, and on the making of such a declaration, all funds and other property vested in the Board shall vest in His Majesty for the purposes of the Central Government."

Omit section 15.

Section 16.—In subsection (1) for "Local Government" substitute "Central Government" and omit "subject to rules made under section 15".

In subsection (2), in clause (*b*) for "Local Government" substitute "Central Government"; in clause (*j*) for "Government

servants" substitute "servants of the Crown"; omit "and" at the end of clause (*n*); and after clause (*o*) insert—

"(*p*) the qualifications for being appointed a Trustee;

(*q*) the circumstances in which and the authority by which any Trustee may be removed;

(*r*) the filling of any vacancy in the office of a Trustee, whether temporarily or otherwise;

(*s*) the term of office of Trustees; and

(*t*) the allowances, if any, payable to the Trustees from the funds of the Board on account of attendance at meetings of the Board."

Section 17.—For "sections 15 and 16" substitute "section 16", and for "Local Government" substitute "Central Government".

Section 18.—Omit "and in the Bihar and Orissa Gazette".

Section 21.—For "Government" substitute "Central Government".

The Police (Incitement to Disaffection) Act, 1922.

(XXII of 1922.)

Section 3.—After "British India" insert "or British Burma".

Section 5.—Omit "or the town of Rangoon".

The Indian States (Protection Against Disaffection) Act, 1922.

(Governor-General's Act.)

Section 5.—For "Governor-General in Council" substitute "Provincial Government".

The Cotton Transport Act, 1923.

(III of 1923.)

Section 8.—For "the Legislative Council of the Province" substitute "the Legislative Assembly of the Province"; for "of the Legislative Council" substitute "of that Assembly"; and at the end of the section insert—

"Provided that if the Provincial Legislature has two Chambers, the notification must be laid in draft before and be approved by Resolutions of, both Chambers, either without modifications or additions, or with modifications or additions approved by both Chambers."

The Indian Mines Act, 1923.

(IV of 1923.)

Throughout the Act, except as otherwise provided, for "Local Government" substitute "Central Government".

Omit section 2.

Section 7.—For "Government" substitute "Crown".

Section 9.—For "the Governor-General in Council or of the Local Government" and for "the Governor-General in Council or the Local Government" substitute "the Central Government".

Section 10.—For "for the province, or for any part of the province" substitute "for any part of British India" and omit "in the province".

Section 30.—Omit "subject to the control of the Governor-General in Council".

Section 31.—In subsection (3A) for the words from "in the province" to "make the rule" substitute "in the part of British India affected by the rule" and in subsection (4) omit "and the local Official Gazette, respectively".

Section 46.—Omit subsection (2).

Section 47.—Omit "and every Local Government" and "by any authority subject to his or its control as the case may be".

The Indian Boilers Act, 1923.

(V of 1923.)

Section 3.—In subsection (1) for "the Royal Indian Marine Service" substitute "the Royal Indian Navy".

In subsection (2) for "Governor-General in Council" substitute "Safety Controlling Authority"; for "by the Government" substitute "by the Federal Railway Authority or by any Provincial Government"; and at the end of the subsection insert—

"In this subsection Safety Controlling Authority has the same meaning as in the Indian Railways Act, 1890."

Section 4.—For "Governor-General in Council" substitute "Provincial Government".

Section 28.—For "Governor-General in Council" substitute "Provincial Government"; and omit clause (*f*) and the word "and" immediately preceding it.

Section 29.—In clause (*a*) omit "for regulating their salary, allowances and conditions of service"; and for clause (*j*) subsitute—

"(*j*) generally to provide for any other matter" and omit the proviso.

Section 31.—Omit "the Gazette of India and" and "respectively".

The Contonments (House-Accommodation) Act, 1923.

(VI of 1923.)

Section 1.—Omit "except Aden".

Section 3.—For "Local Government" substitute "Central Government" and omit "with the previous sanction of the Governor-General in Council" and "situate in the Province".

For section 4 substitute—

"4. Nothing in this Act shall affect the provisions of any written Crown contract unless all the parties to that contract consent in writing to be bound by the terms of this Act." Saving of written Instruments.

Section 5.—For "the Government" substitute "the Central Government".

Section 6.—For "belonging to Government" substitute "belonging to the Crown".

Section 7.—For "the Government" substitute "the Central Government".

Section 13.—In subsection (1) for "Local Government" substitute "Central Government" and for "for sale to the Government" substitute "for sale to the Central Government". In subsection (2) for "the Government" substitute "the Central Government".

Section 14.—For "the Secretary of State for India in Council" substitute "the Central Government"; for the first "the said Secretary of State in Council" substitute "the Central Government" and for the second "the said Secretary of State in Council" substitute "the Crown".

Section 17.—For "the Government" substitute "the Central Government".

The Indian Naval Armament Act, 1923.

(VII of 1923.)

Throughout the Act for "Local Government" substitute "Central Government".

Section 7.—Omit "or any gazetted officer of the Royal Indian Marine Service".

Section 9.—Omit "subject to the control of the Governor-General in Council".

The Workmen's Compensation Act, 1923.

(VIII of 1923.)

Section 2.—In subsection (1) in clause (*n*) omit "or of the Royal Indian Marine Service".

In subsection (2) for "of the Government" substitute "acting on behalf of the Crown",

In subsection (3) for "Governor-General in Council" substitute "Provincial Government" and, after "apply" where it first occurs, insert "within the Province".

Section 3.—For "Governor-General in Council" substitute "Provincial Government and after "the diseases which" and "apply" insert "within the Province".

Section 16.—For "Governor-General in Council" substitute "Provincial Government".

Section 21.—In subsection (2) for "the Governor-General in Council" substitute "the Provincial Government of that Province".

Section 32.—In subsection (1) for "Governor-General in Council" substitute "Provincial Government".

In subsection (2) omit "and" at the end of clause (*h*); omit clause (*i*); insert, as clauses (*i*) to (*n*), clauses (*a*) to (*f*) of section 33; insert "and" at the end of clause (*m*); and omit "and" at the end of clause (*n*).

Subject as aforesaid omit section 33.

Section 34.—In subsection (1) for "sections 32 and 33" substitute "section 32".

In subsection (2) omit "or section 33".

In subsection (3) omit "the Gazette of India or" and "as the case may be".

The Indian Cotton Cess Act, 1923.

(XIV of 1923.)

Section 1.—In subsection (2), for "except Aden" substitute "and including also Berar".

Section 2.—For "Local Government" substitute "Central Government".

Section 4.—For clause (ii) substitute—

"(ii) six persons to be nominated by the Central Government to represent respectively the Agricultural Departments of the Provincial Governments of Madras, Bombay, Sind, the United Provinces, the Punjab, and the Central Provinces and Berar."

For clause (v) substitute—

"(v) four persons nominated by the Central Government to represent the cotton manufacturing or cotton ginning industry, of whom two shall be nominated to represent the industry in the Central Provinces and Berar, one to represent the industry in Madras and one to represent the industry in the Punjab."

In clause (vi) for "the Local Government of" substitute "the Central Government to represent".

For clause (viii) substitute—

"(viii) ten persons nominated by the Central Government to represent the cotton growing industry of whom two shall be nominated to represent the industry in Madras, two to represent the industry in the United Provinces, two to represent the industry in the Punjab, two to represent the industry in the Central Provinces and Berar, one to represent the industry in Bombay and one to represent the industry in Sind".

Sections 9, 10 and 11.—For "Local Government" substitute "Central Government".

Section 14.—After "His Majesty" insert "for the purposes of the Central Government".

The Indian Official Secrets Act, 1923.

(XIX of 1923.)

Section 1.—For "the dominions of Princes and States in India in alliance with His Majesty" substitute "any Indian State".

Section 2.—After paragraph (1) insert—

"(1A) References to a department of the Government include the departments of any Government in British India and any department of the Crown Representative, and include also the Federal Railway Authority."

In paragraph (10) omit "or by any Local Government".

Section 13.—In subsection (1) for "Local Government" substitute "appropriate Government"; in subsection (3) for "Governor-General in Council" substitute "appropriate Government" and omit "the Local Government"; and at the end of the section insert—

"(5) In this section, the appropriate Government means—

(*a*) in relation to any offences under section 5 not connected with a prohibited place or with a foreign power, the Provincial Government; and

(*b*) in relation to any other offence, the Central Government".

The Indian Merchant Shipping Act, 1923.

(XXI of 1923.)

Throughout the Act, save as otherwise provided, for "Secretary of State for India in Council" substitute "Central Government".

Section 2.—After "the continent of India" insert "or in Burma" and at the end of the section add—

"(2) As from the commencement of Part III of the Government of India Act, 1935, a British ship registered, whether before or after that date, in Burma or Aden shall not be deemed for the purposes of any enactment relating to British ships registered in British India to be such a ship so registered."

Section 4.—Omit "or the Government".

Omit section 4A.

Section 17.—For "Royal Indian Marine" substitute "Royal Indian Navy".

Section 31.—For "Government" substitute "the Central Government".

Section 37A.—Omit "or between Aden and Perim" and after "Ceylon" insert "or in Burma".

38.—For "Government" substitute "the Central Government".

Section 51.—Omit "by the Secretary of State for India in Council, with the concurrence of the Lords Commissioners of His Majesty's Treasury".

Section 109.—For "Government" substitute "the Central Government".

Section 131.—For "Bombay or Rangoon" substitute "or Bombay".

Section 146.—In clause (*e*) of sub-section (1) omit "Rangoon" and after "in British India" insert "to Burma".

Section 147.—For "the dominions of Princes and States in India" substitute "any Indian State".

Section 159.—For "Government" substitute "the Central Government".

Omit sections 185 to 188.

Section 203.—Omit "other than Aden".

Omit section 204.

Section 205.—In sub-section (1) (*a*) omit "where any voyage does not begin at Aden".

Section 209.—For "become the property of Government" substitute "vest in His Majesty for the purposes of the Central Government" and for "shall be paid to Government" substitute "shall be paid to the Central Government".

Section 213.—In clause (*s*) of sub-section (1) for "Government" substitute "the Crown".

Section 218.—For "in India and Ceylon" substitute "within India, Burma and Ceylon".

Section 233.—For "Government" substitute "Central Government".

Section 234.—For "Government" substitute "the Central Government".

Section 237.—For "Government" substitute "Central Government".

Sections 249 and 282.—For "Local Government" substitute "Central Government".

Section 284.—For "Royal Indian Marine Service" substitute "Royal Indian Navy".

The Malkharoda and Gaontia Villages Laws Act, 1923.

(XXII of 1923.)

Section 4.—For "Government" substitute "Crown".

After section 5 insert—

"Saving as to territory subsequently transferred to Orissa

6. This Act shall have effect subject to any provisions contained in or made by virtue of the Government of India (Constitution of Orissa) Order, 1936."

The Mussalman Wakf Act, 1923.

(XLII of 1923.)

Section 6.—For "Local Government" substitute "Central Government".

The Cantonments Act, 1924.

(II of 1924.)

Throughout the Act, save as otherwise expressly provided, for "Local Government" substitute "Central Government".

Sections 3 and 4.—Omit "with the previous sanction of the Governor General in Council" and "with the like sanction".

Sections 6 and 7.—For "Secretary of State in Council" substitute "Central Government".

Section 8.—For "Secretary of State in Council" substitute "Central Government".

Section 9.—Omit "with the previous sanction of the Governor General in Council".

Section 12.—For "by Government" substitute "by the Central Government".

Section 13.—In sub-section (6) for "Government" substitute "Crown".

Section 14.—In sub-section (1) omit "after consultation with the Local Government".

Section 17.—For "with the concurrence of" substitute "after consultation with".

Section 28.—For "Government service" substitute "the service of the Crown".

Section 33.—For "Secretary of State for India in Council" substitute "Central Government".

Section 34.—For "Secretary of State in Council" substitute "Crown".

Section 45.—In clause (*b*) of sub-section (1) for "Local Government" substitute "Provincial Government concerned".

Section 46.—Omit "or the Local Government".

Section 47.—For "Government" substitute "Crown".

Section 49.—Omit "after consultation with the Local Government".

Section 54.—Omit "with the previous sanction of the Governor General in Council".

Section 57.—For "Government" substitute "Central Government".

Section 60.—Omit the proviso to sub-section (1).

Section 65.—For "Secretary of State in Council" substitute "Crown".

Section 99.—In sub-section (2) in clause (*d*) for "Government" substitute "the Crown" and in clause (*f*) after "property of" insert "the Crown" and for "the Government" substitute "the Central or any Provincial Government".

Section 106.—Omit from "and (*c*) subject to any deductions" to the end of the section.

Section 108.—Omit "or the Local Government", and for "by His Majesty" substitute "by the Central or a Provincial Government".

Section 110.—For "proceed to acquire it" substitute "procure the acquisition thereof".

Section 124.—For "Government" substitute "the Crown".

Section 138.—For "of the Government" substitute "in the service of the Crown".

Section 172.—Omit "or the Local Government' and "as the case may be".

Section 173.—For "Local Government" substitute "Provincial Government".

Section 181.—In sub-section (4) for "from Government" substitute "from the Crown".

Section 195.—For "Government" substitute "the Crown".

Section 239.—In sub-section (5) for the words from "refer the case" to the end of the sub-section substitute "make such order thereon as it thinks fit".

Section 262.—For "Government" substitute "Crown".

Section 280.—For "Government" substitute "the Crown".

The Criminal Tribes Act, 1924.

(VI of 1924.)

Section 2.—Omit "and the town of Rangoon" and "or the town of Rangoon".

The Land Customs Act, 1924.

(XIX of 1924.)

Section 1.—Omit "(except Aden)."

Section 2.—In clause (*b*) for "to a Local Government, the Local Government or such officer of the Local Government may appoint in that behalf" substitute "and entrust to a Provincial Government or an officer of a Provincial Government under section 124 (1) of the Gomernment of India Act, 1935, that Government or officer as the case may be".

Omit clause (*h*).

Section 3.—Omit "to any Local Government or" and "the Local Government or".

Section 8.—For "Government" substitute "the Crown".

The Indian Soldiers (Litigation) Act, 1925.

(IV of 1925.)

Section 3.—For clause (*c*) substitute—

"(*c*) overseas—when he is or has been serving in any place outside India (other than Ceylon) the journey between which and British India is ordinarily undertaken wholly or in part by sea."

Section 13.—For "Local Government" substitute "Central Government" and after "High Court" insert "concerned".

Section 14.—For "The Governor General in Council" substitute "As respects the Provincial Public Services, the Provincial Government, and in other cases, the Central Government."

The Legislative Assembly (President's Salary) Act, 1925.

(VI of 1925.)

After section 2 insert—

"3. On the establishment of the Federation of India, this Act shall cease to have effect."

Act to cease to have effect on establishment of Federation.

The Cotton Ginning and Pressing Factories Act, 1925.

(XII of 1925.)

Section 1.—Omit "(except Burma)".

Section 5.—In sub-section (2) for "the Governor General in Council may direct" substitute "it thinks fit".

Section 6.—For "Local Government" substitute "Central Government."

Section 12.—For clause (*c*) substitute—

"(*c*) the standard weights and scales to be used in cotton ginning and cotton pressing factories in any part of British India and the inspection of the same".

Section 13.—Omit clause (*c*).

The Provident Funds Act, 1925.

(XIX of 1925.)

Section 2.—In clause (*d*) for "the Government" substitute "the Secretary of State, the Central Government, the Crown Representative or any Provincial Government", and at the end of the clause insert "and references in this Act to the Government shall be construed accordingly".

For clause (*f*) substitute—

'(*f*) "Railway administration" means—

(i) any company administering a railway or tramway in British India either under a special Act of Parliament or an Indian law, or under contract with the Crown, or

(ii) the manager of any railway or tramway administered by the Federal Railway Authority or by a Provincial Government,

and includes, in any case referred to in sub-clause (ii), the Federal Railway Authority or the Provincial Government, as the case may be.'

Section 8.—For "Local Government" and "Governor-General in Council" substitute "appropriate Government".

At the end of the section insert—

'(4) In this section "the appropriate Government" means—

(*a*) in relation to a cantonment authority, a port authority for a major port, and any institution which, or the objects of which, appear to the Central Government to fall within List I in the Seventh Schedule to the Government of India Act, 1935, the Central Government; and

(*b*) in other cases, the Provincial Government.

Explanation.—"The Provincial Government" in relation to an institution registered under the Societies Registration Act, 1860, means the Provincial Government of the Province in which the society is registered.'

The Coal Grading Board Act, 1925.

(XXXI of 1925.)

Section 3.—In sub-sections (1) and (3) after "Railway Board" insert "or, after the establishment of the Federal Railway Authority, to that Authority".

The Indian Succession Act, 1925.

(XXXIX of 1925.)

Sections 223 and 236.—For "Governor-General in Council" substitute "Provincial Government".

Section 264.—Omit "and the province of Burma".

Section 273.—At the end of the section insert—

"The proviso to this section shall apply in British India after the separation of Burma and Aden from India to probates and letters of administration granted in Burma and Aden before the date of the separation, or after that date in proceedings which were pending at that date."

Section 300.—Omit "and the province of Burma".

Section 370.—In clause (*c*) of sub-section (2) for "Governor-General in Council" substitute "Provincial Government".

Section 380.—At the end of the section insert—

"This section shall apply in British India after the separation of Burma and Aden from India to certificates granted in Burma and Aden before the date of the separation, or after that date in proceedings which were pending at that date."

The Indian Naturalization Act, 1926.

(VII of 1926.)

Throughout the Act, save as otherwise provided, for "a Local Government" or "the Local Government" or "such Local Government" substitute "the Central Government".

Section 3.—In clauses (*c*) and (*f*) of sub-section (1) for "under the Government" substitute "in India", and in clause (*e*) of that sub-section for "a principal vernacular of the province" substitute "one of the principal vernaculars of British India".

Section 8.—In sub-section (1) for the words down to "is satisfied that the certificate" substitute "Where the Central Government is satisfied that a certificate of naturalization granted under this Act or the Indian Naturalization Act, 1852" and omit sub-section (3).

Section 13.—Omit "with the previous sanction of the Governor-General in Council".

After section 14 insert—

"14A. The provisions of this Act shall, after the separation of Burma and Aden from India, continue to apply, as respects British India, to certificates granted under this Act, or the Indian Naturalization Act, 1852, before the said separation by the Local Governments of Burma and Aden and any such certificates may after the said separation be revoked as respects British India accordingly."

Application to certificates granted before separation of Burma and Aden.

The Indian Trade Unions Act, 1926.

(XVI of 1926.)

Throughout the Act, except as expressly provided, for "Local Government" substitute "appropriate Government".

Section 2.—After "In this Act" insert " 'the appropriate Government' means, in relation to Trade Unions whose objects are not confined to one province, the Central Government, and in relation to other Trade Unions, the Provincial Government, and".

Section 3.—For "Each Local Government" substitute "The appropriate Government" and for "the province" substitute "each Province."

Section 11.—Omit "or of Rangoon".

Section 15.—For "Governor-General in Council" substitute "appropriate Government".

Section 16.—After "the Government of India Act" insert "or the Government of India Act, 1935".

Section 29.—Omit "Subject to the control of the Governor-General in Council".

The Cotton Industry (Statistics) Act, 1926.

(XX of 1926.)

Throughout the Act for "Governor-General in Council" substitute "Provincial Government".

Section 5.—For "British India" substitute "the Province".

The Delhi Joint Water Board Act, 1926.

(XXIII of 1926.)

Sections 2, 3 (1) and 4.—"Chief Commissioner" shall stand unmodified.

Section 8.—For "Auditor-General" substitute "Central Government".

Section 10.—In sub-section (2) omit from "and if any question" to the end of the section.

Section 12.—In clause (*d*) of sub-section (3) omit "by the Auditor-General".

For section 15 substitute:—

"Dispute as to liability for payments to or by the Board.

15.—(1) If any dispute arises between the Board and any constituent body as to the liability of the constituent body to pay any sum demanded by the Board or as to the right of the constituent body to any refund, or as to the amount of any refund, from the Board, the constituent body may require the Board to refer the matter in dispute to the Central Government, and the decision of the Central Government thereon shall be final:

Provided that, where the dispute relates to the liability of a constituent body to make any payment to the Board, the payment shall be made to the Board pending the decision of the Central Government.

(2) In making any such reference the Board shall furnish to the Central Government and the constituent body concerned a full statement of the grounds of its claim, and the Central Government shall consider that statement, together with any like statement received from the constituent body within six weeks of the date of the reference."

Sections 18 and 19.—For "Auditor-General" substitute "Central Government".

Sections 22 and 27.—For "of the Government" substitute "of the Crown".

The Indian Bar Councils Act, 1926.

(XXXVIII of 1926.)

Section 1.—For "Patna and Rangoon" substitute "and Patna"; for "Governor-General in Council" substitute "Provincial Government."

Section 2.—At end insert—

"(2) In this Act "the Provincial Government" means, in relation to any High Court, the Provincial Government of the Province in which the High Court has its principal seat."

The Indian Forest Act, 1927.

(XVI of 1927.)

Section 2.—In paragraph (2) omit "the Governor-General in Council or".

Sections 5, 23 and 26.—For "on behalf of Government" and "on behalf of the Government" substitute "on behalf of the Crown".

Section 27.—Omit "subject to the control of the Governor-General in Council".

Section 39.—In sub-sections (1) and (2) for "local Government" substitute "Central Government"; in sub-section (1) for "the Government" substitute "the Crown" and omit the proviso; and after sub-section (3) insert—

"(4) Until provision to the contrary is made by the Central Legislature, any Provincial Government which was immediately before the commencement of Part III of the Government of India Act, 1935, levying a duty on any timber or other forest produce produced in that Province may continue to levy that duty on such timber or forest produce:

Provided that nothing in this sub-section authorises the levy of any duty which as between timber or other forest produce of the Province and similar produce of the locality outside the Province, discriminates in favour of the former, or which, in the case of timber or other forest produce of localities outside the Province, discriminates between timber or other forest produce of one locality and similar timber or other forest produce of another locality."

Section 41.—In sub-section (2) for "British India" substitute "the Province" and for "Government" substitute "the Crown".

After section 41 insert—

"Powers of Central Government as to movements of timber across Customs frontiers.

41A. Notwithstanding anything in section 41, the Central Government may make rules to prescribe the route by which alone timber or other forest produce may be imported, exported or moved into or from British India across any customs frontier as defined by the Central Government, and any rules made under section 41 shall have effect subject to the rules made under this section."

Sections 43, 44, 47, 49 and 79.—For "Government" substitute "Crown".

After section 85 insert—

"Saving for rights of Central Government.

85A. As from the commencement of Part III of the Government of India Act, 1935, nothing in this Act shall authorise any Provincial Government to make any order or do any other thing in relation to any Crown property not vested in His Majesty for the purposes of that Province or otherwise to prejudice any Crown rights, without the consent of the Government or authority concerned."

The Indian Lighthouse Act, 1927.

(XVII of 1927.)

Section 18.—Leave out "or the Government."

The Trade Disputes Act, 1929

(VII of 1929.)

Section 2.—In clause (*c*) for "the Government" substitute "any Government in British India".

After clause (*c*) insert—

"(*cc*) Federal Railway has the same meaning as in the Government of India Act, 1935."

In clause (*g*) for "the Governor-General in Council" substitute "in the case of a Federal Railway, the Central Government, and in the case of any other railway, the Provincial Government".

In clause (*k*) omit "or in the Royal Indian Marine Service".

Section 3.—For "or is a railway company" substitute "or is the Federal Railway Authority or a railway company operating a Federal Railway".

Section 15.—For sub-section (4) substitute—

"(4) No Court shall take cognisance of any offence under this section or of the abetment of any such offence save on complaint made by or under authority from the Central Government where the public utility service in question is a railway service connected with a Federal Railway or a postal, telegraph or telephone service and the Provincial Government in other cases."

Section 16.—For "the Government" substitute "any Government in British India, the Federal Railway Authority or the Crown Representative"

Section 17.—In sub-section (2) for "the Governor-General in Council or the Local Government" substitute "the appropriate Government" and insert at the end of that sub-section—

"In this sub-section 'the appropriate Government' means—

(*a*) in relation to industries, businesses and undertakings carried on by the Central Government or by the Federal Railway Authority or by a railway company operating a Federal Railway, the Central Government; and

(*b*) in other cases, the Provincial Government."

Section 19.—In sub-section (1) for "or by a railway company" substitute "or by the Federal Railway Authority or a railway company operating a Federal Railway".

In sub-section (3) omit "or the Local Official Gazette as the case may be".

The Indian Soft Coke Cess Act, 1929

(VIII of 1929.)

Section 1.—In sub-section (2) omit "except Aden"

Section 4.—In clause (i) of sub-section (1), after "Board" insert "or, after the establishment of the Federal Railway Authority, to that Authority"; and for clauses (ii) and (iii) substitute—

"(ii) one person nominated by the Central Government to represent Bengal;

(iii) one person nominated by the Central Government to represent the provinces of Bihar and Orissa."

In sub-section (2) after "Board" insert "or after the establishment of the Federal Railway Authority to that Authority".

Section 9.—After "His Majesty" insert "for the purposes of the Central Government".

The Dangerous Drugs Act, 1930.

(II of 1930.)

Section 2.—For clauses (*i*) to (*l*) substitute—

"(*i*) 'to import into British India' means to bring into British India by land, sea or air across any of the customs frontiers defined by the Central Government;

(*j*) 'to import inter-Provincially' means to bring into a Province otherwise than across any of the said customs frontiers;

(*k*) 'to export from British India' means to take out of British India by land, sea or air across any of the said customs frontiers;

(*l*) 'to export inter-Provincially' means to take out of a Province otherwise than across any of the said customs frontiers;

(*ll*) 'British India' includes Berar; and

Omit clause (*n*) and the word "and" immediately preceding it.

Section 4.—In sub-section (1) for "Government" substitute "the Crown".

Section 8.—Omit "subject to the control of the Governor-General in Council".

Section 10.—For "Government" substitute "the Crown".

Section 31.—For "Local Government" substitute "appropriate Government" and at the end of the section insert—

"In this section 'the appropriate Government' means as respects any contravention of any rules which under this Act fall to be made by the Provincial Government, that Government, and in other cases, the Central Government."

Section 35.—For "the Governor-General in Council" substitute "In connection with offences against rules which under this Act fall to be made by the Provincial Government, the Provincial Government, and in connection with other offences, the Central Government".

Section 36.—Substitute for sub-sections (2) and (3)—

"(2) Rules made under this Act shall be published in the Official Gazette."

Section 39.—For "local Legislature" substitute "local or Provincial Legislature".

Schedule II.—Omit all the entries under the heading "Burma Acts".

The Inland Steam-Vessels (Amendment) Act, 1930.

(XIII of 1930.)

Section 1.—For "Governor-General in Council" substitute "Provincial Government".

The Silver (Excise Duty) Act, 1930.

(XVIII of 1930.)

Section 4.—For "Local Government" substitute "Central Government".

The Indian Companies (Amendment) Act, 1930.

(XIX of 1930.)

Section 3.—In sub-section (2) for "Governor-General in Council" substitute "appropriate Government" and at the end of the sub-section insert—

"In this section 'the appropriate Government' means, in relation to companies falling within Item 33 of List I in the Seventh Schedule to the Government of India Act, 1935, the Central Government, and in relation to other companies, the Provincial Government."

The Indian Lac Cess Act, 1930.

(XXIV of 1930.)

In the long title and preamble after "Indian" insert "or Burman".

Section 1.—Omit "except Aden"

Section 3.—Omit "or to Aden".

Section 4.—For clause (v) of sub-section (4) substitute—

"(v) six members representing the cultivators of lac to be nominated by the Central Government, one for Bengal, one for the United Provinces, one for the Central Provinces and Berar, one for Assam and two for Bihar."

In clauses (*ii*) and (*v*) of sub-section (5) omit "and Orissa".

Section 6.—After "Indian" insert "or Burman".

Section 7.—After "His Majesty" insert "for the purposes of the Central Government".

Section 8.—For "Government servants" substitute "servants of the Crown".

The Vizagapatam Port Act, 1931.

(X of 1931.)

This Act shall cease to have effect.

The Salt (Additional Import Duty) Act, 1931.

(XIV of 1931.)

Section 3.—Omit "except Aden and Perim".

Section 5.—For "Secretary of State for India in Council" substitute "Central Government"

The Provisional Collection of Taxes Act, 1931.

(XVI of 1931.)

Sections 3 and 4.—For "Indian Legislature" substitute "Central Legislature".

The Bengal Criminal Law Amendment (Supplementary) Act, 1932.

(VIII of 1932.)

Section 2.—Omit "made with the previous sanction of the Governor-General in Council" and after "Provided that" insert—

"(*a*) no such order as aforesaid shall be made except with the previous consent of the Provincial Government of the Province in which the jail is situated; and

(*b*)"

The Indian Partnership Act, 1932.

(IX of 1932.)

Section 56.—For "Governor-General in Council" substitute "Provincial Government of any province" and for "any province" substitute "that province".

Section 58.—In sub-section (3) for "the Government of India or a Local Government" substitute "the Central Government,. or any Provincial Government or the Crown Representative"; for "when the Governor-General in Council" substitute "when the Provincial Government," and omit "under the hand of one of the Secretaries to the Government of India".

Section 71.—For "Governor-General in Council" substitute "Provincial Government" and in sub-section (2) after "may" insert "also".

The Foreign Relations Act, 1932.

(XII of 1932.)

Section 2.—Omit the explanation.

The Indian Air Force Act, 1932.

(XIV of 1932.)

Section 6.—In sub-section (15) for "Governor-General in Council" substitute "Central Government or the Crown Representative".

Sections 44, 50 and 51.—For "Government" substitute "the Crown".

Section 58.—For "the Governor-General in Council" substitute "the Central Government or the Crown Representative", and for "the Indian (Foreign Jurisdiction) Order in Council, 1902" substitute "the Government of India Act, 1935, or of any Order in Council made under the Foreign Jurisdiction Act, 1890".

Section 62.—For "the Government" substitute "the Crown".

Section 90.—In sub-section (3) for "the territories of any prince or chief in India" substitute "any Indian State or tribal area" and for "the British Indian Government" substitute "the Central Government or the Crown Representative".

Section 94.—For "the civil, military or air force service of the Government" substitute "the service of the Crown".

Section 97.—For "the civil, military or air force service of Government" substitute "the service of the Crown".

Section 127.—For "Secretary of State for India in Council" substitute "Crown".

The Port Haj Committees Act, 1932.

(XX of 1932.)

Section 4.—For "Local Government" substitute "Central Government", for "the Bengal Legislative Council" substitute "the Chambers of the Bengal Legislature", for "the Council of State and of the Legislative Assembly" substitute "the Chambers of the Central Legislature", for "by constituencies in the Presidency of" substitute "for, or for any part of," and for "the Bombay Legislative Council" substitute "the Chambers of the Bombay Legislature".

For clause (*c*) of sub-section (3) substitute—

"(*c*) five members to be elected by an electorate consisting of—

(i) the elected Muslim members of the Sind Legislature, and

(ii) the Muslim members of the Chambers of the Central Legislature elected for, or for any part of, Sind."

In sub-section (5) for "a Local Government" substitute "the Central Government".

For section 5 substitute—

"Power to alter composition of Port Haj Committee.

5. The Central Government may, after previous publication, make rules altering the composition of a Port Haj Committee."

Sections 7 to 17.—For "Local Government" substitute "Central Government".

Section 18.—For "Government" and "the Local Government" substitute "the Central Government".

Section 20.—For "lapsed to Government" substitute "lapsed to the Crown" and for "allotted by Government" substitute "allotted by the Central or any Provincial Government".

Section 22.—For "The Local Government may, subject to the control of the Governor-General in Council" substitute "The Central Government may".

Section 23.—For "Local Government" substitute "Central Government".

The Tea Districts Emigrant Labour Act, 1932.

(XXII of 1932.)

Section 16.—For sub-section (1) substitute—

"(1) The Central Government may, by notification in the Official Gazette, declare any area within a recruiting Province to be a controlled emigration area and thereupon the provisions of this Chapter shall apply to that area:

Provided that the Central Government may by the same or any subsequent notification declare that any of the provisions of this Chapter shall not apply in that area, or shall apply subject to such general or special relaxations as may be specified."

Sections 17 and 21.—For "Local Government" substitute "Central Government".

Section 23.—For "he may require the Local Government to" substitute "the Central Government may" and for "make any requisition for the cancellation of" substitute "direct the cancellation of any".

Section 24.—For "Local Government" substitute "Central Government".

Section 26.—For sub-section (1) substitute—

"(1) The Central Government may, by notification in the Official Gazette, declare any controlled emigration area or any part of a controlled emigration area within a recruiting Province to be a restricted recruiting area and thereupon the provisions of this Chapter shall apply to that area:

Provided that the Central Government may, by the same or any subsequent notification, declare that any of the provisions of this Chapter shall not apply in relation to that area, or shall apply subject to such general or special relaxations as may be specified."

Section 27.—For "The Local Government having jurisdiction over any restricted recruiting area" substitute "The Central Government" and after "rules" insert "as respects any restricted recruiting area".

Section 28.—In the proviso to sub-section (1) for "the Local Government having jurisdiction over any restricted recruiting area" substitute "the Central Government" and after "rules" insert "as respects any restricted recruiting area".

In sub-section (2) for "Local Government of Assam" substitute "Central Government" and after "rules" insert "for Assam".

Section 36.—In sub-section (3) for the words down to "invest a Subdivisional Magistrate" substitute "The Central Government may invest a District Magistrate or a Subdivisional Magistrate in any recruiting Province and a Subdivisional Magistrate in Assam".

In subsection (4) for "Local Government" substitute "Central Government".

Section 37.—In sub-section (2) for "Local Government of Assam" substitute "Central Government" and after "rules" insert "for Assam".

In sub-section (3) for the words down to "the Local Government" substitute "Rules made under this section".

Section 38. For "Subject to the control of the Governor-General in Council, the Local Government of Assam" substitute "The Central Government"

The Bengal Suppression of Terrorist Outrages (Supplementary) Act, 1932.

(XXIV of 1932.)

Section 5.—Omit the proviso.

The Provincial Criminal Law Supplementing Act, 1933.

(IX of 1933.)

Omit section 6.

The Indian Wireless Telegraphy Act, 1933.

(XVII of 1933.)

Section 7.—For "Local Government" substitute "Central Government".

Section 9 shall cease to have effect.

The Murshidabad Estate Administration Act, 1933.

(XXIII of 1933.)

The Preamble.—After the first recital insert—

"And whereas by virtue of section 177 of the Government of India Act, 1935, the said indenture is, as from the commencement of Part III of that Act, to have effect as if it had been made on behalf of the Province of Bengal and references therein to the Secretary of State in Council are to be construed accordingly."

In the second recital for "these" substitute "the said" and for "Secretary of State" substitute "Provincial Government of Bengal".

Section 2.—Omit clause (5).

Section 3.—For "The Local Government", where it first occurs, substitute "The Provincial Government of Bengal (hereafter in this Act referred to as 'the Provincial Government')", and for "the Secretary of State" substitute "the Provincial Government".

Section 4. After "or the Secretary of State" insert "or the Province of Bengal", and for "of the Secretary of State" substitute "of the Provincial Government".

Section 5.—After the first "the Secretary of State" insert "or the Province of Bengal"; for the second, third and fourth "the Secretary of State" substitute "the Province of Bengal".

Section 7.—For "the Secretary of State" substitute "Provincial Government".

Section 10.—For "Government" substitute "the Crown".

Sections 19, 26 and 27.—For "Secretary of State" substitute "Provincial Government".

The Indian Tea Control Act, 1933.

(XXIV of 1933.)

Section 2.—For clause (*a*) substitute—

"(*a*) 'Committee' means the Indian Tea Licensing Committee constituted under this Act;"

In clause (*b*) for "outside India" substitute "outside India and Burma."

Section 3.—For "Local Government of Assam" and "Local Government of Madras" substitute "Central Government".

For section 9 substitute—

"9.—(1) The Central Government may, by notification in the Official Gazette, declare the Committee to be dissolved, and on the date of the publication of such notification the Committee shall stand dissolved and this Act shall be deemed to be repealed. Dissolution of Committee.

(2) When the Committee is dissolved, either under this section or by the expiry of this Act, the unexpended balance of fees received by the Committee under this Act shall lapse to the Central Government."

Section 10.—For "Government" substitute "the Central Government".

Chapter IA shall cease to have effect.

Section 11.—For "outside India" substitute "outside India and Burma".

Section 12.—In sub-section (1) omit "in the case of exports from British India excluding Burma, or the Authority in the case of exports from Burma"; and in sub-section (2) omit "or the Authority, as the case may be".

Section 13.—Omit sub-section (3).

Section 14.—In sub-section (1) omit "for estates in British India excluding Burma" and "and for estates in Burma by the Authority".

For sub-section (2) substitute—

"(2) The total of all export quotas for any financial year shall not exceed the Indian Overseas Export Allotment for that year."

Section 15.—In sub-section (2) omit "or, if the estate is in Burma, of the Authority"; and omit the proviso.

Section 16.—In sub-section (1) omit "or, if such estate is in Burma, to the Authority"; in sub-section (2) omit "or Authority, as the case may be"; and in the proviso to sub-section (3) omit "or the Authority".

Section 17.—In sub-section (1) omit "or, in Burma, to the Authority" and "or Authority, as the case may be".

Section 18.—In sub-section (1) omit "and the Authority", "each" and "or the Authority".

Section 19.—In sub-section (2) omit "or, in the case of tea shipped or waterborne to be shipped for export from Burma, by the Authority"; and in sub-section (3) omit "or, in the case of tea produced in Burma, by the Authority".

Section 20.—In sub-section (1) omit "or in Burma, the Authority"; and in sub-section (2) omit "or the Authority, as the case may be".

Section 21.—In sub-section (1) omit "or the Authority"; and in sub-section (2) omit "and the Authority", and for "them" substitute "it".

Section 26.—For "Governor-General in Council" substitute "Committee".

The reference to the Gazette of India shall stand unmodified.

Section 29.—In sub-section (1) omit "or, in Burma, the Authority"; and in sub-section (2) omit "or, in Burma, any person authorised by the Authority in this behalf".

Section 32.—Omit "or any person authorised by the Authority" and "or by a person authorised by the Authority"; and for "such member, officer or person" substitute "such member or officer".

Section 35.—In sub-section (1) omit "or, in Burma, by the Authority", and for "the Local Government" substitute "the Central Government, in the case of the offence of furnishing a false return under sub-section (1) of section 20 or the Provincial Government in any other case"; and in sub-section (2) omit "or, in Burma, the Authority".

The Indian Medical Council Act, 1933.

(XXVII of 1933.)

Section 2.—For clause (*a*) substitute—

"(*a*) 'British Indian University' means any university in British India established by an Indian law and having a medical faculty".

In clauses (*e*) and (*f*) for "a Local Legislature" substitute "a Local or Provincial Legislature".

Section 3.—In sub-section (1) for "the Local Government of the Province" substitute "the Central Government"; omit "and in the case of the University of Rangoon, the Council", and "or, in the case of the University of Rangoon, the members of the Board of Studies in Medicine"; and for "three members" substitute "four members".

Section 4.—For "Local Government" substitute "Central Government" and omit "subject to any instructions the Governor-General in Council may issue in this behalf."

Section 11.—Omit "Rangoon."

The Khaddar (Name Protection) Act, 1934.

(VIII of 1934.)

For "Local Government" substitute "Central Government."

The Indian States (Protection) Act, 1934.

(XI of 1934.)

Section 3.—Omit the words from "and any power which might" to the end of the section.

Section 7.—For "the Governor General in Council or the Local Government" substitute "the Central Government, if the offence is committed outside British India, and the Provincial Government in other cases."

The Sugar (Excise Duty) Act, 1934.

(XIV of 1934.)

Section 5.—For "Local Government" substitute "Central Government."

Section 11.—For "officers of Government" substitute "officers of the Crown" and omit sub-section (4).

The Sugar-Cane Act, 1934.

(XV of 1934.)

Section 3.—Omit "Subject to the control of the Governor General in Council."

Section 8.—For "Governor General in Council" substitute "Provincial Government."

The Matches (Excise Duty) Act, 1934.

(XVI of 1934.)

Section 6.—For "Local Government" substitute "Central Government."

Section 18.—Omit sub-section (4).

Omit section 21.

The Indian Dock Labourers Act, 1934.

(XIX of 1934.)

Throughout the Act for "Local Government" substitute "Central Government."

Section 6.—Omit "Subject to the control of the Governor General in Council."

Section 7.—For "the Gazette of India and the Local Official Gazette, respectively" substitute "the Official Gazette."

The Mechanical Lighters (Excise Duty) Act, 1934.

(XXIII of 1934.)

Section 5.—For "Local Government" substitute "Central Government."

Section 15.—Omit sub-section (4).

The Factories Act, 1934.

(XXV of 1934.)

Section 3.—In clause (*a*) omit "excluding Burma," and omit clause (*b*).

Section 8.—For "Governor General in Council" substitute "Provincial Government."

Section 11.—For "in the employment of Government" substitute "in the service of the Crown."

Sections 33 and 77.—For "Governor General in Council" substitute "Provincial Government."

Omit section 78.

Section 79.—Omit "the Gazette of India or" and "as the case may be."

The Indian Rubber Control Act, 1934.

(XXVIII of 1934.)

Throughout the Act for "Rubber Licensing Resolutions" substitute "Rubber Licensing Resolution."

Section 2.—For clause (*a*) substitute—

"(*a*) 'Committee' means the Indian Rubber Licensing Committee constituted under this Act."

In clause (*b*) for "outside India" substitute "outside India and Burma"; in clause (*i*) for "Governor General in Council" substitute "Committee" and in clause (*j*) for "the Resolutions" substitute "the Resolution" and for "Notifications Nos. 39 and 40" substitute "Notification No. 39."

Section 3.—For sub-section (1) substitute—

"(1) The Central Government shall constitute a Committee to be called the Indian Rubber Licensing Committee."

In sub-section (2).—For clause (*b*) substitute—

"(*b*) one member to be nominated by the Central Government to represent the Province of Madras."

Omit sub-section (3); in sub-section (4) omit "or the Burma Rubber Licensing Committee"; for "the said Resolutions" substitute "the said Resolution"; omit "or sub-section (3)" and in sub-section (5) for "each Committee" substitute "the Committee."

Section 5.—For "Committees" substitute "Committee."

Section 8.—For "Each Committee" substitute "The Committee."

Section 9.—In sub-section (1) for "one or both of the Committees" substitute "the Committee"; omit "or Committees, as the case may be" and omit "if both Committees are dissolved."

In sub-section (2) for "either" substitute "the" and for "Government" substitute "the Central Government."

Section 12.—In sub-section (1) for "in India" substitute "in India or Burma", and omit from "in the case of exports from British India" to the end of the sub-section; in sub-section (2) for "than India" substitute "than India and Burma", and omit from "in the case of re-exports from British India" to the end of the section.

Section 13.—Omit "excluding Burma" and the words from "and a Burma export" to "similarly expressed."

Section 14.—Omit "or by the Burma Rubber Licensing Committee" and "or the Burma export allotment, as the case may be."

Section 15.—Omit "excluding Burma", "or if, in any year, the net exports of rubber from Burma exceed the Burma export allotment for that year", "or if, in any year, the net exports of rubber from Burma are less than the Burma export allotment for that year", and "in respect of British India excluding Burma and in respect of Burma respectively."

Section 18.—After "export" insert "from British India"; after "British India" insert "or British Burma" and after "outside India" insert "and Burma."

Section 19.—In sub-section (2) after "India" insert "and Burma."

Section 23.—For Committees" substitute "Committee."

Section 24.—In clause (*b*) after "export" insert "from British India", and after "British India" insert "or British Burma from a place outside India and Burma."

Section 27.—Omit sub-section (2); in sub-section (3) omit "other than Burma", and for "Governor General in Council" substitute "Committee"; and the reference to the Gazette of India shall stand unmodified.

Section 32.—After "outside India" insert "and Burma."

Section 34.—Omit "excluding Burma and in Burma."

Section 44.—For "Local Government" substitute "Central Government in the case of offences under sections 38 and 41, and in the case of offences under section 39 arising from false returns under sub-section (1) of section 21 or sub-section (1) of section 34, and of the Provincial Government in other cases."

The Petroleum Act, 1934.

(XXX of 1934.)

Section 5.—Omit sub-section (3).

Section 25.—For "Local Government" substitute "Central Government."

Section 28.—In sub-section (3) omit "or in Rangoon" and in sub-section (4) for "Local Government" substitute "Central Government and the Provincial Government."

Section 29.—In sub-section (3) omit "and in the local official Gazette."

The Indian Tariff Act, 1934.

(XXXII of 1934.)

Section 1.—Omit "except the Chief Commissionership of Aden."

Section 6.—Omit "or the Local Government."

The First Schedule.—In Item 25 (2) for "Government of Bengal" substitute "Central Government."

The Indian Coffee Cess Act, 1935.

(XIV of 1935.)

Section 1.—Omit "except Burma."

Section 3.—Omit "or to Burma."

Section 4.—In sub-section (1), in clause (i) for "nominated respectively by those Governments" substitute "nominated" in the case of the States' Representatives, by the Government of the State concerned, and in the other cases, by the Central Government", and in clause (ii) for "the Local Governments of" substitute "the Central Government to represent."

The Payment of Wages Act, 1936.

(IV of 1936.)

Section 2.—In paragraph (vi) (*a*) leave out "Governor-General in Council or."

Section 5.—For "Governor-General in Council" substitute "Provincial Government."

Section 7.—In sub-section (2) (*e*) omit "Governor-General in Council or."

Section 11.—Omit "the Governor-General in Council or."

Section 14.—For "Governor-General in Council" substitute "Provincial Government."

Section 17.—Omit "or in Rangoon."

For section 24 substitute—

"24. The powers by this Act conferred upon the Provincial Government shall, in relation to Federal railways (within the meaning of the Government of India Act, 1935), mines and oil-fields, be powers of the Central Government."

Application of Act to Federal Railways, mines and oilfields.

Section 26.—In sub-section (1) for "Governor-General in Council" substitute "Provincial Government" and in sub-section (2) omit "subject to the control of the Governor-General in Council."

The Cochin Port Act, 1936.

(VI of 1936.)

This Act shall cease to have effect.

The Geneva Convention Implementing Act, 1936.

(XIV of 1936.)

Section 5.—Omit "or the Local Government."

THE CODES.

The Indian Penal Code.

(XLV of 1860.)

Section 1.—For the words from "the whole of the territories" to the end of the section substitute "British India."

Section 2.—For "the said territories" substitute "British India."

Section 3.—For "law passed by the Governor-General in Council" substitute "Indian law"; and for "the limits of the said territories" and "the said territories" substitute "British India."

Section 5.—For "the said territories" substitute "British India."

Section 14.—For the words from "the said Statute" to the end of the section substitute "the Government of India Act, 1935 or by or under the authority of any Government in British India or of the Crown Representative."

Omit sections 15, 16 and 18.

In section 21: in clause second for "the Government of India or any Government" substitute "any Government in British India or the Crown Representative"; and in clauses eighth and ninth for "Government" substitute "the Crown."

Section 54.—For "the Government of India or the Government of the place" substitute "the Central Government or the Provincial Government of the Province."

Section 55.—For "the Government of India or the Government of the place" substitute "the Provincial Government of the Province."

After section 55 insert:—

"Saving for Royal prerogative.

55A. Nothing in section fifty-four or section fifty-five shall derogate from the right of His Majesty, or of the Governor-General if any such right is delegated to him by His Majesty, to grant pardons, reprieves, respites or remissions of punishment."

Section 75.—In clause (*b*) for the words from "in the territories" to "Local Government" substitute "in any Indian State acting under the general or special authority of the Central Government or of the Crown Representative."

Section 121A.—After the second "British India" insert "of British Burma" and for "the Government of India or any Local Government" substitute "the Central Government or any Provincial Government or the Government of Burma."

Section 124.—For "Presidency", where it first occurs, substitute "Province" and omit "or a Lieutenant-Governor", "Lieutenant-Governor" and "or of the Council of any Presidency."

Section 124A.—After "Her Majesty" insert "or the Crown Representative" and after "British India" insert "or British Burma."

Section 141.—For "the Legislative or Executive Government of India or the Government of any Presidency or any Lieutenant-Governor" substitute "the Central or any Provincial Government or Legislature."

Sections 161, 162 and 163.—For "with the Legislative or Executive Government of India or the Government of any Presidency or with any Lieutenant-Governor" substitute "with the Central or any Provincial Government or Legislature."

Section 271.—For "by the Government of India or by any Government" substitute "by the Central or any Provincial Government or the Crown Representative."

Section 294A.—For "not authorised by Government" substitute "not being a State lottery or a lottery authorised by the Provincial Government."

The Code of Criminal Procedure, 1898.

(V of 1898.)

Section 4.—In clause (*j*) of sub-section (1) omit "Rangoon"; and for "Governor General in Council" substitute "Provincial Government."

Section 25.—Omit from "the Governor General" (where those words first occur) to "the Governor General and."

Omit sections 26 and 27.

Section 30.—Leave out "and Burma."

Section 45.—In sub-section (1) for "Government" substitute "the Crown", and in clause (ii) of sub-section (2) for "the Governor General in Council" substitute "the Central Government or the Crown Representative."

Section 72.—For "Government" substitute "Crown"

Sections 88 and 89.—For "Government" substitute "the Provincial Government."

Section 108.—Omit "the Governor General in Council or", and for "by the Governor General in Council" substitute "by the Provincial Government."

Section 178.—After "Act, 1915" insert "or section 224 of the Government of India Act, 1935."

Section 194.—After "Act, 1915" insert "or the Government of India Act, 1935"; omit "the Governor General in Council or" and for "shall belong to the Government of India" substitute "shall form part of the revenues of the Province."

Sections 196 and 196A.—For "the Governor General in Council, the Local Government or some officer empowered by the Governor-General in Council" substitute "the Provincial Government or some officer empowered by the Provincial Government."

Section 197.—In sub-section (1) for "previous sanction of the Local Government" substitute "previous sanction—

(*a*) in the case of a person employed in connection with the affairs of the Federation, of the Governor General exercising his individual judgment; and

(*b*) in the case of a person employed in connection with the affairs of a Province, of the Governor of that Province exercising his individual judgment"

In sub-section (2) for "Such Government" substitute "The Governor General or Governor, as the case may be, exercising his individual judgment."

After sub-section (2) insert—

"(3) In relation to the period elapsing between the commencement of Part III of the Government of India Act, 1935, and the establishment of the Federation, the references in this section to the Federation and to the Governor General exercising his individual judgment shall be construed as references to the Governor General in Council."

Section 266.—For the words from "means" to "Gazette of India" substitute "means a High Court within the meaning of the Government of India Act, 1935, and includes such other courts as the Provincial Government may by notification in the Official Gazette."

Section 267.—After "Act, 1915" insert "or the Government of India Act, 1935."

Section 313.—For sub-section (4) substitute—

"(4) The Provincial Government may exempt any salaried servant of the Crown from serving as a juror."

Section 320.—For clause (*aa*) substitute—

"(*aa*) members of any Legislature in British India;"

Section 329.—For "Government" substitute "Crown."

Section 335.—In sub-section (1) for the words from "Governor General" to "other High Courts" substitute "Provincial Government", and in sub-section (2) omit "in the case of the High Court at Fort William with the consent of the Governor-General in Council and in all other cases."

Section 401.—In sub-sections (1), (2) and (3) omit "the Governor-General in Council or"; in sub-sections (2) and (3) omit "as the case may be", and in sub-section (6) omit "Governor-General in Council and the."

Section 402.—Omit "Governor-General in Council or the."

After section 402 insert—

"Sentences of death.

402A. The powers conferred by sections 401 and 402 upon the Provincial Government may, in the case of sentences of death, also be exercised by the Governor-General in his discretion."

Omit section 448.

Section 491.—In clause (*d*) of sub-section (1) omit from "acting under" to "Governor-General in Council."

Section 492.—Omit "Governor-General in Council or the."

Section 503.—In sub-section (2) for "the territories of any Prince or Chief in India" substitute "any Indian State or tribal area" and for "British Indian Government" substitute "the Central Government or the Crown Representative"

Section 524.—For "Government" substitute "Provincial Government."

Section 527.—For "Governor General in Council" substitute "Provincial Government", and at the end of sub-section (1), insert—

"Provided that no case or appeal shall be transferred to a High Court or other Court in another Province without the consent of the Provincial Government of that Province."

Section 528D.—For "the Governor-General in Council or the Indian Legislature" substitute "the Central Legislature."

Section 554.—In sub-section (1) for the words from the beginning to "any other High Court" substitute "With the previous sanction of the Provincial Government, any High Court."

Section 555.—For "section 107 of the Government of India Act, 1915," substitute "section 224 of the Government of India Act, 1935."

Section 558.—For "the High Courts established by Royal Charter" substitute "the courts which are High Courts for the purposes of the Government of India Act, 1935."

Section 565.—For "the territories of any Prince or State in India acting under the general or special authority of the Governor-General in Council or of any Local Government" substitute "any Indian State acting under the general or special authority of the Central Government or of the Crown Representative."

The Code of Civil Procedure, 1908.

(V of 1908.)

Section 2.—In paragraph (5) for "the Governor-General in Council" substitute "the Central Government or the Crown Representative"; and in clauses (*c*), (*f*), (*g*) and (*h*) of paragraph (17) for "the Government" substitute "the Crown."

Section 10.—For "the Governor-General in Council" substitute "the Central Government or the Crown Representative."

Section 25.—In subsection (1) for "Governor-General in Council" substitute "Provincial Government," and at the end of the subsection insert—

"Provided that no suit, appeal or proceeding shall be transferred to a High Court without the consent of the Provincial Government of the Province in which that High Court has its principal seat."

Section 29.—For the proviso substitute "Provided that the Courts issuing such summonses have been established or continued by the authority of the Central Government or of the Crown Representative, or that the Provincial Government by whose Courts a summons is to be served has by notification in the Official Gazette declared the provisions of this section to apply to Courts of the Province."

Section 43.—For "the Governor-General in Council" substitute "the Central Government or the Crown Representative."

For section 44 substitute:—

"44 The Provincial Government may by notification in the Official Gazette declare that the decrees of any Civil or Revenue Courts in any Indian State, not being Courts established or continued by the authority of the Central Government or of the Crown Representative, or any class of such decrees, may be executed in the Province as if they had been passed by Courts of British India." Execution of decrees passed by Courts of Native States.

For section 45 substitute:—

"45. So much of the foregoing sections of this Part as empowers a Court to send a decree for execution to another Court shall be construed as empowering a Court in any Province to send a decree for execution to any Court established or continued by the authority of the Central Government or of the Crown Execution of decrees in foreign territory.

Representative in the territories of any foreign Prince or State to which the Provincial Government has by notification in the Official Gazette declared this section to apply."

Section 54.—For "the Government" substitute "the Crown".

Section 60.—In clause (*g*) of the proviso to subsection (1) for "pensioners of the Government" substitute "pensioners of the Crown" and for "the Governor-General in Council" substitute "the Central Government or the Provincial Government", in clause (*j*) of the said proviso for "Indian Articles of War" substitute "Indian Army Act, 1911, or the Burma Army Act" and in clause (*o*) of the said proviso for "any law passed under the Indian Councils Acts, 1861 and 1892" substitute "any Indian law".

Section 73.—In subsection (3) for "the Government" substitute "the Crown".

Section 78.—In clause (*a*) for "the Governor-General in Council" substitute "the Central Government or of the Crown Representative."

In the heading above section 79 for "the Government" substitute "the Crown."

For section 79 substitute:—

"Suits by or against Government

79. Subject to the provisions of sections 179 and 185 of the Government of India Act, 1935, in a suit by or against the Crown the authority to be named as plaintiff or defendant, as the case may be, shall be—

(*a*) in the case of a suit by or against the Central Government, the Governor-General in Council before the establishment of the Federation of India, and thereafter, the Federation;

(*b*) in the case of a suit by or against a Provincial Government, the Province; and

(*c*) in the case of a suit by or against the Crown Representative, the Secretary of State."

Section 80.—For "the Secretary of State for India in Council" substitute "the Crown", and for the words from "in the case of the Secretary of State" to "Collector of the District" substitute "delivered to, or left at the office of—

(*a*) in the case of a suit against the Central Government, a Secretary to that Government;

(*b*) in the case of a suit against the Crown Representative, the Political Secretary;

(*c*) in the case of a suit against a Provincial Government, a Secretary to that Government or the Collector of the District, and

(*d*) in the case of a suit against the Secretary of State, a Secretary to the Central Government, the Political Secretary and a Secretary to the Provincial Government of the Province where the suit is instituted."

Section 82.—For "the Secretary of State for India in Council" substitute "the Crown".

In the heading above section 83 for "Foreign and Native Rulers" substitute "Foreign Rulers and Rulers of Indian States".

Section 85.—After subsection (1) insert—

"*Explanation.*—For the purposes of this subsection the expression "the Government" means—

(*a*) in the case of any Indian State, the Crown Representative; and

(*b*) in any other case, the Central Government".

Section 86.—In subsection (1) for the words from 'with the consent" to "Government of India" substitute "in the case of the Ruling Chief of an Indian State with the consent of the Crown Representative, certified by the signature of the political secretary, and in any other case with the consent of the Central Government, certified by the signature of a secretary to that Government".

In subsection (2) for "the Government" substitute "the consenting authority."

In subsection (3) for "the consent of the Governor-General in Council" substitute "such consent as is mentioned in subsection (1)".

For subsection (4) substitute—

"(4) the Central Government or the Crown Representative, as the case may be, may by notification in the Gazette of India authorise a Provincial Government and any Secretary to that Government to excise with respect to any Prince, Chief, ambassador or envoy named in the notification the functions assigned by the foregoing subsections to the consenting authority and a certifying officer respectively."

Section 87.—For "the Governor-General in Council or the Local Government" substitute "the Central Government, the Crown Representative or the Provincial Government."

Section 111.—For "established under the Indian High Courts Act, 1861, or the Government of India Act, 1915" substitute "constituted by His Majesty by Letters Patent".

After section 111 insert—

"111A.—Where a certificate has been given under section 205 (1) of the Government of India Act, 1935, the three last preceding sections shall apply in relation to appeals to the Federal Court as they apply in relation to appeals to His Majesty in Council, and

Appeals to Federal Court

accordingly references to His Majesty shall be construed as references to the Federal Court:

Provided that—

(a) so much of the said sections as delimits the cases in which an appeal will lie shall be construed as delimiting the cases in which an appeal will lie without the leave of the Federal Court otherwise than on the ground that a substantial question of law as to the interpretation of the said Act, or any Order in Council made thereunder, has been wrongly decided;

(b) in determining under clause (c) of section 109 whether the case is a fit one for appeal, and, under section 110, whether the appeal involves a substantial question of law, any question of law as to the interpretation of the said Act, or any Order in Council made thereunder, shall be left out of account."

Sections 116 and 122.—For "established under the Indian High Courts Act, 1861, or the Government of India Act, 1915" substitute "constituted by His Majesty by Letters Patent."

Section 123.—For "by the Governor-General in Council or by the Local Government, as the case may be," substitute "by the Provincial Government."

Section 125.—For "in the case of the Court of the Judicial Commissioner of Coorg, the Governor-General in Council and in other cases the Local Government" substitute "the Provincial Government."

For section 126 substitute—

"Rules to be subject to approval.

126. Rules made under the foregoing provisions shall be subject to the previous approval of the Government of the Province in which the Court whose procedure the rules regulate is situate or, if that Court is not situate in any Province, to the previous approval of the Governor-General."

Section 129.—For "established under the Indian High Courts Act, 1861, or the Government of India Act, 1915" substitute "constituted by His Majesty by Letters Patent."

For section 130 substitute—

"Powers of other High Courts to make rules as to matters other than procedure.

130. A High Court not constituted by His Majesty by Letters Patent may, with the previous approval of the Provincial Government, make with respect to any matter other than procedure any rule which a High Court so constituted might under section 224 of the Government of India Act, 1935, make with respect to any such matter for any part of the territories under its jurisdiction which is not included within the limits of a Presidency-town."

Section 135A.—For clause (a) substitute—

"(a) if he is a member of a unicameral Legislature or of either Chamber of a bicameral Legislature constituted under the Government of India Act, 1935, during the continuance of any meeting of such Legislature or Chamber."

In clause (*b*) for "Chamber or Council" substitute "Legislature or Chamber."

For clause (*c*) substitute—

"(*c*) if he is a member of either Chamber of such a bicameral Legislature, during the continuance of a joint sitting, meeting, conference or joint committee of the Chambers of that Legislature."

Section 136.—Omit "or of the Chief Court of Lower Burma" and for "Bombay or Rangoon" substitute "or Bombay."

Schedule I, Order V.—In rule 22 for "Bombay and Rangoon" substitute "and Bombay".

In rule 26, in clause (*a*), for "the Governor-General in Council" substitute "the Central Government or the Crown Representative"; and in clause (*b*) for "the Governor-General in Council" substitute "the Provincial Government" and for the words "issued by a Court under this Code" substitute "issued under this Code by a Court of the Province".

Order XXI.—In rule 4 for "Bombay or Rangoon" substitute "or Bombay".

In rule 48, in sub-rule (1) for "the Government may by notification in the Gazette of India or in the Local Official Gazette, as the case may be," substitute "the Central Government or the Provincial Government may by notification in their Official Gazette"; in sub-rule (2) for "the Government" substitute "the Central Government or the Provincial Government, as the case may be"; and in sub-rule (3) for "the Government" substitute "the Central Government or the Provincial Government."

In Order XXVI in rules 4 and 8, for "any civil or military officer of the Government" substitute "any person in the service of the Crown".

In rule 21 omit "the High Court is established under the Indian High Courts Act, 1861, or the Government of India Act, 1915, and" and for "its ordinary original civil jurisdiction" substitute "the ordinary original civil jurisdiction of the High Court".

Order XXVII.—In the heading for "the Government" substitute "the Crown."

In rule 1.—For "the Secretary of State for India in Council" and for "the Government" substitute "the Crown".

In rule 2.—For "the Government" substitute "the Crown".

In rule 3.—For "against the Secretary of State for India in Council" substitute "against the Crown" and for "the words 'the Secretary of State for India in Council' " substitute "the appropriate name as provided in section 79, or, if the suit is against the Secretary of State, the words 'the Secretary of State' ".

For rule 4 substitute—

"4. The Crown pleader in any court shall be the agent of the Crown for the purpose of receiving processes against the Crown issued by such court."

In rule 5 for "the Secretary of State for India in Council" and "the said Secretary of State for India in Council" substitute "the Crown", for "with the Government" substitute "with the Crown" and for "Government pleader" substitute "Crown pleader".

In rule 6 for "Government pleader" substitute "Crown pleader" and for "the Secretary of State for India in Council" substitute "the Crown".

In rule 7 for "the Government" substitute "the Crown".

In rule 8 for "the Government" and "the Government pleader" substitute "the Crown" and "the Crown pleader."

After rule 8 insert—

"8A. No such security as is mentioned in rules 5 and 6 of Order XLI shall be required from the Crown or, where the Crown has undertaken the defence of the suit, from any public officer sued in respect of an act alleged to be done by him in his official capacity.

8B. In this Order "Crown" and "Crown pleader" mean respectively—

(a) in relation to any suit by or against the Secretary of State or the Central Government, or against a public officer in the service of that Government, the Central Government and such pleader as that Government may appoint whether generally or specially for the purposes of this Order;

(b) in relation to any suit by or against the Crown Representative, or against a public officer employed in connection with the exercise of the functions of the Crown in its relations with Indian States, the Crown Representative and such pleader as he may appoint, whether generally or specially, for the purposes of this Order; and

(c) in relation to any suit by, or against a Provincial Government or against a public officer in the service of a Province, the Provincial Government and the Government pleader, or such other pleader as the Provincial Government may appoint, whether generally or specially, for the purposes of this Order."

Order XXVIII.—In rule 1 for "serving the Government" substitute "serving under the Crown".

Order XXXII.—In rule 16 for "the Governor-General in Council or a Local Government" substitute "the Central Government, or the Crown Representative, or a Provincial Government".

Order XXXIII.—In rules 10, 12, 13 and 15 for "Government" substitute "Provincial Government".

Order XXXVII.—In rule 1 omit clause (*b*).

Order XLI.—Omit rule 7.

Order XLV.—In sub-rule (3) of rule 15 omit "by the Secretary of State for India in Council with the concurrence of the Lords Commissioners of His Majesty's Treasury".

After rule 16 insert—

"17. Where a certificate has been given under section 205(1) of the Government of India Act, 1935, the provisions of this Order shall apply in relation to appeals to the Federal Court as they apply in relation to appeals to His Majesty in Council and references in this Order to His Majesty in Council and to any Order of His Majesty in Council shall be construed as references to the Federal Court and the rules of the Federal Court:— Appeals to Federal Court.

Provided that

(*a*) rule 3 of this Order shall have effect as if at the end of subrule (1) thereof there were inserted the words "apart from any question of law as to the interpretation of the Government of India Act, 1935, or any Order in Council made thereunder";

(*b*) where the only ground of appeal stated in the petition is that any question of law as to the interpretation of the Government of India Act, 1935, or any Order in Council made thereunder has been wrongly decided, the petition need not pray for such a certificate as is mentioned in rule 3, and the like proceedings shall be had thereon as if such a certificate had been given except that no security shall be required for the costs of the respondent."

Appendix A to Schedule I.—Under heading (2) (which relates to the "description of parties in particular cases") for "the Secretary of State for India in Council" substitute "the Secretary of State or the Federation of India or the Province of....., as the case may be".

Appendix E to Schedule I.—In the heading to Form 21, for "officer of Government" substitute "public officer".

Schedule III.—In sub-paragraph (2) of paragraph 9 for "the Government" substitute "the Crown".

SCHEDULE II.

MADRAS ACTS.

The Madras Revenue Recovery Act, 1864.

(Madras II of 1864.)

Throughout the Act for "Government" substitute "the Provincial Government".

The Madras District Limits Act, 1865.

(Madras I of 1865.)

Section 1.—Omit "of Fort St. George" and "in any part of the Provinces subject to his control".

The Madras Irrigation Cess Act, 1865.

(Madras VII of 1865.)

Section 1.—For the first "Government" substitute "or on behalf of the Crown"; for the second and third "Government" substitute "Provincial Government" and for the fourth "Government" substitute "the Crown".

Section 1A.—For "Government" substitute "Provincial Government".

The Madras Cattle Disease Act, 1866.

(Madras II of 1866.)

Section 17.—For the words from "the cattle-pound fund" to "of this Act" substitute "the revenues of the Province".

The Madras Enfranchised Inams Act, 1866.

(Madras IV of 1866.)

Section 1.—For the second "Government" substitute "the Provincial Government".

The Madras City Land-Revenue (Amendment) Act, 1867.

(Madras VI of 1867.)

Section 28.—For "Government" substitute "the Provincial Government".

The Madras Wild Elephants Preservation Act, 1873.

(Madras I of 1873.)

Sections 3 and 3A.—For "of Government" substitute "of the Crown".

Sections 4 and 7.—For "the Government" substitute "the Crown".

The Madras Municipal Police Act, 1878.

(Madras VII of 1878.)

Throughout the Act for "Government" and "the Government" substitute "the Provincial Government".

The Madras Forest Act, 1882.

(Madras V of 1882.)

Section 1.—Omit "for the time being".

Section 2.—For "Governor of Fort St. George in Council" substitute "Provincial Government".

Section 24.—Omit "subject to the control of the Governor-General in Council".

After section 35 insert—

"35A.—Notwithstanding anything in section 35, the Central Government may make rules to prescribe the route by which alone timber may be imported and exported across any customs frontier as defined by the Central Government and any rules made under section 35 shall have effect subject to the rules made under this section."

Power of Central Government as to movements of timber across frontiers.

Section 36.—For "Government" substitute "Central or, as the case may be, Provincial Government".

Sections 41 and 44.—For "Government" substitute "the Crown".

Section 48.—For "Government" substitute "Crown for the purposes of the Province".

Sections 50 and 56.—For "Government" substitute "Crown".

Omit section 62.

Section 63.—For "Government" substitute "the Crown".

The Madras Rivers Conservancy Act, 1884.

(Madras VI of 1884.)

Section 6.—Omit from "Such officers" to the end of the section.

The Madras Outports Landing and Shipping Fees Act, 1885.

(Madras III of 1885.)

Section 3.—At the end of the section insert—

"(6) 'Government' or 'the Government' means, in relation to a port which is a major port within the meaning of the Indian Ports Act, 1908, the Central Government and, in relation to any other port, the Provincial Government".

Sections 4, 7 and 9.—For "Governor in Council" substitute "Government".

The Madras Abkari Act, 1886.

(Madras I of 1886.)

Section 3.—For clauses (15) and (16) substitute—

"(15) 'import' (except in the phrase 'import into British India') means to bring into the Province, otherwise than across a customs frontier as defined by the Central Government;

(16) 'export' means to take out of the Province, otherwise than across a customs frontier as defined by the Central Government;".

In clause (17) for "Madras Presidency" substitute "Province".

After clause (21) insert—

"(22) 'excise duty' and 'countervailing duty' mean any such excise duty or countervailing duty, as the case may be, as is mentioned in Item 40 of List II in the Seventh Schedule to the Government of India Act, 1935;

(23) 'excisable article' means—

(*a*) any alcoholic liquor for human consumption; or

(*b*) any intoxicating drug; or

(*c*) any medicinal or toilet preparation containing alcohol."

Section 10.—Omit "for the whole Presidency".

Section 13A.—For "throughout the whole Presidency" substitute "generally".

Section 15.—For "Government" substitute "Provincial Government".

Section 17.—For "A duty" substitute "An excise duty or countervailing duty"; for "liquor and intoxicating drugs" substitute "excisable articles" and omit the proviso.

After section 23 insert—

"Saving for duties being levied at commencement of Part III of Government of India Act, 1935.

23A.—(1) Until provision to the contrary is made by the Central Legislature, the Provincial Government may continue to levy any duty to which this section applies which it was lawfully levying immediately before the commencement of Part III of the Government of India Act, 1935, under this Chapter as then in force.

(2) The duties to which this section applies are—

(a) any duty on any liquor or intoxicating drugs other than excisable articles within the meaning of this Act; and

(b) any duty on an excisable article produced outside India and imported into the Province, whether across a customs frontier as defined by the Central Government or not.

(3) Nothing in this section shall authorise the levy of any duty which, as between goods manufactured or produced in the Province and similar goods not so manufactured or produced, discriminates in favour of the former or which, in the case of goods manufactured or produced outside the Province, discriminates between goods manufactured or produced in one locality, and similar goods manufactured or produced in another locality."

Section 28.—For "Government" substitute "the Provincial Government".

Section 29.—For "the Government" substitute "the Provincial Government".

Section 38.—For "by Government" substitute "under the Crown".

Section 71.—For "throughout the Presidency" substitute "generally".

Section 72.—For "Secretary of State for India in Council" substitute "Crown".

The Railway Protection Act, 1886.

(Madras IV of 1886.)

Section 1.—Omit "for the time being", but otherwise the section shall stand unmodified.

Section 2.—At the end insert—

"Safety Controlling Authority" has the same meaning as in the Indian Railways Act, 1890.

Section 9.—For "Governor in Council" substitute "Safety Controlling Authority".

Section 20.—For "Governor in Council" substitute "Safety Controlling Authority" and for "Fort St. George Gazette" substitute "Provincial Official Gazette", but save as aforesaid the section shall stand unmodified.

The Madras City Police Act, 1888.

(Madras III of 1888.)

Section 3.—At the end of the section insert—

" 'subordinate ranks' means the ranks inferior to that of Assistant Commissioner".

Section 5.—In the first paragraph omit the words from "who shall" to "same authority".

Section 6.—Omit the second sentence.

Section 9.—At the end of the section insert—

"Subject to the provisions of this Act, the pay and all other conditions of service of members of the subordinate ranks of the police force shall be such as may be determined by the Provincial Government."

Section 11.—For the words down to "and he" substitute "The Commissioner" and for "thereof" substitute "of the subordinate ranks of the police force".

Section 13.—After "member" insert "of the subordinate ranks".

Section 20.—For "the Government" and "Government" substitute "the Provincial Government".

Section 21.—In sub-section (1) for "Commissioner" substitute "Provincial Government".

Section 30.—For "Secretary of State for India" substitute "Crown".

Section 63.—For "Governor in Council" substitute "Crown".

The Madras Village Courts Act, 1888.

(Madras I of 1889.)

Section 1.—In sub-section (2) omit "for the time being" and the first "the Governor in Council" shall stand unmodified.

Section 5.—For "Government" substitute "the Provincial Government".

Section 13.—For "Government" substitute "the Crown".

The Madras Salt Act, 1889.

(Madras IV of 1889.)

Throughout the Act, save as otherwise provided, for "the Government" or "Government" substitute "the Central Government".

Section 4.—Omit "after consideration of any recommendation made by the Governor in Council in this behalf".

Section 5.—For "Central Board of Revenue" substitute "Central Government" and omit from "and may suspend" to the end of the section.

Omit section 6.

Section 13.—For "the property of Government" substitute "under the control of the Central Government".

Section 87.—For "Secretary of State for India in Council" substitute "Crown".

The Canals and Public Ferries Act, 1890.

(Madras II of 1890.)

Section 7.—For "Government" substitute "the Provincial Government".

Section 11.—Omit "and thereupon in every such case the revenue accruing therefrom shall be credited to the funds of such managing authority" and for "Government" substitute "the Provincial Government".

Section 13.—For "Government" substitute "the Provincial Government".

The Madras General Clauses Act, 1891.

(Madras I of 1891.)

Throughout the Act, for "Act of the Governor of Fort St. George in Council" substitute "Madras Act" and for "Act made by the Governor of Fort St. George in Council" and "Acts made by the Governor of Fort St. George in Council" substitute "Madras Act made" and "Madras Acts made".

Section 3.—Omit clauses (3), (12) and (15*a*).

After clause (17) insert—

"(17*a*) 'Madras Act' shall mean an Act made by the Governor of Fort St. George in Council under the Indian Councils Acts, 1861 to 1909 or any of those Acts, or the Government of India Act, 1915, or by the Local Legislature or the Governor of the Presidency of Madras under the Government of India Act, or by the Provincial Legislature or the Governor of Madras under the Government of India Act, 1935."

Omit clause (24).

For section 5 substitute—

Commencement of future Acts.

"5.—(1) Where any Act to which this Chapter applies is not expressed to come into operation on a particular day, then it shall come into operation, if it is an Act of the Legislature, on the day on which the assent thereto of the Governor, the Governor General or His Majesty, as the case may require, is first published in the Official Gazette and, if it is an Act of the Governor, on the day on which it is first published as an Act in the Official Gazette.

(2) In every such Act the date of such publication as aforesaid shall be printed either above or below the title of the Act and shall form part of the Act."

Section 7.—For "Government" substitute "Central Government or, as the case may be, the Provincial Government"

Section 22.—For the first "Government" substitute "any Government" and for the third "Government" substitute "the Government"; for "Presidency of Madras" and "Presidency" substitute "Province".

After section 22 insert—

"CHAPTER IV.

APPLICATION TO ORDINANCES AND REGULATIONS.

Application to Ordinances and Regulations under the Government of India Act, 1935.

23. The provisions of this Act shall apply—

(a) in relation to any Regulation made by the Governor of Madras under section 92 of the Government of India Act, 1935, as they apply in relation to Madras Acts made by the Provincial Legislature; and

(b) in relation to any Ordinance promulgated by the Governor under section 88 or section 89 of the said Act, as they apply in relation to Acts made under that Act by the Governor."

The Madras Board of Revenue Act, 1894.

(Madras I of 1894.)

Throughout the Act, for "Government" substitute "the Government concerned".

The Madras Proprietary Estates Village Service Act, 1894.

(Madras II of 1894.)

Throughout the Act, except in the expression "British Government", for "the Government" or "Government" substitute "the Provincial Government".

The Malabar Land Registration Act, 1895.

(Madras III of 1896.)

Section 10.—For "Secretary of State for India in Council" and "said Secretary of State in Council" substitute "Crown".

The Madras Court of Wards Act, 1902.

(Madras I of 1902.)

Section 33.—After "revenues of India" insert "or of the Federation or of the Governor General in Council or of any Province".

Section 39.—For "Government" substitute "the Crown".

Section 63.—For "officers of Government" substitute "servants of the Crown".

The Madras Port Trust Act, 1905.

(Madras II of 1905.)

Throughout the Act, save as otherwise provided, for "Local Government" substitute "Central Government" and for "Secretary of State for India in Council" substitute "Crown".

Section 5.—At the end of the section insert—

"Any requirement in this Act that notifications issued by the Board shall be published in the Official Gazette shall be construed as a requirement that the notifications shall be published in the Official Gazette of the Province.

Sections 7 and 8.—For "Government officials" substitute "servants of the Crown".

Section 23A.—For "Government" substitute "Central Government".

Section 48.—At the end of the section insert—

"This section does not apply to fines imposed by a Court".

Section 49.—Omit "in their discretion".

Section 52.—Omit "His Majesty or".

Section 63.—Omit "and, in the case of a loan of an amount of not less than 5 lakhs of rupees, of the Governor General in Council", and in sub-section (2) for "Local Government" substitute "Provincial Government".

Section 65.—Omit "with the previous sanction of the Governor General in Council".

Section 93.—After "service" insert "other than fines and penalties imposed by a Court".

The Madras Land Encroachment Act, 1905.

(Madras III of 1905.)

Throughout the Act, for "the property of Government" substitute "Crown property".

Section 2.—For the second "Government" substitute "the Crown".

Section 16.—For "Government" substitute "the Provincial Government".

The Madras Estates Land Act, 1908.

(Madras I of 1908.)

Section 5.—For "Government" substitute "Crown".

Section 20A.—For "Government ryotwari land" substitute "ryotwari land" and for "in the Government" substitute "in the Crown".

Sections 30 and 33.—For "Government" substitute "the Crown".

Section 72.—For "Secretary of State for India in Council" and for "Government" substitute "Crown".

Section 134.—For "the Government" and "Government" substitute "the Crown".

Section 142.—In sub-section (1) for "the Government" substitute "the Provincial Government" and for "to Government" substitute "to the Crown".

In sub-section (2) for "Government" substitute "Crown".

Section 164.—For "by the Government" substitute "on behalf of the Crown".

Section 168.—Omit "in their discretion".

Section 173.—For "Secretary of State for India in Council" substitute "Crown".

Section 185A.—For "Governor" substitute "Governor exercising his individual judgment".

The Limited Proprietors Act, 1911.

(Madras IV of 1911.)

Section 14.—For "the Secretary of State for India in Council" and for "Government" substitute "the Crown".

The Madras Medical Registration Act, 1914.

(Madras IV of 1914.)

After section 24 insert—

"Saving for provisions of the Government of India Act, 1935.

25. This Act has effect subject to the provisions of Chapter III of Part V of the Government of India Act, 1935".

The Schedule.—After "British Indian Government" insert "the Government of Burma".

The Madras Deputy Collectors Act, 1914.

(Madras VII of 1914.)

Omit section 3.

The Koodalmanickam Devaswom Act, 1918.

(Madras I of 1919.)

Section 2.—For "Fort St. George Gazette" substitute "official gazette of the province of Madras".

The Madras Agricultural Pests and Diseases Act, 1919

(Madras III of 1919.)

Section 4.—For "the Government" substitute "the Provincial Government" and for "of Government" substitute "of the Crown".

The Madras City Municipal Act, 1919.

(Madras IV of 1919.)

Section 3.—In clause (20) for "Government" substitute "the Crown".

Section 15.—For "service of the Government" substitute "service of the Crown"; for "pay to the Government" substitute

"make"; for "payable under the rules and regulations of the branch of the Government service to which he belongs and in force for the time being" substitute "required, by the conditions of his service under the Crown, to be paid by him or on his behalf".

Section 16.—Omit "72 (3) and (4)".

Section 27A.—At the end of the section insert—

"(8) The powers of the Provincial Government under this section shall, where one of the local authorities concerned is a cantonment authority or the port authority of a major port, only be exercisable with the concurrence of the Central Government."

Section 51.—For "officer of Government" and "servant of the Government" substitute "servant of the Crown".

Omit section 72.

Section 88.—For "service of the Government" substitute "service of the Crown"; for "pay to the Local Government" substitute "make" and after "payable under such rules and regulations" insert "by him or on his behalf".

Section 94.—In sub-section (1) for "service of the Government" substitute "service of the Crown"; for "partly by the Government" substitute "partly under the Crown"; for "pay to the Government" substitute "make" and for "payable" substitute "required to be made by him or on his behalf".

Section 96.—In sub-section (2) for the last "Local Government" substitute "government concerned".

Section 98.—Omit "and the Governor General in Council".

At the end of the section insert—

"Provided that the tax on companies shall only be leviable if it was being levied immediately before the commencement of Part III of the Government of India Act, 1935, and shall only be leviable until provision to the contrary is made by the Central Legislature."

Section 101.—In clause (*h*) for "Government lands" substitute "Crown lands"; for "property of Government" substitute "Crown property"; for the first "the Government" substitute "the Provincial Government" and for the second "the Government" substitute "the Crown".

Section 111.—At the end of sub-section (3) insert "Provided that where one of the local authorities concerned is a cantonment authority or the port authority of a major port, the decision of the Provincial Government shall be subject to the concurrence of the Central Government."

Sections 118 and 125.—For "Government" substitute "Crown".

Section 142.—Omit "and where the loan exceeds twenty-five lakhs of rupees, also of the Governor General in Council".

Section 148.—For "the Government of India" substitute "the Central or the Provincial Government" and for "by the Government" substitute "by the Central or the Provincial Government".

Section 151.—For "Governor-General in Council" substitute "Provincial Government".

Section 163.—For "Government" substitute "Crown".

Section 190.—For "owned by the Government of India" substitute "vested in the Crown and under the control of the Central Government".

Section 203.—For "the Government" substitute "the Central or the Provincial Government".

Sections 240 and 252.—For "Government or municipal land" substitute "Crown or municipal land".

Section 278.—For the second "such Government" substitute "the Crown".

Section 337A.—For "Government" substitute "Crown".

Section 347.—In sub-section (2) for "on the table of the Legislative Council" substitute "before both Chambers of the Provincial Legislature"; for "the Legislative Council approves" substitute "both Chambers approve" and after "additions" insert "to which both Chambers agree".

Section 393.—Omit "to the credit of which any fine imposed by him will be payable".

Section 394.—After "the same shall" insert "(except in the case of a fine)".

Section 400.—For "the Secretary of State in Council" substitute "the Provincial Government".

Section 413.—At the end of sub-section (3) insert—

"(4) The powers of the Provincial Government under this section shall, where one of the local authorities concerned is a cantonment authority or the port authority of a major port, only be exercisable with the concurrence of the Central Government."

Omit Schedule III.

Schedule V.—In rule 6 for "Governor-General in Council" substitute "Provincial Government and of the Federal Railway Authority or the Central Government".

The Madras Children's Act, 1920.

(Madras IV of 1920.)

Section 43.—For "between such State and the Governor General in Council" substitute "with that State".

The Madras District Municipalities Act, 1920.

(Madras V of 1920.)

Section 3.—Omit clause (12A), and in clause (21) for "Government" substitute "the Crown".

Section 4.—In sub-section (1) omit "without the sanction of the Governor-General in Council previously obtained".

Section 5.—For "on the table of the Legislative Council" substitute "before both Chambers of the Provincial Legislature"; for "His Majesty's Secretary of State for India in Council" substitute "the Provincial Government", and omit sub-section (3).

Section 7.—Omit "in their discretion".

Section 12C.—In sub-section (6) for clause (*b*) substitute—

"(*b*) If the Commissioner is in the service of the Crown, the Municipal Council shall make such contribution towards his leave allowances, pension and provident fund as may be required, by the conditions of his service under the Crown, to be made by him or on his behalf."

Sections 18 and 18A.—For "officer of Government" substitute "servant of the Crown".

Section 25.—For "an officer of Government" substitute "a servant of the Crown".

Section 26.—At the end of the section insert "(8) The powers of the Provincial Government under this section shall, where one of the local authorities concerned is a cantonment authority or the port authority of a major port, only be exercisable with the concurrence of the Central Government".

Section 38.—Omit "of Government".

Section 41.—For "on the table of the Legislative Council" substitute "before both Chambers of the Provincial Legislature" and omit "in their discretion".

Section 48.—For "servant of the Government" substitute "servant of the Crown".

Section 77.—In sub-section (1) after the first "Government servant" insert "employed in connection with the affairs of the Province" and for the words from "also pay" to the end of the sub-section substitute "also make any contribution towards the pension and leave allowances of such servant as may be required, by the conditions of his service under the Crown, to be paid by him or on his behalf".

In sub-section (2) for the first "Government" substitute "the Provincial Government".

Section 79.—Omit clause (*a*).

After section 80 insert—

Saving for certain provisions of Government of India Act, 1935.

"80A.—Nothing in this part of this Act shall authorise a Municipal Council to levy any tax which the Provincial Legislature has no power to impose in the Province under the Government of India Act, 1935:

Provided that a Municipal Council which, immediately before the commencement of Part III of the said Act was lawfully levying any such tax under this part of this Act as then in force, may continue to levy that tax until provision to the contrary is made by the Central Legislature."

Section 83.—For "property of Government" substitute "Crown property".

Section 93.—At the end of sub-section (4) insert "Provided that where one of the local authorities concerned is a cantonment authority or the port authority of a major port, the decision of the Provincial Government shall be subject to the concurrence of the Central Government".

Sections 100 and 105.—For "the Government" substitute "the Crown".

Section 108.—Omit "or surcharge on the income-tax".

Omit section 115.

Section 116.—In sub-section (5) omit "with the previous sanction of the Governor-General in Council" and at the end of the sub-section insert—

"Provided that rules relating to the decision of disputes shall not have effect—

(*a*) in relation to a dispute to which the cantonment authority, or the port authority of a major port, is a party, unless the rules are made with the concurrence of the Central Government; and

(*b*) in relation to a dispute to which the Railway Administration of a Federal Railway (as defined for the purposes of the Government of India Act, 1935) is a party, unless the rules are made with the concurrence of the Federal Railway Authority."

Section 150.—For "owned by the Government of India" substitute "vested in the Crown and under the control of the Central Government".

Sections 203 and 212.—For "Government or municipal land" substitute "Crown or municipal land".

Section 244.—Omit "or any property belonging to" and at the end of the section insert "or in respect of any Crown property".

Section 303.—In sub-section (2) in clause (*g*) for "the Government" substitute "that Government"; in clause (*h*) for "Government officers" substitute "officers of the Provincial Government", in clause (*k*) for "Government" substitute "the Provincial Government"; and in clause (*n*) omit "surcharge on income-tax."

Section 305A.—For "on the table of the Legislative Council" substitute "before each of the Chambers of the Provincial Legislature"; for "unless the Legislative Council" substitute "unless both Chambers" and after "additions" insert "to which both the Chambers agree".

Section 348.—In sub-section (2) after "the same shall" insert "except in the case of a fine".

Section 353.—For "Secretary of State for India in Council" substitute "Provincial Government".

Section 369.—At the end of the section insert "(4) The powers of the Provincial Government under this section shall, where one of the local authorities concerned is a cantonment authority or the port authority of a major port, only be exercisable with the concurrence of the Central Government".

The Fourth Schedule.—In rule 18 for "the Legislative Council" substitute "both Chambers of the Provincial Legislature".

In rule 28A for "pay the Local Government such contribution towards the pension and leave allowances of such servant as may be payable under the regulations for the time being in force for the branch of Government service to which he belongs" substitute "make such contribution towards the pension and leave allowances of that servant as may be required, by the conditions of his service under the Crown, to be made by him or on his behalf".

In rule 41.—For "Governor-General in Council" substitute "Provincial Government and of the Federal Railway Authority or the Central Government".

In rule 43 for "the Government" substitute "the Crown".

The Madras Town-Planning Act, 1920.

(Madras VII of 1920.)

Omit section 32.

The Madras Elementary Education Act, 1920.

(Madras VIII of 1920.)

Section 9.—For "under Government" substitute "under the Crown".

The Madras Local Boards Act, 1920.

(Madras XIV of 1920.)

Section 3.—In clause (7c) for "Government" substitute "the Provincial Government".

Omit clause (10A).

Section 3A.—For "on the table of the Legislative Council" substitute "before both Chambers of the Provincial Legislature".

Section 9.—Omit "in their discretion".

Section 23.—For "officer of Government" substitute "servant of the Crown".

Section 30.—At the end of the section insert—

"(8) The powers of the Provincial Government under this section shall, where one of the local authorities concerned is a cantonment authority or the port authority of a major port, only be exercisable with the concurrence of the Central Government."

Section 31.—For "officer of Government" substitute "servant of the Crown".

Section 37.—Omit sub-section (2).

Section 45.—Omit "in their discretion".

Section 54.—For "servant of the Government" substitute "servant of the Crown".

Section 74.—In sub-section (1) after the first "Government servant" insert "employed in connection with the affairs of the Province", and for the words from "also pay" to the end of the sub-section, substitute "also make any contribution towards the pension and leave allowances of such servant which may be required, by the conditions of his service under the Crown, to be made by him or on his behalf".

In sub-section (2) for the first "Government" substitute "the Provincial Government".

After section 76 insert—

"Saving for certain provisions of the Government of India Act, 1935.

76A.—Notwithstanding anything in the foregoing provisions of this Part of this Act a local board shall not, after the commencement of Part III of the Government of India Act, 1935, have power to levy any tax which the Provincial Legislature has no power to impose in the Province under that Act:

Provided that a local board which immediately before that date was lawfully levying any such tax under this Act as then in force may continue to levy that tax until provision to the contrary is made by the Central Legislature."

Section 93.—At the end of sub-section (4) insert "Provided that where one of the local authorities concerned is a cantonment authority or the port authority of a major port, the decision of the Provincial Government shall be subject to the concurrence of the Central Government."

Section 110.—In sub-section (5) omit "with the previous sanction of the Government of India" and at the end of the sub-section insert—

"Provided that rules relating to the decision of disputes shall not have effect in relation to any dispute—

(a) where one of the parties is a cantonment authority, unless the rules were made with the concurrence of the Central Government,

(b) where one of the parties is the Railway Administration of a Federal Railway, unless the rules were made with the concurrence of the Federal Railway Authority."

Section 113.—Omit "With the previous sanction of the Government of India"; after "(a)" insert "with the previous sanction of the Provincial Government and of the Federal Railway Authority or the Central Government"; and for "by the Government of India" substitute "by the Central or the Provincial Government".

Section 199.—For "Government officers" and "officers of Government" substitute "officers of the Provincial Government".

Section 201A.—For "on the table of the Legislative Council" substitute "before both Chambers of the Provincial Legislature"; for "unless the Legislative Council" substitute "unless both Chambers" and after "additions" insert "to which both the Chambers agree."

Section 224.—For "on recovery, be paid" substitute "except in the case of a fine, be paid on recovery".

Section 227.—For "Secretary of State for India in Council" substitute "Provincial Government".

Section 234.—At the end of the section insert—

"(4) The powers of the Provincial Government under this section shall, in relation to a dispute to which a cantonment authority is a party, only be exercisable with the concurrence of the Central Government".

Section 236.—For "the previous sanction of the Government of India" substitute "such sanction as is mentioned in sub-section (1) of section 113" and for "sub-section (1) of section 113" substitute "that sub-section".

Schedule IV.—In rule 11 for "the Legislative Council" substitute "both Chambers of the Provincial Legislature".

Schedule V.—In rule 5 under the heading "A. Village Funds" omit clauses (14) and (15), and under the heading "B. District Funds" omit clause (11).

Omit rule 7.

The Deputy President's Salary Act, 1921.

(Madras I of 1921.)

This Act shall cease to have effect.

The Madras Stamp (Amendment) Act, 1922.

(Madras VI of 1922.)

Schedule 1A.—Omit clause (*b*) of the exemptions under Article 30 and clause (*b*) of the exemptions under Division A of Article 47.

The Madras State Aid to Industries Act, 1922.

(Madras V of 1923.)

Section 3.—For "Legislative Council" substitute "Legislative Assembly".

Section 6.—For "the property of the Local Government" and "belonging to the Local Government" substitute "the property of the Crown for the purposes of the Province".

Omit section 7.

Section 17.—For "the Government" substitute "the Provincial Government".

Section 19.—Omit clause (*b*) (3) and for "Council" substitute "Assembly".

Section 20.—For "the Government" substitute "the Provincial Government".

The Madras University Act, 1923.

(Madras VII of 1923.)

Throughout the Act, except as otherwise expressly provided, for "Local Government" substitute "Central Government".

Section 7.—Omit sub-section (1) and for "Visitor" substitute "Central Government".

Section 9.—In sub-section (1) for "The Governor of Madras shall be the Chancellor of the University" substitute "The Chancellor of the University shall be such person as the Governor General, exercising his individual judgment, may nominate".

Section 10.—After "education" insert "in the Province of Madras".

Section 14.—For clause (3), under the heading "Class III—Other Members", substitute—

"(3) Four members elected by the members of the Legislative Council of the Province of Madras from among themselves; and eight members elected by the members of the Legislative Assembly of that Province from among themselves."

Section 16.—In clause (22) for "the Government" substitute "any Government".

Section 43.—For "the Government" substitute "the Government concerned" and for "discretion" substitute "option".

Section 44.—For the first "the Local Government" substitute "any Government" and omit from "The Local Government shall" to the end of the section.

Section 45.—In the first sentence for "Local Government" substitute "Provincial Government" and omit the second sentence.

Section 53.—For "lay the report before the Legislative Council" substitute "cause the report to be laid before both Chambers of the Central Legislature and the Provincial Legislature of Madras".

The Madras Survey and Boundaries Act, 1923.

(Madras VIII of 1923.)

Section 26.—For "the Legislative Council" substitute "each of the Chambers of the Provincial Legislature" and for "the Council" substitute "that Chamber".

The Tuticorin Port Trust Act, 1924.

(Madras II of 1924.)

Section 30.—For "Secretary of State for India in Council" substitute "Crown".

Section 37.—Omit "or the Government of India".

Section 49.—For "Secretary of State for India in Council" substitute "Crown".

Section 52.—After "Act" insert "other than fines and penalties imposed by a Court".

Section 53.—Omit "in their discretion".

Section 56.—For "His Majesty or the Secretary of State for India in Council" substitute "the Crown"

Section 66.—Omit "or any penalties or fines"

Section 67.—Omit "and, in the case of a loan of not less than 5 lakhs of rupees, of the Governor-General in Council" and in sub-section (2) for "Governor-General in Council" substitute "Provincial Government".

Section 69.—Omit from "subject in the case of section 9" to "'Governor-General in Council' and".

Section 71.—Omit "with the previous sanction of the Governor-General in Council".

Sections 73 and 74.—For "Secretary of State for India in Council" substitute "Crown".

Section 75.—For "Governor-General in Council" and "Secretary of State for India in Council" substitute "Provincial Government".

Sections 76 and 80.—For "Government of India" substitute "Central or the Provincial Government".

Section 99.—After "service" insert "other than fines and penalties imposed by a Court".

Section 121.—For the first "Secretary of State for India in Council" substitute "Crown for the purposes of the Province" and for the second "Secretary of State for India in Council" substitute "Provincial Government".

The President's Salary Act, 1924.

(Madras V of 1924.)

This Act shall cease to have effect.

The Andhra University Act, 1925.

(Madras II of 1926.)

Throughout the Act, except as otherwise expressly provided, for "Local Government" substitute "Central Government".

Section 8.—Omit sub-section (1) and for "Visitor" substitute "Central Government".

Section 10.—For "The Governor of Madras shall be the Chancellor" substitute "The Chancellor of the University shall be such person as the Governor-General, exercising his individual judgment, may nominate".

Section 15.—In the clauses included under the heading "Class III—Other Members—"

in clause (3) for "five" substitute "two"; omit "non official"; for "residents of any of" substitute "residents in the area for the time being comprised within"; omit "Ganjam", and after "Chittoor" insert "and three persons elected from among themselves by the members of the Legislative Assembly of Madras who are residents in that area";

in clause (4) for "schools in" substitute "schools recognised for the time being by the Provincial Government in the area which on the 10th June, 1930, was comprised in", and omit "recognised by the Local Government";

in clause (6) for "any of the districts of Ganjam" substitute "the area for the time being comprised within the districts of"; for "the landholders constituency" substitute "any landholders constituency", and for "Council" substitute "Assembly".

Section 19A.—For "Local Government" substitute "Provincial Government of Madras".

Section 21.—For "Fort St. George Gazette" substitute "Gazette of India".

Section 36.—For "the Government" substitute "the Central Government" and omit sub-section (2).

Section 37.—For the first "the Local Government" substitute "the Central or any Provincial Government" and omit clause (3).

Section 37A.—For "Local Government" and "Local Governments" substitute "Provincial Government" and "Provincial Governments".

Omit section 37C.

Section 38.—In the first sentence, for "Local Government" substitute "Provincial Government" and omit the second sentence.

Section 47.—For "Fort St. George Gazette" substitute "Gazette of India".

The Madras Hindu Religious Endowments Act, 1926.

(Madras II of 1927.)

Omit section 5.

Section 10.—For "on the table of the Legislative Council" substitute "before both the Chambers of the Provincial Legislature" and for "unless the Legislative Council" substitute "unless both the Chambers".

Section 48.—For "Secretary of State for India in Council" substitute "Crown" and for "officers of Government" substitute "servants of the Crown".

Section 70.—For "Secretary of State for India in Council" substitute "Crown" and for "officer of Government" substitute "servant of the Crown".

Section 72.—For "on the table of the Legislative Council" substitute "before both the Chambers of the Provincial Legislature"; for "unless the Legislative Council" substitute "unless both Chambers" and after "additions" insert "to which both the Chambers agree".

The Madras Local Authority Entertainments Tax Act, 1926.

(Madras V of 1927.)

Throughout the Act "the Gazette" shall stand unmodified.

Section 1.—Omit "without the previous sanction of the Governor-General in Council".

Section 2.—Clause (5) shall stand unmodified.

Section 8.—Omit from "and shall on recovery" to the end of the section.

The Annamalai University Act, 1928.

(Madras I of 1929.)

Section 6.—For "Governor-General in Council" substitute "Provincial Government".

Section 9.—For "Governor of Fort St. George" substitute "Governor of Madras".

Section 15.—In clause (3) under the heading "Class III—Other members", for "five" substitute "two" and after "vote" insert "and three members elected by the Madras Legislative Assembly from among its members according to the same principle".

For section 28 substitute—

"28.—(1) The Provincial Government shall have the right to cause an inspection or inquiry to be made in respect of any matter, institution or property connected with the University by such person or persons as it may appoint in that behalf. Visitation.

The Provincial Government shall in every case give notice to the University of its intention to cause such inspection or inquiry to be made and the University shall be entitled to be represented thereat.

(2) The Provincial Government shall communicate to the Senate and to the Syndicate its views with reference to the results of such inspection or inquiry and shall, after ascertaining the opinion of the Senate and the Syndicate thereon, advise the University upon the action to be taken.

(3) The Syndicate shall report to the Provincial Government the action, if any, which is proposed to be taken, or has been taken, upon the results of inspection or inquiry.

Such report shall be accompanied by the opinion of the Senate thereon and shall be submitted within such time as the Provincial Government may direct.

(4) Where the Senate or Syndicate do not within a reasonable time take action to the satisfaction of the Provincial Government, the Provincial Government may, after considering any explanation furnished or representation made by the Senate or the Syndicate, issue such directions as it may think fit and the Senate and the Syndicate shall comply with those directions.

In the event of the Senate or the Syndicate not complying with those directions within such time as may be fixed in that behalf by the Provincial Government, the Provincial Government shall have power to appoint some person or body to carry them out and make such orders as to the expenses thereof as he deems fit to make".

Section 39.—For "Governor-General in Council" substitute "Provincial Government".

The Indian Fisheries (Madras Amendment) Act, 1927.

(Madras II of 1929.)

Section 3.—For the first "the Legislative Council" substitute "both the Chambers of the Provincial Legislature" and for "of the Legislative Council" substitute "of both those Chambers".

The Madras Local Boards (Amendment) Act, 1930.

(Madras XI of 1930.)

Schedule.—In rule 6 (1) for "on the table of the Legislative Council" substitute "before both the Chambers of the Provincial Legislature".

The Malabar Tenancy Act, 1929.

(Madras XIV of 1930.)

Section 54.—For "the Legislative Council" substitute "each of the Chambers of the Provincial Legislature" and for "it" substitute "that Chamber".

The Madras Motor Vehicles Taxation Act, 1931.

(Madras III of 1931.)

Section 10.—Omit sub-section (4).

Sections 11, 16 and 17.—For "Council" substitute "Assembly".

The Madras Government Roads Traffic Control Act, 1931.

(Madras V of 1931.)

Section 3.—For "the Legislative Council" substitute "each Chamber of the Provincial Legislature" and for "the Council" substitute "that Chamber".

The Madras Co-operative Societies Act, 1932.

(Madras VI of 1932.)

Section 21.—For "the Government" substitute "the Crown".

Section 30.—In sub-section (2) for "Local Government" substitute "Government" and at the end add the following paragraph:—

"In this sub-section 'Government', in relation to stamp duties, means the Government which is the collecting Government for the purposes of the Indian Stamp Act, 1899, and, save as aforesaid, means the Provincial Government".

Section 65.—For "on the table of the Legislative Council" substitute "before both Chambers of the Provincial Legislature".

The Bhavani Reservoir Irrigation Cess Act, 1933.

(Madras XVI of 1933.)

Section 1.—For "by the Local Government" substitute "by, or on behalf of, the Crown".

Section 5.—For "by the Government" substitute "by, or on behalf of, the Crown".

The Tirumalai-Tirupati Devasthanams Act, 1932.

(Madras XIX of 1933.)

Omit section 3.

Section 19.—In sub-section (3) for the words from "contribute" to the end of the section substitute "make such contribution to the leave allowances, pension and provident fund of the Commissioner as may be required, by the conditions of his service under the Crown, to be made by him or on his behalf".

The Madras Commercial Crops Market Act, 1933.

(Madras XX of 1933.)

Section 9.—For sub-section (2) substitute—

"(2) The Committee shall, in the case of any servant of the Crown whom it employs, make such contributions towards his pension and leave allowances as may be required, by the conditions of his service under the Crown, to be paid by him or on his behalf".

Section 18.—For "on the table of the Legislative Council" substitute "before both Chambers of the Provincial Legislature".

The Madras Co-operative Land Mortgage Banks Act, 1934.

(Madras X of 1934.)

Section 6.—For "the Legislative Council" substitute "both Chambers of the Provincial Legislature".

The Madras Public Service Commission Act, 1936.

(Madras XII of 1936.)

This Act shall cease to have effect.

The Madras Public Service Commission Act, 1936

(Madras XVI of 1936.)

Throughout the Act for "Presidency" substitute "Province".

SCHEDULE III.

BOMBAY ACTS.

In all Bombay Acts, except as otherwise expressly provided, for "Commissioner in Sindh" and "Commissioner in Sind" substitute "Provincial Government".

The Markets and Fairs Act, 1862.

(Bombay IV of 1862.)

Section 10.—For "Government" substitute "the Provincial Government".

The Bhagdari and Narwadari Act, 1862.

(Bombay V of 1862.)

Section 6.—For "of Government", "to Government", and "by Government" substitute "of the Provincial Government", "to the Provincial Government" and "by the Provincial Government".

The Indus Vessels Act, 1863.

(Bombay I of 1863.)

Throughout the Act for "Governor in Council" and "Commissioner in Sindh" substitute "Central Government".

Omit section 13.

Section 14.—Omit "and expended".

For section 15 substitute—

"15. The Central Government may make such rules as may be necessary for carrying out the provisions of this Act:

Provided that all such rules shall be notified in the Official Gazette."

Central Government to make rules.

The Exemptions from Land-revenue (No. 1) Act, 1863.

(Bombay II of 1863.)

Section 2.—For "payment to Government" and "paid to Government" substitute "payment to the Provincial Government" and "paid to the Provincial Government"; and for "of Government" and "belonging to Government" substitute "of the Crown" and "belonging to the Crown".

Sections 3 and 4.—For "Government" substitute "the Provincial Government".

Section 6.—For the first and second "Government" substitute "the Crown", and for the third "Government" substitute "the Provincial Government".

Section 10.—For "Government" substitute "the Crown".

Section 11.—For the first "Government" substitute "the Crown"; for the second "Government" substitute "the Provincial Government" and for "British Government" substitute "Provincial Government".

Section 13.—For "of Government" substitute "of the Crown".

Section 15.—For "Government" substitute "the Provincial Government".

Section 16.—For "that Government" substitute "that the Provincial Government", and for "the British Government" substitute "the Provincial Government".

The Exemptions from Land-revenue (No. 2) Act, 1863.

(Bombay VII of 1863.)

Section 2.—For "as Government" substitute "as the Provincial Government".

Section 3.—For the first "Government" substitute "the Provincial Government" and for the second "Government" substitute "the Crown for the purposes of the Province".

Section 6.—For "payment to Government", "paid to Government" and "payable to Government" substitute "payment to the Provincial Government", "paid to the Provincial Government" and "payable to the Provincial Government", and for "of Government" and "belonging to Government" substitute "of the Crown" and "belonging to the Crown".

Section 7.—For "Government" substitute "the Provincial Government".

Section 9.—For "on the part of Government" substitute "on the part of the Provincial Government".

Section 12.—For "Government" substitute "the Provincial Government".

Section 14.—For "Government" substitute "the Crown".

Section 15.—For "British Government" substitute "Provincial Government".

Sections 17 and 28.—For "Government" substitute "the Crown".

Section 30.—For "Government" substitute "the Provincial Government".

Section 32.—For "the Government" substitute "the Provincial Government"; for "that Government" substitute "that the Provincial Government" and for "the British Government" substitute "the Provincial Government".

The Sindh Courts Act, 1866.

(Bombay XII of 1866.)

Section 1.—In the second sentence, omit "three or more", and for "Additional" substitute "Assistant".

Omit the third sentence.

Section 1A.—For "Additional" substitute "Assistant", and omit from "shall be appointed" to "removed. They".

Section 2.—Omit from "and save" to the end of the section.

Section 4.—Omit "acting under the general control of the Government of India", "with the sanction of the Local Government" and "and shall be presided over by a Judge appointed by the Commissioner in Sindh".

Omit sections 9 and 10.

Section 15A.—Omit sub-section (1), and for "with similar sanction" substitute "with the sanction of the Provincial Government".

The Legislative Council Witnesses Act, 1866.

(Bombay XIII of 1866.)

This Act shall cease to have effect.

The Bombay City Sanitary Regulation Act, 1867.

(Bombay VI of 1867.)

Throughout the Act, except as otherwise provided, for "Government" substitute "the Provincial Government".

Section 2.—For "Government" substitute "the Central Government".

Section 5.—For 'a covenanted medical officer of Government" substitute "a medical officer who is a covenanted servant of the Crown".

Section 9.—For "Government" substitute "the Central Government".

Section 11.—Omit "and for the disinfection and cleansing of vessels on board of which such persons are or recently have been". After "repeal such rules" insert—

"It shall be lawful for the Central Government from time to time to make and publish general rules for the disinfection and cleansing of vessels on board of which there are, or recently have been, persons suffering, or who have recently suffered, from any infectious disease dangerous to life, and from time to time to alter or repeal such rules."

For "such rules or any of them" substitute "any rules made under this section".

Section 12.—At the end of the section insert—

"Provided that the Central Government may, if it thinks fit, by notification make separate provision determining what diseases shall for the purposes of the provisions of this Act relating to vessels within the limits of the port of Bombay be held to be infectious diseases dangerous to life."

Section 13.—For the first "Government" substitute "the appropriate Government"; for "a covenanted medical officer of Government, or" substitute "a medical officer who is a covenanted servant of the Crown, or be" and at the end of the section insert—

"In this section 'the appropriate Government' means, in relation to the consulting officer of health, the Provincial Government and, in relation to the Health Officer of the Port, the Central Government."

Section 14.—For "Government" substitute "the Provincial Government".

The Bombay Village Police Act, 1867.

(Bombay VIII of 1867.)

Section 5.—For "Magistrate of the district", "Commissioner" and "said Magistrate" substitute "Provincial Government" and in sub-section (3) omit "with the consent of the Commissioner".

Sections 9 and 11.—For "Government" substitute "the Provincial Government".

The Bombay Ferries Act, 1868.

(Bombay II of 1868.)

Throughout the Act, except as otherwise provided and except in the phrase "Bombay Government Gazette", for "Government" substitute "the Provincial Government".

Section 14.—Omit "under rules made by the Local Government".

The Bombay Act V of 1867 (Amendment) Act, 1868.

(Bombay III of 1868.)

Section 2.—For "Government" substitute "the Provincial Government".

The Bombay Tramways Act, 1874.

(Bombay I of 1874.)

Section 2.—Omit "constituted by Act III of 1872 or any other Act passed by the Governor of Bombay in Council" and "appointed under the provisions of the said Act III of 1872 or any subsequent Municipal Act".

Section 3.—For "by Government" substitute "by the Provincial Government".

Section 3A.—For "Government" substitute "the Provincial Government".

Section 4.—For "by Government" substitute "by the Provincial Government", and omit "under the signature of a Secretary to Government".

Sections 4A and 9.—For "of Government" substitute "of the Provincial Government".

Section 14.—For "by Government" substitute "by the Provincial Government".

Section 15.—"Governor of Bombay in Council" shall stand unmodified.

Section 24.—Omit "to be signified under the hand of a Secretary to the said Governor in Council".

The Civil Jails Act, 1874.

(Bombay II of 1874.)

Section 12.—For "Government" substitute "Provincial Government".

Section 16.—For the first "Government" substitute "the Crown for the purposes of the Province" and for the second and third "Government" substitute "the Provincial Government".

The Bombay Hereditary Offices Act.

(Bombay III of 1874.)

Throughout the Act, except as expressly provided and except in the phrases "British Government", "present or former Government", "Government records" and "Government villages", for "Government" substitute "the Provincial Government".

Section 22.—Omit "or order of the Governor General of India in Council"; and for "property of Government" substitute "property vested in the Crown for the purposes of the Province".

Section 66.—For the first and second "Government" substitute "the Crown".

Section 67.—For the first "Government" substitute "the Crown".

Section 70.—For "property of Government" substitute "property of the Crown for the purposes of the Province".

The Tolls on Roads and Bridges Act, 1875.

(Bombay III of 1875.)

Section 3.—For "the Government" substitute "the Crown" and for "of Government" substitute "of the Provincial Government".

Section 5.—For "His Excellency the Governor in Council" substitute "the Provincial Government".

Section 10.—For "Government" substitute "Provincial Government".

The Bombay City Land-revenue Act, 1876.

(Bombay II of 1876.)

Throughout the Act, except as otherwise provided and except in the expression "Bombay Government Gazette", for "Government" substitute "the Provincial Government".

Section 6.—For the last "Governor in Council" substitute "Provincial Legislature".

Section 24.—For "Government" substitute "the Crown for the purposes of the Province".

Sections 25 and 26.—For "Government lands or foreshore" substitute "lands or foreshore vested in the Crown for the purposes of the Province".

Sections 35 and 37.—For "Government" substitute "the Crown".

The Bombay Abkari Act, 1878.

(Bombay V of 1878.)

Throughout the Act, except as otherwise provided—

(*a*) for "Government", except in the phrase "Government Gazette", substitute "the Provincial Government";

(*b*) for "excisable article" and "excisable articles", except in sections 19 and 19A, substitute "intoxicant" and "intoxicants".

Section 3.—After clause (4) insert—

"(4*a*) 'excise duty' and 'countervailing duty' means any such excise duty or countervailing duty, as the case may be, as is mentioned in Item 40 in List II to the Seventh Schedule to the Government of India Act, 1935."

For clause (10) substitute—

"(10) 'to import' (except in the phrase 'to import into British India') means to bring into the Province, otherwise than across a customs frontier as defined by the Central Government:

'to export' means to take out of the Province, otherwise than across a customs frontier as defined by the Central Government:

'to transport' means to move to one place from another place within the Province."

For clause (15) substitute—

"(15) 'excisable article' means—

(*a*) any alcoholic liquor for human consumption; or

(*b*) any intoxicating drug; or

(*c*) any medicinal or toilet preparation containing alcohol."

After clause (15) insert—

"(15*a*) 'intoxicant' means any liquor or intoxicating drug."

Omit clause (18).

Section 6.—For "Commissioners may, subject to such orders as may from time to time be passed by Government in this behalf" substitute "Provincial Government may" and for "Government officer" substitute "servant of the Crown".

Omit section 7.

In section 8 for "the last two sections" substitute "section 6"

Sections 9 and 10.—For "imposed under section 19" substitute "payable under Chapter VI".

Section 19.—For "A duty" substitute "An excise duty or countervailing duty, as the case may be", and omit proviso (*ii*).

After section 29 insert—

"Saving for duties being levied at commencement of Part III of the Government of India Act, 1935.

29A. Until provision to the contrary is made by the Central Legislature, the Provincial Government may continue to levy any duty to which this section applies which it was lawfully levying immediately before the commencement of Part III of the Government of India Act, 1935, under this Chapter as then in force.

(2) The duties to which this section applies are—

(*a*) any duty on intoxicants which are not excisable articles within the meaning of this Act; and

(*b*) any duty on an excisable article produced outside India and imported into the Province whether across a customs frontier as defined by the Central Government or not.

(3) Nothing in this section shall authorise the levy by the Provincial Government of any duty which, as between goods manufactured or produced in the Province and similar goods not so manufactured or produced, discriminates in favour of the former, or which, in the case of goods manufactured or produced outside the Province discriminate between goods manufactured or produced in one locality and similar goods manufactured or produced in another locality".

Section 32.—In sub-section (2) after "to such person" insert "by, or by the authority of, the Provincial Government".

Section 35A.—For "Government officers" substitute "servants of the Crown".

Section 39.—For "Karachi and Aden" substitute "and Karachi".

Section 61.—"Governor General in Council" shall stand unmodified.

Section 67.—For "Government" substitute "the Crown".

The Karachi Vaccination Act, 1879.

(Bombay IV of 1879.)

Throughout the Act, for "the Government" substitute "the Provincial Government".

The Bombay Land Revenue Code, 1879.

(Bombay V of 1879.)

Throughout the Act, except in the expressions "Government paper", "Government Treasury" and "Government Gazette" and except as otherwise specifically provided, for "Government" substitute "the Provincial Government".

Section 1.—Omit "Aden".

Section 3.—In clause (14) for "Government" substitute "the Crown".

Section 4.—Omit "subject to the orders of the Government of India".

Section 12.—For "Commissioner of the Division in which his taluka is situated" substitute "Provincial Government".

Section 13.—For the first "Collector" substitute "Provincial Government".

Section 16.—For "the Collector under the general orders of Government and of the Commissioner" substitute "the Provincial Government".

Section 17.—For the second "Government" substitute "the Central or the Provincial Government".

Omit sections 21, 23 and 24.

Section 25.—For "Government property" substitute "property of the Crown".

Section 26.—For "appertaining to Government" substitute "of the Crown".

Section 27.—Omit "who may enter into a bond, in the form of Schedule B"; for the first and second "Government" substitute "the Crown" and for the third "Government" substitute "Provincial Government".

Section 29.—Omit "under section 23" and for "Government" substitute "the Crown".

Omit Chapter IV.

Section 37.—In sub-section (1) for the first "Government" substitute "the Crown" and for the second "Government" substitute "the Government concerned".

In sub-section (2) for "Government" substitute "the Crown".

Section 37A.—For the first "Government" substitute "the Crown for the purposes of the Province" and for the second "Government" substitute "the Crown".

Section 38.—For "property of Government" substitute "property of the Crown for the purposes of the Province".

Section 40.—For "Government" substitute "the Crown".

Section 41.—For the first "Government" substitute "the Crown for the purposes of the Province".

Section 42.—For "Government" substitute "the Crown".

Section 43.—For the first and second "Government" substitute "the Crown" and for the third "Government" substitute "Crown".

Section 44.—For the first "Government" substitute "the Crown".

Section 45.—For "Government" substitute "the Crown".

Section 55.—For the first "Government" substitute "the Crown".

Section 56.—For "Government" substitute "the Crown".

Section 62.—For "Government" substitute "Crown".

Section 63.—For "Government" substitute "the Crown for the purposes of the Province".

Sections 69, 72, 74 and 78.—For "Government" substitute "the Crown".

Section 94A.—For "the Secretary of State or Government" substitute "the Crown".

Section 111.—For "Government officers" substitute "servants of the Crown", and for the third "Government" substitute "the Crown".

Section 133.—For "Secretary of State for India in Council" substitute "Crown".

Section 134.—For "Government" substitute "the Crown".

Section 135L.—For "Secretary of State or Government or any officer of Government" substitute "Crown or any servant of the Crown".

Section 160.—For "Government" substitute "the Crown".

Section 163.—For "Government" substitute "the Crown for the purposes of the Province".

Section 187.—For "Secretary of State for India in Council" substitute "Crown".

Section 200.—For "Government" substitute "the Crown".

Section 214.—For "vesting in Government" substitute "vesting in the Crown for the purposes of the Province".

Sections 216 and 218.—For "Government" substitute "the Crown".

Omit Schedule B.

Schedule D.—For "Secretary of State for India in Council" substitute "Crown".

Schedule H.—For "Secretary of State in Council" substitute "Government of Bombay [*or* Sind, *as the case may be*]"; for "His Excellency the Governor of Bombay in Council" substitute "the Provincial Government", and omit from "This Sanad is executed" to the end of the Schedule.

The Bombay Port Trust Act, 1879.

(Bombay VI of 1879.)

Throughout the Act, except as otherwise expressly provided, for "the Government" and (except in the phrase "Government Gazette") for "Government" substitute "the Central Government".

Section 3.—In clause (2) omit the second "by Government".

Section 14B.—For "Government" substitute "the Crown".

Section 22A.—For "Governor in Council" substitute "Central Government".

Section 27.—Omit "in their discretion".

Section 28.—For "Secretary of State for India in Council" substitute "Crown".

Section 32.—For "Government" substitute "any Government".

Section 33.—For "Secretary of State for India in Council" substitute "Crown".

Section 34.—For the first "Secretary of State for India in Council" substitute "Crown"; for "the Governor in Council under section 29" substitute "the Central or the Provincial Government"; for "the Secretary of State in Council" and "Government" substitute "that Government" and for the second "Secretary of State for India in Council" substitute "Government concerned".

Section 35.—For "the Provincial revenues of the Presidency of Bombay" substitute "the revenues of the Central Government".

Section 36.—For "Governor in Council" substitute "Central Government".

Section 39.—Omit from the beginning to "this Act; or". "Bombay Government Gazette" shall stand unmodified.

In proviso (*i*) omit from "and if" to the end of the proviso; omit proviso (*ii*), and after proviso (*iii*) insert—

"(*iv*) No notification shall be necessary if the Board raise the money by borrowing from the Central or the Provincial Government."

Section 41.—For "Secretary of State for India in Council" substitute "Crown".

Section 41A.—After "Secretary of State for India in Council" insert "or the Central or the Provincial Government".

Section 42.—Omit the proviso.

Sections 42E and 43B.—"Bombay Government Gazette" shall stand unmodified.

Section 48.—At the end of the section insert—

"This section does not apply to fines and penalties imposed by a Court".

Section 51.—For "Secretary of State for India in Council" substitute "Crown".

Section 60.—For "Governor in Council" substitute "Central Government" and omit "by an order in writing signed by a Secretary to Government".

Section 61.—Omit "or to the Secretary of State for India in Council".

Section 64.—"Bombay Government Gazette" shall stand unmodified.

Section 67.—For "officer of Government" substitute "servant of the Crown".

Section 74.—"Bombay Government Gazette" shall stand unmodified.

Section 79.—For "the Government" substitute "any Government".

Section 85.—Omit "fines and".

Schedule B.—"Bombay Government Gazette" shall stand unmodified.

Schedule C.—For "Secretary of State for India in Council" substitute "Crown".

The Bombay Irrigation Act, 1879.

(Bombay VII of 1879.)

Throughout the Act, except as otherwise specifically provided and except in the phrases "Government Gazette" and "records of Government", for "Government" and "the Government" substitute "the Provincial Government".

Section 3.—In clause (1) for the first and third "Government" substitute "any Government" and for the second "Government" substitute "the Crown"; in clause (3) for "the Government" substitute "any Government", and in clause (4) for "Government" substitute "any Government".

Section 4.—For "officer of Government" and "Government officer" substitute "servant of the Crown".

Section 80.—For the second "Government" substitute "the Crown for the purposes of the Province".

Section 83.—For "Secretary of State for India in Council" substitute "Provincial Government".

Section 90.—For "on the Council table" substitute "before the Legislative Assembly of the Province" and for "by the Council" substitute "by the Assembly".

Section 92.—In sub-section (4) for "belonging to Government" substitute "belonging to the Crown".

The Khoti Settlement Act, 1880.

(Bombay I of 1880.)

Throughout the Act, except as otherwise specifically provided and except in the phrase "Government Gazette", for "Government" substitute "the Provincial Government".

Sections 10, 11 and 22.—For "Government" substitute "the Crown".

Section 26.—For "Government dues" substitute "Crown dues".

Section 28.—For "Government" substitute "the Crown".

The Sindh Village Officers Act, 1881.

(Bombay IV of 1881.)

Section 3.—For "Subject to the general orders of Government, the Commissioner in Sindh" and "the said Commissioner" substitute "the Provincial Government".

Section 4.—For "said Commissioner may, with the previous sanction of Government" substitute "Provincial Government may" and for "Government" substitute "the Provincial Government".

Section 5.—For "the Commissioner in Sindh" and "Government" substitute "the Provincial Government".

Section 8.—For "Commissioner in Sindh may, with the previous sanction of Government" substitute "Provincial Government may".

The Bombay Landing and Wharfage Fees Act, 1882.

(Bombay VII of 1882.)

Throughout the Act for "the Governor in Council" substitute "Government" and for "Bombay Government Gazette and other local official Gazette" substitute "Official Gazette".

Section 4.—After "this Act" insert "the term 'Government' in relation to a major port means the Central Government, and save as aforesaid means the Provincial Government;"

Section 10.—For the words from the beginning to "applies" substitute "In any port to which this Act applies expenditure incurred under any of the following heads shall be deemed for the purposes of the next succeeding section to be expenditure under this Act for the port, that is to say, expenditure—"

Section 11.—Omit sub-section (4).

Section 12.—Omit from "and thereupon" to the end of the section.

The Bombay Highway Act, 1883.

(Bombay I of 1883.)

Omit section 6.

Section 8.—For "belonging to the Government" substitute "belonging to the Crown".

The Karachi Tramways Act, 1883.

(Bombay II of 1883.)

Section 4.—For "Government" substitute "the Provincial Government".

Section 7.—For "Governor of Bombay in Council" substitute "Provincial Government".

Section 29.—After "Secretary of State for India in Council" insert "or the Central or any Provincial Government".

The Karachi Port Trust Act, 1886.

(Bombay VI of 1886.)

Throughout the Act "Governor in Council" and "Bombay Government Gazette" shall stand unmodified.

Section 26.—Omit "in their discretion".

Section 59B.—Omit "acting on behalf of the Secretary of State for India in Council".

Section 59C.—For "Secretary of State for India in Council" substitute "Crown".

Section 59F.—After "Secretary of State for India in Council" insert "or the Central or Provincial Government".

Section 59H.—For "Secretary of State for India in Council" substitute "Crown."

Section 77.—Omit "fines and".

Sections 81 and 82.—"Sind Official Gazette" shall stand unmodified.

The Protection of Pilgrims Act, 1887.

(Bombay II of 1887.)

Throughout the Act for "Governor in Council" substitute "Central Government".

Section 5.—After "payment" insert "to the Central Government"; for "Government" substitute "that Government"; and at the end of the section insert—

"Provided that, until provision to the contrary is made by the Central Legislature, all such fees shall be payable to the Provincial Government under this section as were being lawfully taken thereunder immediately before the commencement of Part III of the Government of India Act, 1935."

The Bombay Prevention of Gambling Act, 1887.

(Bombay IV of 1887.)

Section 6.—For "Government" substitute "the Provincial Government".

The Matadars Act, 1887.

(Bombay VI of 1887.)

Throughout the Act, except in the phrase "Government Gazette", for "Government" substitute "the Provincial Government".

The Toda Giras Allowances Act, 1887.

(Bombay VII of 1887.)

Section 2.—For "Government" substitute "the Crown".

The City of Bombay Municipal Act, 1888.

(Bombay III of 1888.)

Throughout the Act, except as otherwise specifically provided and except in the expressions "Government offices", "Government Gazette", "Municipal Government", "Government promissory notes" and "Government Grant-in-Aid", for "Government" or "the Government" substitute "the Provincial Government".

Section 3.—In clause (*o*) for the second "Government" substitute "the Central or any Provincial Government".

Section 59.—For "Government officer" substitute "servant of the Crown".

Section 88.—For "Government" substitute "the Crown".

Section 89.—For "Her Majesty as the same were vested in Her Majesty before the first day of July, 1863" substitute "His Majesty for the purposes of the province."

Sections, 89B, 89C, 89D and 89E.—For "created by Government" substitute "created by the Crown."

Section 91A.—In subsection (7), for "Secretary of State for India in Council" substitute "Central or Provincial Government."

In subsection (8), for the first "Government" substitute "the Central or the Provincial Government" and for the second "Government" substitute "that Government."

Section 91B.—After "His Majesty" insert "for the purposes of the Province."

Section 93.—For "Secretary of State for India in Council" substitute "Crown."

Sections 94 and 95.—For "Government" substitute "the Crown."

Section 98.—For "Government officer" substitute "servant of the Crown."

Section 101.—For "Secretary of State for India in Council" substitute "Crown."

Section 102.—For "Government" substitute "the Crown."

Section 105.—For "Secretary of State for India in Council" substitute "Crown."

Section 106.—For "the Secretary of State for India in Council" substitute "the Central or the Provincial Government" and omit the proviso.

Section 107.—For "the Secretary of State for India in Council" substitute "the Central or the Provincial Government"; for "under the orders of the Governor-General in Council, by the Governor in Council" substitute "by the Central Government or, as the case may be, the Provincial Government" and omit the proviso.

Section 108.—For "the Secretary of State for India in Council" substitute "the Central or the Provincial Government."

Section 109A.—Omit "or of the Governor-General in Council."

Section 110F.—For the proviso to subsection (2) substitute—

> "Provided that nothing in this subsection shall authorise the levying of any tax which could not be imposed in the Province by the Provincial Legislature under the Government of India Act, 1935."

Section 111.—After "under any rule, regulation or byelaw in force thereunder" insert "other than fines imposed by a court"; omit from "the balance, after all expenses" to "made under this Act" and for "from Government" substitute "from any Government."

Section 143.—For "Secretary of State for India in Council" substitute "Crown."

Section 144.—For "Secretary of State for India in Council" substitute "Central Government, or the Crown Representative, or the Provincial Government, as the case may be."

Section 146.—For "Government" substitute "the Crown."

Section 148.—For "Government" substitute "the Crown."

Sections 170 and 172.—For "Secretary of State for India in Council" substitute "Crown."

Section 194.—In subsection (1), for "by Government" substitute "by the Government concerned" and for "of Government" substitute "of the Crown."

In subsection (2), for the second and fourth "Government" substitute "the Crown" and for the third "Government" substitute "the Government concerned."

Section 195C.—In subsections (2) and (6), for "Government" substitute "the Crown."

Section 299.—In subsection (2), for "Her Majesty or" substitute "the Crown, possession shall not be taken as aforesaid without the previous sanction of the Government concerned and, when the land or building is vested" and for "of the Governor-General of India in Council or of the Governor in Council" substitute "by an Indian law."

Section 348.—In subsection (2), for "Government" substitute "the Central Government."

Sections 454, 456 and 460.—For "Government" substitute "the Central Government."

Section 463.—Omit "made under either of the last preceding sections" and for "by Government" substitute "in the case of a byelaw made under clause (*s*) of section 461, by the Central Government, and in the case of any other byelaw, by the Provincial Government."

Section 467.—For "by Government" substitute "by the Central or the Provincial Government, as the case may be," and "Bombay Government Gazette" shall stand unmodified.

Section 470.—At the end insert—

"(5) The powers conferred by this section on the Provincial Government shall, in relation to any byelaw made under clause (*s*) of section 461, be powers of the Central Government."

Section 513.—Omit "to the credit of which any fines inflicted by him will be payable."

Section 513A.—In subsection (3) omit from "and shall be a first charge" to "credited to the municipal fund."

The Aden Port Trust Act, 1888.

(Bombay V of 1888.)

This Act shall cease to have effect except as part of the law of Aden.

The Gujarat Taluqdar's Act, 1888.

(Bombay VI of 1888.)

Throughout the Act, except as otherwise specifically provided and except in the phrases "Government Gazette" and "Government Records," for "Government" substitute "the Provincial Government."

Section 2.—In clause (*a*) of subsection (1) for "Government" substitute "the Crown."

Section 8.—For "Government" substitute "the Crown."

Section 32.—For the first "Government" substitute "the Crown."

Section 33.—For "claims of Government" and "revert to Government" substitute "claims of the Crown" and "revert to the Crown."

The Bombay Village Sanitation Act, 1889.

(Bombay I of 1889.)

Throughout the Act, except in the phrases "Government Gazette" and "local Government treasury" and except as otherwise specifically provided, for "Government" and "the Government" substitute "the Provincial Government."

Section 2.—Omit "Aden and its dependencies, Perim."

Section 30D.—For "the Government" substitute "any Government."

Section 30G.—For the second "Government" substitute "Crown for the purposes of the Province."

The Bombay Salt Act, 1890.

(Bombay II of 1890.)

Throughout the Act, except as otherwise specifically provided and except in the phrases "Government warehouse" and "British or any former Government," for "Government" substitute "the Central Government."

Section 4.—Omit the proviso to subsection (1) and subsection (4).

Omit sections 6 and 7.

Section 8.—For "Government" substitute "the Provincial Government."

The Bombay District Police Act, 1890.

(Bombay IV of 1890.)

Throughout the Act, except as otherwise specifically provided and except in the phrase "Government Gazette," for "Government" or "the Government" substitute "the Provincial Government."

Section 1.—For "Sind and Aden" substitute "and Sind" and for "either Sind or Aden" substitute "Sind."

Section 2.—"Governor of Bombay in Council" shall stand unmodified.

Section 3.—At the end of the section insert—

"(i) the expression 'subordinate ranks' means members of the police force below the rank of Deputy Superintendent."

Section 4.—Omit "subject in the case of officers of the Indian Police of and above the rank of Assistant Superintendent to the control of the Governor General in Council" and from "and

receiving" to the end of the section; and at the end of the section insert—

"Subject to the provisions of this Act, the pay and all other conditions of service of members of the subordinate ranks of any police force shall be such as may be determined by the Provincial Government."

Section 5.—Omit subsection (3).

Section 6.—In subsection (1) omit "and may suspend, reduce or transfer any of such officers as it may think fit and Government may also dismiss or remove from service any Deputy Superintendent of Police."

In subsection (2), omit "He may be transferred, suspended or removed from office by Government."

Omit sections 8 and 9.

Section 22A.—For "Any District Superintendent" substitute "The Provincial Government" and omit "in his discretion."

Section 25.—In the proviso to subsection (2), for "Bombay Legislative Council" substitute "Legislative Assembly of the Province" and for "said Council" substitute "said Assembly."

Section 29.—For "police officer" substitute "member of the subordinate ranks of the police force" and omit "below the grade of Assistant or Deputy Superintendent."

Omit section 31A.

Sections 34 and 61B.—For "Government" substitute "the Crown."

Section 81.—For "suit against Government" substitute "suit against the Crown."

Schedule A.—"Governor of Bombay in Council" shall stand unmodified.

The Bombay District Vaccination Act, 1892.

(Bombay I of 1892.)

Throughout the Act, except in the expression "Government Gazette," for "Government" substitute "the Provincial Government."

The Female Infanticide Prevention (Amendment) Act, 1897.

(Bombay III of 1897.)

Section 1 shall cease to have effect.

The Government Occupants (Sind) Act, 1899.

(Bombay III of 1899.)

Section 1.—Omit "being part of the territories for the time being administered by the Governor of Bombay in Council."

Section 3.—For the first "the property of the Government" substitute "vested in the Crown for the purposes of the Province" and for the second "Government" substitute "the Crown."

Sections 7 and 9.—For "the Government" substitute "the Crown."

The Bombay District Municipal Act, 1901.

(Bombay III of 1901.)

Throughout the Act, except as otherwise specifically provided, for "Government" or "the Government" except in section 45 and except in the expressions "Bombay Government Gazette," "Government Executive Engineer," "Municipal Government," "servant of Government" and "servants of Government" substitute "the Provincial Government," and for "servant of Government" and "servants of Government" substitute "servant of the Crown" and "servants of the Crown."

Section 2.—"Governor of Bombay in Council" shall stand unmodified.

Section 3.—Omit the proviso to clause (3).

In clause (9) for "from Government" substitute "from the Crown."

In clause (18) after "in Council" insert "or the Central or any Provincial Government."

Section 26.—For "Government officers" substitute "servants of the Crown."

Section 35.—For "Government officer" substitute "servant of the Crown."

Section 39.—At the end of the section insert "Provided that where one of the local bodies concerned is a cantonment authority, any such decision shall be subject to the concurrence of the Central Government."

Section 42.—For "of Government" substitute "of the Crown."

Section 46.—In proviso (*b*) for "Government" substitute "Crown," and for all the words from "contribute" to the end of the proviso substitute "make such contributions to his pension and leave allowances as may be required, by the conditions of his service under the Crown, to be made by him or on his behalf."

In proviso (*c*) for the first and the fifth "Government" substitute "the Government concerned" and for the second, third and fourth "Government" substitute "the Crown."

Section 48.—In subsection (1) in clause (*f*) omit "and the taking of a census" and "or census," and in clause (*j*) for "Governor-General in Council" substitute "Provincial Government."

After subsection (1) insert—

"(1*a*) Every municipality may, from time to time, with the previous sanction, in the case of city municipalities, of the Central Government, and in other cases of the Commissioner, make, alter or rescind byelaws, but not so as to render them inconsistent with this Act, for the taking of a census within the municipal district and for enforcing the supply of such information as may be necessary to make the census effective."

In subsection (3) after "submitted to the" and "information of the" insert "Central Government."

Section 50.—For "Secretary of State for India in Council" substitute "Crown."

Section 51.—After "this Act" insert "other than fines imposed by a court" and for "Secretary of State for India in Council" substitute "Crown."

Section 58.—For "Government Educational Department" substitute "Educational Department of the Provincial Government."

Section 59.—Omit clause (x—a); for clause (xi) substitute "(xi) any other tax (not being a toll on motor vehicles and trailers, save as provided by section 14 of the Bombay Motor Vehicles Tax Act, 1935)"; for "Government stores" and "Government property" substitute "Crown stores" and "Crown property," and at the end of the section insert—

"(2) Nothing in this section shall authorise the imposition of any tax which the Provincial Legislature has no power to impose in the Province under the Government of India Act, 1935:

Provided that a municipality which immediately before the commencement of Part III of the said Act was lawfully levying any such tax under this section as then in force, may continue to levy that tax until provision to the contrary is made by the Central Legislature."

Section 65.—For "officer of Government" substitute "servant of the Crown."

Section 68.—For "Secretary of State for India in Council" substitute "Crown."

Section 83.—For "Government officer" substitute "servant of the Crown."

Section 126.—For "officer of Government" substitute "servant of the Crown," but save as aforesaid for "Government" substitute "any Government."

Section 186E.—For "Governor-General in Council" substitute "Government in whose service he was employed immediately before the appointment."

The City of Bombay Police Act, 1902.

(Bombay IV of 1902.)

Throughout the Act, except as otherwise specifically provided and except in the expression "Government Gazette," for "Government" substitute "the Provincial Government."

Section 2.—"Governor of Bombay in Council" shall stand unmodified.

Section 3.—At the end insert—

"(*m*) 'subordinate ranks' shall mean any ranks below that of Deputy Superintendent."

Section 5.—Omit the words from "who shall" to the end of the section.

Section 6.—In sub-section (1) omit "Any Deputy or Assistant Commissioner so appointed may be at any time removed by order of the Governor in Council."

Section 7.—Omit sub-section (1).

In sub-section (2) for "of the Police Force other than a Deputy or Assistant Commissioner" substitute "of the subordinate ranks of the Police Force" and omit the proviso.

Section 8.—For "appointed by the Commissioner of Police" substitute "belonging to the subordinate ranks of the Police Force."

Section 9.—In sub-section (1) for "Commissioner of Police" substitute "Provincial Government" and omit "in his discretion."

Section 14.—For "Government" substitute "the Crown."

Section 16A.—For "of and below the grade of Inspector" substitute "of the subordinate ranks" and for "Rules for the time being in force" substitute "Rules or such other rules as may from time to time be made by the Provincial Government."

Section 22.—In clause (*f*) of sub-section (1) for "Government or municipal officers" substitute "servants of the Crown or municipal officers."

Section 29.—In sub-section (4) for "be at the disposal of Government" substitute "form part of the revenues of the Province."

Section 33.—For "His Majesty's Royal Indian Marine Service" substitute "the Royal Indian Navy."

Sections 40, 42 and 43.—For "Royal Indian Marine Service" substitute "the Royal Indian Navy."

Section 53.—For "be at the disposal of Government" substitute "form part of the revenues of the province."

Section 111.—For "Government" substitute "the Crown."

Section 113.—For "Royal Indian Marine Service" substitute "the Royal Indian Navy."

Section 123A.—For "Government" substitute "the Central or the Provincial Government."

The Bombay General Clauses Act, 1904.

(Bombay I of 1904.)

Section 3.—At the end of clause (5) insert—

"or the Indian Councils Acts, 1861 to 1909, or the Government of India Act, 1915, or made by the local Legislature, or the Governor, of the Presidency of Bombay under the Government of India Act, or by the Provincial Legislature, or the Governor of Bombay, under the Government of India Act, 1935."

Omit clauses (6), (7), (8), (21) and (27).

Section 4.—Omit "British India," "Government of India" and "Presidency of Bombay."

Section 5.—For sub-section (1) substitute—

"(1) Where any Bombay Act is not expressed to come into operation on a particular day, then it shall come into operation, if it is an Act of the Legislature, on the day on which the assent thereto of the Governor, the Governor-General or His Majesty, as the case may require, is first published in the Official Gazette, and if it is an Act of the Governor, on the day on which it is first published as an Act in the Official Gazette."

Section 14.—For "the Government" substitute "any Government."

Section 22.—For "the day on which it is first published in the Bombay Government Gazette after having received the assent of the Governor-General" and "the Act has been published as aforesaid" substitute "the passing thereof."

Section 24.—For "Local Government" substitute "Central Government, or as the case may be, the Provincial Government."

After section 30 insert—

"Application to Ordinances and Regulations under the Government of India Act, 1935.

31. The provisions of this Act shall apply—

(a) in relation to any Regulation made by the Governor of Bombay under section 92 of the Government of India Act, 1935, as they apply in relation to Acts made by the Provincial Legislature; and

(b) in relation to any Ordinance promulgated by the Governor of Bombay under section 88 or section 89 of the said Act, as they apply in relation to Acts made under that Act by the Governor."

The Bombay Court of Wards Act, 1905.

(Bombay I of 1905.)

Section 1.—Omit "and Aden."

Section 6.—For "officer of Government" substitute "servant of the Crown."

Section 7.—For "an officer of Government" substitute "a servant of the Crown."

Section 14.—For "on the part of Government" substitute "on the part of the Crown."

The Mamlatdars' Courts Act, 1906.

(Bombay II of 1906.)

Section 1.—Omit "and Aden."

Section 26.—For "against Government or against any officer of Government" substitute "against the Crown or against any servant of the Crown."

The Prince of Wales Museum Act, 1909.

(Bombay III of 1909.)

Throughout the Act, except as otherwise specifically provided and except in the phrase "Bombay Government Gazette," for "Government" substitute "Provincial Government."

Section 6.—For the first "the Government" substitute "the Central or the Provincial Government" and omit the proviso.

The Bombay Medical Act, 1912.

(Bombay VI of 1912.)

Section 10.—For "Acts of the Governor of Bombay in Council" substitute "Bombay Acts" and for "Acts of the Governor-General in Council" substitute "Central Acts."

After section 21 insert—

22. This Act has effect subject to the provisions of Chapter III of Part V of the Government of India Act, 1935."

"Saving for provisions of the Government of India Act, 1935.

The Schedule.—In clause 2 after "school" insert "in India or Burma" and for "by Government" substitute "by any Government in India or Burma."

The Bombay Smoke-nuisances Act, 1912.

(Bombay VII of 1912.)

Throughout the Act, except in the expression "Government Gazette," for "Government" substitute "the Provincial Government."

Omit Section 13.

The Bombay Town Planning Act, 1915.

(Bombay I of 1915.)

Section 3.—For "without the sanction of the Governor-General, any Act of the Governor-General in Council" substitute "any Indian law relating to any of the matters enumerated in List I in the Seventh Schedule to the Government of India Act, 1935."

Section 39.—For "officers of Government" and "officer of Government" substitute "servants of the Crown" and "servant of the Crown."

The Bombay City Survey Act, 1915.

(Bombay IV of 1915.)

Sections 2 and 10.—For "Government" substitute the "Crown."

The Bombay Disqualification of Aliens Act, 1918.

(Bombay VI of 1918.)

Section 2.—In clause (*a*) for "a state in India" substitute "an Indian State."

Omit clause (*b*).

The Schedule.—Omit the entry relating to the trustees of the port of Aden.

The Bombay Public Conveyances Act, 1920.

(Bombay VII of 1920.)

Section 36.—Omit sub-section (5).

The Schedule shall stand unmodified.

The City of Bombay Primary Education Act, 1920.

(Bombay XV of 1920.)

Omit section 17.

The Bombay Pleaders Act, 1920.

(Bombay XVII of 1920.)

Section 1.—Omit "and Aden."

The Deputy President's Salary Act, 1921.

(Bombay I of 1921.)

This Act shall cease to have effect.

The Bombay Primary Education Act, 1923.

(Bombay IV of 1923.)

Throughout the Act, except as otherwise specifically provided and except in the expressions "Government Gazette" and "Government of India Act," for "Government" or "the Government" substitute "the Provincial Government."

Section 2.—Omit "and includes in the case of Aden, the Executive Committee of Aden."

Omit section 23

Section 27.—For "Government Educational Department" substitute "Educational Department of the Provincial Government."

The Bombay Local Boards Act, 1923.

(Bombay VI of 1923.)

Throughout the Act, except in the expression "Bombay Government Gazette," "Government establishment," "Government Executive Engineer," "Government of India" and "Government treasury," and except as otherwise specifically provided, for "the Government" or "Government" substitute "the Provincial Government"; for "servant of the Government" and "officer of the Government" substitute "servant of the Crown" and for "servants of the Government" and "officers of the Government" substitute "servants of the Crown."

Section 1.—Omit "and Aden."

Section 3.—For "from the Government" substitute "from the Crown."

Section 35.—"Government officers" shall stand unmodified.

Section 41.—"Government officer" shall stand unmodified.

Section 46.—At the end of the section insert—

"Provided that, where one of the local bodies is a cantonment authority, the decision of the Provincial Government, or of the officer, shall be subject to the concurrence of the Central Government."

Section 50.—Omit "Government servant."

Section 50A.—For "Government" substitute "the Central or the Provincial Government."

Sections 56 and 59.—For "Government" substitute "Crown."

Section 74.—Omit "and subject to any general or special Orders of the Governor-General in Council" and for the second "Governor-General in Council" substitute "Provincial Government."

Section 75.—Omit clause (*d*), in clause (*e*) "placed by the Government under the management of a Local Board or," clauses (*g*), (*h*) and (*i*) and in clause (*n*) "and assignments of revenue"; and in the first proviso after "ferry, road, or bridge" insert "vested in one or more than one Local Board."

Section 76.—Omit clauses (*g*), (*h*) and (*i*).

Section 78.—In clause (*b*) for "allowances and contributions for pension, according to the rules from time to time made by the Government" substitute "and allowances" and after "by the Board" insert "and of such contributions for the pension of any such officers and servants as may be required, by the conditions of their service under the Crown, to be paid by them or on their behalf."

Section 99.—For "under rules made under clause (*a*) of sub-section (3) of section 80A of the Government of India Act, a local authority may be authorised to impose by any law made by the local legislature without the previous sanction of the Governor-General" substitute "the Provincial Legislature has power under the Government of India Act, 1935, to impose in the Province."

For "consent of the Government" substitute "consent of the Government concerned"; for "belonging to Government" substitute "belonging to the Crown" and "Government stores" and "Government property" shall stand unmodified. At the end of the section insert—

"Until provision to the contrary is made by the Central Legislature a district local board which was, immediately before the commencement of Part III of the Government of India Act, 1935, lawfully levying any tax under this section as then in force, may continue to levy that tax notwithstanding that it is not a tax which the Provincial Legislature has, under that Act, power to impose in the Province."

Section 131.—For "vest in the Government" substitute "vest in the Crown for the purpose of the Province."

The Bombay Prevention of Prostitution Act, 1923.

(Bombay XI of 1923.)

Section 1.—For "the Government" substitute "the Provincial Government."

Section 9.—In sub-section (3) for "the Government" substitute "the Provincial Government."

The President's Salary Act, 1924.

(Bombay XII of 1924.)

This Act shall cease to have effect.

The Bombay Children Act, 1924.

(Bombay XIII of 1924.)

Throughout the Act, except as otherwise expressly provided and except in the expression "Government Gazette," for "Government" substitute "Provincial Government."

Section 33A.—At the end of sub-section (2) and at the end of sub-section (3) insert—

"Provided that no child or youthful offender shall be transferred under this section to any other Province without the consent of the Government of that other Province."

Section 37.—For "Bombay Legislative Council" substitute "Provincial Legislature" and for "Legislative Assembly or the Council of State representing any constituency in the Bombay Presidency" substitute "Central Legislature representing the Province or any part of the Province."

Section 45.—For "any Government department" substitute "any department of the Central or the Provincial Government."

Section 52.—Omit sub-section (3).

For sub-section (4) substitute—

"(4) The power to make rules under this Act shall be subject to the condition of previous publication and to the further condition that the rules so made—

(*a*) shall be laid before each of the Chambers of the Provincial Legislature for one month previous to its next session;

(*b*) shall be liable to be modified or annulled by a resolution in which each of the Chambers concurs at the said next session."

The Bombay Prevention of Adulteration Act, 1925.

(Bombay V of 1925.)

Section 12.—Omit sub-section (2).

Section 19.—In sub-section (3) for "the Bombay Legislative Council" substitute "each of the Chambers of the Legislature"; for the first "of the said Council" substitute "of the said Chamber"; for the second "of the said Council" substitute "in which both Chambers concur" and for the second and the third "Government" substitute "the Provincial Government."

The Bombay Betting Tax Act, 1925.

(Bombay VI of 1925.)

Section 3.—Omit the proviso to sub-section (2).

Section 9.—For "the Government" substitute "the Provincial Government."

The Bombay Co-operative Societies Act, 1925.

(Bombay VII of 1925.)

Throughout the Act, except in the expressions "Government Gazette" and "Government aid" and except as otherwise specifically provided, for "Government" or "the Government" substitute "the Provincial Government."

Section 24.—For "Government" substitute "the Crown."

Section 33.—In sub-section (2) for "Local Government" substitute "Government"; and at the end of the sub-section insert—

"In this sub-section 'Government' in relation to stamp duty, means the Government which is the collecting Government for the purposes of the Indian Stamp Act, 1899, in relation to court fees means the Government which is the appropriate Government for the purposes of the Court Fees Act, 1870, and save as aforesaid means the Provincial Government."

Section 65.—For "Government" substitute "the Crown."

Section 71.—For "the Bombay Legislative Council" substitute "each of the Chambers of the Provincial Legislature" and for "by a resolution of the said Council tabled at its next session" substitute "by a resolution in which each of the Chambers concurs at the said next session."

The Bombay Municipal Boroughs Act, 1925.

(Bombay XVIII of 1925.)

Throughout the Act, except as otherwise specifically provided, and except in section 56, and except in the expressions "Bombay Government Gazette," "Government Executive Engineer," "Municipal Government," "Government officer," "Government officers" and "Government Treasury," for "Government" or "the Government" substitute "the Provincial Government"; and for "servant of the Government" and "servants of the Government" substitute "servant of the Crown" and "servants of the Crown."

Omit section 2.

Section 3.—In clause (15) after "Secretary of State for India in Council" insert "or the Central or the Provincial Government".

In clause (18) for "from the Government" substitute "from the Crown."

Section 47.—At the end of the section insert—

"Provided that if one of the bodies concerned is a cantonment authority, any such decision shall be subject to the concurrence of the Central Government."

Section 53.—For "Government" substitute "the Crown for the purposes of the Province."

Section 58.—Substitute for proviso (*b*)—

"(*b*) if an officer serving or having served under a municipality has been, or is, transferred from or to the service of the Crown, or is partly employed by the Crown and partly by a municipality, the municipality shall make such contributions to his pension and leave allowances as may be required, by the conditions of his service under the Crown, to be made by him or on his behalf."

In proviso (*c*) for the first and the fifth "the Government" substitute "the Government concerned" and for the second, third and fourth "the Government" substitute "the Crown."

Section 61.—In clause (*j*) of sub-section (1) omit "and the taking of a census" and "or census."

After sub-section (1) insert—

"(1*a*) A municipality may, from time to time, with the previous sanction of the Central Government, make, alter or rescind byelaws, but not so as to render them inconsistent with this Act, for the taking of a census within the municipal borough and for enforcing the supply of such information as may be necessary to make such census effective."

In sub-section (3) for the first "the Government" substitute "the Central or the Provincial Government" and for the second "the Government" substitute "that Government."

Section 63.—For "Secretary of State for India in Council" substitute "Crown."

Section 65.—After "levied by it under this Act" insert "other than fines imposed by any court" and for "Secretary of State for India in Council" substitute "Crown."

Section 73.—For Clause (xiv) substitute—

"(xiv) any other tax (not being a toll on motor vehicles and trailers, save as provided by section 14 of the Bombay Motor Vehicles Tax Act, 1935) which under the Government of India Act, 1935, the Provincial Legislature has power to impose in the Province."

Omit clause (xv).

In proviso (*a*) for "Government" substitute "Crown."

At the end of the section insert—

"(2) Nothing in this section shall authorise the imposition of any tax which the Provincial Legislature has no power to impose in the Province under the Government of India Act, 1935:

Provided that a municipality, which immediately before the commencement of Part III of the said Act was lawfully levying any such tax under this section as then in force, may continue to levy that tax until provision to the contrary is made by the Central Legislature."

Section 74.—For the first "Government" substitute "Government concerned or the Crown Representative, as the case may be" and for the second and the fourth "Government" substitute "Government concerned or the Crown Representative."

Section 81.—For "Government" and "the Government" substitute "the Crown".

Section 85.—For "Secretary of State for India in Council" substitute "Crown."

Section 156.—For "Government" substitute "the Crown" and for "officer of Government" substitute "servant of the Crown".

Section 221.—For "on the table of the Bombay Legislative Council" substitute "before each Chamber of the Provincial Legislature" and for "of the said Council tabled at" substitute "in which each of the said Chambers concurs during."

The Sind Courts Act, 1926.

(Bombay VII of 1926.)

For section 4 substitute—

"4. The Chief Court shall consist of a Chief Judge and other Judges." Constitution of Chief Court.

Omit sections 5 and 6.

Section 7.—For "officiating" substitute "acting" and for "Governor-General in Council" substitute "Provincial Government."

Section 13.—For "Government Advocate" substitute "Advocate-General" and omit the last sentence.

Section 16.—For the words from the beginning to "may appoint" substitute "There may be appointed"; and omit sub-sections (2), (4) and (5).

Section 37.—For "Secretary of State for India in Council" substitute "Crown"; for "any officer of Government" substitute "any servant of the Crown" and for "an officer of Government" substitute "a servant of the Crown."

Omit sections 41 and 42.

The Schedule shall stand unmodified.

The Bombay Cotton Markets Act, 1927.

(Bombay XVIII of 1927.)

Preamble and section 2.—Omit "Aden."

Section 6.—In sub-section (4) for "on the table of the Bombay Legislative Council" substitute "before each Chamber of the Provincial Legislature" and for "of the said Council tabled at the" substitute "carried in each Chamber during its."

Section 9.—For "regulations made by Government in this behalf and" substitute "conditions of his service under the Crown."

Section 16.—For "in Government" substitute "in the Crown for the purposes of the Province."

Section 19.—Omit "fines and."

The Bombay University Act, 1928.

(Bombay IV of 1928.)

Section 4A.—For "Local Government" substitute "Central Government."

Section 9.—For "The Governor of Bombay for the time being shall be the Chancellor of the University" substitute "the Chancellor of the University shall be such person as the Governor-General, exercising his individual judgment, may nominate in this behalf."

Section 12.—For "Government" substitute "Central Government."

Section 13.—For "Legislative Council of the Governor of Bombay" substitute "Bombay Legislative Assembly," and elsewhere for "Council" substitute "Assembly."

Section 17.—For "Local Government" substitute "Central Government."

Section 32.—Omit sub-section (2), and in sub-section (3) for "Government of Bombay" substitute "Central Government."

Sections 39 and 42.—For "the Government" substitute "the Central Government."

Section 44.—For "Government" substitute "the Central Government."

Section 45.—For "Legislative Council of the Governor of Bombay" substitute "Bombay Legislative Assembly."

The Schedule shall stand unmodified.

The Karachi Small Causes Court Act, 1929.

(Bombay IV of 1929.)

Section 14.—For clause (*b*) substitute—

"(*b*) suits concerning any act ordered or done by, or by authority of, any Government in British India or the Crown Representative, or by, or by authority of, any member of the Council of the Governor-General or of the Governor of Bombay, or any Minister of the Governor-General or of the Governor of Bombay or of the Governor of Sind in his official capacity."

Section 27.—For "Government" substitute "the Crown."

Section 40.—For sub-sections (1) and (2) substitute—

"(1) there may be appointed an officer to be called the Registrar of the Court and to be the chief ministerial officer of the Court.

(2) There may also be appointed a Deputy Registrar and as many clerks, bailiffs and other ministerial officers as may be sanctioned by the Provincial Government for the administration of justice by the Court, and for the exercise and performance of the powers and duties conferred and imposed on it by this Act or any other law for the time being in force."

Omit sub-section (4).

The Indian Registration (Bombay Amendment) Act, 1929.

(Bombay V of 1929.)

Omit section 2.

The Bombay Maternity Benefit Act, 1929.

(Bombay VII of 1929.)

Section 2.—For "The Government" substitute "The Provincial Government."

Section 14.—For "on the table of the Bombay Legislative Council" substitute "before each Chamber of the Provincial Legislature" and after the first "modified" insert "by a Resolution in which both the Chambers concur."

The Bombay Borstal Schools Act, 1929.

(Bombay XVIII of 1929.)

Sections 11 and 12.—For "Government" substitute "the Provincial Government."

Section 14.—For "officer of Government" substitute "servant of the Crown."

Section 19.—In sub-section (3) for "on the table of the Bombay Legislative Council" substitute "before each Chamber of the Provincial Legislature" and after the first "modified" insert "by a Resolution in which both Chambers concur."

The Bombay Local Fund Audit Act, 1930.

(Bombay XXV of 1930.)

Throughout the Act, except in the expressions "Government Gazette" and "Government Auditor," for "Government" or "the Government" substitute "the Provincial Government."

Section 15.—In sub-section (3) for "on the table of the Bombay Legislative Council" substitute "before each Chamber of the Provincial Legislature" and after the first "modified" insert "by a Resolution in which both Chambers of the Legislature concur."

The Bombay Finance Act, 1932.

(Bombay II of 1932.)

Section 3.—Omit "except Aden."

Section 5.—For "by Government" substitute "by any Government or the Crown Representative."

Section 9.—For "discretion" substitute "option."

Section 11.—In sub-section (3) for "on the table of the Bombay Legislative Council" substitute "before each Chamber of the Provincial Legislature" and after the first "or modified" insert "by a Resolution in which both Chambers concur."

The Second Schedule.—For "Government" substitute "the Crown."

The Bombay Cotton Contracts Act, 1932.

(Bombay IV of 1932.)

Section 5.—For "upon the table of the Bombay Legislative Council" substitute "before each of the Chambers of the Provincial Legislature"; for the first "of the said Council" substitute "thereof" and for the second "of the said Council" substitute "in which both Chambers concur."

The Bombay Weights and Measures Act, 1932.

(Bombay XV of 1932.)

Section 3.—At the end of the section insert—

"(12) 'Government' means, in relation to the establishment of standards of weight, the Central Government, and save as aforesaid means, the Provincial Government."

Section 41.—In sub-section (3) for "The rules made" substitute "Any rules made by the Provincial Government," for "on the table of the Bombay Legislative Council" substitute "before each Chamber of the Provincial Legislature" and for "of the said Council" substitute "in which both Chambers concur."

The Bombay Special (Emergency) Powers Act, 1932.

(Bombay XVI of 1932.)

Section 3.—For "officer of Government" substitute "servant of the Crown."

Section 17.—In sub-section (2) for "Government" substitute "the Crown."

The Bombay (District) Tobacco Act, 1933.

(Bombay II of 1933.)

Throughout the Act, except as otherwise specifically provided, and except in the expression "Government Gazette," for "Government" substitute "the Provincial Government."

Section 5.—In sub-section (2) for the words from "appoint" to "assign to him" substitute "assign to any Tobacco Officer."

Section 24.—For "Government" substitute "the Crown."

Section 27.—In sub-section (4) for "upon the table of the Bombay Legislative Council" substitute "before each of the Chambers of the Provincial Legislature"; for the first "of the said Council" substitute "thereof" and for the second "of the said Council" substitute "in which both Chambers concur."

The Bombay Village Panchayats Act, 1933.

(Bombay VI of 1933.)

Throughout the Act, except as otherwise specifically provided, and except in the expressions "Government Gazette" and "Government of India Act," for "Government" substitute "the Provincial Government."

Section 31.—In sub-section (2) omit "fines and" and omit clause (*h*).

Section 37.—In sub-section (2) for "service of Government" substitute "service of the Crown."

Section 40.—For "the Secretary of State for India in Council" and "Government" substitute "the Crown."

Section 85.—Omit "and shall be credited by the village bench to the village fund."

Section 86.—Omit "and the payment so made shall be debited to the village fund."

Section 89.—In sub-section (2) for clause (vii) substitute—

"(vii) any other tax (not being a toll on motor vehicles or trailers, save as provided by section 14 of the Bombay Motor Vehicles Tax Act, 1935) which the Provincial Legislature has, under the Government of India Act, 1935, power to impose in the Province and which has been approved by the district local board and sanctioned by the Provincial Government."

After sub-section (4) insert—

"(5) Until provision to the contrary is made by the Central Legislature, a panchayat which, immediately before the commencement of Part III of the Government of India Act, 1935, was lawfully levying under this section, as then in force, any tax other than the taxes mentioned in sub-section (2) may continue to levy that tax."

Section 108.—In sub-section (3) for "upon the table of the Bombay Legislative Council" substitute "before each of the Chambers of the Provincial Legislature"; for the first "of the said Council" substitute "thereof" and for the second "of the said Council" substitute "in which both Chambers concur."

The City of Karachi Municipal Act, 1933.

(Bombay XVII of 1933.)

Throughout the Act, except as otherwise specifically provided, and except in section 109 and except in the expressions "Government securities" and "Government of India Act," for "Government" substitute "the Provincial Government."

Section 3.—Omit sub-section (1).

Section 5.—In clause (38) for the second "Government" substitute "the Secretary of State in Council, the Central Government or any Provincial Government."

Section 31.—For "Government servant" substitute "servant of the Crown."

Section 33.—For the proviso to sub-section (2) substitute—

"Provided that, if the Chief Officer is a servant of the Crown, the amount of such allowance shall be that to which he may be entitled under the conditions of his service under the Crown relating to foreign service."

Sections 50, 55 and 56.—For "Government" substitute "the Crown."

Section 57.—For the second "Government" substitute "the Crown."

Section 58.—Omit proviso (iv) to sub-section (1).

Section 61.—In sub-section (1) omit from "in the case" to "every other case."

Section 66.—For "Government" substitute "the Central or the Provincial Government" and for "Governor-General in Council" substitute "Provincial Government."

Section 67.—For "by Government" substitute "by the Secretary of State for India in Council, the Central Government or any Provincial Government."

Section 71.—For "Governor-General in Council" substitute "Provincial Government."

Section 76.—Omit clause (*d*) and at the end of clause (*h*) insert "other than fines imposed by any court."

Section 77.—In clause (*c*) for "Government" substitute "any Government" and in clause (*g*) omit "by order of the Commissioner in Sind."

Section 96.—In sub-section (2) for clauses (*d*) and (*e*) substitute—

"(*d*) any other tax which the Provincial Legislature has power under the Government of India Act, 1935, to impose in the Province."

At the end of the section insert—

"(3) Nothing in this section shall authorise the imposition of any tax which the Provincial Legislature has no power to impose in the Province under the Government of India Act, 1935:

Provided that, if the Corporation was immediately before the commencement of Part III of the said Act, lawfully levying any such tax under this section as then in force, it may continue to levy that tax until provision to the contrary is made by the Central Legislature."

Section 108.—For the first, third, fourth and fifth "Government" substitute "the Central or the Provincial Government, or the Crown Representative, as the case may be," and for the second "Government" substitute "the Crown."

Section 111.—For "Government officer" substitute "servant of the Crown."

Section 207.—For "any Act of the Indian or Local Legislature" substitute "any Indian law."

Section 271.—For sub-section (1) substitute—

"(1) The Provincial Government may notify its intention, after consulting the Corporation, to exclude from, or include in, the city any local area defined in the notification:

Provided that no area which is, or is part of, a military cantonment shall be included in the city."

Section 272.—Omit "and with the previous approval of Government"; for "for the benefit of such excluded area" substitute "for the purposes of the Province"; for "the Secretary of State for India in Council" substitute "the Provincial Government" and omit sub-section (2).

Section 274.—For sub-sections (4) and (5) substitute—

"(4) The Provincial Government may thereupon revise, modify or confirm its order "

Omit section 279.

Section 286.—In clause (6) for "service of Government" substitute "service of the Crown".

Section 288.—For "Governor-General in Council" substitute "Provincial Government and of the Federal Railway Authority or the Central Government".

Section 293.—At the end of the section insert—

"(3) In the case of any dispute between the Corporation and a cantonment authority, or the port authority of a major port, any decision of the Provincial Government under this section shall be subject to the concurrence of the Central Government"

The Bombay Livestock Improvement Act, 1933.

(Bombay XXII of 1933.)

Throughout the Act, except as otherwise specifically provided and except in the expressions "Government Gazette" and "Government of India Act", for "Government" substitute "the Provincial Government".

Section 21 —For "Government" substitute "the Crown"

Section 23.—In sub-section (4) for "upon the table of the Bombay Legislative Council" substitute "before each of the Chambers of the Provincial Legislature"; for the first "of the said Council" substitute "thereof" and for the second "of the said Council" substitute "in which both the Chambers concur".

The Bombay Trade Disputes Conciliation Act, 1934.

(Bombay IX of 1934.)

Section 20.—In sub-section (4) for "upon the table of the Bombay Legislative Council" substitute "before each of the Chambers of the Provincial Legislature"; for the first "of the said Council" substitute "thereof" and for the second "of the said Council" substitute "in which both the Chambers concur".

The Bombay Devadasis Protection Act, 1934.

(Bombay X of 1934.)

Section 6.—For the first "Government" substitute "or on behalf of the Crown", and for the second "Government" substitute "the Crown for the purposes of the Province".

Section 7.—For "Government" substitute "the Provincial Government".

In sub-section (3) for "upon the table of the Bombay Legislative Council" substitute "before each of the Chambers of the Provincial Legislature"; for the first "of the said Council" substitute "thereof" and for the second "of the said Council" substitute "in which both the Chambers concur".

The Bombay Nurses, Midwives and Health Visitors Registration Act, 1935.

(Bombay VII of 1935.)

Section 22.—In sub-section (3) for "on the table of the Bombay Legislative Council" substitute "before each of the Chambers of the Provincial Legislature"; and for "of the said Council tabled at" substitute "in which each of the Chambers concur during".

The Mussalman Wakf (Bombay Amendment) Act, 1935.

(Bombay XVIII of 1935.)

Section 5.—In the new section 6J for "Government" substitute "any Government".

In the new section 6L for "Local Legislatures" substitute "Provincial Legislatures".

Section 14.—For "upon the table of the Bombay Legislative Council" substitute "before each of the Chambers of the Provincial Legislature", for the first "of the said Council" substitute "thereof" and for the second "of the said Council" substitute "in which both the Chambers concur".

The Bombay Public Trusts Registration Act, 1935.

(Bombay XXV of 1935.)

Throughout the Act, except in the expression "Government Gazette" and except as otherwise specifically provided, for "Government" substitute "the Provincial Government".

Section 2.—For "the Bombay Legislative Council" substitute "either or both of the Chambers of the Provincial Legislature".

Section 15.—For "Government" substitute "any Government"

Section 27.—In sub-section (4) for "upon the table of the Bombay Legislative Council" substitute "before each of the Chambers of the Provincial Legislature"; for the first "of the said Council" substitute "thereof" and for the second "of the said Council" substitute "carried in both the Chambers".

The Bombay Motor Vehicles Tax Act, 1935.

(Bombay XXXIV of 1935.)

Section 8.—For "Government" substitute "the Provincial Government".

Section 9.—Omit clause (*b*) of sub-section (1) and omit sub-section (4).

Sections 18 and 20.—For "upon the table of the Bombay Legislative Council" substitute "before each of the Chambers of the Provincial Legislature", for the first "of the said Council" substitute "thereof" and for the second "of the said Council" substitute "in which both the Chambers concur".

The Bombay Cotton Control Act, 1935.

(Bombay XXXV of 1935.)

Section 14.—In sub-section (5) for "upon the table of the Bombay Legislative Council" substitute "before each of the Chambers of the Provincial Legislature"; for the first "of the said Council" substitute "thereof" and for the second "of the said Council" substitute "in which both the Chambers concur".

The Cotton Ginning and Pressing Factories (Bombay Amendment) Act, 1936.

(Bombay IV of 1936.)

Section 10.—For "upon the table of the Bombay Legislative Council" substitute "before each of the Chambers of the Provincial Legislature" and for "tabled at" substitute "passed by each of the Chambers during".

The Bombay Opium Smoking Act, 1936.

(Bombay XX of 1936.)

Section 28.—For "Government" substitute "the Provincial Government".

Section 29.—In sub-section (4) for "upon the table of the Bombay Legislative Council" substitute "before each Chamber of the Provincial Legislature", for the first "of the said Council" substitute "thereof" and for the second "of the said Council" substitute "in which both the Chambers concur".

Section 30.—In sub-section (2) for "Government" substitute "the Crown".

The Parsi Public Trusts Registration Act, 1936.

(Bombay XXIII of 1936.)

Throughout the Act except in the expression "Government Gazette", for "Government" substitute "the Provincial Government".

Section 25.—In sub-section (4) for "upon the Table of the Bombay Legislative Council" substitute "before each Chamber of the Provincial Legislature", for the first "of the said Council" substitute "thereof" and for the second "of the said Council" substitute "carried in both the Chambers".

SCHEDULE IV.

BENGAL ACTS.

(Including Eastern Bengal and Assam Acts as in force in Bengal.)

The Bengal Rent Act, 1862.

(Bengal VI of 1862.)

Sections 19 and 20.—For "Government" substitute "the Provincial Government".

The Canals Act, 1864.

(Bengal V of 1864.)

Section 4.—For "Secretary of State for India in Council, or the Government" substitute "Crown".

The Salt Act, 1864.

(Bengal VII of 1864.)

Section 8.—For "Government" substitute "Central or the Provincial Government".

Sections 11 and 12.—For "Lieutenant-Governor of Bengal" substitute "Central Government".

Section 13.—For "Government" substitute "Central Government".

Section 32.—After "Her Majesty" insert "for the purposes of the Central Government".

Omit section 40.

The Bengal Prevention of Inoculation Act, 1865.

(Bengal IV of 1865.)

Section 3.—"the Lieutenant-Governor of Bengal in Council" shall stand unmodified.

The Calcutta Suburban Police Act, 1866.

(Bengal II of 1866.)

Section 4.—For sub-section (1) substitute—

"(1) The Commissioner of Police may, at any time, suspend or dismiss any member of the subordinate ranks of the police force whom he shall think remiss or negligent in the discharge of his duty or otherwise unfit for the same."

Sections 5 and 7.—For "of the police force" substitute "of the subordinate ranks of the police force".

Section 8A.—For the words "from the beginning" to "that of Deputy Commissioner" substitute "a member of the subordinate ranks of the police force".

Section 15.—For the first "Commissioner of Police" and, in the proviso, for "said Commissioner" substitute "Provincial Government"; for "by the Commissioner" substitute "by the Provincial Government" and for the first "said Commissioner" substitute "Commissioner of Police"

Section 15B.—For "Government" substitute "Crown".

Section 38.—For "Government magazine or store" substitute "magazine or store belonging to the Crown"; for "the use of the Government" substitute "the use of any Government" and for "belonging to Government" substitute "belonging to the Crown".

Sections 47A and 48B.—For "of the Government" substitute "of the Provincial Government".

Section 51.—After the definition of "street" insert " 'subordinate ranks' shall mean the ranks below Assistant Commissioner".

The Bengal Legislative Council (Witnesses) Act, 1866.

(Bengal III of 1866.)

This Act shall cease to have effect.

The Calcutta Police Act, 1866.

(Bengal IV of 1866.)

Section 3.—After the definition of "street" insert " 'subordinate ranks' means the ranks below that of Assistant Commissioner".

Section 4.—Omit from "who shall from time to time" to the end of the section.

Section 5.—Omit the second paragraph.

Section 10.—Substitute for subsection (1)—

"(1) The Commissioner of Police may at any time suspend or dismiss any member of the subordinate ranks of the police force whom he shall think remiss or negligent in the discharge of his duty or otherwise unfit for the same."

Section 11.—For "the Police-force" substitute "subordinate ranks of the police force".

Section 13A.—For the words from the beginning to "that of Deputy Commissioner" substitute "A member of the subordinate ranks of the police force".

Section 14.—After "No member" and "every member" insert "of the subordinate ranks".

Section 21.—For the first "Commissioner of Police" and, in the proviso, for "said Commissioner" substitute "Provincial Government"; for "by the Commissioner" substitute "by the Provincial Government" and for the first "said Commissioner" substitute "Commissioner of Police".

Section 29.—For "Government" substitute "Crown".

Section 61.—For "Government magazine or store" substitute "magazine or store belonging to the Crown"; and for "the use of the Government" substitute "the use of any Government"

Section 71.—For "Government" substitute "Crown".

Sections 78A and 101.—For "of the Government" substitute "of the Provincial Government".

The Bengal Embankment Act, 1866.

(Bengal VII of 1866.)

Section 1.—For "officer of Government" substitute "servant of the Crown", but save as aforesaid the section shall stand unmodified.

Section 10.—For "Government" substitute "the Provincial Government".

The Bengal Public Gambling Act, 1867.

(Bengal II of 1867.)

Section 2.—"Lieutenant-Governor of Bengal in Council" shall stand unmodified.

Omit section 14.

Section 16.—"Lieutenant-Governor of Bengal in Council" shall stand unmodified.

The Bengal Ports Act, 1867.

(Bengal III of 1867.)

Section 1.—After "that is to say:—" insert—"the words 'appropriate Government' mean, in relation to a port which is a major port within the meaning of the Indian Ports Act, 1908, the Central Government, and in relation to any other port, the Provincial Government."

"Lieutenant-Governor of Bengal in Council" shall stand unmodified.

Sections 8, 9, 10, 15 and 16.—For "the Lieutenant-Governor of Bengal" and "the said Lieutenant-Governor of Bengal" substitute "the appropriate Government", and omit "in his discretion".

Schedule II.—"Lieutenant-Governor of Bengal in Council" shall stand unmodified.

The Bengal Alluvion (Amendment) Act, 1868.

(Bengal IV of 1868.)

Sections 2, 3 and 4.—For "Government" and "the Government" substitute "the Crown"

Section 5.—For "by Government" substitute "by the Crown"; for "of the Government" substitute "of the Crown" and for "and the Government" substitute "and the Provincial Government".

Section 7.—For "Government" substitute "the Provincial Government".

The Bengal Land Revenue Sales Act, 1868.

(Bengal VII of 1868.)

Section 1.—For "under Government" substitute "under the Crown".

Section 30 shall stand unmodified.

The Bengal Police Act, 1869.

(Bengal VII of 1869.)

Section 3.—For the second "said Lieutenant-Governor" substitute "Crown".

Section 4.—Omit "and the members of such force shall receive such pay" and "subject to the sanction of the Governor-General of India in Council"; and at the end of the section insert—

"The pay and all other conditions of service of the members of such force below the rank of Deputy Superintendent shall, subject to the provisions of the said Act of 1861, be such as may be determined by the Provincial Government".

Section 5.—Omit "in the case of officers of the Indian Police of and above the rank of Assistant Superintendent".

The Landlord and Tenant Procedure Act, 1869.

(Bengal VIII of 1869.)

This Act shall stand unmodified.

The Village Chaukidari Act, 1870.

(Bengal VI of 1870.)

Section 35.—In subsection (1) for "District Magistrate" substitute "Provincial Government".

The Puri Lodging-House Act, 1871.

(Bengal IV of 1871.)

Section 2.—For the words from the beginning to "to appoint" substitute "The Provincial Government may appoint".

Omit section 22.

The Bengal Embankment Act, 1873.

(Bengal VI of 1873.)

Section 26.—For "that Government" substitute "that the Provincial Government" and for "in the Government" substitute "in His Majesty for the purposes of the Province".

The Bengal Survey Act, 1875.

(Bengal V of 1875.)

Section 1.—Omit "for the time being", but save as aforesaid the section shall stand unmodified.

Section 2.—For "Government" substitute "Crown".

Section 3.—For "the Government" substitute "the Provincial Government".

Section 44.—For "Government" substitute "Crown".

Section 58.—For "the Government" substitute "the Provincial Government".

The Bengal Irrigation Act, 1876.

(Bengal III of 1876.)

Section 1.—For "subject to the Lieutenant-Governor of Bengal" substitute "which were on the twenty-ninth March, eighteen hundred and seventy-six, subject to the Lieutenant-Governor of Bengal" and for "said Lieutenant-Governor" substitute "Provincial Government".

Section 3.—For "officers of Government" substitute "servants of the Crown", and in clause (6) omit "in the Regulation Provinces" and "and, in the non-Regulation Provinces, the Court of the Commissioner of a Division".

Sections 11 and 26.—For "the Government" substitute "the Crown".

Section 39.—For "the Government" substitute "the Provincial Government".

Section 48.—For "Government" substitute "the Crown".

Section 73.—For "Government" substitute "Provincial Government".

Section 76.—For "against the Government" substitute "against the Crown" and for "of the Government" substitute "of the Provincial Government".

The Land Registration Act, 1876.

(Bengal VII of 1876.)

Section 3.—In clause (2) for "Government" substitute "the Crown"; omit clause (4); in clause (7) for "by the Government" substitute "by any government"; after "adopted" insert "by the Provincial Government" and for "made by, or under the authority of, the Government" substitute "so made or adopted by the Provincial Government", and for clause (12) substitute—

"(12) 'The Board' means the Board of Revenue for the Province".

Section 10.—For "the Government" substitute "the Crown".

Section 11.—For "by the Government" substitute "by the Crown".

Section 64.—For "of Government" substitute "of the Provincial Government".

Section 85.—For "the Government" substitute "the Provincial Government".

Section 89.—For "Government" and "the Government" substitute "the Crown".

The Bengal Rent Settlement Act, 1879.

(Bengal VIII of 1879.)

Section 1 shall stand unmodified.

Section 3.—For "the Government" substitute "the Crown".

Section 7.—For "the Government" substitute "the Crown" and for "of Government" substitute "of the Provincial Government".

The Court of Wards Act, 1879.

(Bengal IX of 1879.)

Section 10A.—For "the Government" substitute "the Crown".

Section 50.—For "Government of India or of" substitute "Central Government or the Government of" and after "the revenues of India" insert "or of the Federation or of any Province".

The Calcutta Tramways Act, 1880.

(Bengal I of 1880.)

Section 4.—For "by Government" substitute "by the Provincial Government".

The Schedule.—"Act IV of 1876 of the Lieutenant-Governor of Bengal in Council" shall stand unmodified.

The Bengal Vaccination Act, 1880.

(Bengal V of 1880.)

Section 13.—For "Her Majesty or the Government of India" substitute "the Crown".

The Bengal Drainage Act, 1880.

(Bengal VI of 1880.)

Section 1.—Omit "for the time being", but save as aforesaid the section shall stand unmodified.

Section 22.—Omit "subject to the sanction of the Governor-General of India in Council".

Section 47.—For "Secretary of State for India" substitute "Crown".

Section 48.—Omit "in his discretion".

The Cess Act, 1880.

(Bengal IX of 1880.)

Section 6.—After "annual value of lands and" insert "until provision to the contrary is made by the Central Legislature,".

Omit section 8.

Section 9 (as in force outside Bengal).—Omit "fines, penalties".

Section 10.—Omit all the words after "public treasury".

Section 35.—For "officers of Government" substitute "servants of the Crown".

Section 74 shall stand unmodified.

Section 107A. For "Government" substitute "the Crown".

Section 107B.—In clause (*ix*) for "Government" substitute "any Government".

Clause (*x*).—For the first and the second "Government" substitute "the Crown" and for the third and fourth "Government" substitute "any Government".

Sections 107M and 107O.—For "Government" substitute "the Crown".

Section 108 (as in force in Bengal).—Omit "as fines, penalties or otherwise" and after "cesses under this Act" insert "not being fines or penalties and" and for "the Government" substitute "any Government".

Section 108 (as in force outside Bengal).—Omit "fines, penalties" and after "in respect of the local cess" insert "not being sums levied or recovered as fines or penalties".

Section 116.—For "Government" substitute "the Crown" and omit "by a writing signed by him".

Section 117.—For "Government" substitute "Crown".

Section 134.—For "Government" substitute "the Crown".

Section 138.—For "Government" substitute "any Government".

Section 140.—For "Indian Legislature" substitute "Legislature in India".

The Calcutta Burial Board's Act, 1881.

(Bengal V of 1881.)

Section 6.—For "Government" substitute "any Government".
Section 9.—Omit "in his discretion".

The Bengal Embankment Act, 1882.

(Bengal II of 1882.)

Section 3.—For "officers of Government" substitute "servants of the Crown", and in the explanation annexed to the definition of "zamindar" for the first "Government" substitute "Provincial Government" and for the second "Government" substitute "Crown".

Section 4.—For "by Government" substitute "by the Provincial Government"; for "in the Government" substitute "in the Crown for the purposes of the Province", and for "of the Government" substitute "of the Provincial Government".

Sections 5 and 26.—For "Government" substitute "Provincial Government".

Section 31.—For "Government" substitute "the Crown".

Sections 34, 42, 44 and 85.—For "Government" substitute "Provincial Government".

The Bengal Tramways Act, 1883

(Bengal V of 1883.)

Section 2.—At the end insert—

"the term 'appropriate Government' shall mean in relation to a tramway which is, or when completed will be, a Federal Railway, the Federal Railway Authority; and in relation to any other tramway, the Provincial Government; the terms 'Federal Railway' and 'railway' shall have the same meanings as in the Government of India Act, 1935."

Sections 3 to 9 and 13 to 15.—For "Local Government" substitute "appropriate Government".

Section 20.—For "certified by an engineer or other officer, appointed in that behalf by the Local Government, to be fit for such traffic" substitute "certified to be fit for such traffic by an engineer or other officer appointed—

(*a*) if the tramway is a railway, by the Federal Railway Authority, or, if the Central Government so direct, by that Government;

(*b*) if the tramway is not a railway, by the Provincial Government."

Sections 21, 22 and 24.—For "Local Government" substitute "appropriate Government".

Section 26.—At the end of the section insert—

"In relation to a tramway which is a railway, the confirmation required by this section shall, in lieu of being a confirmation of the Provincial Government, be that of the Federal Railway Authority, or, if the Central Government so direct, of the Central Government."

Section 28.—For "and confirmed by the Local Government shall when so confirmed" substitute "shall when duly confirmed", and for "be confirmed by the Local Government" substitute "be so confirmed".

Sections 39, 40 and 41.—For "Local Government" substitute "appropriate Government".

The Darjeeling and Kurseong Municipal (Porters) Act, 1883.

(Bengal V of 1883.)

Omit section 23.

The Bengal Ferries Act, 1885.

(Bengal I of 1885.)

Section 2 shall stand unmodified.

Omit section 20.

In section 34 for "Lieutenant-Governor" substitute "Central Government, where the transport is in connection with the affairs of the Central Government, and the Provincial Government in other cases".

Section 35.—For the words from "and the Lieutenant-Governor" (or, as the case may be, from "and the Local Government") to "accordingly" substitute "and thereupon the ferries shall be managed accordingly".

The Bengal Local Self-Government Act of 1885.

(Bengal III of 1885, as in force in Bengal.)

Section 3.—For "Government" substitute "Crown".

Section 5.—For "of Government" substitute "of the Crown".

Sections 7 and 15.—For "servants of the Government" substitute "servants of the Crown".

Section 18.—For "servant of the Government" substitute "servant of the Crown".

Section 52.—In clause (1) for "and public works cesses" substitute "cess".

Substitute for clause (2)—

"(2) all sums levied within the district under this Act otherwise than as fines or penalties."

Omit clauses (3), (3*a*), (3*b*) and (4).

Section 53.—In clause fourthly for "to the Government" substitute "to the Provincial Government" and in clause eighthly for "the Government of India" substitute "the Central or any Provincial Government".

Section 56.—Omit clause (1).

Section 74.—For "vested in Government" substitute "vested in His Majesty for the purposes of the Province".

Section 81.—For "Government of India" substitute "Central Government or any Provincial Government".

Section 82.—For "Governor General in Council" substitute "Provincial Government".

Section 83.—For the first and the third "the Government" substitute "the Government concerned" and for the second "the Government" substitute "the Crown".

Sections 89 and 90.—For "officer of the Government" substitute "officer of the Crown".

Sections 97 and 98.—For "local Government" substitute "Central Government".

Section 132.—For "vested in the local Government" substitute "vested in His Majesty for the purposes of the Province".

Section 138.—Omit clause (*o*).

After section 138 insert—

"Rules as to census.

138A. The Central Government may, after previous publication, make rules regulating the duties of District Boards in regard to taking a census."

Section 142.—For "Secretary of State for India in Council" substitute "Provincial Government".

The Bihar and Orissa Local Self-Government Act, 1885.

(Bengal III of 1885, as in force outside Bengal.)

Section 3.—For "Government" substitute "Crown".

Section 5.—For "of Government" substitute "of the Crown"; for "officer" substitute "servant"; for "from Government" and "by Government" substitute "from any Government" and "by any Government".

Sections 7 and 10.—For "of Government" substitute "of the Crown".

Section 11.—Omit "with the approval of the Governor General in Council" and for "of Government" substitute "of the Crown".

Sections 16, 19 and 20.—For "of Government" substitute "of the Crown".

Section 33.—For "vested in Government" substitute "vested in the Crown".

Section 47.—For "by Government" substitute "by any Government".

Section 52.—In clause (2) omit "as fines, penalties or otherwise" and at the end of the clause insert "not being fines or penalties".

Omit clauses (3) and (4).

Section 53.—In clause sixthly for "the Government" substitute "the Provincial Government".

In clause tenthly for "Government of India" substitute "Central or any Provincial Government".

Section 56.—Omit clause (1).

Section 74.—For "vested in Government" substitute "vested in the Crown for the purposes of the Province".

Section 81.—For "Government of India" substitute "Central or any Provincial Government".

Section 82.—For "Governor General in Council" substitute "Provincial Government".

Section 83.—For the first and the third "the Government" substitute "the Government concerned" and for the second "the Government" substitute "the Crown".

Sections 89 and 90.—For "officer of the Government" substitute "servant of the Crown".

Sections 97 and 98.—For "local Government" substitute "Central Government".

Section 132.—For "vest in the local Government" substitute "vest the Crown for the purposes of the Province".

Section 138.—Omit clause (*o*).

After section 138 insert—

"138A. The Central Government may make rules regulating the duties of the local authorities mentioned in the last foregoing section in regard to taking a census." Rules as to census.

Section 142.—For "Secretary of State for India in Council" substitute "Provincial Government".

The Calcutta Burial Boards Act, 1889.

(Bengal IV of 1889.)

Section 10.—Omit "in its discretion".

The Calcutta Port Act, 1890.

(Bengal III of 1890.)

Throughout the Act for "Local Government" substitute "Central Government".

Section 13A.—Omit the provisos.

Section 17.—For "any Indian Legislature" substitute "any Legislature in India".

Section 18.—Omit "with the previous sanction of the Governor General in Council".

Section 20.—Omit the proviso to sub-section (1).

Section 22.—For "Secretary of State for India in Council" substitute "Central Government".

Section 23.—Omit "with the previous sanction of the Governor General in Council".

Sections 25, 26 and 27.—For "Secretary of State for India in Council" and "said Secretary of State for India in Council" substitute "Central Government".

Section 31.—For "servants of Government" substitute "servants of the Crown".

Section 37.—For "Secretary of State for India in Council" substitute "Central Government".

Section 39.—For the first "Her Majesty" substitute "His Majesty for the purposes of the Central Government"; for "Secretary of State for India in Council" substitute "Crown" and for the second "Her Majesty" substitute "His Majesty".

Section 55.—For "from the Governor General in Council, or the local Government, on behalf of the Secretary of State for India in Council" substitute "from the Crown".

Section 58.—In sub-section (1) omit "in its discretion"; for "may order" substitute "may cause" and for "for Government" substitute "for the Central Government".

Section 111.—For "Her Majesty or the Secretary of State for India in Council" substitute "the Crown".

Section 119.—"Calcutta Gazette" shall stand unmodified.

Section 122.—For "officer of Government" substitute "officer of the Crown".

Section 124.—For "Secretary of State for India in Council" substitute "Central Government".

Section 134.—In sub-section (2) for "discretion" substitute "power" and after "the same" insert "as it thinks fit".

The Licensed Warehouse and Fire Brigade Act, 1893.

(Bengal I of 1893.)

Section 24.—Omit "and all penalties and fines imposed".

The Land Records Maintenance Act, 1895.

(Bengal III of 1895.)

Section 33.—For "Government" substitute "the Crown".

The Bengal Sanitary and Drainage Act, 1895.

(Bengal VIII of 1895.)

Section 1 shall stand unmodified.

The Protection of Mahommedan Pilgrims Act, 1896.

(Bengal I of 1896.)

Throughout the Act for "Local Government" substitute "Central Government".

The Estates Partition Act, 1897.

(Bengal V of 1897.)

Section 1.—Omit "for the time being", but save as aforesaid the section shall stand unmodified.

Section 3.—For "the territories for the time being under the administration of the Lieutenant-Governor" substitute "the Province".

Section 19.—For "by the Government" substitute "by the Provincial Government".

Section 42.—For sub-section (1) substitute—

"(1) The Provincial Government may direct that in any district an account, to be called the 'Estates Partition Account' shall be kept in which shall be entered all sums levied from the proprietors of estates in such district in respect of partitions of their estates and of all costs of making partitions of estates in such district, whether such costs are costs directed under section 43 to be defrayed by any party to any proceedings in respect of a partition, or not."

In sub-section (2) for "the formation of an Estates Partition Fund" substitute "the keeping of an Estates Partition Account".

In sub-section (3) for "of the said Fund" substitute "shewn in the said Account".

In sub-section (6) for "Estates Partition Fund" substitute "Estates Partition Account".

After sub-section (6) insert—

"(7) A direction in force immediately before the commencement of Part III of the Government of India Act, 1935, that an Estates Partition Fund shall be formed in any district shall, after that date, have effect as if it were a direction that an Estates Partition Account should be kept in that district".

Section 49.—For "Government" substitute "Provincial Government".

Section 70.—For "Government" substitute "Crown".

The Bengal General Clauses Act, 1899.

(Bengal I of 1899.)

Section 3.—Omit clause (5).

At the end of clause (6) insert "or the Government of India Act, 1915, or by the Local Legislature or the Governor of Bengal under the Government of India Act, or by the Provincial Legislature or the Governor of Bengal under the Government of India Act, 1935".

Omit clauses (19) and (24).

Section 6.—For sub-section (1) substitute "Where any Bengal Act is not expressed to come into operation on a particular day, then it shall come into operation, if it is an Act of the Legislature, on the day on which the assent thereto of the Governor, the Governor-General, or His Majesty, as the case may require, is first published in the Official Gazette, and, if it is an Act of the Governor, on the day on which it is first published as an Act in the Official Gazette".

Section 7.—Omit "sub-section (1)".

Section 23.—For "on the day on which it is first published in the Gazette after having received the assent of the Governor-General" substitute "immediately on the passing thereof" and for "after the Act has been published as aforesaid" substitute "after the passing of the Act".

Section 24.—For "Local Government" substitute "Central Government or, as the case may be, the Provincial Government".

After section 30 insert the following section—

"Application to Eastern Bengal and Assam Acts and Ordinances and Regulations under the Government of India Act, 1935.

31. The provisions of this Act shall apply in relation to any Eastern Bengal and Assam Act as in force in Bengal and any Regulation made by the Governor of Bengal under section 92 of the Government of India Act, 1935, as they apply in relation to Bengal Acts other than Acts made by the Governor of Bengal under section 90 of the said Act, and shall apply in relation to any Ordinance promulgated by the Governor under section 88 or section 89 of the said Act, as they apply in relation to Acts made by the Governor under the said section 90."

The Bengal Settled Estates Act, 1904.

(Bengal III of 1904.)

Section 37.—For "by the Government" substitute "by the Provincial Government".

The Bengal Smoke Nuisances Act, 1905.

(Bengal III of 1905.)

Section 10.—Omit "with the previous sanction of the Governor-General in Council and".

Omit section 12.

The Chota Nagpur Tenancy Act, 1908.

(Bengal VI of 1908.)

Section 3.—In clause (iii) omit "and Orissa" and in clause (xiv) for "Government" substitute "Crown".

Section 14.—For "Government" substitute "the Crown".

Section 43.—For the first "the Government" substitute "any Government" and for the second, third and fourth "the Government" substitute "the Crown".

Section 46.—Omit "With the previous sanction of the Governor-General in Council".

Sections 95 and 116.—For "the Government" substitute "the Provincial Government".

Section 171.—For "the Government" substitute "the Crown".

Section 186.—Omit "military and civil" and for "Government" substitute "Crown".

Section 205.—For "Government" substitute "Provincial Government".

Sections 229A and 248.—For "the Government" substitute "the Crown".

The Eastern Bengal and Assam General Clauses Act, 1909.

(E. B. and A. I of 1909.)

This Act shall cease to have effect.

The Bengal Excise Act, 1909.

(Bengal V of 1909.)

Throughout the Act, except as otherwise provided and except in sections 27 and 28, for "excisable article" and "excisable articles" substitute "intoxicant" and "intoxicants".

Section 2.—For clause (7) substitute—

"(7) 'excisable article' means

(*a*) any alcoholic liquor for human consumption; or

(*b*) any intoxicating drug; or

(*c*) any medicinal or toilet preparation containing alcohol".

After clause (7) insert—

"(7a) 'excise duty' and 'countervailing duty' mean any such excise duty or countervailing duty, as the case may be, as is mentioned in item 40 of List II in the Seventh Schedule to the Government of India Act, 1935."

For clauses (11) and (12) substitute—

"(11) 'export' means to take out of Bengal otherwise than across a customs frontier as defined by the Central Government."

"(12) 'import' (except in the phrase "import into British India") means to bring into Bengal otherwise than across a customs frontier as defined by the Central Government."

After clause (12) insert—

"(12a) 'intoxicant' means any liquor or intoxicating drug."

Section 4.—Omit the proviso.

Section 7.—For "Government officer" substitute "servant of the Crown".

Section 8.—At the end of sub-section (3) insert—

"Provided that the powers of the Provincial Government under this sub-section shall, in revenue cases, be exercised by the tribunal to be appointed under section 296(2) of the Government of India Act, 1935 "

Section 11.—Omit the proviso.

Section 17.—For "imposed under section 27" substitute "payable under Chapter V".

Sections 18, 19 and 20.—For "as an intoxicant" substitute "as an intoxicating article".

Section 21.—For "Local Government" substitute "Central Government".

Section 27.—For "A duty" substitute "An excise duty or a countervailing duty, as the case may be," and in sub-section (3) omit from "(ii) any duty" to the end of the section.

After section 29 insert—

"Saving for duties being levied at commencement of Part III of the Government of India Act, 1935.

29A.—(1) Until provision to the contrary is made by the Central Legislature the Provincial Government may continue to levy any duty to which this section applies which it was lawfully levying immediately before the commencement of Part III of the Government of India Act, 1935, under this Chapter as then in force.

(2) The duties to which this section applies are—

(a) any duty on intoxicants which are not excisable articles within the meaning of this Act;

(b) any duty on an excisable article produced outside India and imported into the Province whether across a customs frontier as defined by the Central Government or not.

(3) Nothing in this section shall authorise the levy by the Provincial Government of any duty which, as between goods manufactured or produced in the Province and similar goods not so manufactured or produced, discriminates in favour of the former, or which, in the case of goods manufactured or produced outside the Province, discriminates between goods manufactured or produced in one locality and similar goods manufactured or produced in another locality."

Section 42.—In sub-section (2) after "to such person" insert "by, or by the authority of, the Provincial Government".

Section 86.—For "Government officers" substitute "servants of the Crown".

Section 89.—For "Government" substitute "Provincial Government".

Sections 91 and 92.—For "Secretary of State for India in Council" substitute "Crown".

The Bengal Local Government Act, 1911.

(Bengal III of 1911.)

This Act shall cease to have effect.

The Calcutta Improvement Act, 1911.

(Bengal V of 1911.)

Section 12.—For the proviso to sub-section (2) substitute—

"Provided that, if the Chairman is a servant of the Crown, the amount of such allowance shall be such as he may be entitled to under the conditions of his service under the Crown relating to transfer to foreign service."

Section 31.—For "servant of the Government" substitute "servant of the Crown" and for the proviso substitute—

"Provided that a servant of the Crown employed as an officer or servant of the Board shall not be entitled to leave or leave allowances otherwise than as may be prescribed by the conditions of his service under the Crown relating to transfer to foreign service."

Section 74.—For "servant of the Government" substitute "servant of the Crown" and for the proviso to sub-section (2) substitute—

"Provided that a servant of the Crown employed as an officer or servant of the Tribunal shall not be entitled to leave or leave allowances otherwise than as may be prescribed by the conditions of his service under the Crown relating to transfer to foreign service."

Section 83.—At the end of the section insert—

"(7) After the commencement of Part III of the Government of India Act, 1935, a tax on passengers by railway shall only be leviable under this section if it was levied immediately before that date, and shall only be leviable until provision to the contrary is made by the Central Legislature."

Section 84.—At the end of the section insert—

"(3) After the commencement of Part III of the Government of India Act, 1935, a duty shall only be leviable under this section if it was levied immediately before that date, and shall only be leviable until provision to the contrary is made by the Central Legislature."

Section 89.—Omit the proviso.

Section 101.—For "by the Government" substitute "by the Central or any Provincial Government".

Section 104.—For "Government of India" substitute "Provincial Government".

Section 122.—For "the Government" substitute "any Government".

Section 124.—Omit "fines" and "and proceeds of confiscations" and for "175" substitute "162".

Section 146.—For "Government servant" substitute "servant of the Crown" and for "prescribed in any general or special orders of the Government for regulating the transfer of Government servants to foreign service" substitute "required, by the conditions of his service under the Crown, to be paid by him or on his behalf".

Omit Section 175.

The Jalpaiguri Labour Act, 1912.

(E. B. and A. II of 1912, as in force in Bengal.)

Section 2.—Omit "and Assam" and "with the previous sanction of the Governor-General in Council".

The Bengal Public Demands Recovery Act, 1913.

(Bengal III of 1913.)

Section 3.—For "Secretary of State for India in Council or other person" substitute "Government or person".

Section 22.—For "Government" substitute "Crown".

Section 48.—For "Government officer" substitute "officer of the Crown".

Schedule I.—For "a Government officer" substitute "an officer of the Crown".

Schedule II.—In rule 49 for "Secretary of State for India in Council" substitute "Central Government or the Provincial Government".

The Doveton Trust Act, 1914.

(Bengal III of 1914.)

Section 4.—For "the Government" substitute "the Crown".

Section 5.—For "the Government" substitute "the Provincial Government".

Section 6.—For the first "the Government" substitute "the Crown" and for the second and third "the Government" substitute "the Provincial Government".

The Chittagong Ports Act, 1914.

(Bengal V of 1914.)

Section 4.—In clause (11) for "Local Government" substitute "Central Government".

Section 12.—For "any Indian Legislature" substitute "any Legislature in India".

Section 25.—For "Government" substitute "Crown".

Section 35.—For "Government officials" substitute "persons in the service of the Crown".

Section 47.—At the end of the section insert "or, after the establishment of the Federal Railway Authority, by that Authority".

Section 60.—For "to His Majesty or to the Secretary of State for India in Council" substitute "to the Crown".

Section 76.—For "Secretary of State for India in Council" substitute "Crown".

Section 78.—After "Secretary of State for India in Council" insert "or any government".

Sections 80 and 81.—For "the Secretary of State for India in Council" substitute "any government".

Section 84.—For "to the Government" substitute "to any Government", and for "by the Government" substitute "by that Government".

Section 103.—For "any Indian Legislature" substitute "any Legislature in India".

The Bengal Medical Act, 1914.

(Bengal VI of 1914.)

Section 30.—For "Governor-General of India in Council" substitute "Central Legislature".

After section 33 insert—

"34. This Act has effect subject to the provisions of Chapter III of Part V of the Government of India Act, 1935". **Saving for provisions of the Government of India Act, 1935.**

The Schedule.—In clause 3, after "India" insert "or Burma", for "by the Government" substitute "by the Government concerned", and for "maintained by Government" substitute "maintained by any Government".

The Bengal (Aliens) Disqualification Act, 1918.

(Bengal III of 1918.)

Omit section 2.

The Serampore College Act, 1918.

(Bengal IV of 1918.)

Section 13.—For "the Government as defined in section 2(*b*) of the Indian Universities Act, 1904, in relation to the University of Calcutta" substitute "the Provincial Government".

The Calcutta Hackney Carriage Act, 1919.

(Bengal I of 1919.)

Omit section 82.

Section 84.—In sub-section (2) for "61 and 82" substitute "and 61" and omit from the words "and for the words" to the end.

The Bengal Village Self-Government Act, 1919.

(Bengal V of 1919.)

Section 1.—Omit "without the sanction of the Governor-General in Council, previously obtained".

Section 20.—In sub-section (1), for "District Magistrate" substitute "Provincial Government".

Section 46.—Substitute for sub-section (1)—

"(1) All sums realised under sections 41 and 42 and all other receipts of the Union Board, including any donation or contribution from a private person, but not including any sum realised as a fine or as a fee, shall be paid into a fund to be called 'The Union Fund' the accounts of which shall be kept in accordance with rules under section 101.

(1*a*) All sums realised as fines or fees under this Act and all sums received by the Union Bench or Union Court shall form part of the revenues of the Province."

Section 72.—Omit sub-section (4).

Section 75.—For "against Government" substitute "against the Crown".

Section 90.—In sub-section (1) omit "shall, on receipt, be credited to the Union Fund and" and "and the fee already paid by the plaintiff shall, notwithstanding anything contained in section 46, be paid from the Union Fund to the local Government".

Section 91.—In sub-section (3) omit from "but any amount" to the end of the section.

The Bengal Food Adulteration Act, 1919.

(Bengal VI of 1919.)

Omit section 18.

Section 20.—Omit clause (*g*) of sub-section (2).

The Bengal Alluvial Land Act, 1920.

(Bengal V of 1920.)

Section 4A.—For "by Government" substitute "by any Government" and for "include Government" substitute "include that Government".

Section 5.—In sub-section (7) for "Government" substitute "the Crown".

The Bengal Agricultural and Sanitary Improvement Act, 1920.

(Bengal VI of 1920.)

Section 2.—For "Government" substitute, in sub-section (4), "Crown" and in sub-section (6), "any Government".

The Deputy President's Emoluments Act, 1921.

(Bengal I of 1921.)

This Act shall cease to have effect.

The Bengal Children Act, 1922.

(Bengal II of 1922.)

Section 45.—For "the Government" substitute "any Government".

Section 48.—Omit sub-section (3).

The Bengal Stamp (Amendment) Act, 1922.

(Bengal III of 1922.)

Schedule IA.—In item 57 for "officers of Government" substitute "servants of the Crown".

The Bengal Amusements Tax Act, 1922.

(Bengal V of 1922.)

Throughout the Act for "Government of Bengal" substitute "Provincial Government".

Section 1.—Omit the proviso to sub-section (4).

Sections 15 and 18.—For "of Government" substitute "of the Provincial Government".

The Calcutta Municipal Act, 1923.

(Bengal III of 1923.)

Section 29.—For "the Government" substitute "any government".

Section 55.—For "servant of the Government" substitute "servant of the Crown" and for "for the time being be levied by the Government" substitute "be required, under the conditions of his service under the Crown, to be paid by him or on his behalf".

Section 56.—Omit "under any general or special orders of the Government of India for the time being in force" and for "under Government" substitute "under the Crown in the Province".

Section 81.—In sub-section (1) after "this Act" insert "other than fines levied by magistrates".

Section 97.—In sub-section (1) for "to the Government" substitute "to the Crown", and omit proviso (iv).

Section 101.—Omit "or (in the case of a loan raised out of India) the Government of India".

Sections 106, 110, and 111.—For "Government of India" substitute "Provincial Government".

Section 112.—For "by the Government" substitute "by the Central or any Provincial Government".

Section 114.—For "Government of India" substitute "Provincial Government".

Section 118.—For "the Government" substitute "the Crown".

Section 126.—In sub-section (2) for "property of Government" substitute "property of the Crown", and after "if" insert "they were so exempted immediately before the commencement of Part III of the Government of India Act, 1935, or if".

Section 165.—For "the Government" substitute "the Crown" and "the Governor of Bengal" shall stand unmodified.

Section 181.—In sub-section (1) for "Local Government" substitute "Central Government".

In sub-section (3) for "tax" substitute "cess".

Section 183.—For "the Government" substitute "the Crown"; and "the Governor of Bengal" shall stand unmodified.

Section 295.—For "the property and kept under the control of the Government or" substitute "the property of the Crown kept under the control of any government, or the property and kept under the control of".

Section 378.—For "Governor-General in Council" substitute "Federal Railway Authority and the Provincial Government".

Sections 463 and 464.—For "Local Government" substitute "Central Government".

Section 532.—Omit "to the credit of which any fine imposed by him shall be payable".

Section 543.—For "the Bengal Legislative Council" substitute "both Chambers of the Bengal Legislature".

Section 547.—For "Government" substitute "Crown".

The Bengal Aerial Ropeways Act, 1923.

(Bengal VII of 1923.)

Section 5.—For "from Government" substitute "from the Crown".

Section 6.—In clause (vii) of sub-section (4) for the words from "except such railways" to the end of the clause substitute "except railways and tramways not wholly within a municipal area, and, with the previous sanction of the Federal Railway Authority or the Central Government, over such railways and tramways"

Section 29.—For "the Government" substitute "the Provincial Government".

The St. Thomas' School Act, 1923.

(Bengal XII of 1923.)

Throughout the Act, save as otherwise expressly provided, "Governor" shall stand unmodified.

Section 2.—In clause (*g*) of subsection (1) for sub-clauses (i) and (ii), substitute—

"(i) three persons to be nominated by the Provincial Government."

The Bengal Criminal Law Amendment Act, 1925.

(Governor's Act.)

Throughout the Act for "Local Government" substitute "appropriate Government".

Section 2.—At the end insert—

"(2) In this Act 'the appropriate Government' means the Central Government in relation to any of the matters enumerated in List I in the Seventh Schedule to the Government of India Act, 1935, and the Provincial Government in relation to other matters."

Section 4.—For "sub-section (3) of section 101 of the Government of India Act" substitute "section 220 of the Government of India Act, 1935".

The President's Salary Act, 1925.

(Bengal II of 1925.)

This Act shall cease to have effect.

The Bengal Highways Act, 1925.

(Bengal III of 1925.)

Section 2.—After "vested in" insert "the Crown".

The Howrah Bridge Act, 1926.

(Bengal IV of 1926.)

Section 6.—Omit the proviso to sub-section (1).

The Calcutta Vehicles Act, 1927.

(Bengal I of 1927.)

Section 17.—Omit "in its discretion".

The Bengal Borstal Schools Act, 1928.

(Bengal I of 1928.)

Section 12.—For "officer of Government" substitute "servant of the Crown" and for "report to Government" substitute "report to the Provincial Government".

The Bengal Criminal Law Amendment Act, 1930.

(Bengal VI of 1930.)

Throughout the Act for "officer of Government" substitute "servant of the Crown".

The Bengal (Rural) Primary Education Act, 1930.

(Bengal VII of 1930.)

Section 1.—Omit "without the previous sanction of the Governor-General in Council".

Section 13.—For "Government officers" substitute "servants of the Crown".

Section 37.—At the end of clause (vii) of subsection (1) insert "other than fines and penalties levied by Magistrates".

Section 49.—For "Government servant" substitute "servant of the Crown".

The Bengal State Aid to Industries Act, 1931.

(Bengal III of 1931.)

Section 3.—For "Government servants" substitute "servants of the Crown"; for "Council" substitute "Assembly", and omit "non-official".

Omit section 18.

Section 19.—For "property of the Local Government" substitute "property vested in His Majesty for the purposes of the Province".

Omit section 20.

Section 32.—Omit clauses (*c*) and (*d*) of subsection (2).

The Bengal Motor Vehicles Tax Act, 1932.

(Bengal I of 1932.)

Omit section 11.

The Bengal Suppression of Terrorist Outrages Act, 1932.

(Bengal XII of 1932.)

Section 2.—Omit "and" at the end of clause (*b*) and at the end of clause (*c*) insert—"and

(*d*) 'the appropriate Government' means, in relation to any of the matters enumerated in List I in the Seventh Schedule to the Government of India Act, 1935, the Central Government, and in relation to any other matter, the Provincial Government."

Section 3.—For "officer of Government" substitute "servant of the Crown"

Sections 4 and 5.—For "disposal of Government" substitute "disposal of the Provincial Government".

Sections 6 and 11.—For "of Government" substitute "of the Central or the Provincial Government".

Section 18.—Omit "subject to the control of the Governor-General in Council".

Throughout Chapters II and III for "Local Government" substitute "appropriate Government".

The Bengal Municipal Act, 1932.

(Bengal XV of 1932.)

Section 6.—Omit "without the consent of the Governor-General in Council, previously obtained".

Section 70.—In subsection (1) for "Government" substitute "any Government" and in subsection (2) for "the rules of the Government Civil Pension and Leave Codes" substitute "the conditions of service under which the officer is serving the Crown".

Section 76.—For "Government officers" substitute "servants of the Crown" and at the end of the section insert—

"Provided that where the services of any servant of the Crown are lent or transferred by any Government other than the Provincial Government, the rules to be made under clause (*b*) of this section shall be made by that Government."

Section 88.—At the end of subsection (1) insert—

"Provided that if the dispute is between the Commissioners and a Cantonment Authority or the Port Authority of a major port, the decision of the Provincial Government shall be subject to the concurrence of the Central Government."

At the end of subsection (3) insert—

"Provided that any rules regulating the relations to be observed between the Commissioners of Municipalities and Cantonment Authorities or the Port Authorities of major ports, shall have no effect until they are approved by the Central Government."

Section 95.—In subsection (1) for "by Government" substitute "by the Central or the Provincial Government".

Section 98.—In subsection (4) for "Government" substitute "Provincial Government".

Section 104.—Omit "in its discretion".

Section 105.—Omit clause (*b*).

Section 111.—In subsection (1) omit "or fines".

Section 118.—For "officer of Government" substitute "servant of the Crown".

Section 120.—For "the benefit of the inhabitants of the local areas" substitute "for the purposes of the Province" and for "Secretary of State for India in Council" substitute "Provincial Government". In subsection (2) after "His Majesty" insert "for the purposes of the Province", and omit subsection (3).

Section 145.—Omit "in its discretion".

Section 168.—For "belonging to Government" substitute "belonging to the Crown" and for "by the Government" substitute "by the Central or any Provincial Government".

Section 183.—For "Government" substitute "Crown".

Section 284.—At the end of the section insert—

"Provided that, if the dispute is between the Commissioners and a Cantonment Authority or the Port Authority of a major port, the orders of the Provincial Government shall be subject to the concurrence of the Central Government."

Section 285.—At the end of the section insert—

"(4) No action shall be taken under the foregoing provisions of this section in relation to a Cantonment Authority or the Port Authority of a major port without the previous approval of the Central Government".

Section 471.—For "by the Government" substitute "by the Central or the Provincial Government".

Section 504.—For "with the Government" substitute "with any Government".

Section 554.—For "vest in the Government" substitute "vest in His Majesty for the purposes of the Province".

The Bengal Public Security Act, 1932.

(Bengal XXII of 1932.)

Throughout the Act for "Local Government" substitute "appropriate Government".

Section 2.—Omit "and" at the end of clause (2).

In clause (3) for "the Governor-General in Council" substitute "the Central or the Provincial Government".

After clause (3) insert—"and

(4) 'the appropriate Government' means, in relation to any of the matters enumerated in List I in the Seventh Schedule to the Government of India Act, 1935, the Central Government, and in relation to any other matter the Provincial Government".

Section 3.—For "officer of Government" substitute "servant of the Crown".

Section 5.—For "of Government" substitute "of any Government".

The Opium (Bengal Amendment) Act, 1933.

(Bengal V of 1933.)

Section 9.—For "the Government" substitute "the Federal Railway Authority or any Government".

The Bengal Suppression of Immoral Traffic Act, 1933.

(Bengal VI of 1933.)

Section 20.—For "the Government" substitute "any Government".

The Bengal Moneylenders Act, 1933.

(Bengal VII of 1933.)

Section 10.—At the end insert—

"(3) The powers conferred by this section on the Provincial Government shall, in relation to banking business carried on by any corporation, be powers of the Central Government."

The Bengal Smuggling of Arms Act, 1934.

(Bengal VI of 1934.)

Throughout the Act for "Local Government" substitute "Central Government".

The Bengal Waterways Act, 1934.

(Bengal XII of 1934.)

Sections 5, 8 and 10.—For "Council" substitute "Assembly".

Section 14.—For sub-section (2) substitute—

"(2) The word 'pay', as used in this section, does not include any contribution payable on account of a Chairman who is a servant of the Crown under the rules regulating his transfer to foreign service".

Section 17.—For "a Government officer" substitute "a servant of the Crown" and for "under any general or special orders of the Government for regulating the transfer of Government servants to foreign service" substitute "under the conditions of his sevice under the Crown regulating his transfer to foreign service".

Section 21.—For "Council" substitute "Assembly".

Section 25.—For "servant of the Government" and "Government servant" substitute "servant of the Crown" and for "any general or special orders of the Government for regulating the transfer of Government servants to foreign service" substitute "the conditions of his service under the Crown regulating his transfer to foreign service".

Section 35.—For "Govenment servant" substitute "servant of the Crown".

Section 82.—Omit the proviso.

Section 93.—For "by the Government" substitute "by the Central or the Provincial Government".

Section 99.—For "Local Government" substitute "Central Government".

Section 116.—Omit "fines".

Section 136.—For "Government servant" substitute "servant of the Crown" and for "prescribed in any general or special orders of the Government for regulating the transfer of Government servants to foreign service" substitute "required, by the conditions of his service under the Crown to be made by him or on his behalf".

Section 153.—Omit "fines and".

Section 154.—For "the Government" substitute "the Crown for the purposes of the Province".

The Bengal Wakf Act, 1934.

(Bengal XIII of 1934.)

Sections 8 and 10.—For "Council" substitute "Assembly".

Sections 59 and 70.—For "the Government" substitute "the Crown".

The Bengal Workmen's Protection Act, 1935.

(Bengal IV of 1935.)

Section 2.—Omit the proviso.

The Court Fees (Bengal Amendment) Act, 1935.

(Bengal VII of 1935.)

Section 8.—In section 8 (*f*) for "by Government" substitute "by the Provincial Government".

Section 13.—For "by Government servants or of" substitute "servants of the Crown or".

The Albert Victor Leper Hospital Act, 1935.

(Bengal IX of 1935.)

Section 12.—For "in the service of Government" substitute "in the service of the Crown"; omit "charges prescribed or authorised by any rules for the time being in force under the provisions of section 96-B of the Government of India Act regarding"; after "leave allowances" insert "required, by the conditions of his service under the Crown, to be paid by him or on his behalf"; for "by Government" substitute "by the Crown"; for "and charges" substitute "and contributions"; and for "by the Local Government" substitute "by the Government concerned".

Sections 15 and 16.—For "the Local Government on behalf of His Majesty" substitute "the Crown for the purposes of the Province".

Section 17.—For "Government servants" substitute "servants of the Crown".

The Bengal Electricity Duty Act, 1935.

(Bengal X of 1935.)

Section 3.—For "by Government" substitute "by any Government".

The Second Schedule:—For "The Government" substitute "Any Government".

The Bengal Development Act, 1935.

(Bengal XVI of 1935.)

Section 2.—In clause (5) for "constructed by the Government, before or after the commencement of this Act, or proposed to be constructed by the Government" substitute "constructed, before the commencement of Part III of the Government of India Act, 1935, by any Government, or constructed or proposed to be constructed after that date by the Provincial Government".

Sections 6 and 12.—For "Council" substitute "Assembly".

Section 27.—For "Government" substitute "Provincial Government".

The Bengal Court of Wards (Amendment) Act, 1936.

(Bengal VI of 1936.)

Section 12.—For "cesses due to Government" substitute "cesses due to the Crown" and for "other Government dues including the principal and interest of loans advanced by Government, if any," substitute "other sums due to the Crown, including the principal of and interest on any loans advanced by any Government".

The Bengal Water-Hyacinth Act, 1936.

(Bengal XIII of 1936.)

Section 6.—For "Government" substitute "any Government".

SCHEDULE V.

UNITED PROVINCES ACTS.

The United Provinces Village Sanitation Act, 1892.

(U. P. II of 1892.)

Section 1.—In sub-section (2) omit "for the time being", but in other respects the section shall stand unmodified.

The United Provinces Village Courts Act, 1892.

(U. P. III of 1892.)

Throughout the Act for "the Government" substitute "the Provincial Government".

Section 1.—In sub-section (2) omit "for the time being", but in other respects the section shall stand unmodified.

Section 9.—For "Government" substitute "the Crown".

Section 51.—Omit "military and civil" and for "of Government" substitute "of the Crown".

The United Provinces Honorary Munsifs Act, 1896.

(U. P. II of 1896.)

Section 1.—Omit "for the time being", but in other respects the section shall stand unmodified.

The United Provinces Famine Loans Recovery Act, 1897.

(U. P. I of 1897.)

Section 1.—Omit "for the time being", but in other respects the section shall stand unmodified.

An Act to provide for the collection in certain cases of municipal and other taxes by Railway Administrations.

(U. P. II of 1899.)

Section 1.—Omit "for the time being", but in other respects the section shall stand unmodified.

Section 3.—For "Local Government" substitute "Government or Governments concerned" and at the end of the section insert—

"For the purposes of this section the Central Government shall be deemed to be a Government concerned, if either of the parties to the agreement is a Cantonment Committee or the railway administration of a Federal Railway or of an Indian State Railway, and the Provincial Government shall be deemed to be a Government concerned, if either of the parties to the agreement is a Municipal Board or the railway administration of a minor railway."

The United Provinces Land Revenue Act, 1901.

(U. P. III of 1901.)

Section 1.—Omit "for the time being", but in other respects the section shall stand unmodified.

Section 6.—Omit "and may remove".

Section 11.—In sub-section (1) omit "with the previous sanction of the Governor-General in Council".

Omit section 16.

Section 17.—Omit from "and may suspend" to the end of the section.

Omit section 22.

For section 23 substitute—

"Appointment of Patwaris.

23. The Provincial Government shall appoint a Patwari to each circle".

Omit sections 24 and 26.

Section 27.—For "Government" substitute "the Crown".

Section 58.—For "Government" substitute "Crown".

Section 62.—In sub-section (2) after the first "Legislative Council" insert "and every member of the Legislative Assembly", and after the second "Legislative Council" insert "or, as the case may be, of the Legislative Assembly".

In sub-section (3) after the first "Legislative Council" insert "and the Legislative Assembly", and after the second "Legislative Council" insert "or the Legislative Assembly".

Section 63B.—For "Government" substitute "Crown".

Sections 80 and 82.—For "Government" substitute "the Crown".

Section 94.—Omit the first proviso.

Section 95A.—After "Legislative Council" insert "and the Legislative Assembly", and after "the Council" insert "or the Assembly".

Section 152.—For "Government" substitute "the Crown".

Section 165.—For "Government" substitute "the Crown".

Section 183.—For "Government" substitute "Provincial Government".

Sections 208 and 222.—For "Government" substitute "the Crown".

Section 227.—Omit clause (1).

Section 233.—For "Government" substitute "the Crown".

The Bundelkhand Encumbered Estates Act, 1903.

(U. P. I of 1903.)

Section 2.—For "Government" substitute "the Crown".

Section 4.—Omit sub-section (2).

Sections 20 and 24.—For "by Government" substitute "by the Provincial Government".

Section 27.—After the first "His Majesty" insert "for the purposes of the Province" and for "Government" substitute "Crown".

The United Provinces General Clauses Act, 1904.

(U. P. I of 1904.)

Section 4.—Omit clauses (19), (21) and (26).

At the end of clause (46) insert "or the Indian Councils Acts, 1861 to 1909, or the Government of India Act, 1915, or by the local Legislature or the Governor of the United Provinces under the Government of India Act, or by the Provincial Legislature or the Governor of the United Provinces under the Government of India Act, 1935."

Section 5.—In sub-section (1) for the words from "on the day" to the end, substitute "if it is an Act of the Legislature, on the day on which the assent thereto of the Governor, the Governor-General or His Majesty, as the case may require, is first published in the official Gazette and if it is an Act of the Governor, on the day on which it is first published as an Act in the official Gazette".

Section 23.—For "Local Government" substitute "Central Government or, as the case may be, the Provincial Government".

Section 29.—Omit "of Agra and Oudh" and for the words from "all references to the Lieutenant-Governor of the North-Western Provinces" to the end of the section substitute "and all references to the Lieutenant-Governor of the North-Western Provinces, or the Chief Commissioner of Oudh or the Lieutenant-Governor of the North-Western Provinces and Oudh in Council shall be construed as referring to the Provincial Government of the United Provinces."

After section 29 insert—

"30. The provisions of this Act shall apply—

Application to ordinances and regulations under the Government of India Act, 1935.

(*a*) in relation to any regulation made by the Governor of the United Provinces under section 92 of the Government of India Act, 1935, as they apply in relation to Acts made by the Provincial Legislature of the United Provinces; and

(*b*) in relation to any ordinance promulgated by the Governor under section 88 or section 89 of the said Act, as they apply in relation to Acts made under that Act by the Governor."

The United Provinces Excise Act, 1910.

(U. P. IV of 1910.)

Throughout the Act, except in sections 28 and 29, for "excisable article" and "excisable articles" substitute "intoxicant" and "intoxicants".

Section 3.—After clause (3) insert—

"(3*a*) 'excise duty' and 'countervailing duty' mean any such excise duty or countervailing duty, as the case may be, as is mentioned in Item 40 of List II in the Seventh Schedule to the Government of India Act, 1935."

Omit clauses (14) and (15).

For clauses (17) and (18) substitute—

"(17) 'import' (except in the phrase 'import into British India') means to bring into the United Provinces otherwise than across a customs frontier as defined by the Central Government.

(18) 'expert' means to take out of the United Provinces otherwise than across a customs frontier as defined by the Central Government."

After clause (22) insert—

"(22*a*) 'excisable article' means—

(*a*) any alcoholic liquor for human consumption; or

(*b*) any intoxicating drug; or

(*c*) any medicinal or toilet preparation containing alcohol".

Section 4.—Omit the proviso to sub-section (2).

Section 14.—Omit the proviso.

Section 19.—For "imposed under section 28" substitute "payable under Chapter V".

Section 25.—For "Local Government" substitute "Central Government".

Section 28.—For "A duty" substitute "An excise duty or a countervailing duty, as the case may be" and omit proviso (ii).

After section 30 insert—

"Saving for duties being levied at commencement of Part III of the Government of India Act, 1935

30A.—(1) Until provision to the contrary is made by the Central Legislature, the Provincial Government may continue to levy any duty to which this section applies which it was lawfully levying immediately before the commencement of Part III of the Government of India Act, 1935, under this Chapter as then in force.

(2) The duties to which this section applies are:—

(*a*) any duty on intoxicants which are not excisable articles within the meaning of this Act; and

(*b*) any duty on an excisable article produced outside India and imported into the United Provinces whether across a customs frontier as defined by the Central Government or not.

(3) Nothing in this section shall authorise the levy by the Provincial Government of any duty which, as between goods manufactured or produced in the Province and similar goods not so manufactured or produced, discriminates in favour of the former, or which, in the case of goods manufactured or produced outside the Province, discriminates between goods manufactured or produced in one locality and similar goods manufactured or produced in another locality."

Section 34.—In sub-section (2) after "to such person" insert "by, or by the authority of the Provincial Government".

Section 35.—For "Government" substitute "the Provincial Government".

Section 39.—For "Government" substitute "the Crown".

Section 50.—For "excisable" substitute "intoxicant".

Section 78.—For "Secretary of State for India in Council" substitute "Crown".

The United Provinces Court of Wards Act, 1912.

(U. P. IV of 1912.)

Section 1.—Omit "for the time being", but in other respects the section shall stand unmodified.

Section 4.—In clause (*a*) of sub-section (1) for "the Governor" substitute "the Governor, exercising his individual judgment".

For clause (*d*) of sub-section (1) substitute—

"(*d*) two members of the United Provinces Legislative Assembly elected by that Assembly, and".

In sub-section (2) for "The Governor" substitute "The Governor, exercising his individual judgment".

Section 6A.—In sub-section (6) (*a*) for "the Governor" substitute "the Governor, exercising his individual judgment" and for "at the discretion of" substitute "by".

In sub-section (6) (*b*)—For "are members of" substitute "are elected by" and for "Legislative Council" substitute "Legislative Assembly".

Section 18.—For "Government" substitute "Crown".

Section 36.—After "revenues of India" insert "or the revenues of the Federation or of any Province" and after "Secretary of State for India in Council" insert "or by the Central Government".

Section 53.—For "Government" substitute "the Crown".

The United Provinces Prevention of Adulteration Act, 1912.

(U. P. VI of 1912.)

Section 16.—For "the Government" substitute "the Provincial Government".

Section 19.—Omit "the amount of all fines realised and", "credited to and" and the words from "This fine" to the end of the section.

The United Provinces Local Rates Act, 1914.

(U. P. I of 1914.)

Section 1.—Omit "for the time being", but save as aforesaid the section shall stand unmodified.

The United Provinces Town Areas Act, 1914.

(U. P. II of 1914.)

Section 2.—In clause (9) omit "provincial".

Section 7.—For "Government service" and "Government servant" substitute "service of the Crown" and "servant of the Crown".

Section 7B.—Omit "in the name of the Secretary of State in Council".

Section 22.—Omit clause (*b*).

Section 23.—For "the Government" substitute "any Government".

Section 39.—For "officer of Government" substitute "servant of the Crown".

The United Provinces Municipalities Act, 1916.

(U. P. II of 1916.)

Section 1.—Omit "for the time being", but save as aforesaid the section shall stand unmodified.

Section 2.—In clause (16) omit "provincial".

Section 3.—In sub-section (2) for the words from "where the notification" to the end of the section substitute "notwithstanding anything in this section, no area which is, or is part of, a cantonment, shall be declared to be a municipality or be included in a municipality under this section".

Section 9.—For "Government servant" substitute "servant of the Crown".

Section 14.—In the second proviso to sub-section (2) for "Legislative Council" substitute "Legislative Assembly".

Section 16.—For "Government service" substitute "the service of the Crown".

Section 31.—After "vest in His Majesty" insert "for the purposes of the Province".

Section 40.—In clause (*f*) of sub-section (1) for "Secretary of State" substitute "Provincial Government".

Section 43.—For "Government servant" and "servant of Government" substitute "servant of the Crown".

Section 44.—In sub-section (2) for "the Government" substitute "the Provincial Government".

Section 78.—For "the Governor-General in Council" substitute "the Government concerned".

Section 80.—For "Government" substitute "that Government".

Section 81.—Omit "in the name of the Secretary of State in Council".

Section 82.—For "the Government" substitute "the Provincial Government".

Section 102.—For "control of Government" substitute "control of the Provincial Government".

Section 114.—Omit clause (*b*) of sub-section (1).

Section 120.—In sub-section (3) for "by Government" substitute "by the Provincial Government".

Sections 121, 122 and 123.—After "His Majesty" insert "for the purposes of the Province" and for "the Secretary of State in Council" substitute "the Provincial Government".

Section 128.—In sub-section (1) omit clause (xiii-A), and for clause (xiv) substitute—

"(xiv) any other tax which the Provincial Legislature has power to impose in the Province under the Government of India Act, 1935;"

and at the end of the section insert—

"(3) Nothing in this section shall authorise the imposition of any tax which the Provincial Legislature has no power to impose in the Province under the Government of India Act, 1935:

Provided that a board which immediately before the commencement of Part III of the said Act was lawfully levying any such tax under this section as then in force, may continue to levy that tax until provision to the contrary is made by the Central Legislature."

Section 133.—Omit subsection (3).

Section 134.—Omit from "or when" to "as the case may be".

Sections 143 and 144.—For "of Government" substitute "of the Crown".

Section 149.—For "Secretary of State in Council" substitute "Crown".

Section 297.—For "government servant" substitute "person in the service of the Crown".

The United Provinces Public Gambling (Amendment) Act, 1917.

(U. P. I of 1917.)

Section 1.—Omit "for the time being", but save as aforesaid the section shall stand unmodified.

The United Provinces Medical Act, 1917.

(U. P. III of 1917.)

Section 1.—Omit "for the time being", but save as aforesaid the section shall stand unmodified.

Section 4.—For "service of Government" substitute "service of the Crown".

After section 36 insert—

"37. This Act has effect subject to the provisions of Chapter III of Part V of the Government of India Act, 1935." Saving for provisions of the Government of India Act, 1935.

The Schedule.—After "India" insert "or Burma", and after "the Government" insert "concerned".

The Oudh Settled Estates Act, 1917.

(U. P. V of 1917.)

Sections 4, 6 and 8.—Omit "in its discretion".

Section 16.—For "Secretary of State" substitute "Crown".

The Oudh Amanati Notes Act, 1918.

(U. P. III of 1918.)

Section 2.—For "by Government" substitute "by the Central Government" and for "Local Government" substitute "Central Government".

The Co-operative Societies (Amendment) Act, 1919.

(U. P. III of 1919.)

Section 1.—Omit "for the time being", but save as aforesaid the section shall stand unmodified.

The United Provinces Public Gambling (Amendment) Act, 1919.

(U. P. V of 1919.)

Section 1.—Omit "for the time being", but save as aforesaid the section shall stand unmodified.

The United Provinces Primary Education Act, 1919.

(U. P. VII of 1919.)

Omit section 16.

The United Provinces Town Improvement Act, 1919.

(U. P. VIII of 1919.)

Section 1.—In subsection (2) omit "for the time being", but save as aforesaid that subsection shall stand unmodified.

Section 4.—In subsection (6) for "Government servant" substitute "person in the service of the Crown" and for "service of Government" substitute "service of the Crown".

Section 72.—In clause (*h*) of subsection (1) for "servant of the Government" and "Government servant" substitute "person in the service of the Crown" and for "in any general or special orders of the Government" substitute "by the conditions of his service under the Crown".

Omit section 91.

Section 93.—For "Government servant" substitute "person in the service of the Crown" and for "prescribed in any general or special orders of the Government" substitute "required, by the conditions of his service under the Crown, to be paid by him or on his behalf".

The United Provinces Minor Irrigation Works Act, 1920.

(U. P. I of 1920.)

Save as otherwise expressly provided, throughout the Act, except in the Preamble, for "Government" and "the local Government" substitute "the Provincial Government".

Section 1.—Omit "for the time being", but save as aforesaid the section shall stand unmodified.

Sections 35 and 43.—For "Government" substitute "the Crown"

The United Provinces Private Irrigation Works Act, 1920.

(U. P. II of 1920.)

Section 1.—Omit "for the time being", but save as aforesaid the section shall stand unmodified.

The Lucknow University Act, 1920.

(U. P. V of 1920.)

For section 7 substitute—

"7.—(1) The Provincial Government shall have the right to cause an inspection to be made by such person or persons as it may direct of the University, its buildings, laboratories, workshops and equipment, and of any institutions associated with the University, and also of the examination, teaching and other work conducted or done by the University, and to cause an inquiry to be made in like manner in respect of any matter connected with the University. Visitation.

The Provincial Government shall in every case give notice to the University of its intention to cause an inspection or inquiry to be made, and the University shall be entitled to be represented thereat.

(2) The Provincial Government shall communicate to the Court and to the Executive Council its views with reference to the results of any such inspection or inquiry, and shall after ascertaining the opinion of the Executive Council thereon, advise the University upon the action to be taken.

(3) The Executive Council shall report to the Provincial Government the action, if any, which is proposed to be taken or has been taken upon the results of the inspection or inquiry.

Such report shall be submitted within such time as the Provincial Government may direct through the Court, which may express its opinion thereon.

(4) Where the Executive Council do not within a reasonable time, take action to the satisfaction of the Provincial Government, the Provincial Government may, after considering any explanation furnished or representation made by the Executive Council, issue such directions as it may think fit, and the Executive Council shall comply with those directions".

Section 9.—"Governor of the United Provinces" shall stand unmodified.

Section 34.—For "Governor-General in Council" substitute "Provincial Government".

Section 37.—In subsection (2) after "Court" insert "and", and omit "and to the visitor".

Section 43.—After "by the Government" insert "concerned" and for "discretion of the Government" substitute "option of the government concerned".

Section 45.—For "Governor-General in Council" substitute "Provincial Government".

The Schedule.—In Statute 2 (1) for clause (*i*) substitute—

"(*i*) the Ministers of the Governor of the United Provinces".

The United Provinces Village Panchayat Act, 1920.

(U. P. VI of 1920.)

Section 1.—In subsection (2) omit "for the time being", but save as aforesaid that subsection shall stand unmodified.

Section 16.—For "the Government" substitute "the Crown".

Section 60.—Omit "and shall be credited by the panchayat to the village fund".

Section 61.—Omit "and the payment so made shall be debited to the village fund"

Section 64.—Omit clauses (1) and (2) and for "the Government" substitute "any Government".

The United Provinces Estates Act, 1920.

(U. P. VII of 1920.)

Sections 4, 6, 21, 23 and 25.—Omit "in its discretion".

Section 33.—For "Secretary of State for India in Council" substitute "Crown".

The United Provinces Deputy Presidents' Salary Act, 1921.

(U. P. I of 1921.)

This Act shall cease to have effect.

The Intermediate Education Act, 1921.

(U. P. II of 1921.)

Section 1.—Omit "for the time being".

Section 3.—For "Government" substitute "the Provincial Government" and for clause (*m*) of subsection (1) substitute—

"(*m*) two members elected by the members of the Legislative Assembly, and one member by the members of the Legislative Council".

The Allahabad University Act, 1921.

(U. P. III of 1921.)

For section 8 substitute—

"Visitation.

8.—(1) The Provincial Government shall have the right to cause an inspection to be made by such person or persons as it may direct, of the University, its buildings, laboratories workshops and equipment, and also of the examinations, teaching and other work conducted or done by the University, and to cause an inquiry to be made in like manner in respect of any matter connected with the University. The Provincial Government shall in every case give notice to the University of its intention to cause an inspection or inquiry to be made, and the University shall be entitled to be represented thereat.

(2) The Provincial Government shall communicate to the Court and to the Executive Council its views with reference to the results of any such inspection or inquiry, and shall, after ascertaining the opinion of the Court and the Executive Council thereon, advise the University upon the action to be taken.

(3) The Executive Council shall report to the Provincial Government the action, if any, which is proposed to be taken or has been taken upon the results of the inspection or inquiry.

The report shall be submitted within such time as the Provincial Government may direct through the Court, which may express its opinion thereon.

(4) Where the Executive Council does not, within a reasonable time, take action to the satisfaction of the Provincial Government, the Provincial Government may, after considering any explanation furnished or representation made by the Court and the Executive Council, issue such directions as it may think fit, and the Executive Council shall comply with those directions."

Section 10.—"Governor of the United Provinces" shall stand unmodified.

Section 17.—In clause (iii) omit "Members of the Executive Council and the".

For clause (xv) substitute—

"(xv) Persons elected by the Legislative Council of the Province from among their own body,

(xv*a*) Persons elected by the Legislative Assembly of the Province from among their own body".

Section 40.—In subsection (2) after "Court" insert "and" and omit "and to the Visitor".

Section 46.—After "by the Government" insert "concerned" and for "discretion of the Government" substitute "option of the government concerned".

Section 48.—For "Governor-General in Council" substitute "Provincial Government".

Schedule I.—In Statute 2 for subsection (5) substitute—

"(5) The number of persons elected by the Legislative Council under head (xv) of section 17 shall be two and the number of persons elected by the members of the Legislative Assembly under head (xv*a*) of that section shall be three".

The United Provinces Aerial Ropeways Act, 1922.

(U. P. I of 1922.)

Section 1.—Omit "for the time being".

Section 5.—Omit "at its discretion" and for "Government" substitute "the Crown".

Section 12.—For "the Government" substitute "the Provincial Government".

The United Provinces District Boards Act, 1922.

(U.P. X of 1922.)

Throughout the Act for "Government servant" and "Government servants" substitute "person in the service of the Crown" and "persons in the service of the Crown" and for "service of Government" substitute "service of the Crown".

Section 1.—Omit "for the time being".

Section 3.—In clause (6) for "Government" substitute "the Crown".

Section 5.—For "Government provincial census" substitute "Government census".

Section 31.—For "Secretary of State" substitute "Provincial Government".

Section 33.—Omit "in the name of the Secretary of State in Council".

Section 35.—For "the decision of Government" substitute "the decision of the Provincial Government".

Section 35A.—For "appointed by the Government" substitute "appointed by the Provincial Government".

Section 38.—In subsection (4) for "Government" substitute "Provincial Government".

Section 54.—For "Government officers" substitute "servants of the Crown".

Section 63A.—In subsections (4), (9), (19) and (20) for "Government" and "the Government" substitute "the Provincial Government".

Section 84.—For the first "of Government" substitute "of any Government" and for the second "of Government" substitute "of the Provincial Government".

Section 85.—In subsection (1) for "Government" substitute "any Government".

In subsection (2) for "by the Governor-General in Council or by Government" substitute "by the Government concerned".

In subsection (3) for "Government" substitute "the Government concerned".

Section 87.—For the first "Governor General in Council" substitute "Provincial Government"; for "under any general or special orders of the Governor General in Council" substitute "under the conditions of his service under the Crown" and for "under Government" substitute "under the Crown".

Section 92.—For the proviso to clause (*f*) substitute—

"Provided that no action shall be taken under this clause as respects any Federal Railway as defined in the Government of India Act, 1935, without the previous sanction of the Federal Railway Authority, or in any other case without the previous sanction of the Provincial Government".

Section 114.—For "service under Government" substitute "service under the Crown".

Section 144.—Omit sub-section (2).

Section 147.—For "the Government" substitute "any Government".

Section 171.—After "His Majesty" insert "for the purposes of the Province".

The United Provinces Board of Revenue Act, 1922.

(U.P. XII of 1922.)

Section 1.—Omit "for the time being".

The United Provinces Board of Revenue (Amendment) Act, 1924.

(U.P. I of 1924.)

Section 1.—Omit "for the time being".

The United Provinces Public Gambling (Amendment) Act, 1925.

(U.P. I of 1925.)

Section 1.—Omit "for the time being".

The United Provinces Legislative Council Salary of President Act, 1925.

(U.P. III of 1925.)

This Act shall cease to have effect.

The Oudh Courts Act, 1925.

(U.P. IV of 1925.)

For section 4 substitute—

"4. The Chief Court shall consist of a Chief Judge and such other Judges as may be appointed under the Government of India Act, 1935". Constitution of Chief Court.

Omit section 5.

Section 17.—In sub-section (1) for "The Chief Court may appoint" substitute "There may be appointed for the Chief Court"; and omit sub-sections (2) and (4).

Omit section 23.

Section 24.—For "upon the recommendation of" substitute "after consulting".

Omit sections 26, 27, 35, 36, 37 and 44.

The United Provinces District Board Primary Education Act, 1926.

(U.P. I of 1926.)

Section 15.—Omit "on conviction or".

The Agra Tenancy Act, 1926.

(U.P. III of 1926.)

Sections 23, 29 and 35.—For "Government" substitute "the Crown".

Section 132.—For "Government" substitute "Crown".

Section 151.—For "Secretary of State for India in Council" and "Government" substitute "Crown".

Section 194.—For "Government" substitute "the Provincial Government".

The Agra University Act, 1926.

(U.P. VIII of 1926.)

Section 6.—Omit sub-section (1) and for "Visitor" substitute Central Government".

Section 8.—For "The Governor of the United Provinces" substitute "Such person as the Governor-General, exercising his individual judgment, may nominate".

Section 14.—In sub-section (1), for clause (ii) substitute—

"(ii) the Ministers of the Governor of the United Provinces".

For clause (xi) substitute—

"(xi) four persons elected by the Legislative Assembly of the Province from among their own body;

(xi *a*) two persons elected by the Legislative Council of the Province from among their own body."

Section 33.—For "local Government" substitute "Central Government".

Sections 39 and 41.—For "local Government" substitute "Central Government".

Schedule 1, Statute II.—Omit clause (1).

In the proviso to clause (5) after "(xi)" insert "(xi *a*)" and after "Legislative" insert "Assembly or".

The United Provinces Legislative Council Salary of President (Amendment) Act, 1926.

(U.P. IX of 1926.)

This Act shall cease to have effect.

The United Provinces Deputy Presidents' Salary (Amendment) Act, 1927.

(U.P. I of 1927.)

This Act shall cease to have effect.

The Agra Province Zamindars' Association Contribution Act, 1927.

(U.P. II of 1927.)

Sections 3 and 4.—For "under the Second Schedule of the United Provinces Electoral Rules or such other rules as may for the time being be in force as electors for one of the Agra Landholders' constituencies" substitute "as electors for the Agra Province Zamindars' Association, Allahabad, constituency under the Orders in Council for the time being in force relating to elections to the United Provinces Legislative Assembly".

The Naik Girls Protection Act, 1929.

(U.P. II of 1929.)

Section 7.—For "the Council" substitute "both Chambers of the Provincial Legislature".

The Northern India Canal and Drainage (United Provinces Amendment) Act, 1932.

(U.P. VI of 1932.)

Section 1.—Omit "for the time being".

The United Provinces Court-Fees Amendment Act, 1933.

(U.P. III of 1933.)

Section 1.—Omit "for the time being".

The United Provinces Opium Smoking Act, 1934.

(U.P. III of 1934.)

Sections 26 and 27.—For "Secretary of State for India in Council" substitute "Crown".

The United Provinces Nurses, Midwives, Assistant Midwives and Health Visitors Registration Act, 1934.

(U.P. XV of 1934.)

Section 4.—In sub-section (1) for "eighteen" substitute "nineteen" and for clause (*b*) (ii) of that sub-section substitute—

"(ii) two members of the United Provinces Legislative Assembly elected by the members of that Assembly;

(ii*a*) one member of the United Provinces Legislative Council elected by the members of that Council".

Section 24.—For "the Local Government" substitute "the Provincial Government of the United Provinces".

The United Provinces Temporary Regulation of Execution Act, 1934.

(U.P. XXIV of 1934.)

Section 13.—In sub-section (2) for "Legislative Council" substitute "Chambers of the Provincial Legislature".

In sub-section (3) for "the Legislative Council" substitute "either Chamber of the Provincial Legislature".

The United Provinces Incumbered Estates Act, 1934.

(U.P. XXV of 1934.)

Section 2.—For "debt due to Government" substitute "debt due to the Crown".

Section 54.—In sub-section (2) for "local Legislative Council" substitute "Chambers of the Provincial Legislature".

In sub-section (3) for "the local Legislative Council" substitute "either Chamber of the Provincial Legislature".

The United Provinces Regulation of Sales Act, 1934.

(U.P. XXVI of 1934.)

Section 11.—In sub-section (2) for "Legislative Council" substitute "Chambers of the Provincial Legislature".

In sub-section (3) for "the Legislative Council" substitute "either Chamber of the Provincial Legislature".

The United Provinces Agriculturists' Relief Act, 1934.

(U.P. XXVII of 1934.)

Section 1.—For "the Legislative Council" substitute "both Chambers of the Provincial Legislature".

Section 2.—In clause (10) for the Local Government" substitute "the Central Government or the Provincial Government".

Section 41.—In sub-section (2) for "Legislative Council" substitute "Chambers of the Provincial Legislature".

In sub-section (3) for "the Legislative Council" substitute "either Chamber of the Provincial Legislature".

The United Provinces National Parks Act, 1935.

(U. P. I of 1935.)

Sections 4 and 5.—For "United Provinces Legislative Council" substitute "both Chambers of the Provincial Legislature".

Section 6.—For "Government" substitute "the Provincial Government".

Section 9.—For "Government official" substitute "person in the service of the Crown".

The United Provinces Motor Vehicles Taxation Act, 1935.

(U. P. V of 1935.)

Omit section 19.

Section 21.—For "the Legislative Council" substitute "both Chambers of the Provincial Legislature".

SCHEDULE VI.

PUNJAB ACTS.

The Punjab General Clauses Act, 1898.

(Pb. I of 1898.)

Section 2.—In the opening clause for "all Acts of the Lieutenant-Governor of the Punjab in Council" substitute "all Punjab Acts".

Omit clause (5).

Omit clause (8).

At the end of clause (10) insert—

"Provided that in any Punjab Act passed after the commencement of Part III of the Government of India Act, 1935, 'colony' shall not include any Dominion as defined in the Statute of Westminster, 1931, any Province or State forming part of such a Dominion, or British Burma".

Omit clauses (21), (24), (28), (29) and (31).

In clause (41), in sub-clause (*a*) for "Government" substitute "Crown" and in sub-clause (*b*) omit "of the Government of India or of any Local Government", "by the Government of India or the Local Government" and "and extradition".

Omit clause (45).

For clause (46) substitute—

"(46) 'Punjab Act' shall mean an Act made by the Lieutenant-Governor of the Punjab in Council under the Indian Councils Acts 1861 to 1909, or any of those Acts, or the Government of India Act, 1915, or by the Local Legislature or the Governor of the Punjab under the Government of India Act, or by the Provincial Legislature or the Governor of the Punjab under the Government of India Act, 1935".

Section 3.—For the words from "on the day" to "1861" substitute "if it is an Act of the Legislature, on the day on which the assent thereto of the Governor, the Governor-General or His Majesty, as the case may require, is first published in the Official Gazette, and, if it is an Act of the Governor, on the day on which it is first published as an Act in the Official Gazette,".

Section 21.—For "Local Government" substitute "Central Government or, as the case may be, the Provincial Government,".

After section 26 insert—

"Application to Ordinances and regulations under the Government of India Act, 1935.

27. The provisions of this Act shall apply—

(a) in relation to any regulation made by the Governor of the Punjab under section 92 of the Government of India Act, 1935, as they apply in relation to Acts made by the Provincial Legislature of the Punjab; and

(b) in relation to any ordinance promulgated by the Governor under section 88 or section 89 of the said Act, as they apply in relation to Acts made under that Act by the Governor."

The Punjab Land Preservation (Chos) Act, 1900.

(Pb. II of 1900.)

Section 8.—In sub-section (2) for "vest in the Government" substitute "vest in His Majesty for the purposes of the Province".

In sub-section (4) for "the Government" substitute "His Majesty".

Section 10.—In sub-section (2) for "the Government" and "Government" substitute "His Majesty".

Section 21.—For "the Secretary of State for India in Council or the Government" substitute "the Crown".

The Court of Wards Act, 1903.

(Pb. II of 1903.)

Section 29.—For "Government" substitute "Crown".

The Punjab Minor Canals Act, 1905.

(Pb. III of 1905.)

Section 2.—In sub-section (2) for "Government" in proviso (*a*) substitute "His Majesty for the purposes of the Province"; in proviso (*b*) for "Government officers" substitute "servants of the Crown" and in proviso (*d*) for "by direction of Government" substitute "by direction of the Provincial Government".

Sections 4, 5(1), 6(1) and 10(3).—For "Government" substitute "the Provincial Government".

Section 28.—For "Government" in sub-section (2) and "the Government" in sub-section (3) substitute "the Provincial Government".

Section 48.—For "the Government" substitute "the Crown for the purposes of the Province".

Section 67.—For "Secretary of State for India in Council" substitute "Provincial Government"; for "against the Government" substitute "against the Crown" and for "or Government" substitute "or the Provincial Government".

Section 72.—For "Government officers" substitute "servants of the Crown".

Section 74.—For "of Government" substitute "of the Crown".

The Punjab Municipal Act, 1911.

(Pb. III of 1911.)

Section 1.—Omit "for the time being".

Section 4.—Omit "without the consent of the Governor-General in Council".

Sections 5(1) and 6.—Omit the provisos.

Section 8.—For "the benefit of the local area" substitute "the purposes of the Province"; for "the Secretary of State for India in Council" substitute "the Provincial Government", and omit sub-section (2).

Section 10.—In sub-section (2) after "His Majesty" insert "for the purposes of the Province", and for "Secretary of State for India in Council" substitute "Provincial Government".

Omit sub-section (3).

Section 16.—Omit "or the Secretary of State for India in Council".

Section 40.—For "Government official" substitute "person in the service of the Crown".

Section 43.—For "Government official" substitute "person in the service of the Crown".

In clause (*a*) of sub-section (1) for "contribute to his pension, gratuity and leave allowances in accordance with any general or special orders of the Governor-General in Council in force for the time being" substitute "make such contributions to his pension, gratuity and leave allowances as may be required, by the conditions of his service under the Crown, to be paid by him or on his behalf".

In sub-section (4) omit "under any general or special orders of the Governor-General in Council for the time being in force", and for "Government" substitute "the Crown".

Section 44.—For "Government" and "the Government" substitute "the Crown"; for "contribute to his pension and leave allowances to the extent required by the rules in force for the time being made by the Governor-General in Council in this behalf" substitute "make such contributions to his pension and leave allowances as may be required, by the conditions of his service under the Crown, to be paid by him or on his behalf"; and for "the Local Government" substitute "the Government concerned."

Section 52.—In clause (*f*) of sub-section (1) for "Government" substitute "the Provincial Government".

Section 53.—For "officer of Government" substitute "servant of the Crown".

Section 56.—For "by Government" and "by the Government" substitute "by the Crown".

Section 61.—For "Government official" substitute "person in the service of the Crown".

In clause (2) for the words from "under rules" to the end substitute "the Provincial Legislature has power to impose in the Province under the Government of India Act, 1935".

Omit clause (3).

At the end of the section insert:—

"Nothing in this section shall authorise the imposition of any tax which the Provincial Legislature has no power to impose in the Province under the Government of India Act, 1935:

Provided that a committee which immediately before the commencement of Part III of the said Act was lawfully levying any such tax under this section as then in force, may continue to levy that tax until provision to the contrary is made by the Central Legislature."

Section 62.—In sub-sections (7) and (8) omit "or (3)"; omit sub-section (9) and in sub-section (10) omit "or sub-section (9)".

Section 81A.—For "Government" substitute "the Provincial Government".

Section 84.—For "Chief Court" substitute "High Court".

Section 169.—For "owned by proprietors other than the Local Government" substitute "owned by proprietors other than the Crown".

Section 174A.—For "if any street, being the property of the Local Government and not having been transferred by it, vests in the Local Government" substitute "if any street is vested in the Crown for the purposes of the Province".

Section 193.—In sub-section (2) for "is Government property or vests in the committee" substitute "is vested in the Crown or in the committee"; for "consent of Government or the committee" substitute "consent of the Government concerned or, as the case may be, of the committee", and for "or the Government" substitute "or any Government".

Section 238.—After "His Majesty" insert "for the purposes of the Province".

Section 239.—At the end of sub-section (2) insert:—

"Provided that where a dispute referred to the Provincial Government under clause (c) of sub-section (1) is between a committee and a Cantonment authority, the decision of the Provincial Government shall be subject to the concurrence of the Central Government."

Section 242.—In clause (a) of sub-section (1) omit "without the previous sanction of the Governor-General in Council" and "whether with or without such sanction."

The Colonization of Government Land (Punjab) Act, 1912.

(Pb. V of 1912.)

Section 3.—In the definition of "tenant" for "of Government" substitute "of the Crown."

Section 4.—For "property of the Government" substitute "property of the Crown for the purposes of the Province."

Section 6.—For "Government tenants" substitute "tenants of the Crown" and for "Government is" substitute "the Crown is."

Sections 14, 15, 16 and 28.—For "Government" substitute "the Crown."

Section 30.—For "by Government" substitute "by the Provincial Government."

Sections 32 and 33.—For "Government" substitute "the Crown."

Schedule II.—In conditions 1 and 2 for "Government" and "the Government" substitute "the Crown."

In condition (5) for "between the Government" and "between Government" substitute "between the Provincial Government" and for "to Government" substitute "to the Crown."

The Punjab Pre-emption Act, 1913.

(Pb. I of 1913.)

Section 9.—For "the Government" substitute "the Crown".

The Punjab Excise Act, 1914.

(Pb. I of 1914.)

Throughout the Act, except as otherwise provided and except in sections 31 and 32, for "excisable article" and "excisable articles" substitute "intoxicant" and "intoxicants."

Section 3.—For clause (6) substitute—

"(6) 'excisable article' means

(*a*) any alcoholic liquor for human consumption; or

(*b*) any intoxicating drug; or

(*c*) any medicinal or toilet preparation containing alcohol."

After clause (6) insert—

"(6*a*) 'excise duty' and 'countervailing duty' mean any such excise duty or countervailing duty, as the case may be, as is mentioned in Item 40 of List II in the Seventh Schedule to the Government of India Act, 1935."

For clause (10) substitute—

"(10) 'export' means to take out of the Punjab otherwise than across a customs frontier as defined by the Central Government."

For clause (12) substitute—

"(12) 'import' (except in the phrase "import into British India") means to bring into the Punjab otherwise than across a customs frontier as defined by the Central Government."

After clause (12) insert—

"(12*a*) 'intoxicant' means any liquor or intoxicating drug."

Section 4.—Omit the proviso.

Section 6.—For "articles" substitute "intoxicants."

Section 16.—For "duty of customs, or excise to which it may be liable" substitute "duty to which it may be liable under this Act."

Section 17.—Omit the proviso.

Section 23.—For "imposed under section 31" substitute "payable under Chapter V."

Section 28.—For "Local Government" substitute "Central Government."

Section 31.—For "A duty" substitute "An excise duty or a countervailing duty, as the case may be."

Omit proviso (ii).

After section 33 insert—

"33A.—(1) Until provision to the contrary is made by the Central Legislature, the Provincial Government may continue to levy any duty to which this section applies which it was lawfully levying immediately before the commencement of the Government of India Act, 1935, under this Chapter as then in force.

"Saving for duties being levied at commencement of Part III of the Government of India Act, 1935.

(2) The duties to which this section applies are—

(a) any duty on intoxicants which are not excisable articles within the meaning of this Act; and

(b) any duty on an excisable article produced outside India and imported into the Punjab whether across a customs frontier as defined by the Central Government or not.

(3) Nothing in this section shall authorise the levy by the Provincial Government of any duty which, as between goods manufactured or produced in the Province and similar goods not so manufactured or produced, discriminates in favour of the former, or which, in the case of goods manufactured or produced outside the Province, discriminates between goods manufactured or produced in one locality and similar goods manufactured or produced in another locality."

Section 37.—After "to such person" insert "by, or by the authority of the Provincial Government".

Section 41.—For "Government" substitute "the Provincial Government."

Section 47.—For "excisable" substitute "intoxicant."

Section 57.—For "Secretary of State for India in Council" substitute "Crown."

Section 60.—For the first "Government" substitute "the Crown" and for the second "Government" substitute "the Provincial Government".

The Punjab Military Transport Act, 1916.

(Pb. I of 1916.)

Throughout the Act for "Local Government" substitute "Central Government".

In section 13 for "property of the Government" substitute "property of the Crown" and elsewhere for "Government" and "the Government" substitute "the Central Government".

Sections 14 and 15.—For "Government" substitute "Central Government".

Section 17.—For "the Government" substitute, in sub-section (1) "the Central Government", and in sub-section (5) "the Crown".

Section 18.—For "Government" substitute "Central Government".

Section 25.—For "Government" in sub-section (5) substitute "Central Government" and in sub-section (6) substitute "Crown."

Section 26.—For "Government" substitute "Crown".

Section 30.—For "by Government" substitute "by the Central Government."

The Punjab Medical Registration Act, 1916.

(Pb. II of 1916.)

After section 24 insert—

"Saving for provisions of the Government of India Act, 1935.

"25. This Act has effect subject to the provisions of Chapter III of Part V of the Government of India Act, 1935."

The Schedule.—In clause (7), for "granted by a Local Government" substitute "granted by a Provincial Government or the Government of Burma".

The Punjab Courts Act, 1918.

(Pb. VI of 1918.)

Section 22.—Omit from "and when there is a vacancy" to the end of the section.

Omit sections 32 and 35.

Section 37.—For "34 and 35" substitute "and 34".

The Deputy President's (Punjab Legislative Council) Salary Act, 1921.

(Pb. I of 1921.)

This Act shall cease to have effect.

The Punjab Small Towns Act, 1921.

(Pb. II of 1922.)

Section 15.—Omit clause (*b*).

Section 16.—For "the Government" substitute "any Government".

Section 19.—For "Secretary of State for India in Council" substitute "Crown".

Section 20.—For "by the Government" substitute "by the Crown" and for "to the Government" substitute "to the Provincial Government".

Section 21.—For "Government servant" and "Government servants" substitute "servant of the Crown" and "servants of the Crown".

For section 22 substitute—

"Taxes which may be imposed with previous sanction.

22. The Committee may, with the previous sanction of the Provincial Government, impose any other taxes.

22A. Nothing in the two last preceding sections shall authorise the imposition of any tax which the Provincial Legislature has no power to impose in the Province under the Government of India Act, 1935:

Restriction on new taxation after commencement of Part III of Government of India Act, 1935.

Provided that a Committee which, immediately before the commencement of Part III of the said Act, was lawfully levying any such tax under either of those sections as then in force, may continue to levy that tax until provision to the contrary is made by the Central Legislature."

Section 49.—For "vest in the Local Government" substitute "vest in His Majesty for the purposes of the Province".

Section 51.—For "Governor-General in Council" substitute "Provincial Government" and for "Government servants" substitute "servants of the Crown".

The Punjab Village Panchayat Act, 1921.

(Pb. III of 1922.)

Section 1.—Omit "for the time being", but in other respects the section shall stand unmodified.

Sections 14 and 15.—For "any department of Government" substitute "any department of the Central or the Provincial Government".

Section 21.—For "excisable article" substitute "intoxicant" and omit "section 3 (6) of".

Section 26.—For "Secretary of State" substitute "Crown".

Section 34.—For "Government" substitute "any Government".

The Punjab Town Improvement Act, 1922.

(Pb. IV of 1922.)

Section 4.—For "Government servant" substitute "servant of the Crown" and for "service of Government" substitute "service of the Crown".

Section 10.—For "officer of the Government" substitute "servant of the Crown".

Section 25.—For "debt due to Government" substitute "debt due to the Provincial Government".

Section 43.—For "by Government" substitute "by the Provincial Government".

Section 73.—For "officers of the Government" substitute "servants of the Crown"; for "servant of the Government" and "Government servant" substitute "servant of the Crown", and for "in any general or special orders of the Government" substitute "by the conditions of his service under the Crown".

Omit section 92.

Section 94.—For "Government servant" substitute "servant of the Crown" and for "prescribed in any general or special orders of the Government" substitute "required by the conditions of his service under the Crown to be paid by him or on his behalf".

The Punjab Opium-Smoking Act, 1923.

(Pb VI of 1923.)

Section 17.—For "Secretary of State for India in Council" substitute "Crown".

The Elected President's Salary Act, 1924.

(Pb. II of 1924.)

This Act shall cease to have effect.

The Sikh Gurdwaras Act, 1925.

(Pb VIII of 1925.)

Throughout the Act for "the Secretary to Government, Transferred Departments" substitute "the appropriate Secretary to Government"

Section 12.—In sub-section (2) omit "appointed by notification by the Governor-General in Council".

In sub-section (4) omit "or in the case of the President by the Governor-General in Council"

Omit sub-section (5).

In sub-section (6) omit "the Governor-General in Council where the vacancy occurs in the office of President and in any other case".

Section 49.—For "Legislative Council of the Governor" substitute "Provincial Legislative Assembly"

Section 70.—For "Government service" substitute "the service of the Crown".

Section 92.—For "Legislative Council of the Governor" substitute "Provincial Legislative Assembly"

The Punjab Aerial Ropeways Act, 1926.

(Pb V of 1926.)

Section 5.—Omit "at its discretion" and for "from Government" substitute "from the Crown".

Section 6.—For clause (*ix*) of sub-section (4) substitute—

"(*ix*) The rules relating to the construction of the aerial ropeway over roads and other public ways of communication, except railways as defined by the Government of India Act, 1935, and, with the previous sanction of the Federal Railway Authority or the Central Government, over such railways."

Section 9.—Omit "in its discretion".

Section 12.—For "by Government" substitute "by the Provincial Government".

The Good Conduct Prisoners' Probational Release Act, 1926.

(Pb. X of 1926.)

Sections 2 and 7.—For "a Government officer" substitute "a servant of the Crown".

The Punjab Borstal Act, 1926.

(Pb. XI of 1926.)

Section 15.—For "Government officer" substitute "servant of the Crown".

Section 28.—In clause (*a*) of sub-section (1) for "Governor-General in Council" substitute "Central Government, or of the Crown Representative".

In clause (*b*) of sub-section (1) for "the territories of any Native Prince or State in India" substitute "any Indian State"; for "British Government" substitute "Crown"; for "by the Native Prince or State or by the Governor-General in Council" substitute "by, or by the Ruler of, that State or by the Central Government or the Crown Representative"; for "in British India or in any Province of British India" substitute "in the Province", and for "by the Governor-General in Council or the Local Government, as the case may be," substitute "by the Provincial Government".

For clause (*c*) of sub-section (1) substitute—

"(*c*) by any other Court or tribunal in any Indian State with the previous sanction of the Provincial Government in the case of each such order".

In sub-section (2) for "of such a Native Prince or State" substitute "in an Indian State"; for "British Government" substitute "Crown" and for "Governor-General in Council" substitute "Central Government or the Crown Representative".

Section 31.—In sub-section (4) for "the territories of any Native Prince or State in India" substitute "any Indian State" and for "such Native Prince or State" substitute "that State or the Ruler thereof".

Section 32.—Omit "or the Governor-General".

The Public Gambling (Punjab) Amendment Act, 1929.

(Pb. I of 1929.)

Section 1.—In sub-section (2) omit "for the time being", but in other respects the sub-section shall stand unmodified.

The Punjab Pure Food Act, 1929.

(Pb. VIII of 1929.)

Section 6.—In sub-sections (1) and (2) for "Director of Public Health" substitute "Provincial Government".

Section 22.—In sub-section (5) for "Council" substitute "Assembly".

The Punjab Regulation of Accounts Act, 1930.

(Pb. I of 1930.)

Section 2.—In clause (1) for "Indian Legislature" substitute "Central Legislature".

In clause (7) for "Government" substitute "the Central or any Provincial Government".

Section 6.—For "Council" substitute "Assembly".

The Punjab Municipal (Executive Officer) Act, 1931.

(Pb. II of 1931.)

Section 11.—For "Council" substitute "Assembly".

Schedule II.—In the first proviso in clause 12 for "Government" substitute "the Crown".

The Kalra Impartible Estates Act, 1931.

(Pb. III of 1931.)

Throughout the Act "the Governor" shall stand unmodified.

After section 9 insert:—

"Governor to exercise his functions in his discretion.

9A. The functions of the Governor under the foregoing provisions of this Act shall be exercised by him in his discretion."

Section 11.—For "Government" substitute "the Provincial Government".

The Punjab Service Commission Act, 1932.

(Pb. II of 1932.)

This Act shall cease to have effect.

The Punjab Wild Birds and Wild Animals Protection Act, 1933.

(Pb. II of 1933.)

Section 8.—For "the property of Government" substitute "vested in His Majesty for the purposes of the Province".

Section 11.—For "Government" substitute "the Provincial Government".

The Punjab Tobacco Vend Fees Act, 1934.

(Pb. V of 1934.)

Section 13.—For "Council" substitute "Assembly".

The Punjab Criminal Law (Amendment) Act, 1935.

(Pb. II of 1935.)

Section 2.—For "officer of Government" substitute "servant of the Crown".

The Punjab Suppression of Immoral Traffic Act, 1935.

(Pb. IV of 1935.)

Section 17.—For "Council" substitute "Assembly"

The Punjab State Aid to Industry Act, 1935.

(Pb. V of 1935.)

Section 3.—In sub-section (1), for clause (*d*) substitute:—

"(*d*) five members to be elected by the Punjab Legislative Assembly from among their members, election being in accordance with the principle of proportional representation by means of the single transferable vote."

Section 9.—For "Council" substitute "Assembly" and omit "non-official".

Section 17.—For "of the Local Government" substitute "vested in His Majesty for the purposes of the Province".

Section 38.—For "property of the Local Government" substitute "property of the Crown".

The Punjab Debtors Protection Act, 1936.

(Pb. II of 1936.)

Section 2.—For "Indian Legislature" substitute "Central Legislature".

The Punjab Consolidation of Holdings Act, 1936.

(Pb. IV of 1936.)

Section 15.—Omit "in its discretion".

Section 26.—For "Council" substitute "Assembly".

SCHEDULE VII

BIHAR AND ORISSA ACTS.

The Bihar and Orissa Board of Revenue Act, 1913.

(B. and O. I of 1913.)

Section 2.—Omit "of Bihar and Orissa" and "for Bihar and Orissa".

The Orissa Tenancy Act, 1913.

(B. and O. II of 1913.)

Section 3.—In clause (9) for "Government" substitute "Crown".

Section 55.—For the first "the Government" substitute "any Government" and for the second, third and fourth "the Government" substitute "the Crown".

Section 73.—For "Secretary of State for India in Council" and "Government" substitute "Crown".

Section 112.—In sub-section (2) for "belongs to, or is managed by, the Government or" substitute "belongs to, or is managed on behalf of, the Crown, or is managed by" and for "belongs to the Government" substitute "belongs to the Crown".

Section 118.—For "the Government" substitute "the Crown".

Section 126.—For "the Secretary of State for India in Council" and for "the Government" substitute "the Crown".

Sections 145 and 171.—For "the Government" substitute "the Provincial Government".

Section 252.—For the first "Government" substitute "Crown".

Schedule I.—"Governor General of India in Council" shall stand unmodified.

The Chota Nagpur Rural Police Act, 1914.

(B. and O. I of 1914.)

Section 3.—For "shall appoint a Unit-tahsildar" substitute "a Unit-tahsildar shall be appointed by the Provincial Government".

Section 30.—For "Subject to the approval of the Deputy Commissioner, the Superintendent of Police" substitute "the Provincial Government".

Section 37.—In sub-section (2) omit clause (*c*).

The Jharia Water Supply Act, 1914.

(B. and O. III of 1914.)

Section 2.—In clause (*dd*) for the first "the Government" substitute "a Government or a Federal Railway Authority".

Section 21.—In sub-section (1) after "vested in" insert "the Crown"; for the first "the Local Government" substitute "the Central or the Provincial Government" and for the second "the Local Government" substitute "the Government".

Sub-section (2).—In clause (*e*) for "of Government" substitute "of the Central or the Provincial Government" and for proviso (i) substitute—

"(i) in the case of the railway administration of a Federal Railway (within the meaning of the Government of India Act, 1935), except with the sanction of the Federal Railway Authority;

(iA) in the case of a department of the Central Government, except with the sanction of that Government."

Section 45.—Omit "fines, penalties" and after "under this Act" insert "except as fines or penalties".

Section 54.—At the end insert—

"Provided that the tonnage cess shall, after the commencement of Part III of the Government of India Act, 1935, only be leviable until provision to the contrary is made by the Central Legislature."

Section 82.—For "vest in the Local Government" substitute "vest in the Crown for the purposes of the Province".

The Bihar and Orissa Public Demands Recovery Act, 1914.

(B. and O. IV of 1914.)

Section 3.—For "Secretary of State for India in Council or other" substitute "Government or".

Section 18.—For "pensioners of the Government" substitute "pensioners of the Crown", for "Governor-General in Council" substitute "Central or any Provincial Government", and for "any law passed under the Indian Councils Acts, 1861 and 1892" substitute "any Indian law in force in the Province".

Section 28.—For "the Government" substitute "the Crown"

Schedule I.—For "Government officer" substitute "servant of the Crown".

Schedule II.—Rule 18—at the end of sub-rule (3) insert "In this sub-rule 'the Government' means the Central Government, the Provincial Government, or the Federal Railway Authority, as the case may require".

The Patna Administration Act, 1915.

(B. and O. I of 1915.)

Omit the Preamble.

Section 3.—Omit sub-section (2).

At the end of the section add—

"(2) Nothing in this section shall authorise the imposition of any tax which the Provincial Legislature has no power to impose in the Province under the Government of India Act, 1935:

Provided that the Provincial Government may continue to levy any such tax which was being lawfully levied immediately before the commencement of Part III of the said Act under this section as then in force, until provision to the contrary is made by the Central Legislature."

Section 6.—Omit "without the previous sanction of the Government of India".

Omit section 7.

The Bihar and Orissa Excise Act, 1915.

(B. and O. II of 1915.)

Throughout the Act, except as otherwise provided and except in sections 27 and 28, for "excisable article" and "excisable articles" substitute "intoxicant" and "intoxicants".

Section 2.—In clause (2) omit "for Bihar and Orissa".

For clause (6) substitute—

"(6) 'excisable article' means

(*a*) any alcoholic liquor for human consumption; or

(*b*) any intoxicating drug; or

(*c*) any medicinal or toilet preparation containing alcohol."

After clause (6) insert—

"(6*a*) 'excise duty' and 'countervailing duty' mean any such excise duty or countervailing duty, as the case may be, as is mentioned in item 40 of List II in the Seventh Schedule to the Government of India Act, 1935."

For clause (10) substitute—

"(10) 'export' means to take out of the Province otherwise than across a customs frontier as defined by the Central Government."

For clause (12) substitute—

"(12) 'import' (except in the phrase 'import into British India') means to bring into the Province otherwise than across a customs frontier as defined by the Central Government."

After clause (12) insert-

"(12*a*) 'intoxicant' means any liquor or intoxicating drug"

Section 4.—Omit the proviso.

Section 7.—For "Government officer" substitute "servant of the Crown".

Section 9.—For "imposed under section 27" substitute "payable under Chapter V".

Section 10.—For "imposed under section 27, or" substitute "payable under Chapter V" and omit clause (*b*).

Section 11.—Omit the proviso.

Section 17.—For "imposed under section 27" substitute "payable under Chapter V".

Section 21.—For "Local Government" substitute "Central Government".

Section 27.—For "A duty" substitute "An excise duty or a countervailing duty, as the case may be" and in sub-section (3) omit clause (ii).

After section 29 insert—

Saving for duties being levied at commencement of Part III of the Government of India Act, 1935.

"29A.—(1) Until provision to the contrary is made by the Central Legislature, the Provincial Government may continue to levy any duty to which this section applies which it was lawfully levying immediately before the commencement of Part III of the Government of India Act, 1935, under this Chapter as then in force."

(2) The duties to which this section applies are—

(*a*) any duty on intoxicants which are not excisable articles within the meaning of this Act;

(*b*) any duty on an excisable article produced outside India and imported into the Province whether across a customs frontier as defined by the Central Government or not.

(3) Nothing in this section shall authorise the levy by the Provincial Government of any duty which, as between goods manufactured or produced in the Province and similar goods not so manufactured or produced, discriminates in favour of the former, or which, in the case of goods manufactured or produced outside the Province, discriminates between goods manufactured or produced in one locality and similar goods manufactured or produced in another locality."

Section 42.—In sub-section (2) after "such person" insert "by, or by the authority of, the Provincial Government".

Section 43.—For "Government" substitute "Provincial Government".

Section 90.—For "Government officers" substitute "servants of the Crown"

Section 93.—For "Government" substitute "Provincial Government".

Sections 95 and 96.—For "Secretary of State for India in Council" substitute "Crown".

The Bihar and Orissa Medical Act, 1916.

(B. and O. II of 1916.)

Throughout the Act, except in section 1 (1), omit "and Orissa".

After section 33 insert the following section—

"Saving for provisions of the Government of India Act, 1935.

34. This Act has effect subject to the provisions of Chapter III of Part V of the Government of India Act, 1935."

The Schedule.—For "the Government" substitute "the Central or any Provincial Government". In clause (3) after "India" insert "or Burma"; for "by the Government" substitute "by the Government concerned"; and for "maintained by Government" substitute "maintained by any Government".

The Bihar and Orissa General Clauses Act, 1917.

(B. and O. I of 1917.)

Section 4.—In the introductory clause after "Bihar and Orissa Acts" insert "and Bihar Acts".

Clause (5) shall stand unmodified.

After clause (5) insert—

"(5*a*) 'Bihar Act' shall mean an Act made by the Provincial Legislature or the Governor of Bihar under the Government of India Act, 1935".

Omit clause (6).

In clause (7) after "Government of India Act, 1915" insert "or by the Local Legislature or the Governor of Bihar and Orissa or of Bihar under the Government of India Act", but save as aforesaid the clause shall stand unmodified.

Omit clauses 8, 21, 24 and 29.

In clause (30) for "the Government" substitute "any government".

Omit clause (31).

In clause (41), in sub-clause (*a*) for "Government" substitute "Crown" and in sub-clause (*b*) omit "of the Government of India or of any Local Government", "by the Government of India or the local Government" and "and extradition".

Omit clause (42).

Section 6.—Sub-section (1) shall stand unmodified.

After subsection (1) insert—

"(1*a*) Where any Bihar Act is not expressed to come into operation on a particular day, then it shall come into operation, if it is an Act of the Legislature, on the day when the assent thereto of the Governor, the Governor-General or His Majesty, as the case may require, is first published in the Official Gazette, and if it is an Act of the Governor, on the day on which it is first published as an Act in the Official Gazette".

In subsection (2) after "Act" insert "or Bihar Act".

In sections 7 to 13 after "Bihar and Orissa Act" insert "or Bihar Act".

In section 15 after "Acts" insert "and Bihar Acts".

Sections 16 to 24.—After "Bihar and Orissa Act" insert "or Bihar Act".

Section 25.—After "Bihar and Orissa Act" insert "or Bihar Act", and for "the day on which the assent thereto of the Governor-General is first published in the Gazette" and "the assent of the Governor-General has been published as aforesaid" substitute "the passing thereof".

Section 26.—After "Bihar and Orissa Act" insert "or Bihar Act", and for "Local Government" substitute "Central Government or, as the case may be, the Provincial Government,".

Sections 27 to 32.—After "Bihar and Orissa Act" insert "or Bihar Act".

After section 33 insert—

"34. The provisions of this Act shall apply—

Application to ordinances and regulations under the Government of India Act, 1935.

(*a*) in relation to any regulation made by the Governor of Bihar under section 92 of the Government of India Act, 1935, as they apply in relation to Acts made by the Provincial Legislature of Bihar; and

(*b*) in relation to any ordinance promulgated by the Governor under section 88 or section 89 of the said Act, as they apply in relation to Acts made under that Act by the Governor."

The Bihar and Orissa Prevention of Adulteration Act, 1919.

(B. and O. II of 1919.)

Section 12.—In subsection (2) after "area" insert "other than a cantonment" and after subsection (2) insert—

"(3) In respect of a cantonment, the Central Government or, with the approval of the Central Government, the cantonment authority may appoint any person to be a public analyst for the purposes of this Act."

Section 13.—At the end of the section insert—

"(3) As respects cantonments, the rules to be made under clauses (*e*) and (*f*) of subsection (2) shall be made by the Central Government and the reference in clause (*f*) to the Local Government shall be construed as a reference to the Central Government."

Section 15.—At the end insert "in the case of an authority other than a cantonment authority, and by the Central Government in the case of a cantonment authority".

The Bihar and Orissa Places of Pilgrimage Act, 1920.

(B. and O. II of 1920.)

Section 13.—For "without the sanction of the Governor General in Council" substitute "after the commencement of Part III of the Government of India Act, 1935, which was not lawfully being imposed immediately before that date, and any tax so imposed on passengers of those classes shall only be leviable until provision to the contrary is made by the Central Legislature".

Section 20.—Omit "fines, penalties" and after "under this Act" insert "not being fines or penalties".

Section 23.—For "Government of India" substitute "Federal Railway Authority" and after "railway company or administration" insert "operating a railway which is a Federal Railway within the meaning of the Government of India Act, 1935".

The Bihar and Orissa Mining Settlements Act, 1920.

(B. and O. IV of 1920.)

Section 10.—In clause (*d*) omit "fines, penalties" and after "thereunder" insert "not being fines or penalties".

The Bihar and Orissa Legislative Council Deputy President's Salary Act, 1921.

(B. and O. I of 1921.)

This Act shall cease to have effect.

The Bihar and Orissa Village Administration Act, 1922.

(B. and O. III of 1922.)

Section 1.—Omit "without the sanction of the Governor General in Council, previously obtained".

Section 25.—In sub-section (1) for "District Magistrate" substitute "Provincial Government".

Section 49.—Omit clauses (*b*), (*c*) and (*e*).

Section 60.—For "Government or public officers" substitute "the Crown or servants of the Crown".

For section 82 substitute—

"82. All sums realised by panchayats as fines, fees or costs under this Act shall form part of the revenues of the Province". Credit of fines, fees and costs.

The Bihar and Orissa Private Irrigation Works Act, 1922.

(B. and O. V of 1922.)

Section 2.—In clause (2) for "Government" substitute "Crown".

Sections 15 and 18.—For "by Government" and "of Government" substitute "by the Provincial Government" and "of the Provincial Government".

The Bihar and Orissa Minor Irrigation Works Act, 1922.

(B. and O. VI of 1922.)

Section 2.—In clause (1) for "Government" substitute "Crown".

Section 6.—For "in which Government" substitute "in which the Provincial Government".

Sections 10, 11 and 19.—For "to Government", "by which Government", "by Government" and "of Government" substitute "to the Provincial Government", "by which the Provincial Government", "by the Provincial Government" and "of the Provincial Government".

Section 31.—For the first "Government" substitute "the Provincial Government" and for the second "Government" substitute "the Provincial Government, or the Crown for the purposes of the Province".

Section 32.—For "on Government" substitute "on the Provincial Government".

The Bihar and Orissa Municipal Act, 1922.

(B. and O. VII of 1922.)

Section 3.—In clause (26) for "officer of Government" substitute "servant of the Crown", for "from Government" substitute "from the Central or a Provincial Government", for "by Government" substitute "by any Government" and for "retired servant of Government" substitute "retired servant of the Crown".

Section 4.—Omit "without the previous consent of the Governor General in Council".

Section 16.—Omit "with the approval of the Government of India".

Section 41.—For "the Government" substitute "any Government"

Section 58.—For "by Government" substitute "by any Government".

Section 65.—Omit clause (*b*) of sub-section (1).

Section 80.—For "for the benefit of the inhabitants of the local area" substitute "for the purposes of the Province", for "Secretary of State in Council" substitute "Provincial Government"; after "His Majesty" in sub-section (2) insert "for the purposes of the Province", and omit sub-section (3)

Section 82.—In clause (*l*) of sub-section (1) omit from "which has been" to "impose and"; and at the end of the section insert—

"(3) Nothing in this section shall authorise the imposition of any tax or fee which the Provincial Legislature has no power to impose in the Province under the Government of India Act, 1935:

Provided that Commissioners who were immediately before the commencement of Part III of the said Act lawfully levying any such tax or fee under this section as then in force, may continue to levy that tax or fee until provision to the contrary is made by the Central Legislature."

Sections 83 and 91.—For "of Government" substitute "of the Crown"

Section 154.—For "of the Government" substitute "of the Crown".

Section 253.—At the end of the section insert—

"In relation to any European cemetery, this section shall have effect as if for the references to the Provincial Government there were substituted references to the Central Government."

Section 327.—For the words from "Provided that" to the end of the section substitute "not being a cantonment or part of a cantonment".

Omit section 342.

Section 387.—At the end of sub-section (2) insert—

"Provided that, where one of the parties to the dispute is a cantonment authority, the decision of the Provincial Government shall be subject to the concurrence of the Central Government."

The Bihar and Orissa State Aid to Industries Act, 1923.

(B. and O. VI of 1923.)

Section 3.—In sub-section (2) for "Bihar and Orissa Legislative Council" substitute "Bihar Legislative Assembly".

Section 4.—For "property of the Local Government" substitute "property vested in His Majesty for the purposes of the Province".

Omit section 6.

Section 7.—Omit "or the authority to which it has delegated the power to give State aid, as the case may be", and "or the said authority, as the case may be,".

Section 8.—For "Government" substitute "Provincial Government".

Section 17.—For "property of the Local Government" substitute "property of the Crown".

Section 18.—For "Government" substitute "Provincial Government".

Section 23.—For the first "Government" substitute "the Crown for the purposes of the Province" and for the second and third "Government" substitute "the Crown".

Sections 26 and 27.—For "Government" substitute "the Provincial Government".

Section 31.—For "Government officer" substitute "servant of the Crown".

Section 32.—In sub-section (2) omit clause (*c*).

The Bihar and Orissa Aerial Ropeways Act, 1924.

(B. and O. III of 1924.)

Section 6.—For the proviso to sub-section (1) substitute—

"Provided that, where the aerial ropeway is to be constructed or worked in whole or in part over any railway or tramway which

is a railway within the meaning of the Government of India Act, 1935, the order granting the application shall specify the conditions, which shall previously have been approved by the Federal Railway Authority, or the Central Government, of such construction or working."

Section 22.—At the end of the section insert—

"(3) The Central Government may after previous publication make rules for the protection from injury in respect of aerial ropeways of property vested in His Majesty for the purposes of the Central Government, and of property vested in any person for the purposes of any railway or tramway which is a railway for the purposes of the Government of India Act, 1935, and, subject to any rules so made, the Federal Railway Authority may make rules for the protection from injury as aforesaid of property vested in any person for the purposes of any such railway or tramway".

The Bihar and Orissa Legislative Council President's Salary Act, 1925.

(B. and O. I of 1925.)

This Act shall cease to have effect.

The Bihar and Orissa Highways Act, 1926.

(B. and O. III of 1926.)

Section 2.—After "vested in" insert "His Majesty".

The Bihar and Orissa Motor Vehicles Taxation Act, 1930.

(B. and O. II of 1930.)

Section 14.—For "Bihar and Orissa" substitute "the Province".

The Bihar and Orissa Municipal (Emergency Provisions) Act, 1934.

(B. and O. II of 1934.)

Section 4.—For the words from "under rules" to "without the previous sanction of the Governor General" substitute "under the Government of India Act, 1935, the Provincial Legislature has power to impose".

Section 7.—For "vest in the Government" substitute "vest in the Crown for the purposes of the Province".

The Darbhanga Improvement Act, 1934.

(B. and O. IV of 1934.)

Section 58.—Omit "or fines and penalties realised in connection with prosecutions under this Act".

Section 67.—For "vest in the local Government who" substitute "vest in the Crown for the purposes of the Province and the Provincial Government" and for "so vested in the Local Government" substitute "so vested in the Crown".

The Bihar and Orissa Nurses Registration Act, 1935.

(B. and O. I of 1935.)

Throughout the Act, except in the references to the Bihar and Orissa Medical Act, 1916, omit "and Orissa".

The Bihar and Orissa Co-operative Societies Act, 1935.

(B. and O. VI of 1935.)

Sections 23, 53 and 54.—For "Government" substitute "Crown".

Section 64.—In sub-section (2) for "Local Government" substitute "collecting Government" and at the end insert—

"In this sub-section 'collecting Government' has the same meaning as in the Indian Stamp Act, 1899".

SCHEDULE VIII.

CENTRAL PROVINCES ACTS AND BERAR LAWS.

(i) Central Provinces Acts.

In all Central Provinces Acts for "Court of the Judicial Commissioner of the Central Provinces", "Court of the Judicial Commissioner" and "Judicial Commissioner's Court" substitute "High Court".

The Central Provinces General Clauses Act, 1914.

(C. P. I of 1914.)

Section 2.—In the opening words for "Central Provinces Acts" substitute "Provincial Acts".

After clause (4) insert—

"(4*a*) 'Berar' shall have the same meaning as in the Government of India Act, 1935".

Omit clause (5).

For clause (7) substitute—

"(7) 'Central Provinces' shall mean the territories, excluding Berar, for the time being under the administration of the Chief Commissioner or the Governor of the Central Provinces, or the Governor of the Central Provinces and Berar".

In clause (8) after "1909" insert "or the Government of India Act, 1915, or by the local Legislature, or the Governor, of the Central Provinces under the Government of India Act"; but otherwise the clause shall stand unmodified.

After clause (8) insert—

"(8*a*) 'Central Provinces and Berar Act' shall mean an Act made by the Provincial Legislature or the Governor of the Central Provinces and Berar under the Government of India Act, 1935."

Clause (9).—For "Central Provinces Act" substitute "Provincial Act".

At the end of clause (11) insert—

"Provided that in any Provincial Act passed after the commencement of Part III of the Government of India Act, 1935, 'colony' shall not include any Dominion as defined in the Statute of Westminster, 1931, any Province or State forming part of such a Dominion, or British Burma."

In clause (17) for "Central Provinces Act" substitute "Provincial Act".

Omit clause (19).

For clause (21) substitute—

"(21) 'Gazette' shall mean the Official Gazette of the Province".

Omit clauses (23) and (24).

After clause (24) insert—

"(24*a*) 'Governor' shall mean, before the commencement of Part III of the Government of India Act, 1935, the Governor of the Central Provinces, and after the commencement of the said Part III the Governor of Central Provinces and Berar".

Omit clauses (28) and (30).

In clause (37) for "Central Provinces Act" substitute "Provincial Act".

After clause (39) insert—

"(39) (*a*) 'Provincial Act' shall mean a Central Provinces Act or a Central Provinces and Berar Act.

(39) (*b*) 'Provincial Government' shall mean the Provincial Government (as defined in the General Clauses Act, 1897), of the Central Provinces or the Central Provinces and Berar".

In clause (42) for "under the Government of India Act, 1870" substitute "by the Governor of the Central Provinces and Berar under section 92 of the Government of India Act, 1935".

In clauses (44) and (46) for "Central Provinces Act" substitute "Provincial Act".

Section 3.—For sub-section (1) substitute—

"(1) Where any Provincial Act is not expressed to come into operation on a particular day, then it shall come into operation, if it is an Act of the legislature, on the day on which the assent thereto of the Governor, the Governor-General or His Majesty, as the case may require, is first published in the Official Gazette, and if it is an Act of the Governor, on the day on which it is first published as an Act in the Official Gazette".

In sub-section (2) for "Central Provinces Act" substitute "Provincial Act".

Sections 4 to 20.—For "Central Provinces Act" and "Central Provinces Acts" substitute "Provincial Act" and "Provincial Acts".

Section 21.—For "Central Provinces Act" substitute "Provincial Act"; for "on the day on which it is first published in the Gazette after having received the assent of the Governor-General" substitute "immediately on the passing thereof"; and for "after the Act has been published as aforesaid" substitute "after the passing of the Act".

Section 22.—For "Central Provinces Act" substitute "Provincial Act", and for "Local Government" substitute "Central Government or, as the case may be, the Provincial Government".

Sections 23 to 27.—For "Central Provinces Act" substitute "Provincial Act".

After section 27 insert—

"Application to Ordinances and Regulations under the Government of India Act, 1935"

28. The provisions of the Act shall apply—

(a) in relation to any Regulation made by the Governor of the Central Provinces and Berar under section 92 of the Government of India Act, 1935, as they apply in relation to Acts made by the Provincial Legislature of the Central Provinces and Berar; and

(b) in relation to any Ordinance promulgated by the Governor under section 88 or section 89 of the said Act as they apply in relation to Acts made under that Act by the Governor."

The Central Provinces Excise Act, 1915.

(C. P. II of 1915.)

Throughout the Act, except as otherwise provided and except in sections 25 and 26, for "excisable article" and "excisable articles" substitute "intoxicant" and "intoxicants".

Section 2.—For clause (6) substitute—

"(6) 'excisable article' means—

(a) any alcoholic liquor for human consumption; or

(b) any intoxicating drug; or

(c) any medicinal or toilet preparation containing alcohol."

After clause (6) insert—

"(6a) 'excise duty' and 'countervailing duty' mean any such excise duty or countervailing duty, as the case may be, as is mentioned in item 40 of List II in the Seventh Schedule to the Government of India Act, 1935."

For clause (9) substitute—

"(9) 'export' means to take out of the province otherwise than across a customs frontier as defined by the Central Government."

For clause (11) substitute—

"(11) 'import' (except in the phrase "import into British India") means to bring into the province otherwise than across a customs frontier as defined by the Central Government."

After clause (11) insert—

"(11a) 'intoxicant' means any liquor or intoxicating drug".

Section 4.—Omit the proviso.

Section 7.—For "Government officer" substitute "servant of the Crown".

Section 8. Omit the proviso.

Section 9.—For "duty of customs or excise to which it may be liable " substitute "duty to which it may be liable under this Act".

Section 15.—For "imposed under section 25" substitute "payable under Chapter V".

Section 20.—For "Local Government" substitute "Central Government".

Section 25.—For "A duty" substitute "An excise duty or a countervailing duty, as the case may be" and in subsection (3) omit clause (ii).

After section 27 insert—

"Saving for duties being levied at commencement of Part III of the Government of India Act, 1935.

27A.—(1) Until provision to the contrary is made by the Central Legislature, the Provincial Government may continue to levy any duty to which this section applies which it was lawfully levying immediately before the commencement of Part III of the Government of India Act, 1935, under this Chapter as then in force.

(2) The duties to which this section applies are—

(a) any duty on intoxicants which are not excisable articles within the meaning of this Act;

(b) any duty on an excisable article produced outside India and imported into the Province, whether across a customs frontier as defined by the Central Government or not.

(3) Nothing in this section shall authorise the levy by the Provincial Government of any duty which, as between goods manufactured or produced in the Province and similar goods not so manufactured or produced, discriminates in favour of the former, or which, in the case of goods manufactured or produced outside the Province, discriminates between goods manufactured or produced in one locality and similar goods manufactured or produced in another locality."

Sections 32 and 50.—For "Government" substitute "the Crown".

Section 52.—For "excisable" substitute "intoxicant".

Section 64.—For "Government" substitute "Crown".

Section 65.—For "Government" substitute "the Crown".

Section 68.—For "Secretary of State for India in Council" substitute "Crown".

The Central Provinces Medical Registration Act, 1916.

(C. P. I of 1916.)

Section 5.—In subsection (1) after the first "Central Provinces" insert "and Berar".

After section 25 insert the following section—

"26. This Act has effect subject to the provisions of Chapter III of Part V of the Government of India Act, 1935."

Saving for provisions of the Government of India Act, 1935.

The Schedule.—In clause (2), after "India" insert "or Burma", and for "maintained by Government" substitute "maintained by any Government".

The Central Provinces Land Alienation Act, 1916.

(C. P. II of 1916.)

Section 16.—For "Government" substitute "the Crown".

The Central Provinces Courts, Act 1917.

(C. P. I of 1917.)

Omit section 24.

Section 26.—For the words down to "to the Court" substitute "An additional Judge or Judges may, whenever it appears necessary or expedient, be appointed to any District Court, or to the Court".

Omit section 27.

The Central Provinces Land Revenue Act, 1917.

(C. P. II of 1917.)

Throughout the Act, except where otherwise expressly provided, for "Financial Commissioner" substitute "Provincial Government".

Section 2.—In clause (15) for "Government" substitute "the Provincial Government".

In clause (18) for "Government" substitute "the Crown".

Section 3.—Omit "The Chief Commissioner; The Financial Commissioner".

For section 5 substitute—

"5 (1) All Revenue Officers shall be subordinate to the Provincial Government.

(2) All Revenue Officers in a division shall be subordinate to the Commissioner.

(3) Unless the Provincial Government otherwise directs, all Revenue Officers in a district shall be subordinate to the Deputy Commissioner."

Section 6.—Omit "with the previous sanction of the Governor-General in Council".

Section 11.—Omit from "and may delegate" to the end of the section.

Section 12.—Omit "Financial Commissioner".

Section 18.—Omit "the Financial Commissioner".

Section 39.—Omit "the Financial Commissioner".

Section 40.—At the beginning of subsection (1) insert "The Provincial Government and".

Section 53.—For "by Government" substitute "by the Provincial Government".

Section 56.—For "Government" substitute "the Crown".

Section 56A.—For "Legislative Council" substitute "Legislative Assembly".

Sections 63 and 74.—For "Government" substitute "the Crown".

Sections 80 and 93.—For "Government" substitute "the Provincial Government".

Sections 98, 100, 136, 140, 155 and 157.—For "Government" substitute "the Crown".

Section 187.—For "Government" substitute "the Provincial Government".

Section 193.—For "Government Surveyors" substitute "surveyors in the service of the Crown".

Section 202.—In subsection (9) for "Government" substitute "the Crown".

Sections 213, 217, 218 and 219.—For "Government" substitute "the Crown".

Section 220.—Omit "the Governor General in Council"; and for "the Government of India" and "Government" substitute "the Crown".

Sections 222, 224 and 225.—For "Government" substitute "the Crown".

Section 227.—For subsection (1) substitute—

"(1) The Provincial Government may make rules for the purpose of carrying into effect the provisions of this Act and may attach to the breach of any such rule a penalty which may extend to two hundred rupees."

Schedule II.—In Item (26) for "Government or communal land" substitute "land which is Crown property or communal land".

The Central Provinces Tenancy Act, 1920.

(C. P. I of 1920.)

Throughout the Act, except where otherwise expressly provided, for "Financial Commissioner" substitute "Provincial Government".

Section 12.—In subsection (3) for "Government" substitute "the Crown".

Sections 53 and 58.—For "Government" substitute "the Crown."

Section 73.—For "the Secretary of State for India in Council or against any officer of Government" substitute "the Crown or any servant of the Crown".

Section 105.—Omit "Financial Commissioner".

Section 109.—For subsection (1) substitute—

"(1) The Provincial Government may make rules for the purpose of carrying into effect the provisions of this Act and may attach to the breach of any such rule a penalty which may extend to two hundred rupee".

The Central Provinces Village Sanitation and Public Management Act, 1920.

(C. P. II of 1920.)

Section 6.—Omit from "together with" to "within the local area".

The Central Provinces Primary Education Act, 1920

(C. P. III of 1920.)

Section 17.—For "by Government" substitute "by the Provincial Government".

Omit section 19.

The Central Provinces Local Self-Government Act, 1920.

(C. P. IV of 1920.)

Sections 5, 9, 10 and 11.—For "Government officials" and "Government official" substitute "persons in the service of the Crown" and "person in the service of the Crown" and for "Government service" substitute "the service of the Crown".

Section 21.—In clause (*h*) for "17 and 18" substitute "and 17".

Section 42.—For "Government officials" substitute "persons in the service of the Crown".

Section 45.—In subsection (1) omit "under any general or special orders of the Governor-General in Council for the time being in force"; for "servants of Government" substitute "servants of the Provincial Government"; and in proviso (ii) omit "of the Governor-General in Council" and for "service under Government" substitute "service under the Provincial Government".

In subsection (2) for "by the Government" substitute "by the Central or any Provincial Government," and for "any general or special orders of the Governor-General in Council for the time being in force" substitute "the conditions of his service under the Crown".

Section 47.—After "His Majesty" insert "for the purposes of the Province".

Section 51.—At the end of the section insert—

"(3) Nothing in this section shall authorise the imposition of any tax, toll or rate which the Provincial Legislature has no power to impose in the Province under the Government of the Act, 1935:

Provided that a District Council which immediately before the commencement of Part III of the said Act was lawfully levying any such tax, toll or rate under this section as then in force, may continue to levy that tax, toll or rate until provision to the contrary is made by the Central Legislature."

Section 54.—In subsection (1) omit clauses (*b*), (*c*) and (*d*); in clause (*f*) "for Government" substitute "Central Government, the Provincial Government"; and in clause (*g*) omit from the beginning to "thereunder and".

Section 56.—For "to Government" substitute "to the Crown".

Section 64.—After "in His Majesty" insert "for the purposes of the Province".

Section 76.—Omit "in the name of the Secretary of State for India in Council".

Section 79.—In subsection (1) in clause (ix) for "the Government" substitute "the Provincial Government" and in clause (xxx) for "Government officials" substitute "servants of the Crown".

The Central Provinces Village Panchayat Act, 1920.

(C. P. V of 1920.)

Section 7.—For "service of the Government" substitute "service of the Crown".

Section 12.—For "officers of Government" substitute "servants of the Crown".

Section 12A.—For "recognised by Government" substitute "recognised by the Provincial Government".

Section 14.—Omit clauses (2) and (3); in clause (5) for "Government" substitute "the Central Government, the Provincial Government" and in clause (8) for "Government" substitute "the Crown".

Section 32.—For "by or against Government" substitute "by or against the Crown".

Section 68.—For "officers of Government" substitute "servants of the Crown".

The Central Provinces Financial Commissioner's Functions Act, 1921.

(C. P. I of 1921.)

This Act shall cease to have effect.

The Central Provinces Municipalities Act, 1922.

(C. P. II of 1922.)

Section 4.—Omit "without the previous consent of the Governor General in Council".

Section 7.—For "the benefit of the inhabitants of the local area" substitute "the purposes of the Province"; for "the Secretary of State for India in Council" substitute "the Provincial Government" and omit sub-section (2).

Section 8.—In sub-section (1) after "His Majesty" insert "for the purposes of the Province" and for "the Secretary of State for India in Council" substitute "the Provincial Government".

Omit sub-section (2).

Section 15.—For "Government service" substitute "the service of the Crown".

Section 18.—For "Government official" substitute "person in the service of the Crown".

Section 22.—For "Secretary of State for India in Council" substitute "Provincial Government".

Section 25.—In sub-section (2) for "Governor General in Council" substitute "Provincial Government".

In sub-section (3) for "by the Government" substitute "by the Central or any Provincial Government" and for "any general or special orders of the Governor General in Council for the time being in force" substitute "the conditions of his service under the Crown".

Section 38.—In sub-section (1) for "by Government" in clause (*f*) substitute "by the Central Government or the Provincial Government" and for "by Government" in clause (*g*) substitute "by the Crown"; in sub-section (3) for "the Government" substitute "the Crown".

Section 40.—For "the Government" substitute "the Provincial Government".

Section 42.—For "by Government" substitute "by the Crown".

Section 49.—Omit "in the name of the Secretary of State for India in Council".

Section 57.—After "in His Majesty" insert "for the purposes of the Province".

Section 61.—Omit clause (*b*), including the proviso.

Section 66.—In clause (*f*) of sub-section (1) for "Government" substitute "the Crown".

In sub-section (3) omit from "and the imposition" to the end of the sub-section.

In sub-section (4) for "to Government" substitute "to the Crown".

After sub-section (5) insert—

"(6) Nothing in this section shall authorise the imposition of any tax which the Provincial Legislature has no power to impose in the Province under the Government of India Act, 1935:

Provided that a Committee which immediately before the commencement of Part III of the said Act was lawfully levying any such tax under this section as then in force, may continue to levy that tax until provision to the contrary is made by the Central Legislature."

Section 67.—Omit the proviso to sub-section (5).

Section 69.—For "Government" substitute "the Crown".

Section 74.—For "on Government" substitute "on the Crown"; for "by Government" and "by the Government" substitute "by the Crown", and for "a Government or district council servant" substitute "a servant of the Crown or of a district council".

Section 86.—For "to Government" substitute "to the Crown".

The High School Education Act, 1922.

(C. P. III of 1922.)

Preamble and section 1.—After "Central Provinces" insert "and Berar."

Section 3.—For clause (*l*) substitute—

"(*l*) three members elected by the members of the Central Provinces and Berar Legislative Assembly".

Omit sub-section (4).

The Nagpur University Act, 1923.

(C. P. V of 1923.)

For section 7 substitute—

"7.—(1) The Provincial Government shall have the right to cause an inspection to be made by such person or persons as it may direct, of the University, its buildings, laboratories, workshops and equipment and of any college or hostel, and also of the examinations, teaching and other work conducted or done by the University, and to cause an enquiry to be made in like manner in connection with any matter connected with the University. Visitation.

The Provincial Government shall, in every case give notice to the University of its intention to cause an inspection or enquiry to be made, and the University shall be entitled to be represented thereat.

(2) The Provincial Government shall communicate to the Court and to the Executive Council its views and shall, after ascertaining the opinion of the Court and the Executive Council thereon, advise the University on the action to be taken.

(3) The Executive Council shall report to the Provincial Government such action, if any, as it has taken or may propose to take upon the results of the inspection or enquiry.

Such report shall be submitted, within such time as the Provincial Government may direct, through the Court which may express its opinion thereon.

(4) Where the Executive Council does not, within a reasonable time, take action to the satisfaction of the Provincial Government, the Provincial Government may, after considering any explanation furnished, or representation made by the Court and the Executive Council, issue such instructions as it may think fit, and the Executive Council shall comply therewith."

Section 9.—For "Governor of the Central Provinces" substitute "Governor of the Central Provinces and Berar".

Section 16.—Omit "Members of the Executive Council and" and after "Central Provinces" insert "and Berar".

Section 33.—For "Governor General in Council" substitute "Provincial Government".

Section 36.—For "to the Local Government and to the visitor" substitute "and to the Provincial Government".

Section 46.—For "Governor General in Council" substitute "Provincial Government".

Section 47.—At the beginning insert—"(1) Subject to the provisions of this section"; for "Berar or the Feudatory States of the Central Provinces" substitute "and Berar"; after the third and fourth "Central Provinces" insert "and Berar"; and at the end of the section insert—

"(2) The Central Government, with the concurrence of the Provincial Government, may authorise the University to admit to its privileges an institution within any State which, at the commencement of this Act, was a Feudatory State of the Central Provinces and while any such direction is in force this Act shall have effect with the following modifications—

(*a*) references to the Provincial Government shall be references to the Central Government; and

(*b*) the Chancellor of the University shall be such person as the Governor General, exercising his individual judgment, may nominate."

The Schedule, Statute 2.—For clause (1) (*v*) substitute—

"(*v*) five members of the Legislative Assembly of the Province elected by the members thereof."

Statute 13.—For the words "the Feudatory States" substitute "any State which at the commencement of the Act was a Feudatory State."

The Central Provinces Presidents' Salary Act, 1925.

(C. P. I of 1925.)

This Act shall cease to have effect.

The Central Provinces Weights and Measures of Capacity Act, 1928.

(C. P. II of 1928.)

Throughout the Act for "Local Government" substitute "appropriate Government".

After section 15 insert—

"Definition of appropriate Government.

15A. In this Act 'the appropriate Government' means, in relation to standards of weight, the Central Government, and in relation to measures of capacity, the Provincial Government."

The Central Provinces Consolidation of Holdings Act, 1928.

(C. P. VIII of 1928.)

Section 1.—In the proviso to sub-section (3) for "Central Provinces Legislative Council" substitute "Legislative Assembly of the Province".

The Central Provinces Borstal Act, 1928.

(C. P. IX of 1928.)

Section 4.—For the words from "any member of the Central Provinces Legislative Council" to the end of the section substitute "any member of the Legislative Assembly of the Province, or by any member of either chamber of the Central Legislature chosen to represent the whole or any part of the Province".

Section 18.—For "Government officer or" substitute "servant of the Crown or any".

Section 27.—In clause (*a*) for "Governor-General in Council" substitute "Central Government or of the Crown Representative".

For clauses (*b*) and (*c*) substitute—

"(*b*) by any Court or tribunal in any Indian State—

(i) if the presiding Judge or, where the Court or tribunal consists of two or more Judges, at least one of the Judges, is a servant of the Crown authorised to sit as such Judge by, or by the Ruler of, that State, or by the Central Government or the Crown Representative, and

(ii) if the reception, or detention in the Province of persons ordered to be detained by any such Court or tribunal has been authorised by general or special order of the Provincial Government; or

(*c*) by any other Court or tribunal in the territories of any Indian State with the previous sanction of the Provincial Government in the case of each order."

Section 31.—Omit "or the Governor-General".

The Central Provinces Children Act, 1928.

(C. P. X of 1928.)

Section 40.—For the words from "or by any member of the Central Provinces Legislative Council" to the end of the section substitute "or by any member of the Legislative Assembly of the Province or by any member of either Chamber of the Central Legislature chosen to represent the whole or any part of the Province."

Section 54.—Omit sub-section (3).

The Central Provinces Opium Smoking Act, 1929.

(C. P. IV of 1929.)

Sections 20 and 21.—For "the Secretary of State for India in Council" substitute "the Crown".

The Central Provinces Settlement Act, 1929.

(C. P. VI of 1929.)

Section 3.—Omit "except with the previous sanction of the Governor-General in Council".

The Central Provinces Juvenile Smoking Act, 1929.

(C. P. VIII of 1929.)

Section 5.—For "Legislative Council" substitute "Legislative Assembly".

The Central Provinces Irrigation Act, 1931.

(C. P. III of 1931.)

Sections 4, 6 and 7.—For "Government" substitute "the Crown".

Section 11.—For "Government" substitute "the Provincial Government".

Sections 15 and 26 to 30.—For "Government" substitute "the Crown".

Section 35.—In sub-section (3) for "Government shall refund" substitute "the Provincial Government shall refund", but save as aforesaid throughout the section for "Government" substitute "the Crown".

Section 45.—For "Government" substitute "the Provincial Government".

Section 47.—For "Government" substitute "the Crown".

Section 55.—For "Government" substitute "the Provincial Government".

Sections 56, 57, 64 and 68.—For "Government" substitute "the Crown".

Sections 70, 72, 73, 74, 77, 78 and 82.—For "Government" substitute "the Provincial Government".

Section 92.—For "Central Provinces Legislative Council" substitute "Legislative Assembly of the Province" and for "the Council" and "the Legislative Council" substitute "the Assembly".

The Central Provinces Cotton Market Act, 1932.

(C. P. IX of 1932.)

Section 6.—For "the Central Provinces Legislative Council" substitute "the Legislative Assembly of the Province" and for "the Council" and "the Legislative Council" substitute "the Assembly".

Section 16.—For "in Government" substitute "in the Crown for the purposes of the Province".

Section 20.—Omit the first sentence.

The Central Provinces Debt Conciliation Act, 1933.

(C. P. II of 1933.)

Section 13D.—For "the Secretary of State in Council" and "Government" substitute "the Crown".

The Central Provinces Local Fund Audit Act, 1933.

(C. P. IX of 1933.)

Section 3.—For "Government" substitute "Provincial Government".

Section 17.—For "Central Provinces Legislative Council" substitute "Legislative Assembly of the Province" and for "the Council" and "the Legislative Council" substitute "the Assembly".

The Central Provinces State Aid to Industries Act, 1933.

(C. P. XII of 1933.)

Preamble and section 1.—After "Central Provinces" insert "and Berar."

Section 3.—For "Central Provinces Legislative Council" substitute "Legislative Assembly of the Province"; omit "and Industry (including Mining)" and for "non-official members of the Council" substitute "members of the Assembly".

Section 6.—For "of the Local Government" substitute "vested in the Crown for the purposes of the Province" and for "Government officials" substitute "persons in the service of the Crown".

Section 7.—After "British India" insert "or Berar."

Omit section 8.

Section 9.—Omit "or the authority to which it has delegated the power to give state aid, as the case may be", and "or the said authority, as the case may be,".

Section 20.—For "the Government" substitute "the Provincial Government" and for "Government officials" substitute "persons in the service of the Crown".

Section 24.—For "Government officer" substitute "servant of the Crown".

Section 25.—In sub-section (2) omit clause (*d*).

The Central Provinces Moneylenders Act, 1934.

(C. P. XIII of 1934.)

Section 2.—For "Indian Legislature" substitute "Central Legislature" and in clause (vii) (*c*) for "Government" substitute "any Government".

The Central Provinces Cattle Diseases Act, 1934.

(C. P. XVI of 1934.)

Section 13.—For "Government officers" substitute "servants of the Crown"; for "the Central Provinces Legislative Council" substitute "the Legislative Assembly of the Province" and for "the Council" and "the Legislative Council" substitute "the Assembly".

The Central Provinces Game Act, 1935.

(C. P. XV of 1935.)

Section 5.—For "Government servant" substitute "servant of the Crown".

Section 9.—For "Local Government" substitute "Provincial Government", but save as aforesaid the section shall stand unmodified.

Section 13.—For "the Central Provinces Legislative Council" substitute "the Legislative Assembly of the Province" and for "the Council" and "the Legislative Council" substitute "the Assembly".

The Wild Birds and Animals Protection (Central Provinces Amendment) Act, 1935.

(C. P. XXVII of 1935.)

Section 6.—For "Government servant" substitute "servant of the Crown".

Section 11.—For "of Government" substitute "of the Crown" and at the end of the section insert—

"(3) Notwithstanding anything in this section, the Provincial Government shall not make any declaration with respect to any area which is vested in His Majesty for purposes other than those of the Province except with the consent of the Government concerned."

The Central Provinces Agricultural Produce Market Act, 1935.

(C. P. XXIX of 1935.)

Section 4.—For "Government servant" substitute "servant of the Crown".

Section 5.—For "the Central Provinces Legislative Council" substitute "the Legislative Assembly of the Province" and for "the Council" and "the Legislative Council" substitute "the Assembly".

Section 15.—For "vest in Government" substitute "vest in His Majesty for the purposes of the Province".

Section 19.—Omit the first sentence.

The Central Provinces Probation of Offenders Act, 1936.

(C. P. I of 1936.)

Section 12.—In sub-section (1) for "District Magistrate may" substitute "Provincial Government may".

Omit sub-section (4).

The Cotton Ginning and Pressing Factories (Central Provinces Amendment) Act, 1936.

(C. P. XXIV of 1936.)

Section 4.—For "the Governor-General in Council may direct" substitute "it thinks fit".

Section 5A.—For "Central Provinces Legislative Council" substitute "Legislative Assembly of the Province" and for "the Council" and "the Legislative Council" substitute "the Assembly".

The Central Provinces Highway Act, 1936.

(C. P. XXXIV of 1936.)

Section 3.—In sub-section (3) for "Council" substitute "Assembly".

The Central Provinces Agricultural Pests and Diseases Act, 1936.

(C. P. XXXV of 1936.)

Section 18.—In sub-section (3) for "the Central Provinces Legislative Council" substitute "the Legislative Assembly of the Province" and for "the Council" and "the Legislative Council" substitute "the Assembly".

(ii) Berar Laws.

(Notification No. 3510 I.B. of 3rd November, 1913.)

The words preceding the provisos shall stand unmodified.

For the first two provisos substitute—

"Provided, first, that, in the enactments as so applied except where the context otherwise requires, references to British India or the territories subject to a Local Government or a Provincial Government shall be read as referring to Berar:

Provided, secondly that the said enactments as so applied shall be construed as if there was made therein the further modifications and restrictions set forth in the said Schedule".

After section 2 insert—

"3. References in this notification, by whatever form of words, to any Indian law shall, after the commencement of Part III of the Government of India Act, 1935, be construed as references to that law as adapted or modified under section 293 of that Act".

First Schedule.—In the entries in Column 2 relating to the Bengal Wills and Intestacy Regulation, 1799, for "Judicial Commissioner" substitute "High Court" and for "the Local Government of the Central Provinces" substitute "the Provincial Government".

In the entries in column 2 relating to section 75 of the Indian Penal Code omit "and in clause (*b*), after the word 'territories' the words 'other than Berar' shall be inserted".

In the entry in column 2 relating to the Indian Arms Act, 1878, for "Local Government" substitute "Central Government".

Omit the entries in column 2 relating to the Indian Explosives Act, 1884, the Bankers' Books Evidence Act, 1891, the Reformatory Schools Act, 1899, and the Indian Stamp Act, 1899.

In the entries in column 2 relating to the Central Provinces Court of Wards Act, 1899—

(*a*) in the definition of "pension holder" for "Government" substitute "the Crown";

(*b*) in the proviso added to section 12(1) for "under the administration of the Government" substitute "in which the Central Government or the Crown Representative exercises jurisdiction";

(*c*) in the new section 13A for "Government" substitute "the Crown".

Omit the entries in column 2 relating to the Prisoners Act, 1900.

In the entries in column 2 relating to the Code of Civil Procedure, 1908, in the new section 43 for "Governor-General in Council" substitute "the Central Government or the Crown Representative".

In the entries in column 2 relating to the Indian Electricity Act, 1910, omit those relating to sections 35 and 38.

Omit the entries in column 2 relating to the Central Provinces Excise Act, 1915, and the Central Provinces Medical Registration Act, 1916.

In the entries in column 2 relating to the Central Provinces Courts Act, 1917, omit those relating to section 15.

Omit the entries in column 2 relating to the Indian Election Offences and Enquiries Act, 1920.

In the entries in column 2 relating to the Central Provinces Local Self-Government Act, 1920, omit entry 10 [which adds a clause (*hh*) to section 54(1)].

In the entries in column 2 relating to the Central Provinces Village Panchayat Act, 1920, for "the Governor in Council of the Central Provinces" substitute "Provincial Government".

Omit the references in both columns to the Central Provinces Financial Commissioner's Functions Act, 1921.

In the entries in column 2 relating to the Indian Income Tax Act, 1922, omit No. (3) [which adds certain words to section 64(3)].

Omit the entries in column 2 relating to the Indian Cotton Cess Act, 1923.

In the entries in column 2 relating to the Indian Mines Act, 1923, omit the entry relating to section 30.

In the entries in column 2 relating to the Indian Boilers Act, 1923, for "Governor-General in Council" substitute "Provincial Government" and for "British India" substitute "the Central Provinces".

In the entries in column 2 relating to the Cotton Transport Act, 1923, omit the entry relating to section 8.

Omit the entries in column 2 relating to the Central Provinces High School Education Act, 1922, and the Nagpur University Act, 1923.

In the entries in column 2 relating to the Central Provinces Municipalities Act, 1922, omit entry (3) and in entry (4) for "(6)" and "(7)" substitute "(5*a*)" and "(5*b*)".

In the entry in column 2 relating to the Indian Succession Act, 1925, for "which is under the administration of the Governor-General in Council" substitute "in which the Central Government or the Crown Representative exercises jurisdiction".

In the entries in column 2 relating to the Central Provinces Borstal Act, 1928, omit those relating to clauses (*b*) and (*c*) of section 27 and those relating to section 30.

Omit the entries in column 2 relating to the Dangerous Drugs Act, 1930, and the Central Provinces State Aid to Industries Act, 1933.

The Berar Small Cause Courts Law, 1905.

(Notification 922 dated 16th June, 1905.)

Section 1.—For sub-section (2) substitute—

"(2) they extend to the whole of Berar; and"

Section 4.—Omit "with the previous sanction of the Governor-General in Council".

Section 5.—For "the Chief Commissioner shall, by order in writing, appoint" substitute "there shall be appointed, by order in writing".

Section 6.—For "Judicial Commissioner of the Central Provinces (hereinafter referred to as the 'Judicial Commissioner')" substitute "High Court".

Section 6A.—For "The Chief Commissioner may, by order in writing, appoint" substitute "There may be appointed, by order in writing".

Omit section 7.

Section 7A.—For "The Chief Commissioner may appoint" substitute "There may be appointed" and omit sub-section (5).

Omit section 8.

Sections 9, 16 and 18.—For "Judicial Commissioner" substitute "High Court".

Section 21.—For "the Chief Commissioner from appointing" substitute "the appointment of ".

The Berar Alienated Villages Tenancy Law, 1921.

(Notification No. 22996—I. B dated 14th November, 1921.)

Section 1.—For "by Government" substitute "by the Crown".

Section 3.—In clause (10) for "Government" substitute "the Crown".

Section 14.—For "the Secretary of State for India in Council" and "Government" substitute "the Crown".

Sections 42 and 48.—For "Government" substitute "the Crown".

The Berar Land Revenue Code, 1928.

(Notification 523 I dated 25th September, 1928.)

Section 2.—In clauses (2) and (14) for "Government" substitute "the Crown".

Section 9.—Omit "and may delegate to the Commissioner his power of appointing them".

Section 13.—For "Government servant" substitute "servant of the Crown".

Section 41.—In sub-section (1) for "the Government" substitute "the Crown for the purposes of the Province" and in sub-sections (2) and (3) for "Government" substitute "the Crown".

Section 43.—For "Government" substitute "Crown".

Section 44.—In sub-section (1) for "by Government" substitute "by the Crown" and for "in Government, which" substitute "in the Crown for the purposes of the Province, and the Provincial Government".

In sub-section (3) for "the Government" substitute "the Crown".

In sub-section (4) for "Government or its assignees" substitute "the Provincial Government or the assignees from the Crown, as the case may be".

In sub-sections (5) and (6) for "Government" substitute "the Crown".

Section 45.—For "Government" substitute "the Crown for the purposes of the Province".

Sections 47, 48 and 49.—For "Government" substitute "the Crown".

Section 52.—For "the Government" substitute "any Government".

Section 55.—Omit sub-section (2) and after "lessees from Government" insert "or lessees from the Crown".

Sections 59 and 60.—For "Government" substitute "the Crown".

Section 67.—For "Government" substitute "Crown for the purposes of the Province"

Section 72.—For "the present Government" substitute "the Crown".

Section 96 For "Government" substitute "the Crown".

Section 100.—Omit "except with the sanction of the Governor-General in Council."

Section 111.—For "Government" substitute "the Crown".

Section 112.—For "Court of the Judicial Commissioner" substitute "High Court".

Section 124.—For "Government" substitute "Crown".

Sections 132, 138, 144, 162 and 164. For "Government" substitute "the Crown"

Section 172.—At the end of section 172 insert—

"(4) After the commencement of Part III of the Government of India Act, 1935,, only such cesses shall be leviable under this section as were being levied immediately before that date and any such cesses shall only be leviable until provision to the contrary is made by the Central Legislature"

Section 189.—For "the present or former Government" substitute "the Crown or any former Government" and for "the property of Government" substitute "the property of the Crown for the purposes of the Province".

Section 190.—For "in Government" substitute "in the Crown for the purposes of the Province".

Section 192.—Omit "the Governor-General in Council" and for "the Government" or "Government" substitute "the Crown".

SCHEDULE IX.

ASSAM ACTS.

(Including Eastern Bengal and Assam Acts as in force in Assam.)

The Eastern Bengal and Assam General Clauses Act, 1909.

(E. B. & A. I of 1909.)

This Act shall cease to have effect.

The Eastern Bengal and Assam Excise Act, 1910.

(E. B. & A. I of 1910.)

Throughout the Act, except as otherwise provided and except in sections 21 and 22, for "excisable article" and "excisable articles" substitute "intoxicant" and "intoxicants".

Section 3.—For clause (7) substitute—

"(7) 'excisable article' means

(*a*) any alcoholic liquor for human consumption; or

(*b*) any intoxicating drug; or

(*c*) any medicinal or toilet preparation containing alcohol".

After clause (7) insert—

"(7*a*) 'excise duty' and 'countervailing duty' mean any such excise duty or countervailing duty, as the case may be, as is mentioned in item 40 of List II in the Seventh Schedule to the Government of India Act, 1935".

For clauses (11) and (12) substitute—

"(11) 'export' means to take out of the territories to which this Act applies, otherwise than across a customs frontier as defined by the Central Government".

"(12) 'import' (except in the phrase "import into British India") means to bring into the territories to which this Act applies otherwise than across a customs frontier as defined by the Central Government".

After clause (12) insert—

"(12*a*) 'intoxicant' means any liquor or intoxicating drug".

Section 8.—For "Government officer" substitute "servant of the Crown".

Section 10.—For "imposed under section 21" substitute "payable under Chapter V".

Section 11.—For "imposed under section 21, or" substitute "payable under Chapter V" and omit clause (*b*).

Section 12.—Omit the proviso.

Section 20.—For "Local Government" substitute "Central Government".

Section 21.—For "A duty" substitute "An excise duty or a countervailing duty, as the case may be," and omit proviso (2).

After section 23 insert—

"23A.—(1) Until provision to the contrary is made by the Central Legislature, the Provincial Government may continue to levy any duty to which this section applies which it was lawfully levying immediately before the commencement of Part III of the Government of India Act, 1935, under this Chapter as then in force.

Saving for duties being levied at commencement of Part III of the Government of India Act, 1935

(2) The duties to which this section applies are

(*a*) any duty on intoxicants which are not excisable articles within the meaning of this Act;

(*b*) any duty on an excisable article produced outside India and imported into the territories to which this Act applies whether across a customs frontier as defined by the Central Government or not.

(3) Nothing in this section shall authorise the levy by the Provincial Government of any duty which, as between goods manufactured or produced in the Province and similar goods not so manufactured or produced, discriminates in favour of the former, or which, in the case of goods manufactured or produced outside the Province, discriminates between goods manufactured or produced in one locality and similar goods manufactured or produced in another locality".

Section 30.—In sub-section (3) for "Government" substitute "the Crown".

Section 35.—For "Government" substitute "the Provincial Government".

Sections 76 and 77.—For "Secretary of State for India in Council" substitute "Crown".

The Jalpaiguri Labour Act, 1912.

(E. B. & A. II of 1912.)

Section 2.—Omit "(*a*) to the district of Jalpaiguri and (*b*)", "other", "Eastern Bengal and", and "with the previous sanction of the Governor-General in Council".

Section 3.—Omit from "(i) in the territories" to "and (ii)" and for "clause (*b*) of the said section" substitute "section 2".

The Assam Local Self-Government Act, 1915.

(Assam I of 1915.)

Throughout the Act for "Government servant", "Government officer", "servant of Government" and "officer of Government" substitute "servant of the Crown", and for the plural of any of those expressions substitute "servants of the Crown".

Section 2.—In clause (15) for "the rules for the time being in force in regard to elections to representative institutions under the control of the Government of India or a Local Government" substitute "the Acts and Orders relating to elections to the Provincial Legislature".

Section 4.—For "a Provincial Legislative Council, the Legislative Assembly or the Council of State" substitute "to any Legislature in British India".

Section 7.—For "a Provincial Legislative Council, the Legislative Assembly or the Council of State" substitute "or to any Legislature in British India".

Section 23.—In sub-section (2) omit clause (*b*)

For clause (*c*) of that sub-section substitute—

"(*c*) all sums levied or accruing within the sub-division to the Board".

Omit clauses (*d*) and (*e*).

In clause (*f*) for "vested in or placed under the control and administration of" substitute "or vested in".

Omit clause (*jj*).

In clause (*k*) after "control" insert "not being the property of the Crown".

Section 29.- After "His Majesty" insert "for the purposes of the Province".

Section 36.—In clause (*b*) of subsection (1) omit "or the Government of India".

In subsection (2) after "Government" insert "concerned".

Section 52D.—Omit "included in Schedule II of the Scheduled Taxes Rules under Government of India Act,", and at the end of the section insert—

"(2) Nothing in this section shall authorise the imposition of any tax which the Provincial Legislature has no power to impose in the Province under the Government of India Act, 1935:

Provided that a Board which immediately before the commencement of Part III of the said Act was lawfully levying any such tax under this section as then in force, may continue to levy that tax until provision to the contrary is made by the Central Legislature."

Section 91.—In clause (*j*) for "Government" substitute "Crown".

Section 94.—For "Secretary of State for India in Council" substitute "Provincial Government".

The Assam General Clauses Act, 1915.

(Assam II of 1915.)

Section 4.—Omit clause (4).

For clause (5) substitute—

"(5) 'Assam Act' shall mean an Act made by the Chief Commissioner of Assam in Council under the Indian Councils Act, 1861 to 1909 or any of those Acts, or under the Government of India Act, 1915, or by the local Legislature of Assam under the Government of India Act, or by the Provincial Legislature or the Governor of Assam under the Government of India Act, 1935."

Omit clause (8).

At the end of clause (11) insert—

"Provided that in any Act passed or made after the commencement of Part III of the Government of India Act, 1935, 'colony' shall not include any Dominion as defined in the Statute of Westminster, 1931, any province or State forming part of such a Dominion or British Burma".

Clause (19) shall stand unmodified.

Omit clauses (24), (27) and (32).

For clause (35) substitute—

"(35) 'Local Administration' shall mean the Provincial Government".

In clause (46), in sub-clause (*a*) for "Government" substitute "Crown" and in sub-clause (*b*) omit "of the Government of India or of any local Government", "by the Government of India or the local Government" and "and extradition".

Omit clause (48).

Section 5.—In subsection (1) for the words from "on the day" to "Government of India Act" substitute "if it is an Act of the Legislature, on the day on which the assent thereto of the Governor, the Governor-General or His Majesty, as the case may require, is first published in the Official Gazette and if it is an Act of the Governor on the day on which, it is first published as an Act in the Official Gazette".

Section 24.—For "the day on which the assent thereto of the Governor-General is first published in the Gazette" and "the assent of the Governor-General has been published as aforesaid" substitute "the passing thereof".

Section 25.—For "Local Government" substitute "Central Government or, as the case may be, the Provincial Government".

Section 32.—Omit "or Eastern Bengal and Assam Act".

After section 32 insert—

"33. The provisions of this Act shall apply in relation to any Eastern Bengal and Assam Act as in force in Assam and any Regulation made by the Governor of Assam under section 92 of the Government of India Act, 1935, as they apply in relation to Assam Acts other than Acts made by the Governor of Assam under section 90 of the said Act, and shall apply in relation to any Ordinance promulgated by the Governor under section 88 or section 89 of the said Act, as they apply in relation to Acts made by the Governor under the said section 90".

Application to Eastern Bengal and Assam Acts and Ordinances and Regulations under the Government of India Act, 1935.

The Assam Medical Act, 1916.

(Assam I of 1916.)

After section 33 insert—

"Saving for provisions of Government of India Act, 1935

34. This Act has effect subject to the provisions of chapter III of Part V of the Government of India Act, 1935."

The Schedule.—For "Indian Legislature" substitute "Central Legislature".

In clause (3), after "India" insert "or Burma"; for "by the Government" substitute "by the Government concerned"; and for "maintained by Government" substitute "maintained by any Government".

The Deputy President's Salary Act, 1921.

(Assam I of 1921.)

This Act shall cease to have effect.

The Assam Municipal Act, 1923.

(Assam I of 1923.)

Throughout the Act for "servant of Government", "officer of the Government" and "officer of Government" substitute "servant of the Crown" and for "servants of Government", "officers of Government" and "Government officers" substitute "servants of the Crown".

Section 4.—For the first proviso to subsection (1) substitute "Provided that no municipality under this Act shall include any military cantonment or part of a military cantonment".

Section 7.—For "Secretary of State for India in Council" substitute "Provincial Government"; in subsection (1) for "for the benefit of the inhabitants of the local area" substitute "for the purposes of the Province"; in subsection (2) after "His Majesty" insert "for the purposes of the Province" and omit subsection (3).

Section 12.—Omit "with the approval of the Governor General in Council".

Section 13c.—For "Assam Electoral Rules" substitute "Acts, Orders and Rules relating to elections to the Provincial Legislature".

Section 45.—For the first "Governor General in Council" substitute "Provincial Government" and for "by any general or special orders of the Governor General in Council" substitute "by the conditions of their service under the Crown".

Section 47.—For "Secretary of State for India in Council" substitute "Provincial Government".

Section 51.—Omit clause (*c*) of subsection (2).

Section 52.—For "under any general or special orders of the Governor General in Council for the time being in force or under such orders as the Local Government may make" substitute " , by the conditions of their service under the Crown, to be made by them or on their behalf".

Section 53.—Omit "with the sanction of the Governor General in Council, when such sanction is necessary under any law, or when such sanction is not necessary".

Section 59.—In subsection (1) omit "included in Schedule II of the Scheduled Taxes Rules".

At the end of the section insert—

"(3) Nothing in this section shall authorise the imposition of any tax which the Provincial Legislature has no power to impose in the Province under the Government of India Act, 1935:

Proviedd that a Board which immediately before the commencement of Part III of the said Act was lawfully levying any such tax under this section as then in force, may continue to levy that tax until provision to the contrary is made by the Central Legislature."

Section 109.—In clause (*c*) for "to Government" substitute "to the Crown" and for "the Government" substitute "any Government."

Section 120.—At the end insert—

"Provided that, where one of the local authorities is a cantonment authority the decision of the Provincial Government shall be subject to the concurrence of the Central Government."

Section 121.—For "Government" substitute "Crown".

Section 128.—At the end insert—

"Provided that, where one of the local authorities is a cantonment authority, the decision of the Provincial Government shall be subject to the concurrence of the Central Government".

Section 131.—At the end insert—

"Provided that, where one of the local authorities concerned is a cantonment authority, the powers of the Provincial Government under this section shall be exercisable only with the concurrence of the Central Government".

Section 294.—For "Government" substitute "Crown for the purposes of the Province".

Section 295.—At the end insert—

"(5) Where a cantonment authority is a party to a dispute, the powers of the Provincial Government under this section shall be exercisable only with the concurrence of the Central Government".

Section 296.—In subsection (2) (vii) for "Government" substitute "the Provincial Government".

In subsection (3) for "the Legislative Council" substitute "both Chambers of the Provincial Legislature" and for "the Council" substitute "the Chambers, by a Resolution in which both Chambers concur".

Section 299.—At the end of the section insert—

"(4) In relation to byelaws as respects standard weights the powers of the Provincial Government under this section shall be powers of the Central Government".

Section 327.—For "the Government" substitute "any Government".

The Assam Students and Juvenile Smoking Act, 1923.

(Assam II of 1923.)

Section 4.—After "Council" insert "or Legislative Assembly".

The Assam President's Salary Act, 1924.

(Assam II of 1924.)

This Act shall cease to have effect.

The Assam Water-Hyacinth Act, 1926.

(Assam III of 1926.)

Section 6.—For "of Government" substitute "of the Provincial Government".

Section 7.—For "Government" substitute "the Crown".

Section 11.—Omit "with the previous sanction of the Governor-General in Council".

The Assam Temperance Act, 1926.

(Assam IV of 1926.)

Section 13.—Omit the proviso.

Section 16.—For "the Legislative Council" substitute "both Chambers of the Provincial Legislature".

After section 16 insert—

"Cantonments.

17. As repects cantonments, the powers conferred by this Act on the Provincial Government shall be powers of the Central Government."

The Assam Primary Education Act, 1926.

(Assam V of 1926.)

Section 3.—For "the Government" substitute "the Provincial Government", and for "by Government" substitute "by the Provincial Government".

Section 6.—In subsection (4) omit "together with all fines and penalties realised under sections 18 and 19".

Section 7.—For "the Legislative Council" substitute "both Chambers of the Provincial Legislature" and for "the Council" substitute "either Chamber".

Section 13.—For "the Legislative Council" substitute "both Chambers of the Provincial Legislature".

Section 15.—For "the Government" substitute "the Provincial Government".

Omit section 21.

The Assam Rural Self-Government Act, 1926

(Assam VII of 1926.)

Section 17.—Omit clause (ii).

Section 19.—Omit clause (v).

Section 27.—For "property of the Government" substitute "property of the Crown".

Sections 29 and 30.—For "officer of Government" substitute "servant of the Crown".

Section 51.—Omit subsection (4).

Section 54.—For "Government" substitute "the Crown".

Sections 69 and 71.—For "village fund of the village where the cause of action arose" substitute "revenues of the Province".

The Assam Opium Smoking Act, 1927.

(Assam III of 1927.)

Sections 19 and 20.—For "Secretary of State for India in Council" substitute "Crown".

Section 22.—For "out of fines imposed under this Act" substitute "to officers and informers".

The Goalpara Tenancy Act, 1929.

(Assam I of 1929.)

Section 1.—For "the Assam Legislative Council" substitute "both Chambers of the Provincial Legislature".

Section 4.—In clause (21) for "the Government" substitute "the Crown".

Section 17.—For "for the Government" substitute "for any Government"; for "of Government" substitute "of the Crown" and for "by the Government" substitute "by the Crown".

Section 55.—For "Secretary of State for India in Council" substitute "Crown" and for "officer of the Government" substitute "servant of the Crown".

Section 117.—For "the Government" substitute "the Provincial Government".

Section 125.—Omit "with the approval of the Governor General in Council".

Section 182.—For "the Government" substitute "the Crown".

The Assam Local Fund (Accounts and Audit) Act, 1930.

(Assam II of 1930.)

Section 2.—After "includes any fund" insert "(not being a cantonment fund)".

The Bijni Succession Act, 1931.

(Assam II of 1931.)

Throughout the Act "Governor" shall stand unmodified.

After section 12 insert—

"Governor to act in his discretion.

12A. In exercising his functions under the foregoing provisions of this Act the Governor shall act in his discretion."

The Assam Pure Food Act, 1932.

(Assam IV of 1932.)

Omit section 21.

The Assam Criminal Law Amendment Act, 1934.

(Assam III of 1934.)

Throughout the Act, save as expressly provided, for "Local Government" substitute "appropriate Government" and for "officer of Government" and "officer of the Government" substitute "servant of the Crown".

Section 2.—At the end insert—"and 'the appropriate Government' means, in relation to any of the matters enumerated in list I in the Seventh Schedule to the Government of India Act, 1935, the Central Government, and in relation to any other matter, the Provincial Government".

Section 4.—For "under sub-section (3) of section 101 of the Government of India Act" substitute "Section 220 of the Government of India Act, 1935".

Section 30.—For the first and the second "Local Government" substitute "Provincial Government" and for the third "Local Government" substitute "Government by which the Commissioners were appointed".

The Assam (Temporarily-Settled Districts) Tenancy Act, 1935.

(Assam III of 1935.)

Section 2.—In sub-section (1), in clause (*b*) for "the Government" substitute "any Government"; in clause (*c*) for "the Government" substitute "the Crown"; and in clause (*d*) for "the Government" substitute "any Government" and for "of Government" substitute "of the Crown".

In sub-section (3) for "the Assam Legislative Council" substitute "both Chambers of the Provincial Legislature".

Section 3.—In clause (3) for "Government" substitute "the Crown"; in clause (4) for "the Government" substitute "any Government", and in clause (11) for "Government" substitute "the Crown".

Section 51.—For "Government" substitute "the Provincial Government".

Section 56.—For "Secretary of State for India in Council" and "Government" substitute "Crown".

Section 77.—For "Government" substitute "the Provincial Government".

Section 91.—Omit "with the approval of the Governor General in Council".

Section 102.—For "Governor of Assam in Council" substitute "Provincial Government".

The Assam Moslem Marriages and Divorce Registration Act, 1935.

(Assam IX of 1935.)

Section 5.—For "Government" substitute "Provincial Government".

Section 17.—For "by Government" and "to Government" substitute "by the Provincial Government" and "to the Provincial Government".

The Assam Local Board Elections (Emergency Provisions) Act, 1936.

(Assam VII of 1936.)

Section 2.—For "Government" substitute "the Provincial Government".

The Assam Land Revenue Re-Assessment Act, 1936.

(Assam VIII of 1936.)

Section 26.—After "Legislative Council" insert "or of the Assam Legislative Assembly, whichever first occurs" and after "said Council" insert "or Assembly".

The Assam Motor Vehicles Taxation Act, 1936.

(Assam IX of 1936.)

Section 2.—For "by the Government" substitute "by any Government".

Section 17.—For "Local Government" substitute "tribunal to be appointed under section 296 of the Government of India Act, 1935".

Section 18.—For "officer of Government" substitute "servant of the Crown".

Omit section 21.

The Sylhet Tenancy Act, 1936.

(Assam XI of 1936.)

Section 1.—In sub-section (3), for "the Government" in clause (ii) substitute "any Government"; for "the Government" in clauses (iii) and (iv) substitute "the Crown"; and for "by Government" in clause (vi) substitute "by any Government".

Section 3.—For "the Government" substitute "the Crown" and for "property of Government" substitute "property of the Crown".

Section 61.—For "by Government" substitute "by the Provincial Government".

Section 80.—For "Secretary of State for India in Council" and for "Government" substitute "Crown".

Section 148.—For "Governor-General in Council" substitute "Provincial Government".

Section 210.—For "to the Government" substitute "to the Crown".

Section 214.—Omit "to be credited to the local Boards"

SCHEDULE X.

NORTH-WEST FRONTIER PROVINCE ACTS.

The North-West Frontier Province Legislative Council (Deputy President Salary) Act, 1932.

(N. W. F. P. I of 1932.)

This Act shall cease to have effect.

The North-West Frontier Province General Clauses Act, 1932.

(N. W. F. P. II of 1932.)

Section 4.—Omit clause (5).

At the end of clause (9) insert—

"Provided that in any Act passed after the commencement of Part III of the Government of India Act, 1935, 'colony' shall not include any Dominion as defined in the Statute of Westminster, 1931, any Province or State forming part of such a Dominion or British Burma."

Omit clauses (19), (22), (27), (30) and (34).

At the end of clause (35) insert "or by the Provincial Legislature or the Governor of the North-West Frontier Province under the Government of India Act, 1935".

In clause (41) for "Government" in sub-clause (*a*) substitute "Crown" and in sub-clause (*b*) omit "of the Government of India or of any Local Government", "by the Government of India or the Local Government" and "and extradition".

Clause (45) shall stand unmodified.

At the end of clause (47) insert "or a Regulation made under section 92 of the Government of India Act, 1935".

Section 5.—In sub-section (1) for the words from "on the day" to "Governor-General" substitute "if it is an Act of the Legislature, on the day on which the assent thereto of the Governor, the Governor-General or His Majesty, as the case may require, is first published in the Official Gazette, and if it is an Act of the Governor, on the day on which it is first published as an Act in the Official Gazette".

Section 23.—For "the day on which the assent thereto of the Governor-General is first published in the Gazette" and "the assent of the Governor-General has been published as aforesaid" substitute "the passing thereof".

Section 24.—For "Local Government" substitute "Central Government, or, as the case may be, the Provincial Government".

After section 31 insert—

"Application to Ordinances.

32.—The provisions of this Act shall apply in relation to any Ordinance promulgated by the Governor under section 88 or section 89 of the Government of India Act, 1935, as they apply in relation to a North-West Frontier Province Act made by the Provincial Legislature".

The North-West Frontier Province Public Tranquillity (Additional Powers) Act, 1932.

(N. W. F. P. III of 1932.)

Section 4.—For "the Government" substitute "the Crown".

Section 4.—For "of Government" substitute "of the Provincial Government".

Section 7.—For "of Government" substitute "of the Crown".

Section 11.—For "of the Government" and "of Government" substitute "of the Crown".

Section 20.—For "Section 101 of the Government of India Act" substitute "section 220 of the Government of India Act, 1935".

The North-West Frontier Province Regulation of Accounts Act, 1935.

(N. W. F. P. V of 1935.)

Section 2.—In clause (1) for "Indian Legislature" substitute "Central Legislature".

In clause (7) for "Government" substitute "the Central or any Provincial Government".

The North-West Frontier Province Village Council Act, 1935.

(N. W. F. P VII of 1935.)

Section 14.—For "department of Government" substitute department of any Government".

Section 23.—For "Secretary of State" substitute "Crown".

Section 32.—For "Government" substitute "any Government".

The North-West Frontier Province Legislative Council (Elected President's Salary) Act, 1936.

(N.W.F.P. II of 1937.)

This Act shall cease to have effect.

The Hazara Forest Act, 1936.

(N. W. F. P. VI of 1937.)

Section 4.—For "the property of Government" substitute "vested in the Crown for the purposes of the Province" and for "to Government" substitute "to the Provincial Government".

Sections 5 and 6.—For "Government" substitute "the Crown".

Section 11.—Omit "with the previous sanction of the Governor-General in Council".

Section 12.—For "Government" substitute in sub-section (1) "Provincial Government" and in sub-section (3) "Crown".

Section 27.—For "the Government" substitute "the Provincial Government" and omit "With the previous sanction of the Governor-General in Council".

Section 28.—For "Local Government" substitute "Central Government" and at the end of section add—

"(2) Notwithstanding anything in this Section the Provincial Government may, until provision to the contrary is made by the Central Legislature, continue to levy any duty which it was lawfully levying before the commencement of Part III of the Government of India Act, 1935, under this section as then in force:

Provided that nothing in this sub-section shall authorise the levy of any duty which as between timber produced in the Province and similar timber not so produced discriminates in favour of the former or which in the case of timber produced outside the Province, discriminates between timber produced in one locality and similar timber produced in another locality".

After section 29 insert—

"29A.—Notwithstanding anything in section 29, the Central Government may make rules to prescribe the route by which alone timber or other forest produce may be imported or transported into the Hazara district across any customs frontier as defined by the Central Government, and any rules made under section 29 shall have effect subject to the rules made under this section".

Section 30.—For "the property of Government" substitute "vested in the Crown for the purposes of the Province".

Section 31.—For "the Government" substitute "the Crown".

Section 32.—For "the Government" substitute "the Crown for the purposes of the Province".

Section 33.—For "Government" substitute "Crown".

Section 34.—For "Government" substitute "the Provincial Government".

Sections 42 and 56.—For "Government" substitute "Crown".

SCHEDULE XI.

REGULATIONS OF THE GOVERNOR-GENERAL IN COUNCIL.

The Sonthal Parganas Settlement Regulation, 1872.

(Central Regulation III of 1872.)

Section 3.—At the end of sub-section (3) insert—

"Provided that the powers conferred by this sub-section shall not be exercisable after the commencement of Part III of the Government of India Act, 1935".

Section 18.—For the first "the Government" substitute "any Government" and for the second and the third "the Government" substitute "the Crown".

The Ajmer-Taluqdars' Relief Regulation, 1872.

(Central Regulation IV of 1872.)

Section 2.—For "Government" substitute "the Crown".

Section 3.—For "Government rupees" substitute "British Indian currency".

The Spiti Regulation, 1873.

(Central Regulation I of 1873.)

Section 14.—For "law hereafter passed by the Governor-General in Council" substitute "Central Act or regulation passed or made after the commencement of this regulation and before the commencement of Part III of the Government of India Act, 1935".

The Bengal Eastern Frontier Regulation, 1873.

(Central Regulation V of 1873.)

Section 2.—Omit "with the previous sanction of the Governor-General in Council".

The Punjab Frontier Crossing Regulation, 1873.

(Central Regulation VII of 1873.)

Throughout the Regulation, except in the preamble, for "Chief Commissioner of the North-West Frontier Province" and "Local Government" substitute "Central Government".

Section 4.—For "such place under the Government of the Lieutenant-Governor of the Punjab" substitute "such place within the Punjab or the North-West Frontier Province".

The Punjab Frontier Grazing Regulation, 1874.

(Central Regulation I of 1874.)

Section 6.—For "Government" substitute "the Crown".

The Punjab Frontier Jagir Revenue Collection Regulation, 1874.

(Central Regulation VII of 1874.)

Section 2.—Omit "said".

Section 4.—Omit "said" and "at his discretion".

The Andaman and Nicobar Islands Regulation, 1876.

(Central Regulation III of 1876.)

Section 13.—"Chief Commissioner" shall stand unmodified.

Section 14A.—In clause (3) "Chief Commissioner" shall stand unmodified.

The Assam Local Rates Regulation, 1879.

(Central Regulation III of 1879.)

Section 2.—For "Government" substitute "any Government".

Section 3A.—Omit from "The proceeds" to the end of the section.

Section 8.—For the words from "to the Chief Commissioner" to "behalf" substitute "to the tribunal to be appointed under section 296 of the Government of India Act, 1935", and for "by the Chief Commissioners or the person so appointed" substitute "by the tribunal".

Omit sections 11 to 16.

The Assam Frontier Tracts Regulation, 1880.

(Central Regulation II of 1880.)

This Regulation shall cease to have effect, without prejudice to the continuing validity of any notification or order made thereunder and in force immediately before the commencement of Part III of the Government of India Act, 1935.

The Garo Hills Regulation, 1882.

(Central Regulation I of 1882.)

Section 2.—Omit "subject to the control of the Governor-General in Council".

The Sylhet and Cachar Rural Police Regulation, 1883.

(Central Regulation I of 1883.)

This Regulation shall cease to have effect.

The Assam Frontier Tracts Regulation, 1884.

(Central Regulation III of 1884.)

This Regulation shall cease to have effect, without prejudice to the continuing validity of any notification or order made thereunder and in force immediately before the commencement of Part III of the Government of India Act, 1935.

The Assam Land and Revenue Regulation, 1886.

(Central Regulation I of 1886.)

Section 3.—For "the Government" substitute "the Crown" and for "by Government" substitute "by the Provincial Government".

Section 6.—For "British Government" substitute "Crown".

Sections 8 and 9.—For "Government" substitute "Crown".

Section 16.—For "British Government" substitute "Crown".

Section 23.—For "Government" substitute "Crown".

Section 28.—For "British Government" substitute "Crown".

Sections 34 and 58.—For "Government" substitute "Crown".

Section 62.—For "Government" substitute "the Crown".

Section 78A.—In sub-section (1) for "Government" substitute "Provincial Government".

Section 84.—For "Government" substitute "Provincial Government".

Section 144A.—For "the Government" and "Government" substitute "the Crown".

Section 147.—For "Chief Commissioner" substitute "tribunal to be appointed under section 296 of the Government of India Act, 1935".

Sections 148 and 149.—For "officer" substitute "tribunal or officer".

Section 151.—For "Chief Commissioner" substitute "tribunal to be appointed under section 296 of the Government of India Act, 1935".

The Ajmere Rural Boards Regulation, 1886.

(Central Regulation VI of 1886.)

Section 8.—For "by the Government" substitute "by the Central or any Provincial Government".

Section 15.—For "the rules of the Civil Service Regulations for the time being in force" substitute "the conditions of his service under the Crown".

Section 16.—For "the rules of the Civil Service Regulations for the time being in force" substitute "rules similar to those applicable for the time being to servants of the Crown of the like class".

Section 21.—For "Secretary of State for India in Council" substitute "Central Government".

The Assam Forest Regulation, 1891.

(Central Regulation VII of 1891.)

Section 1.—In sub-section (2) omit "for the time being" and "Chief Commissioner" shall stand unmodified.

Section 3.—In clause (1) omit "the Governor-General in Council or" and in clause (8) for "the British Government; and" substitute "the Crown, not being land vested in the Crown for the purposes of the Central Government; and".

Section 7.—For "Government" substitute "Crown".

Section 28.—Omit "subject to the control of the Governor-General in Council".

For section 37 substitute—

"37.—(1) The Central Government may levy a duty in such manner, at such places and at such rates as it may prescribe by notification in the Official Gazette, on all forest produce which is brought into the territories to which this Regulation extends from any place beyond those territories.

Power to impose duty on forest produce.

(2) In every case in which such duty is directed to be levied ad valorem, the Central Government may, by like notification, determine the manner in which the value is to be ascertained.

(3) Until provision to the contrary is made by the Central Legislature, the Provincial Government may continue to levy on forest produce brought into the territories to which this Regulation extends from any place in the province beyond those territories any duty which it was levying immediately before the commencement of Part III of the Government of India Act, 1935:

Provided that nothing in this sub-section authorises the levy of any duty which as between forest produce of the Province and similar produce of a locality outside the province, discriminates in favour of the former, or which, in the case of forest produce of localities outside the Province, discriminates between forest produce of one locality and similar forest produce of another locality."

Section 38.—For "Local Government" substitute "Central or, as the case may be, the Provincial, Government".

Section 40.—For "the Government" substitute "the Crown".

After section 40 insert—

"40A. Notwithstanding anything in section 40, the Central Government may make rules to prescribe the route by which alone timber or other forest produce may be imported, exported, or moved into or from British India across any customs frontier as defined by the Central Government, and any rules made under section 40 shall have effect subject to the rules made under this section".

Powers of Central Government as to movement of timber across Customs frontiers.

Section 43.—For "the Government" substitute "the Crown for the purposes of the Province".

Section 45.—For "Government" substitute "Crown".

Section 46.—For "in the Government" substitute "in the Crown for the purposes of the province".

Sections 49, 51 and 52.—For "the Government" substitute "the Crown".

Section 56.—For "in the Government" substitute "in the Crown for the purposes of the province".

Sections 57, 59 and 63.—For "the Government" substitute "the Crown".

Section 64.—For "the Government" substitute "the Provincial Government".

Section 65.—For "the Government" substitute "the Crown".

Section 72.—In clause (*c*) omit from "from the proceeds" to "treasury".

Sections 74 to 77.—For "Government" substitute "Crown".

The Coorg Land and Revenue Regulation, 1899.

(Central Regulation I of 1899.)

Section 4 shall stand unmodified.

Section 9.—Omit "the Commissioner with the previous sanction of".

Sections 13, 14 and 17 shall stand unmodified.

Section 142.—Omit clause (*b*).

The Chittagong Hill-Tracts Regulation, 1900.

(Central Regulation I of 1900.)

Section 2.—For "Local Government may" substitute "Provincial Government may, with the concurrence of the Central Government".

Section 4.—At the end of sub-section (2) insert—

"Provided further that no such declaration shall be made after the commencement of Part III of the Government of India Act, 1935."

Section 11.—For "Local Government" substitute "Central Government".

Section 18.—After sub-section (3) insert—

"(4) The powers conferred by this section on the Provincial Government shall be powers of the Central Government as respects rules for the regulation of the following matters, namely—

(*a*) the possession of fire-arms and ammunition and the manufacture of gunpowder;

(*b*) the cultivation, manufacture and sale for export of opium; and

(*c*) the import or export across customs frontiers, as defined by the Central Government, of any intoxicating drug or foreign spirit or fermented liquor."

The Hazara (Upper Tanawal) Regulation, 1900.

(Central Regulation II of 1900.)

Section 2.—For "the Government" substitute "the Provincial Government".

Section 4.—At the end of the section insert—

"Provided that the powers conferred by this section shall not be exercised after the commencement of Part III of the Government of India Act, 1935".

Section 6.—At the end of sub-section (3) insert—

"Provided that in relation to offences with respect to any of the matters specified in List I in the Seventh Schedule to the Government of India Act, 1935, the powers conferred by this sub-section on the Provincial Government shall be powers of the Central Government".

The Coorg Courts Regulation, 1901.

(Central Regulation I of 1901.)

Omit section 17.

The Frontier Crimes Regulation, 1901.

(Central Regulation III of 1901.)

Section 1.—Omit "with the previous sanction of the Governor-General in Council".

Sections 32 and 62A.—For "Local Government" substitute "Central Government".

The Frontier Murderous Outrages Regulation, 1901.

(Central Regulation IV of 1901.)

Section 1.—Omit "for the time being".

Section 11.—For "Governor-General in Council" substitute "Provincial Government".

Section 12.—After "any person" insert "charged with, or suspected of, an intention to commit, or permit the commission of, an offence punishable under section 2, being a person" and after "section 11" insert "or under any such law as is mentioned in that section".

The North-West Frontier Province Law and Justice Regulation, 1901.

(Central Regulation VII of 1901.)

Section 2.—Omit clause (*c*) of sub-section (1) and in sub-section (2) for "Governor-General in Council" substitute "Provincial Government".

Section 6.—In sub-section (1), in clause (*b*), for "Lieutenant-Governor" substitute "Governor" and for "to the Chief Commissioner" substitute "respectively to the Provincial Government or to the Governor"; and omit clause (*g*).

Section 8.—Omit "with the previous sanction of the Governor-General in Council".

After section 8 insert—

"Application to adaptations and modifications made under s. 293 of the Government of India Act, 1935

8A.—References in the foregoing provisions of this Part of this Regulation, in whatever form of words, to any Indian law in force shall, after the commencement of Part III of the Government of India Act, 1935, be construed as references to that law as adopted and modified under that Act."

Section 16.—Omit "with the previous sanction of the Governor-General in Council"

Section 17.—At the end insert—

"(7) Nothing in this section shall authorise the imposition of any tax which the Provincial Legislature has no power to impose in the Province under the Government of India Act, 1935:

Provided that any such tax which immediately before the commencement of Part III of the said Act was lawfully being levied under this section as then in force, may continue to be levied until provision to the contrary is made by the Central Legislature."

Section 26.—Omit "subject to the control of the Governor-General in Council".

Section 30.—At end insert—

"(4) In this and the next three succeeding sections 'the Government' means, in relation to any period before the commencement of Part III of the Government of India Act, 1935, the Central Government or the Provincial Government, and in relation to any subsequent period, the Provincial Government."

First Schedule.—For the entry in column 4 against the Punjab Frontier Crossing Regulation, 1873, substitute—

"All references to the Commissioner, or the Commissioner of the Division, shall be omitted."

The North-West Frontier Province Court of Wards Regulation, 1904.

(Central Regulation V of 1904.)

Section 2.—Omit "the territories for the time being administered by the Chief Commissioner of"; "and to the Local Government"; "and to the said Chief Commissioner respectively" and proviso (*c*).

At the end of the section insert—

"The reference in this section to the Punjab Court of Wards Act, 1903, shall, after the commencement of Part III of the Government of India Act, 1935, be construed as a reference to that Act as adapted and modified under the said Act of 1935."

The Coorg Municipal Regulation, 1907.

(Central Regulation II of 1907.)

Section 7.—Omit "for the benefit of the inhabitants of the local area" and for "Secretary of State for India in Council" substitute "Central Government".

Section 28.—For "Civil Service Regulations for the time being in force" substitute "conditions of his service under the Crown" and for "by the Government" substitute "by the Government concerned".

Section 29.—For the first "under the Civil Service Regulations for the time being in force" substitute "under rules similar to those applicable for the time being to servants of the Crown of the like class" and omit the second "under the Civil Service Regulations for the time being in force".

Section 34.—For "Secretary of State for India in Council" substitute "Central Government".

The Nugur Alhaka and Cherla Laws and Cesses Regulation, 1909.

(Central Regulation I of 1909.)

Throughout the Regulation, for "Governor of Fort St. George in Council" substitute "Provincial Government of Madras".

Section 3.—Omit from "notwithstanding" to "Governor-General in Council".

The British Baluchistan Bazars Regulation, 1910.

(Central Regulation V of 1910.)

Section 5.—In the proviso to sub-section (1) omit—"under any general or special orders of the Governor-General in Council for the time being in force".

The North-West Frontier Province Gazette Regulation, 1911.

(Central Regulation I of 1911.)

This regulation shall cease to have effect.

The Laccadive Islands and Minicoy Regulation, 1912.

(Central Regulation I of 1912.)

Section 3.—After "this Regulation" insert "the Bengal State Prisoners Regulation, 1818".

Omit section 8A.

Section 9.—In clause (*c*) of sub-section (1) after "may" insert "before the commencement of Part III of the Government of India Act, 1935".

The British Baluchistan Laws Regulation, 1913.

(Central Regulation II of 1913.)

Section 5.—Omit sub-section (2).

The Excise Regulation, 1915.

(Central Regulation I of 1915.)

Section 2.—Omit the provisos to clauses (8) and (10).

In clause (19) for "import and export from British Baluchistan from and to the territories administered by the Agent to the Governor-General in Baluchistan as such Agent" substitute "import

and export across the frontiers between British Baluchistan and any territories outside British India in or in relation to which the Chief Commissioner of British Baluchitsan exercises any jurisdiction under the authority of the Central Government or of the Crown Representative "

Section 69.—For "Secretary of State for India in Council" substitute "Crown"

The North-West Frontier Province Law and Justice (Amendment) Regulation, 1919.

(Central Regulation I of 1919.)

Omit section 5.

The North-West Frontier Province Validation and Indemnity Regulation, 1920

(Central Regulation I of 1920.)

Throughout the Regulation for "officer of Government" substitute "servant of the Crown".

The Ajmer-Merwara Municipalities Regulation, 1925.

(Central Regulation VI of 1925.)

Section 6.—For "Secretary of State in Council" substitute "Central Government".

Section 24.—In sub-section (1) for "any rule, or general or special order, made by the Secretary of State in Council or the Governor-General in Council in force for the time being" substitute "the conditions of his service under the Crown".

In sub-section (5) for "any rule, or general or special order, made by the Secretary of State in Council or the Governor-General in Council" substitute "any relevant rules or orders".

Section 25.—For "the Secretary of State in Council or the Governor-General in Council" substitute "the Government concerned".

Section 28.—For "Secretary of State for India in Council' substitute "Central Government".

The Ajmere Courts Regulation, 1926.

(Central Regulation IX of 1926.)

Omit section 17.

Section 18.—For the first "Judicial Commissioner" substitute "Provincial Government".

The Panth Piploda Laws Regulation, 1929.

(Central Regulation I of 1929.)

Section 3.—Omit sub-section (2).

The Schedule.—Omit the modifications of sections 5 and 17 of the Public Gambling Act, 1867.

The Validation (Matrimonial Jurisdiction) Regulation, 1929

(Central Regulation II of 1929.)

This Regulation shall stand unmodified.

The North-West Frontier Province Courts Regulation, 1931.

(Central Regulation I of 1931.)

Throughout the Regulation, for "Additional Judicial Commissioner" and "Additional Judicial Commissioners" substitute "Assistant Judicial Commissioner" and "Assistant Judicial Commissioners" respectively.

Omit section 4.

Section 7.—Omit "with the previous sanction of the Governor-General in Council".

Section 9.—For "The Local Government may appoint a Registrar and the Judicial Commissioner may appoint" substitute "There may, in accordance with the provisions of Part X of the Government of India Act, 1935, be appointed a Registrar, and".

Omit sub-section (3).

Section 16.—Omit all the words after "the number of sub ordinate judges to be appointed".

Section 20.—In sub-section (2) for "Local Government" substitute "Court of the Judicial Commissioner".

Omit sections 27 and 28.

Section 29.—For "26 and 27" substitute "and 26".

Section 36.—For "of Government" substitute "of the Crown".

The Panth Piploda Courts Regulation, 1931.

(Central Regulation IV of 1931.)

Throughout the Regulation, except in section 5, "Chief Commissioner" shall stand unmodified.

The Orissa Laws Regulation, 1936.

(Central Regulation I of 1936.)

Section 8.—For "a Legislative Council" substitute "the Chamber or Chambers of a Provincial Legislature"; for "such Legislative Council" substitute "such Chamber or Chambers", and for "any Legislative Council" substitute "a Chamber or the Chambers of a Provincial Legislature".

Section 13.—For "Governor-General in Council" substitute "Provincial Government".

After section 14 insert—

"15. References in this Regulation, by whatever form of words, to any Indian law in force immediately before the first day of April 1936, shall, after the commencement of Part III of the Government of India Act, 1935, be construed as references to that law as adapted or modified under section 293 of that Act."

Provisions as to modifications made under s. 293 of the Government of India Act, 1935.

The First Schedule.—In the first column for "Local Government" substitute "Local or Provincial Government"; omit "except in the Patna University Act, 1917 and the Andhra University Act, 1925"; but save as aforesaid the said first column shall stand unmodified.

In the second column, for entry 1 substitute:—

"1. (*a*) The Provincial Government of Orissa.

(*b*) The Governor of Orissa."

The Orissa Medical Regulation, 1936.

(Central Regulation II of 1936.)

After section 25 insert—

"26. This Regulation has effect subject to the provisions of Chapter III of Part V of the Government of India Act, 1935."

Saving for provisions of Government of India Act, 1935.

The Schedule.—In clause 3, after "India" insert "or Burma"; for "by the Government" substitute "by the Government concerned", and for "maintained by Government" substitute "maintained by any Government".

The Khondmals Laws Regulation, 1936.

(Central Regulation IV of 1936.)

Sections 4 and 5.—At the end of each section insert—

"The powers conferred by this section shall not be exercisable after the commencement of Part III of the Government of India Act, 1935."

Sections 33, 36 and 39.—For "the Government" substitute "the Crown".

Section 45.—At the beginning insert—

"The Provincial Government may appoint any person to be a village-chaukidar and"; omit "may after consulting the house-holders of any village, appoint any person to be a village-chaukidar, and"

Section 68.—For "the Government" substitute "the Crown".

Section 69.—For "the Government" substitute "the Provincial Government".

The Angul Laws Regulation, 1936.

(Central Regulation V of 1936.)

Sections 4 and 5.—At the end of each section insert—

"The powers conferred by this section shall not be exercisable after the commencement of Part III of the Government of India Act, 1935".

Sections 33, 36 and 39.—For "the Government" substitute "the Crown".

Section 46.—At the beginning insert—

"The Provincial Government may appoint any person to be a village-chaukidar and"; and omit "may after consulting the house-holders of any village, appoint any person to be a village-chaukidar and".

Section 69.—For "the Government" substitute "the Crown".

Section 70.—For "the Government" substitute "the Provincial Government".

The Sind Laws Regulation, 1936.

(Central Regulation VI of 1936.)

Section 4.—"Governor in Council" and "Bombay Government Gazette" shall stand unmodified.

Omit section 5.

After section 5 insert—

"6. References in this Regulation, by whatever form of words, to any Indian law in force in Sind immediately before the first day of April nineteen hundred and thirty-six shall, after the commencement of Part III of the Government of India Act, 1935, be construed as references to that law as adapted or modified under section 293 of that Act."

Provisions as to modifications made under s. 203 of Government of India Act, 1935.

The First Schedule.—In the first column in entry 1, at the end of clause (*a*) insert "the Commissioner in Sind, the Provincial Government, or the Provincial Government of Bombay", in clause (*b*) omit from "except" to the end, and omit clause (*c*); but in other respects the first column shall stand unmodified

In the second column for entry 1, substitute—

"1. (*a*) The Provincial Government of Sind.

(*b*) The Governor of Sind."

The Third Schedule.—Omit paragraph 11.

SCHEDULE XII

MADRAS REGULATIONS.

The Indian Civil Service (Madras) Loans Prohibition Regulation, 1802.

(Madras Regulation XIX of 1802.)

Long Title and Section 2.—For "the Company" substitute "the Crown".

The Madras Permanent Settlement Regulation, 1802.

(Madras Regulation XXV of 1802.)

Throughout the Regulation for "officers of Government" substitute "officers of the Crown".

Section 5.—For the second "Government" substitute "Provincial Government".

Sections 12 and 13.—For "the Government" substitute "the Provincial Government".

The Madras Karnams Regulation, 1802.

(Madras Regulation XXIX of 1802.)

Omit section 5.

Section 13.—For "Government" substitute "the Crown".

The Madras Board of Revenue Regulation, 1803.

(Madras Regulation I of 1803.)

Omit section 40.

The Madras Collectors Regulation, 1803.

(Madras Regulation II of 1803.)

Section 2.—Omit "from duties on commodities by sea and land, from salt" and for "of the Company" substitute "of the Crown".

Omit section 37.

Section 60.—Omit the words to "or otherwise".

Omit sections 61 and 64.

Section 65.—For "Governor in Council" substitute "Central Government".

The Madras Endowments and Escheats Regulation, 1817.

(Madras Regulation VII of 1817.)

Sections 4 and 6.—For "Government" substitute "the Provincial Government".

Sections 14 and 16.—For "Government" substitute "the Crown".

The Madras State Prisoners Regulation, 1819.

(Madras Regulation II of 1819.)

Section 1.—In the recitals, for "reasons of State policy" substitute "reasons connected with the maintenance of public order in the Province", for "the reasons above declared" substitute "reasons of State", and omit "situated within the territories dependent on the Presidency of Fort St. George".

At the end of the section, for the words from "the Governor in Council has enacted" to the end of the section, substitute "it is hereby enacted as follows:—"

Section 2.—In the first paragraph, for "the reasons stated in the preamble of this Regulation" substitute "reasons connected with the maintenance of public order in the Province,", and for the words from "under the authority" to "shall be issued" substitute "shall be issued by the Provincial Government".

In the third paragraph for "territories subject to the Presidency of Fort Saint George" substitute "Province".

Section 3.—Omit "through the Chief Secretary to Government".

Section 9.—For "the reasons declared in the preamble to this Regulation" substitute "reasons of State" and omit "under the hand of one of the Secretaries to Government".

After section 11, insert—

"12. This Regulation extends to the whole of the Province of Madras." Extent.

Appendix.—Omit "in Council" and all words after "Regulation II of 1819".

The Madras Native Public Officers Regulation, 1822.

(Madras Regulation VII of 1822.)

This Regulation shall cease to have effect.

SCHEDULE XIII.

BOMBAY REGULATIONS.

(Bombay Regulation II of 1827.)

Section 47.—For "Government" substitute "the Crown or the Federal Railway Authority".

(Bombay Regulation IV of 1827.)

Section 26.—For "Regulations of Government" substitute "Indian laws".

(Bombay Regulation VIII of 1827.)

Section 10.—For "Government newspaper" substitute "Official Gazette".

(Bombay Regulation XXII of 1827.)

Section 42.—For "Governor in Council" substitute "Central Government".

Section 43.—For "Government" and for the last "the Collector" substitute "the Central Government".

(Bombay Regulation XXV of 1827.)

The Preamble.—In the first recital, for the words from "reasons of State" to "internal commotion" there shall be substituted the words "reasons connected with the maintenance of public order in a Province".

In the third recital, for the words "the reasons above declared" there shall be substituted the words "reasons of State", and the words "situated within the zilas subordinate to Bombay" shall be omitted.

Section 1.—In the first paragraph, for "any of the considerations stated in the preamble of this Regulation" substitute "reasons connected with the maintenance of public order in the Province"; and in the second paragraph, for "the zilas subordinate to Bombay" substitute "the Province".

Section 3.—Omit "through the Secretary to Government in the Political Department".

Section 7.—For "reasons of the nature of those specified in the preamble to this Regulation" substitute "reasons of State"; and omit "under the hand of one of the Secretaries to Government".

After Chapter II, insert the following Chapter:—

"CHAPTER III.

EXTENT OF THIS REGULATION.

10. This Regulation extends to the whole of the Provinces of Bombay and Sind as constituted under the Government of India Act, 1935." Extent.

Appendix A.—Omit "in Council" and all words after "Regulation XXV, A.D. 1827."

(Bombay Regulation XXIX of 1827.)

Sections 3 and 4.—For "Government" substitute "the Provincial Government".

Section 5.—For "to Government" and "by Government" substitute "to the Provincial Government" and "by the Provincial Government".

(Bombay Regulation VII of 1830.)

Section 5.—For "Government" substitute "the Provincial Government".

(Bombay Regulation XIII of 1830.)

Section 1.—For "Government" and "the Government" substitute "the Provincial Government".

Section 3.—For "Government" substitute "the Provincial Government".

Appendix A.—For "the Governor in Council" substitute "the Governor".

(Bombay Regulation I of 1831.)

Throughout the Regulation for "Government" substitute "the Provincial Government".

(Bombay Regulation XVI of 1831.)

Throughout the Regulation for "Government" substitute "the Provincial Government".

SCHEDULE XIV.

BENGAL REGULATIONS.

The Bengal Permanent Settlement Regulation, 1793.

(Bengal Regulation I of 1793.)

The Regulation shall stand unmodified but, as respects anything done or to be done after the commencement of Part III of the Government of India Act, 1935, references to the Governor-General in Council shall be construed as references to the Provincial Government, except that, as respects that period, references to the making or adoption of Regulations by the Governor-General in Council shall be construed as references to the passing of Acts of the Provincial Legislature.

The Bengal Land Revenue Regulation, 1793.

(Bengal Regulation II of 1793.)

Omit the second paragraph of section 9, and sections 11 and 13.

Section 15.—For "Governor-General in Council" substitute "Provincial Government".

Omit section 18.

The Bengal Inheritance Regulation, 1793.

(Bengal Regulation XI of 1793.)

Section 5.—For "Regulations that have been or may be passed by the Governor-General in Council" substitute "laws for the time being in force" and omit "and Regulations".

The Bengal Revenue-Free Lands (Non-Badshahi Grants) Regulation, 1793.

(Bengal Regulation XIX of 1793.)

Section 10.—For "of the Governor-General in Council or the Local Government" substitute "of the Provincial Government or, before the commencement of Part III of the Government of India Act, 1935, of the Central Government".

Section 20.—For "the British Government" substitute "the Crown".

Sections 26 and 27.—For "Governor-General in Council" substitute "Provincial Government".

The Bengal Revenue-Free Lands (Badshahi Grants) Regulation, 1793.

(Bengal Regulation XXXVII of 1793.)

Sections 5 and 6.—For "to Government" substitute "to the Crown".

Section 15.—For "the British Government" substitute "the Crown".

Sections 21 and 22.—For "Governor-General in Council" substitute "Provincial Government".

The Indian Civil Service (Bengal) Loans Prohibition Regulation, 1793.

(Bengal Regulation XXXVIII of 1793.)

Long Title and section 2.—For "Company" substitute "Crown".

The Bengal Native Revenue Officers Regulation, 1794.

(Bengal Regulation III of 1794.)

Throughout the Regulation for "Government" substitute "the Provincial Government".

The Benares Permanent Settlement Regulation, 1795.

(Bengal Regulation I of 1795.)

Section 3.—In the third clause for "the Governor-General in Council" substitute "any competent authority in British India".

The Benares Permanent Settlement (Supplemental) Regulation, 1795.

(Bengal Regulation XXVII of 1795.)

Section 2.—For "and the Governor-General in Council" substitute "and the Provincial Government".

Section 3.—For "Government" substitute "the Crown".

Section 5.—In the first clause for the words from "the Governor-General in Council" to "the soil" substitute "such laws as may be necessary for the protection and welfare of the pattidars, under-renters, raiyats and other cultivators of the soil will be enacted whenever deemed proper".

In the second clause for the words from "if he shall" to "to collect" substitute "if the saiyar collections or any other internal duties are hereafter re-established and officers appointed on behalf of the Crown to collect them".

In the third clause for "Governor-General in Council" substitute "Provincial Government" and for "Government" substitute "the Crown".

In the fourth clause omit "the Governor-General in Council reserves to himself" and for "should he" substitute "is reserved to the Crown, should the Provincial Government"; and for "Government" substitute "the Crown".

In the fifth clause for "of the Governor-General in Council dispensing with, altering or abolishing those Regulations" substitute "of those Regulations being dispensed with, altered or abolished".

Section 6.—For "Regulations that they may hereafter enact" substitute "laws which may hereafter be enacted".

Section 7.—In the first paragraph for "between Government and the proprietor" substitute "with the proprietor".

In the third paragraph for "Government might sustain a considerable loss of revenue" substitute "considerable loss of public revenue might be sustained" and for "such other officer as Government" substitute "such other officer as the Provincial Government".

In the fourth paragraph for "Government" substitute "the Crown".

In the first paragraph of clause first omit "by order of the Governor-General in Council".

In the second paragraph of clause first for "Regulations as the Governor-General in Council may hereafter adopt" substitute "laws as may be made hereafter".

In the first paragraph of clause second omit "by order of the Governor-General in Council" and in the third paragraph of that clause for "Regulations as the Governor-General in Council may hereafter enact" substitute "laws as may be made hereafter".

In the second paragraph of clause third for "Regulations as Government may hereafter adopt" substitute "laws as may be made hereafter".

In the second paragraph of clause fourth for "Regulations as the Governor-General in Council may hereafter adopt" substitute "laws as may be made hereafter".

Section 10.—For "Government" substitute "the Crown".

The Benares Inheritance Regulation, 1795.

(Bengal Regulation XLIV of 1795.)

Section 6.—For "Regulations that have been or may be passed by the Governor-General in Council" substitute "law for the time being in force".

The United Provinces Native Revenue Officers' Regulation, 1803.

(Bengal Regulation XXXIII of 1803.)

Sections 2, 3 and 8.—For "Government" substitute "the Crown".

The Cuttack Land-Revenue Regulation, 1805.

(Bengal Regulation XII of 1805.)

Sections 22, 30 and 35.—For "to Government" substitute "to the Crown".

The Bengal Troops, Transport and Travellers Assistance Regulation, 1806.

(Bengal Regulation XI of 1806.)

Section 4.—For "Local Government" substitute "Central Government".

Sections 5 and 7.—For "Government" substitute "the Central Government".

Section 8.—For "officers of Government" substitute "officers of the Crown".

The Bengal Charitable Endowments' Public Buildings and Escheats Regulation, 1810.

(Bengal Regulation XIX of 1810.)

Section 3.—For "of Government" substitute "of the Provincial Government".

Sections 6 and 13.—For "to Government" substitute "to the Provincial Government".

The Bengal Land-Revenue Sales Regulation, 1812.

(Bengal Regulation V of 1812.)

Section 4.—For "Government" substitute "the Provincial Government".

Section 24.—For "Government" substitute "Provincial Government".

Section 25.—For "to Government" substitute "to the Crown"

The Bengal Foreign Immigration Regulation, 1812.

(Bengal Regulation XI of 1812.)

Throughout the Regulation for "Local Government" substitute "Central Government" and for "the British Government" substitute "His Majesty".

The Bengal Kanungos Regulation, 1816.

(Bengal Regulation V of 1816.)

Omit section 3.

Section 4.—After "Collectors" insert "or other persons responsible for making the appointments".

Section 5.—For "by Government" substitute "by the Crown".

Section 7.—For "Government" substitute "the Crown".

Section 12.—For "Government" substitute "the Provincial Government".

The Bengal Patwaris Regulation, 1817.

(Bengal Regulation XII of 1817.)

Sections 7, 12 and 14.—For "Government" substitute "the Crown".

Section 36.—For "Government" substitute "the Provincial Government".

The Bengal Police Regulation, 1817.

(Bengal Regulation XX of 1817.)

Section 30.—For "Hon'ble Company's military service" substitute "military service of the Crown" and for "Company's sepoys or lascars" substitute "sepoys or lascars in the service of the Crown".

The Bengal State Prisoners Regulation, 1818.

(Bengal Regulation III of 1818.)

Section 1.—In the second and third recitals, for "Governor-General in Council" substitute the word "Government".

In the fifth recital omit "situated within the territories dependent on the Presidency of Fort William".

At the end of the section, for "the Vice-President in Council has enacted the following rules, which are to take effect, throughout the Provinces immediately subject to the Presidency of Fort William, from the day on which they may be promulgated" substitute "it is hereby enacted as follows:—".

Section 2.—In the first paragraph for "may seem to the Governor-General in Council" substitute "may seem to the Government"; and for "a warrant of commitment under the authority of the Governor-General in Council, and under the hand of the Chief Secretary, or of one of the Secretaries to Government, shall be issued" substitute "a warrant of commitment shall be issued by the Government".

For the second paragraph substitute—

"Second.—The warrant of commitment shall be in that one of the forms set out in the Appendix to this Regulation which is appropriate to the case."

For the third paragraph substitute—

"Third.—The warrant of commitment shall, in relation to a person to be confined for reasons connected with defence, external affairs or the discharge of the functions of the Crown in its relations with Indian States, be sufficient authority for his detention in any fortress, jail or other place in any Governor's Province or Chief Commissioner's Province, and in relation to any person to be confined for reasons connected with the maintenance of public order in a Province shall be sufficient authority for his detention in any fortress, jail or other place in that Province."

Section 3.—For "Governor-General in Council" substitute "Government" and omit "through the Secretary to Government in the Political Department".

Sections 4, 5 and 6.—For "Governor-General in Council" substitute "Government".

After section 7 insert—

"Division of functions between Central Government and Provincial Government.

7A.—(1) Where a person is, or is to be, confined in a Governor's Province under this Regulation for reasons connected with defence, external affairs or the discharge of the functions of the Crown in its relations with Indian States, the warrant of commitment, and any orders as to his release or the place of his detention shall be issued by the Central Government, and the amount of the allowance to be fixed for his support shall be fixed by the Central Government and shall be paid by the Central Government to, and applied by, the Provincial Government; and all reports and representations to be made under the foregoing provisions of this Regulation shall be submitted and forwarded both to the Central Government and the Provincial Government.

(2) Subject as aforesaid, all things to be done by or to the Government in relation to any persons confined or to be confined under this Regulation shall be done by or to the Provincial Government.

(3) References in the preceding sections of this Regulation to the Government shall be construed in accordance with the foregoing provisions of this section.

(4) No Government shall, in relation to any person confined or to be confined for reasons of State connected with the discharge of the functions of the Crown in its relations with Indian States, act otherwise than with the concurrence of the Crown Representative."

Section 9.—For "Governor-General in Council" substitute "Provincial Government"; and omit "under the hand of one of the Secretaries to Government".

Section 11.—For "Governor-General in Council" substitute "Provincial Government".

After section 11, insert—

Extent.

12. This Regulation, so far as it relates to the confinement of persons for reasons connected with defence, external affairs and the discharge of the functions of the Crown in its relation with Indian States, extends to the whole of all the Governors' Provinces and Chief Commissioners' Provinces; and so far as relates to other matters, extends to all those Provinces except Madras, Bombay and Sind."

At the end of the Regulation insert—

"APPENDIX.

FORMS OF COMMITMENT.

Form of commitment for reasons connected with defence, external affairs, or the discharge of the functions of the Crown in its relations with Indian States.

To the (*here insert the officer's designation*).

Whereas the [Governor-General in Council] [Governor-General] (*omit the inappropriate words*) for good and sufficient reasons, being reasons connected with [defence, external affairs and the discharge of the functions of the Crown in its relations with Indian States] (*omit any inappropriate words*), has seen fit to determine that (*here insert the State prisoner's name*) shall be placed under personal restraint at (*here insert the name of the place*) you are hereby required and commanded in pursuance of that determination to receive the person abovenamed into your custody and to deal with him in accordance with the orders of the Government and the provisions of the Bengal State Prisoners Regulation, 1818.

Form of Commitment in Other Cases.

To the (*here insert officer's designation*).

Whereas the [Governor] [Governor-General in Council] [Governor-General] (*omit the inappropriate words*) for good and sufficient reasons, being reasons connected with the maintenance of public order, has seen fit to determine that (*here insert the State prisoner's name*) shall be placed under personal restraint at (*here insert the name of the place*) you are hereby required and commanded, in pursuance of that determination, to receive the person abovenamed into your custody, and to deal with him in conformity with the orders of the Government and the provisions of the Bengal State Prisoners Regulation, 1818."

The Bengal Land-Revenue Assessment (Resumed Lands) Regulation, 1819.

(Bengal Regulation II of 1819.)

Sections 3, 4 and 5.—For "Government" substitute "the Crown".

Section 13.—For "of Government" substitute "of the Crown" and for "by Government" substitute "by the Provincial Government".

Section 14.—For "Government" substitute "the Provincial Government".

Section 31.—For "Government" substitute "the Crown".

The Bengal Patni Taluks Regulation, 1819.

(Bengal Regulation VIII of 1819.)

Section 2.—For "Government" substitute "the Crown".

Section 8.—For "Government" substitute "Crown".

Section 14A.—For "Government" substitute "the Provincial Government".

Section 17.—For "Government" substitute "the Provincial Government".

The Bengal Land-Revenue Settlement Regulation, 1822

(Bengal Regulation VII of 1822.)

Section 3.—For "to Government" substitute "to the Provincial Government".

Section 5.—For "Government" (except in the phrases "Local Government" and "Government officer") substitute "the Provincial Government".

Section 7.—For "of Government" substitute "of the Provincial Government".

Section 9.—For "sanctioned by Government" substitute "sanctioned by the Provincial Government".

Section 10.—In clause second for the first "the Government" substitute "the Crown" and for "Officer of Government" substitute "Officer of the Crown"; in clause seventh for "Government" substitute "the Provincial Government", and in clause eighth for "of Government" substitute "of the Provincial Government".

Section 12.—For "Government" (except in the phrase "Government demand") substitute "the Provincial Government".

Section 14.—For "by Government" substitute "by the Provincial Government".

Section 15.—For "officers of the Government" substitute "officers of the Crown".

Section 17.—For "officers of Government" substitute "officers of the Crown" and for "sanction of Government" substitute "sanction of the Provincial Government".

Section 18.—For "of Government" substitute "of the Provincial Government".

Section 32.—For "to Government" substitute "to the Provincial Government".

Section 35.—For "Governor-General in Council" substitute "Provincial Government".

The Bengal Indemnity Regulation, 1822.

(Bengal Regulation XI of 1822.)

Section 38.—For "Government" substitute "the Crown".

The Indian Civil Service (Bengal) Loans Prohibition Regulation, 1823.

(Bengal Regulation VII of 1823.)

Section 4.—For "Government" substitute "the Crown".

The Bengal Land Revenue Settlement Regulation, 1825.

(Bengal Regulation IX of 1825.)

Section 5.—In the eighth clause for "of Government" substitute "of the Provincial Government"; in the tenth clause for "of Government" substitute "of the Crown"; in the eleventh clause for "Government" substitute "the Crown"; in the twelfth clause for the first "Government" substitute "the Crown" and for the second "Government" substitute "the Provincial Government".

The Bengal Alluvion and Diluvion Regulation, 1825.

(Bengal Regulation XI of 1825.)

Sections 4 and 5.—For "Government" substitute "the Crown".

The Bengal Land Revenue Settlement (Resumed Kanungos and Revenue Free Lands) Regulation, 1825.

(Bengal Regulation XIII of 1825.)

Section 3.—For "to Government" substitute "to the Crown".

Section 5.—For "by Government" substitute "by the Provincial Government".

The Bengal Revenue Free Lands Regulation, 1825.

(Bengal Regulation XIV of 1825.)

Section 2.—For "of Government" substitute "of the Crown".

Section 3.—In the ninth clause for "by Government" substitute "by the Provincial Government".

The Bengal Land Revenue Assessment (Resumed Lands) Regulation, 1828.

(Bengal Regulation III of 1828.)

Section 11.—For "Government" substitute "the Provincial Government".

Section 13.—For "from Government" substitute "from the Provincial Government".

The Bengal Land Revenue Settlement Regulation, 1828.

(Bengal Regulation IV of 1828.)

Section 2.—For "by Government" substitute "by the Provincial Government".

The Benares Family Domains Regulation, 1828.

(Bengal Regulation VII of 1828.)

Section 3.—For "Lieutenant Governor of the North Western Provinces" substitute "Provincial Government of the United Provinces".

The Bengal Revenue Commissioners Regulation, 1829.

(Bengal Regulation I of 1829.)

Section 2.—After "Provided however that" insert "subject to the provisions of section 246 of the Government of India Act, 1935," and for "Governor-General in Council, by an order in Council" substitute "Provincial Government by an order"

Section 4.—For "Governor-General in Council" substitute "Provincial Government" and for "by an order in Council" substitute "by order".

The Police-Powers of Tahsildars Regulation, 1831.

(Bengal Regulation XI of 1831.)

Throughout the Regulation for "Governor-General in Council" substitute "Provincial Government" and for "an order in Council" substitute "order".

The Bengal Land Revenue (Settlement and Deputy Collectors) Regulation, 1833.

(Bengal Regulation IX of 1833.)

Section 3.—For "Governor-General in Council" substitute "Provincial Government".

Section 24.—For "Government" substitute "Provincial Government".

THE GOVERNMENT OF BURMA (MISCELLANEOUS FINANCIAL PROVISIONS) ORDER, 1937.

AT THE COURT AT BUCKINGHAM PALACE,

The 18th day of March, 1937.

PRESENT:

THE KING'S MOST EXCELLENT MAJESTY IN COUNCIL.

WHEREAS by section one hundred and thirty-four of the Government of Burma Act, 1935 (hereafter in this Order referred to as "the Act"), His Majesty in Council is empowered, if he thinks it just so to do, to make provision for the payment to the revenues of the Federation or of the Governor General of India in Council out of the revenues of Burma, and for the charging on the revenues of Burma, of such periodical or other sums as may appear to him to be proper:

AND WHEREAS by section sixty-eight of the Act, His Majesty in Council is empowered to require certain contributions and payments to be made to, and out of, the Federal Fund of the Federated Shan States and to make such other provision (including provision with respect to borrowing) as he thinks fit with respect to the manner in which the said Fund is to be dealt with, but it will be impracticable for a considerable period after the commencement of the Act to determine what these contributions and payments should be:

AND WHEREAS it is provided by section seventy-seven of the Act that there shall be deemed to be owing by the Government of Burma to the Burma Railway Board such sum as may be declared by His Majesty in Council to represent the amount of certain existing railway funds attributable to the railways in Burma, but it is impracticable to ascertain the said amount with accuracy until after the commencement of the Act:

AND WHEREAS by section one hundred and fifty-six of the Act His Majesty in Council is empowered, for the purpose of facilitating the transition in Burma from the provisions of the Government of India Act to the provisions of the Act, to direct that the Act shall in Burma during a limited period have effect subject to adaptations and modifications, and to make other temporary provisions for the purpose of removing any difficulties arising in relation to the said transition:

AND WHEREAS a draft of this Order was laid before Parliament in accordance with the provisions of sub-section (1) of section one hundred and fifty-seven of the Act and an Address has been presented to His Majesty by both Houses of Parliament praying that an Order may be made in the terms of this Order:

NOW, THEREFORE, His Majesty, in the exercise of the powers conferred by the said sections one hundred and thirty-four, sixty-eight and one hundred and fifty-six and of all other powers enabling him in that behalf, is pleased, by and with the advice of His Privy Council, to order and it is hereby ordered as follows:—

General.

1. This order may be cited as "The Government of Burma (Miscellaneous Financial Provisions) Order, 1937."

2. The Interpretation Act, 1889, applies for the interpretation of this Order as it applies for the interpretation of an Act of Parliament.

Payment to India for 1937-38.

3. (1) There shall, in the year commencing on the separation of Burma from India, be paid to the revenues of the Governor-General in Council out of the revenues of Burma the sum of 3,23,01,000 rupees. and the said sum shall be charged on the revenues of Burma.

(2) In subsequent years there shall be paid to the revenues of the Governor General in Council or the Federation out of the revenues of Burma such sums as His Majesty in Council may hereafter determine.

Shan States Federal Fund.

4. (1) In this paragraph "the Fund" means "the Federal Fund of the Federated Shan States"; and "the States" means "the States comprised within the Federated Shan States."

(2) Subject to such adjustments as may be necessary to give effect to any Order in Council which may hereafter be made under section sixty-eight of the Act, there shall be made in the year beginning on the commencement of the Act and in the following year such contributions and payments—

(*a*) to the Fund out of the revenues of, or accruing in, the States;

(*b*) to the Fund out of the revenues of Burma; and

(*c*) out of the Fund to the revenues of Burma.

as the Governor in his discretion may direct; and any such contributions and payments shall be made at such times as the Governor in his discretion may direct.

(3) The Governor in his discretion may borrow for the purposes and on the security of the Fund within such limits as may from time to time be fixed by the Secretary of State, and there shall be paid out of the Fund such sums as are necessary to discharge any payments of principal

or interest falling to be made in respect of any such borrowings and in respect of any borrowings of the Fund before the commencement of the Act from the revenues of India:

Provided that nothing in this sub-paragraph shall authorize any borrowing in sterling.

Existing Railway Funds.

5. Until a declaration is made by His Majesty in Council under sub-section (1) of section seventy-seven of the Act as to the sum which represents the amount of the existing Railway Funds attributable to the railways in Burma, the said section shall have effect as if the said sum were 3,74,44,000 rupees, and on His Majesty making such a declaration as aforesaid such adjustments shall be made in respect of any transactions under the said section before the making of the declaration as may be necessary to give effect to the declaration as from the commencement of the Act.

M. P. A. Hankey.

THE INDIA AND BURMA (TRADE REGULATION) ORDER, 1937.

AT THE COURT AT BUCKINGHAM PALACE,

The 18th day of March, 1937.

PRESENT:

THE KING'S MOST EXCELLENT MAJESTY IN COUNCIL.

Whereas by section one hundred and sixty of the Government of India Act, 1935 (hereafter in this Order referred to as "the India Act"), and section one hundred and thirty-five of the Government of Burma Act, 1935 (hereafter in this Order referred to as "the Burma Act"), His Majesty is empowered, with a view to preventing undue disturbance of trade between India and Burma in the period immediately following the separation of India and Burma and with a view to safeguarding the economic interests of Burma during that period, to give by Order in Council such directions as he thinks fit for those purposes with respect to the duties which are, while the Order is in force, to be levied on goods imported into or exported from India or Burma, and with respect to ancillary and related matters:

And whereas a draft of this Order has been laid before Parliament in accordance with the provisions of sub-section (1) of section three hundred and nine of the India Act and sub-section (1) of section one hundred and fifty-seven of the Burma Act, and an Address has been presented to His Majesty by both Houses of Parliament praying that an Order may be made in the terms of this Order:

Now, therefore, His Majesty in the exercise of the said powers and of all other powers enabling him in that behalf, is pleased by and with the advice of his Privy Council to order, and it is hereby ordered as follows:

PART I.

Introductory and General.

1. This Order may be cited as the India and Burma (Trade Regulation) Order, 1937.

2. The Interpretation Act, 1889, applies for the interpretation of this Order as it applies for the interpretation of an Act of Parliament.

3. In this Order—

"duty" means a customs duty payable on importation or exportation, or a cess payable on exportation;

"import duty" means a duty payable on importation;

"separation" means the separation of India and Burma.

4. Any question arising under this Order whether any goods have been produced or manufactured in any country shall be determined by the reference to the same tests as are at the date of separation applicable to the determination of similar questions for customs purposes in India.

5. In the event of any dispute between the Governor-General of India and the Governor of Burma as to the interpretation or application of any of the provisions of this Order (including any dispute as to whether any consent requisite under this Order has been unreasonably withheld) the dispute shall be referred to the Secretary of State and his decision shall be final.

6. Any reference in this Order to any Act shall, except so far as the contrary is expressly provided, be construed as a reference to that Act as for the time being in force in India or Burma, as the case may be.

7. This Order shall come into force on separation and shall remain in force for three years or until twelve months have elapsed from the giving by the Governor-General of India to the Governor of Burma, or by the Governor of Burma to the Governor-General of India, of notice to terminate the operation thereof, whichever is the longer period.

PART II.

Provisions as to British India.

1. Except as otherwise provided in this Order, no duties shall be leviable in British India on goods imported from, or exported to, Burma, in excess of the duties, if any, which are so leviable immediately before separation:

Provided that this paragraph shall not apply—

(*a*) to opium, salt, salted fish or spirit; or

(*b*) to goods brought into Burma from places outside British India and Burma and, without payment of duty in Burma, brought thence into British India; or

(*c*) if Burma ceases to be a party to the International Tea Restriction Scheme as applicable to India, to tea.

2. Except as otherwise provided in this Order all goods imported from, or exported to, a customs port or customs aerodrome in Burma shall in British India be deemed for the purposes of the Sea Customs Act, 1878, to be goods imported from, or exported to, a customs port or customs aerodrome in British India

3. No prohibitions or restrictions on import or export other than such as are specified in the Schedule to this Order shall have effect in British India with respect to the bringing of goods into British India from Burma or from British India into Burma.

4.—(1) The duties levied in British India immediately before separation on goods imported into British India from places outside Burma and India, or exported from British India into places outside British India and Burma, may only be reduced or abolished with the previous consent of the Governor of Burma:

Provided that—

(*a*) import duties on goods which at the date of separation are not produced or manufactured in Burma may be reduced or abolished if not less than two months before the reduction or abolition takes effect the Governor-General of India has given to the Governor of Burma notice of the intended reduction or abolition;

(*b*) if under paragraph four of Part III of this Order the Governor of Burma has given notice to the Governor-General of India of the reduction or abolition in Burma of import duties on any goods which at the date of separation are not produced or manufactured in India, import duties on such goods may be reduced or abolished in British India.

(2) Any consent of the Governor-General of India required under paragraph four of Part III of this Order to the reduction or abolition of any duty in Burma shall not be unreasonably withheld.

5.—(1) For the purposes of section three of the Indian Cotton Cess Act, 1923, and section three of the Indian Lac Cess Act, 1930, cotton, or lac (including refuse lac) produced in Burma shall in British India be deemed to have been produced in India.

(2) If at any time the cess leviable under either of the said Acts on any goods when exported from British India is higher than the cess leviable in Burma on similar goods when exported from Burma, a cess may be levied on those goods when exported from British India into Burma equal to the difference between the said cesses.

(3) If while this Order is in force a new cess is imposed in Burma on the exportation to countries outside India and Burma of any goods produced or manufactured in Burma, then, if any goods so manufactured or produced are without payment of the cess imported into British India, a cess of the same amount shall be levied in British India on the re-exportation of those goods to any country outside India and Burma.

6. If at any time the duty leviable on the importation into British India of any goods is higher than the duty leviable in Burma on such goods on importation into Burma, a duty may be levied in British India on the importation of those goods from Burma not exceeding the difference between the said duties.

7. If and so long as an excise duty is leviable in British India on any goods produced or manufactured therein, a countervailing import duty (not exceeding the excise duty) may be imposed on similar goods produced or manufactured in Burma:

Provided that—

(*a*) any such countervailing duty on steel ingots or on articles manufactured therefrom, may be imposed at any rate not exceeding the appropriate rate of refund authorised by section seven of the Iron and Steel Duties Act, 1934; and

(*b*) except in the case of goods mentioned in item forty of Part II of the Seventh Schedule to the India Act, no countervailing duty shall be leviable at a rate higher than that which will afford to goods produced or manufactured in Burma the same advantage as before separation over goods produced or manufactured outside Burma and India.

8. Notwithstanding anything in this Part of this Order, any duties at any rate may be levied in British India on goods imported or exported by land from or to any country outside India and Burma:

Provided that in fixing those duties and in the administration of the land customs, due regard shall be had to the principles underlying this Order, and if the import of any class of goods by land otherwise than on payment of the duties leviable on similar goods imported by sea or air affects seriously, or is likely to affect seriously, the advantages enjoyed by Burma under this Order, such steps, if any, shall be taken for safeguarding the interests of Burma as the local conditions may permit.

9. The provisions of the Sea Customs Act, 1878, and of any rules for the time being in force thereunder relating to, and to goods imported or exported in, coasting vessels shall, notwithstanding separation, continue to apply in relation to, and to goods imported or exported in, vessels plying between ports in Indian and ports in Burma, as they apply in relation to, and to goods imported or exported in, ships plying between ports in India.

10. The definitions of "home trade ships" and "coasting ships" in sections two and thirty-seven A of the Indian Merchant Shipping Act, 1923, and the provisions of section two hundred and eighteen of that Act (which confers exemptions from the provisions of that Act relating to load lines) shall, notwithstanding separation, have effect in British India as if no distinction existed between India and Burma.

11.—(1) Nothing in this Part of this Order shall be construed as restricting in any way the exercise of any of the powers conferred by section twenty-three of the Sea Customs Act, 1878, or sections three, four and eleven of the Indian Tariff Act, 1934, but in exercising, or authorising the exercise of any of those powers the Governor-General shall have due regard to the interests of Burma and to the principles underlying this Order, and, except where it appears to him impracticable or unnecessary so to do, shall previously consult the Governor of Burma.

(2) References in this paragraph to any enactment are references to that enactment as in force on the first day of January, nineteen hundred and thirty-seven.

PART III.

Provisions as to Burma.

1. Except as otherwise provided in this Order, no duties shall be leviable in Burma on goods imported from, or exported to, British India in excess of the duties, if any, which are so leviable immediately before separation:

Provided that this paragraph shall not apply—

(*a*) to opium, salt, salted fish or spirit; or

(*b*) to goods brought into British India from places outside British India and Burma and, without payment of duty in British India, brought thence into Burma; or

(*c*) if Burma ceases to be a party to the International Tea Restriction Scheme as applicable to India, to tea.

2. Except as otherwise provided in this Order, all goods imported from or exported to, a customs port or customs aerodrome in British India shall in Burma be deemed for the purposes of the Sea Customs Act, 1878, to be goods imported from, or exported to, a customs port or customs aerodrome in Burma.

3. No prohibitions or restrictions on import or export other than such as are specified in the Schedule to this Order shall have effect in Burma with respect to the bringing of goods into Burma from British India or from Burma into British India.

4.—(1) The duties levied in Burma immediately before separation on goods imported into Burma from places outside Burma and British India, or exported from Burma into places outside Burma and British India, may only be reduced or abolished with the previous consent of the Governor-General of India:

Provided that—

(*a*) import duties on goods which at the date of separation are not produced or manufactured in India may be reduced or abolished if not less than two months before the reduction or abolition takes effect the Governor of Burma has given to the Governor-General of India notice of the intended reduction or abolition;

(*b*) if under paragraph four of Part II of this Order the Governor-General of India has given notice to the Governor of Burma of the reduction or abolition in British India of import duties on any goods which at the date of separation are not produced or manufactured in Burma, import duties on such goods may be reduced or abolished in Burma.

(2) Any consent of the Governor of Burma required under paragraph four of Part II of this Order to the reduction or abolition of any duty in British India shall not be unreasonably withheld.

5.—(1) For the purposes of section three of the Indian Cotton Cess Act, 1923, and section three of the Indian Lac Cess Act, 1930, cotton or lac (including refuse lac) produced in British India shall in Burma be deemed to have been produced in Burma.

(2) If at any time the cess leviable under either of the said Acts on any goods when exported from Burma is higher than the cess leviable in British India on similar goods when exported from British India a cess may be levied on those goods when exported from Burma into British India equal to the difference between the said cesses.

(3) If while this Order is in force a new cess is imposed in British India on the exportation to countries outside India and Burma of any goods produced or manufactured in British India, then, if any goods so manufactured or produced are without payment of the cess imported into Burma, a cess of the same amount shall be levied in Burma on the re-exportation of those goods to any country outside India and Burma.

6. If at any time the duty leviable on the importation into Burma of any goods is higher than the customs duty leviable in British India on such goods on importation into British India, a duty may be levied in Burma on the importation of those goods from British India not exceeding the difference between the said duties.

7. If and so long as an excise duty is leviable in Burma on any goods produced or manufactured therein, a countervailing import duty (not exceeding the excise duty) may be imposed on similar goods produced or manufactured in British India:

Provided that—

(*a*) any such countervailing duty on steel ingots or on articles manufactured therefrom, may be imposed at any rate not exceeding the appropriate rate of refund authorised by section seven of the Iron and Steel Duties Act, 1934; and

(*b*) except in the case of goods mentioned in item forty of Part II of the Seventh Schedule to the India Act, no countervailing duty shall be leviable at a rate higher than that which will afford to goods produced or manufactured in British India the same advantage as before separation over goods produced or manufactured outside India and Burma.

8. A duty may be imposed in Burma on rice exported to India not exceeding that imposed on rice exported to other countries.

9.—(1) If at any time a limit is imposed on the quantity of Japanese cotton piece goods that may be imported into India, the Governor of Burma shall also by notification impose a limit on the quantity of such goods that may be imported into Burma.

(2) The said limit shall be such as to secure that the quantity of Japanese cotton piece goods imported into Burma from places outside India in each year does not exceed the total quantity of such goods imported into Burma from places outside India during the financial year commencing on the first day of April, nineteen hundred and thirty-four.

(3) Subject as aforesaid, the notification may impose separate limits with respect to particular classes of such goods.

10. Notwithstanding anything in this Part of this Order, any duties at any rate may be levied in Burma on goods imported or exported by land from or to any country outside India and Burma:

Provided that in fixing those duties and in the administration of the land customs, due regard shall be had to the principles underlying this Order, and if the import of any class of goods by land otherwise than on payment of the duties leviable on similar goods imported by sea or air affects seriously, or is likely to affect seriously, the advantages enjoyed by British India under this Order, such steps if any shall be taken for safeguarding the interests of British India as the local conditions may permit.

11. The provisions of the Sea Customs Act, 1878, and of any rules for the time being in force thereunder relating to, and to goods imported or exported in, coasting vessels shall notwithstanding separation, continue to apply in relation to, and to goods imported or exported in vessels plying between ports in India and ports in Burma as they apply in relation to, and to goods imported or exported in ships plying between ports in Burma.

12. The definitions of "home trade ships" and "coasting ships" in sections two and thirty-seven A in the Indian Merchant Shipping Act, 1923, and the provisions of section two hundred and eighteen of that Act (which confers exemption from the provisions of that Act relating to load lines) shall have effect as if no distinction existed between India and Burma.

13.—(1) Nothing in this part of this Order shall be construed as restricting in any way the exercise of any of the powers conferred by section twenty-three of the Sea Customs Act, 1878, or sections three, four and eleven of the Indian Tariff Act, 1934, but in exercising, or authorising the exercise of, any of those powers the Governor shall have due regard to the interests of British India and to the principles underlying this Order, and, except where it appears to him impracticable or unnecessary so to do, shall previously consult the Governor-General of India.

(2) References in this paragraph to any enactment are references to that enactment as in force on the first day of January, nineteen hundred and thirty-seven, subject however, to any adaptations made therein under section one hundred and forty-nine of the Burma Act.

14.—(1) If His Majesty's Representative for the exercise of the functions of the Crown in its relations with Indian States certifies with respect to any Indian State that the provisions of Part II of this Order will, with any necessary adaptations and modifications, be applied, so far as is reasonably practicable; in and in relation to that State as they are applied in and in relation to British India, then, unless and until the certificate is revoked by His Majesty's said Representative, the provisions of this Part of this Order shall have effect as if references to British India were references to British India and that State.

(2) A certificate for the purposes of this paragraph may be given before separation by the Governor-General of India.

M. P. A. Hankey.

SCHEDULE.

Permissible Prohibitions and Restrictions.

1. Prohibitions or restrictions imposed for the purposes of public security.

2. Prohibitions or restrictions imposed on moral or humanitarian grounds.

3. Prohibitions or restrictions regarding traffic in arms, ammunition and implements of war and, in exceptional circumstances, prohibitions or restrictions on other military supplies.

4. Prohibitions or restrictions imposed for the protection of public health or for the protection of animals or plants against disease, insects or harmful parasites.

5. Export prohibitions or restrictions imposed for the protection of national treasures of artistic, historic or archaoelogical value.

6. Prohibitions or restrictions designed to extend to goods produced or manufactured in countries other than India or Burma the regime established within British India or, as the case may be, Burma, in respect of the production of, trade in, and transport and consumption of, native products of the same kind.

7. Prohibitions or restrictions arising out of any obligation which India or Burma may have undertaken by virtue of its adherence to any scheme for restricting the production or export of tea, rubber or any other commodity.

THE INDIA, BURMA AND ADEN (TRANSITORY PROVISIONS) (TAXATION) ORDER, 1937.

AT THE COURT AT BUCKINGHAM PALACE,

The 18th day of March, 1937.

PRESENT:

THE KING'S MOST EXCELLENT MAJESTY IN COUNCIL.

Whereas by section three hundred and ten of the Government of India Act, 1935 (hereafter in this Order referred to as "the India Act"), and by section one hundred and fifty-six of the Government of Burma Act, 1935 (hereafter in this Order referred to as "the Burma Act"), His Majesty in Council is empowered, for the purpose of facilitating the transition from the provisions of the Government of India Act, to make temporary provision for the purpose of removing any difficulties arising in relation to the said transition:

And whereas a draft of this Order has been laid before Parliament in accordance with the provisions of sub-section (1) of section three hundred and nine of the India Act and sub-section (1) of section one hundred and fifty-seven of the Burma Act, and an Address has been presented to His Majesty by both Houses of Parliament praying that an Order may be made in the terms of this Order:

Now, therefore, His Majesty, in the exercise of the said powers and of all other powers enabling him in that behalf, is pleased, by and with the advice of His Privy Council, to order, and it is hereby ordered, as follows:—

1. This Order may be cited as the India, Burma and Aden (Transitory Provisions) (Taxation) Order, 1937.

2. The Interpretation Act, 1889, applies for the interpretation of this Order as it applies for the interpretation of an Act of Parliament.

3. In this Order—

"separation" means the separation of Burma and Aden from India;

"the three countries" means India, Burma and Aden;

"Central taxation" means all taxes, duties, charges, fines and penalties payable or about to become payable under, or in accordance with the provisions of, the Acts specified in the Schedule to this Order;

"outstanding Central taxation" means Central taxation which had become payable before separation, or which could have become payable before separation if the existence and extent of the liability had been determined in time.

4.—(1) Separation shall not affect—

(*a*) the amount payable by any person in respect of outstanding Central taxation;

(*b*) the amounts to be allowed, by way of drawback, refund, rebate, or credit in assessment, to any person in respect of Central taxation paid, or treated as paid, before separation, or in respect of deposits made before separation as security for payment of Central taxation, or in respect of outstanding Central taxation paid after separation.

(2) The said amounts shall remain or become payable, or, as the case may be, be allowed, in the same places as if separation had not taken place, and the enactments relating to the assessment, demand and recovery of Central taxation shall throughout the three countries, continue to apply, as nearly as may be, in relation to those amounts as if there had been no separation:

Provided that any amount paid or allowed after separation shall be paid or allowed for the benefit or at the expense of the Government of that one of those countries in which the place in which the amount first became payable or was allowed is situated, and where any amount which became payable in one of the three countries is recovered in another, any necessary adjustments shall be made between the revenues of those countries accordingly

5. After separation the same consequences shall flow in each of the three countries from the stamping outside that country of any document executed before separation, as would have flowed therefrom if there had been no separation.

M. P. A. Hankey.

SCHEDULE.

The Indian Income-tax Act, 1922.

The Sea Customs Act, 1878.

The Land Customs Act, 1924.

The Motor Spirit (Duties) Act, 1917.

The Indian Finance Act, 1922.

The Silver (Excise Duty) Act, 1930.

The Sugar (Excise Duty) Act, 1934.

The Matches (Excise Duty) Act, 1934.

'The Mechanical Lighters' (Excise Duty) Act, 1934.

The Iron and Steel (Duties) Act, 1934.

E. CONRAN-SMITH,
Joint Secy. to the Government of India.

LEGISLATIVE DEPARTMENT.

NOTIFICATION.

New Delhi, the 1st April, 1937.

No. F.-344/36-C. & G. (I).—In exercise of the powers conferred by sections 64 and 129-A of the Government of India Act as set out in the Ninth Schedule to the Government of India Act, 1935, the Governor General in Council, with the sanction of the Secretary of State, is pleased to direct that the following further amendments shall be made in the Council of State Electoral Rules, namely:—

1. In rule 2, for clause (*a*) the following clauses shall be substituted, namely:—

"(*a*) 'the Act' means the Government of India Act and includes the provisions thereof set out with amendments in the Ninth Schedule to the new Act;

(*aa*) 'the new Act' means the Government of India Act, 1935;".

2. For rule 3 the following rule shall be substituted, namely:—

"3. The Council of State shall consist of—

(1) thirty-two elected members, and

(2) twenty-six members nominated by the Governor General of whom not more than twenty may be officials."

3. After rule 4 the following rule shall be inserted, namely:—

"4A. If immediately before the 1st April, 1937, the seat of the person nominated under rule 3 as theretofore in force as the result of an election held in Berar is not vacant, nothing in rule 3 or rule 4 shall be deemed to render his seat vacant, and, for the purposes of rules 3, 4 and 26, the persons so nominated shall be deemed to be an elected member, and to have been elected by the Berar Constituency specified in Schedule I.".

4. In rule 5—

(1) in sub-rule (1)—

(*a*) clause (*b*) shall be omitted and clauses (*c*) to (*h*) shall be re-lettered (*b*) to (*g*).

(*b*) in the first proviso, for the words "Legislative Council" the word "Legislature" shall be substituted.

(*c*) the second proviso shall be omitted;

(2) in the proviso to sub-rule (2), for the words "and with the previous approval of the Governor General in Council, the local Government of a Province" the words "the Governor General in Council" shall be substituted, and the words "to represent any constituency within that province" shall be omitted;

(3) in sub-rule (3), after the word "rules" the words "or Order in Council" and after the words "the Act" the words "or the new Act" shall be inserted; and

(4) in sub-rule (4)—

(*a*) for the words "the Act" the words "the Act or the new Act or in respect of a primary election held under the new Act" shall be substituted,

(*b*) for the words "the rules" the words "any rules or Order in Council" shall be substituted, and

(*c*) for the words "the date of such election:" the words "the date by which a return was required to be lodged:" shall be substituted.

5. In rule 6, in clause (*c*) of sub-rule (1), for the words "or in the province of Burma" the words "and Berar" shall be substituted.

6. In rule 7—

(1) in sub-rule (1)—

(*a*) clause (*b*) shall be omitted and clauses (*c*) to (*h*) shall be re-lettered (*b*) to (*g*),

(*b*) in the first proviso, for the words "Legislative Council" the word "Legislature" shall be substituted,

(*c*) the second proviso shall be omitted;

(2) in sub-rule (2), for the word "rules" the words "rules or Order in Council" and for the words "the Act" the words "the Act or the new Act" shall be substituted.

7. In rule 9—

(1) in sub-rule (2)—

(*a*) for the words "The regulations for the time being in force in any province for the purpose of elections to the Legislative Council of that province" the following shall be substituted, namely:—

"Subject to the provisions of these Rules the Governor General in Council shall make regulations";

(*b*) for the words "shall apply for the purpose of the holding of elections within that province to the Council of State:" the following shall be substituted, namely:—

"and may make such regulations to provide for other matters incidental or ancillary to the preparation and revision of the roll as he may consider desirable. Such regulations may be made as to rolls generally or any class of rolls or any particular roll.";

(c) for the proviso the following shall be substituted, namely:—

"Provided that the regulations in regard to the said matters which were in force immediately before the 1st April, 1937, shall continue in force but may be revoked, varied or added to by regulations made under this sub-rule;

Provided further that powers conferred and duties imposed on the Local Government or its officers by the regulations in force immediately before the said date shall be exercised and discharged by the Governor General in Council or, as the case may be, by such officers of the Governor General in Council as he may designate in this behalf unless with the consent of the Government of a Province functions in connection with the exercise and discharge of such powers and duties are entrusted to such Government and its officers;"

(2) in sub-rule (3), for the words "as may be prescribed by the regulations aforesaid for the republication of electoral rolls of constituencies of the Legislative Council" the words "as the Governor General in Council may by regulation prescribe" shall be substituted;

(3) after sub-rule (7) the following sub-rule shall be inserted, namely:—

"(8) Nothing in this rule shall affect the operation of paragraph 8 of the India and Burma (Transitory Provisions) Order, 1937, in respect of the discharge of functions under this rule or under regulations made thereunder."

8. In rule 11—

(1) for the words "The local Government", where they first occur in sub-rule (2), the following shall be substituted, namely:—

"The Governor General in Council or where the Government of a Province consents to the entrustment of the function to itself such Government";

(2) for the words "the local Government", where they occur for the second time in sub-rule (2) and where they occur in sub-rules (6) and (8), the words "the Governor General in Council or the Government of the Province as the case may be" shall be substituted.

9. In rule 13, for the words "the local Government" the words "the Governor General in Council or the Government of the Province as the case may be" shall be substituted.

10. In rule 15—

(1) for the figures "15" the figures and brackets "15(1)" shall be substituted;

(2) for the words "The regulations for the time being in force in any province for the purpose of elections to the Legislative Council of that province" the following shall be substituted, namely:—

"Subject to the provisions of these rules the Governor General in Council shall make regulations";

(3) the words "shall apply for the purpose of the holding of elections within that province to the Council of State:" shall be omitted;

(4) for the proviso the following shall be substituted, namely:—

"Provided that the regulations in regard to the said matters which were in force immediately before the 1st April, 1937, shall continue in force, but may be revoked, varied or added to by regulations made under this sub-rule;

Provided further that powers conferred and duties imposed on the Local Government or its officers by the regulations in force immediately before the said date shall be exercised and discharged by the Governor General in Council or as the case may be by such officers of the Governor General in Council as he may designate in this behalf, unless with the consent of the Government of a Province functions in connection with the exercise and discharge of such powers and duties are entrusted to such Government and its officers";

(5) for the words "In particular the Governor General in Council may" the figure, brackets and words "(2) The Governor General in Council may" shall be substituted.

11. In sub-rule (5) of rule 19—

(1) for the words "local official Gazette" the words "Gazette or the local official Gazette as the case may be" shall be substituted;

(2) for the words "as the local Government may prescribe" the following shall be substituted, namely:—

"as the Governor General in Council may prescribe or in default of such prescription as was prescribed in the province concerned immediately before the 1st April, 1937";

Saving.

12. After rule 21 the following rule shall be inserted, namely:—

"21A. Nothing in this part shall affect the operation of paragraph 8 of the India and Burma (Transitory Provisions) Order, 1937, in respect of the discharge of functions under this Part or under regulations made thereunder.".

13. In rule 22—

(1) in sub-rule (1)—

(*a*) the words "Save as expressly provided in these rules in regard to the nomination of a person elected in Berar," shall be omitted,

(*b*) clause (*b*) shall be omitted and clauses (*c*) to (*h*) shall be re-lettered (*b*) to (*g*),

(*c*) in the first proviso, for the words "nomination to the Legislative Council" the words "election or nomination to the Legislature" shall be substituted,

(*d*) the second proviso shall be omitted;

(2) in the proviso to sub-rule (2), for the words "by order in this behalf" the words "by order of the Governor General in Council in this behalf" shall be substituted, and clauses (*a*) and (*b*) shall be omitted.

(3) in sub-rule (3), after the word "rules" the words "or Order in Council" and after the words "the Act" the words "or the new Act" shall be inserted; and

(4) in sub-rule (4)—

(*a*) for the words "this Act" the words "the Act or the new Act or in respect of a primary election held under the new Act" shall be substituted;

(*b*) for the words "the rules" the words "any rules or Order in Council" shall be substituted, and

(*c*) for the words "the date of the election:" the words "the date by which a return was required to be lodged:" shall be substituted;

14. To rule 24 the following proviso shall be added, namely:—

"Provided that if the person elected or nominated is the Ruler of an Indian State or the subject of such Ruler he may make the oath or affirmation in the form appointed in the Fourth Schedule to the new Act for such Ruler or subject as the case may be."

15. In rule 36, in clause (*a*) of sub-rule (2) after the words "the Act" the words, figures and brackets "or section 220 (3) of the new Act" shall be inserted.

16. In rule 43, for the *Explanation* the following Explanation shall be substituted, namely:—

"*Explanation.*—'Advocate General' means the Advocate General for the Federation or, where the Government of a Province consents to the entrustment of his functions to the Advocate General for a Province, the Advocate General for such Province."

17. In sub-rule (2) of rule 44—

(1) for the words "which does not amount to any form of bribery other than treating as hereinafter explained or to the procuring or abetment of personation, and if the Commissioners" the word "but" shall be substituted;

(2) in clause (*c*) after the words "limited character" the words "or took the form of customary hospitality which did not affect the result of the election" shall be inserted;

(3) the *Explanation* shall be omitted.

18. In Schedule I, in the List of Constituencies entitled to representation in every Council of State—

(1) in the column headed "Province" for the entry "Central Provinces" the entry "Central Provinces and Berar" shall be substituted;

(2) for the entries relating to the Burma and Burma Chamber of Commerce Constituencies, the following entry shall be substituted, namely:—

"Ditto ..	Berar ..	General	The Berar Division excluding the Melghat taluq of the Amraoti District.	1"

19. In Schedule II—

(1) in part I—

(*a*) for clause (*e*) of paragraph 9 the following clause shall be substituted, namely:—

"(*e*) is or has been a non-official member of either chamber of the Indian Legislature or of the Provincial Legislature constituted for Madras under the new Act or has been a non-official member of the Indian Legislative Council as constituted under the Government of India Act, 1915, or any Act repealed thereby, or of the Madras Legislative Council as constituted by the Act; or";

(*b*) in clause (*h*) of paragraph 9 the words "or is a member of the Council of the University of Rangoon" shall be omitted;

(2) in Part II—

(*a*) for clause (*f*) of paragraph 2, the following clause shall be substituted, namely:—

"(*f*) is or has been a non-official member of either chamber of the Indian Legislature or of the Provincial Legislature constituted for Bombay under the new Act or of the Legislative Assembly so constituted for Sind, or has been a non-official member of the Indian Legislative Council as constituted under the Government of India Act, 1915, or any Act repealed thereby, or of the Bombay Legislative Council as constituted by the Act; or";

(*b*) in clause (*h*) of paragraph 2, the words "or is a member of the Council of the University of Rangoon" shall be omitted;

(3) in Part III—

(*a*) for clause (*c*) of paragraph 4, the following clause shall be substituted, namely:—

"(*c*) is or has been a non-official member of either chamber of the Indian Legislature or of the Provincial Legislature constituted for Bengal under the new Act or has been a non-official member of the Indian Legislative Council as constituted under the Government of India Act, 1915, or any Act repealed thereby, or of the Bengal Legislative Council as constituted by the Act; or";

(*b*) in clause (*e*) of paragraph 4, the words "or is a member of the Council of the University of Rangoon" shall be omitted;

(4) in Part IV—

(*a*) for clause (*d*) of paragraph 3, the following clause shall be substituted, namely:—

"(*d*) is or has been a non-official member of either chamber of the Indian Legislature or of the Provincial Legislature constituted for the United Provinces under the new Act or has been a non-official member of the Indian Legislative Council as constituted under the Government of India Act, 1915, or any Act repealed thereby, or of the United Provinces Legislative Council as constituted by the Act; or";

(*b*) in clause (*f*) of paragraph 3, the words "or is a member of the Council of the University of Rangoon" shall be omitted;

(5) in Part V—

(*a*) for clause (*d*) of paragraph 5, the following clause shall be substituted, namely:—

"(*d*) is or has been a non-official member of either chamber of the Indian Legislature, or of the Legislative Assembly constituted for the Punjab by the new Act, or has been a non-official member of the Indian Legislative Council as constituted under the Government of India Act, 1915, or any Act repealed thereby, or of the Punjab Legislative Council constituted by the Act; or";

(*b*) in clause (*g*) of paragraph 5, the words "or is a member of the Council of the University of Rangoon" shall be omitted;

(6) in Part VI—

(*a*) for clause (*d*) of paragraph 4, the following clause shall be substituted, namely:—

"(*d*) is or has been a non-official member of either chamber of the Indian Legislature or of the Provincial Legislature, constituted for Bihar by or under the new Act, or of the Legislative

Assembly so constituted for Orissa, or has been a non-official member of the Indian Legislative Council as constituted under the Government of India Act, 1915, or any Act repealed thereby, or of the Bihar and Orissa Legislative Council as constituted by the Act; or";

(*b*) in clause (*f*) of paragraph 4, the words "or is a member of the Council of the University of Rangoon" shall be omitted;

(7) for Part VII, the following Part shall be substituted, namely:—

"PART VII.—THE CENTRAL PROVINCES AND BERAR.

Place of residence.

1. For the purposes of this Part of this Schedule, a person shall be deemed to have a place of residence in the constituency if he either—

(*a*) ordinarily lives in the constituency, or

(*b*) has his family dwelling house in the constituency and occasionally occupies it, or

(*c*) maintains in the constituency a dwelling house ready for occupation in charge of servants and occasionally occupies it.

Joint Families.

2. Where any estate or mahal, or a share of an estate or mahal or agricultural land is held, or where income-tax is paid jointly by the members of a joint family the family shall be adopted as the unit for deciding whether under this Part of this Schedule the requisite qualification exists, and it it does exist, the person qualified shall be the manager of the family:

Provided that the entry on an electoral roll of a person in his capacity as the manager of a joint family shall not disqualify him as an elector in his individual capacity.

The Central Provinces and Berar Constituencies.

3. A person shall be qualified as an elector for a constituency if he has a place of residence in the constituency and if he either—

(*a*) holds, in the Central Provinces, in proprietory right land the land revenue or kamil-jama of which is not less than Rs. 3,000; or

(*b*) holds, in Berar, in other than tenancy right, agricultural land of which the assessed or assessable land revenue is not less than Rs. 1,000; or

(*c*) was in the financial year preceding that in which the electoral roll or the list of amendments thereto as the case may be, for the time being under preparation is first published under these rules, assessed to income-tax on an income of not less than Rs. 20,000; or

(*d*) is or has been a non-official member of either chamber of the Indian Legislature, or of the Legislative Assembly constituted for the Central Provinces and Berar by the new Act, or has been a non-official member of the Indian Legislative Council as constituted under the Government of India Act, 1915, or any Act repealed thereby, or of the Central Provinces Legislative Council constituted by the Act; or

(*e*) is or has been a non-official president of a Municipal Committee established under the Central Provinces Municipal Act, 1903, or under the Central Provinces Municipalities Act, 1922, or under the Central Provinces Municipalities Act, 1922, as applied to Berar, or has been the non-official chairman of a Municipal Committee established under the Berar Municipal Law, 1886, or is or has been the non-official chairman of a district council established under the Central Provinces Local Self-Government Act, 1883, or, under the Central Provinces Local Self-Government Act, 1920, or under the Central Provinces Local Self-Government Act, 1920, as applied to Berar, or has been the non-official vice-chairman of a district board established under the Berar Rural Boards Law, 1885, or

(*f*) is or has been a Fellow or an Honorary Fellow or is a member of the Senate or Court of any University constituted by law in British India; or

(*g*) is recognized by the Government as the holder of the title of Shamsul Ulma or of the title of Mahamohopadhyaya."';

(8) in Part VIII—

(*a*) for clause (*c*) of paragraph 2 the following clause shall be substituted, namely:—

"(*c*) is or has been a non-official member of either chamber of the Indian Legislature or of the Provincial Legislature constituted for Assam under the new Act, or has been a non-official member of the Indian Legislative Council as constituted under the Government of India Act, 1915, or any Act repealed thereby, or of the Assam Legislative Council as constituted by the Act; or";

(*b*) in clause (*e*) of paragraph 2 the words "or is a member of the Council of the University of Rangoon" shall be omitted;

(9) Part IX shall be omitted.

20. In Schedule V—

(1) In Part I, after paragraph 3 the following paragraph shall be inserted, namely:—

Removal of voting paper.

"3A. The removal of a voting paper from the polling station during polling hours by any person with the connivance of a candidate or his agent.";

(2) in Part II—

(*a*) for paragraphs 4 and 5 the following paragraph shall be substituted, namely:—

False return of election expense.

"4. The making of any return of election expenses which is false in any material particular or the making of a declaration verifying any such return.";

(*b*) paragraphs 6 to 8 shall be renumbered 5 to 7, respectively.

G. H. SPENCE,

Secy to the Govt. of India.

LEGISLATIVE DEPARTMENT.

NOTIFICATION.

New Delhi, the 1st April, 1937.

No. F.-344/36-C. & G. (II).—In exercise of the powers conferred by sections 64 and 129-A of the Government of India Act, as set out in the Ninth Schedule to the Government of India Act, 1935, the Governor General in Council, with the sanction of the Secretary of State, is pleased to direct that the following further amendments shall be made in the Legislative Assembly Electoral Rules, namely:—

1. In rule 2, for clause (*a*) the following clauses shall be substituted, namely:—

"(*a*) 'the Act' means the Government of India Act and includes the provisions thereof set out with amendments in the Ninth Schedule to the new Act;

(*aa*) 'the new Act' means the Government of India Act, 1935;".

2. For rule 3 the following rule shall be substituted, namely:—

"3. The Legislative Assembly shall consist of—

(1) one hundred and two elected members, and

(2) thirty-nine members nominated by the Governor General of whom twenty-six shall be officials."

3. After rule 4 the following rule shall be inserted, namely:—

"4A. If immediately before the 1st April, 1937, the seat of the person nominated under rule 3 as theretofore in force as the result of an election held in Berar is not vacant, nothing in rule 3 or rule 4 shall be deemed to render his seat vacant, and, for the purposes of rules 3, 4 and 26, the person so nominated shall be deemed to be an elected member and to have been elected by the Berar Constituency specified in Schedule I."

4. In rule 5—

(1) in sub-rule (1)—

(*a*) clause (*b*) shall be omitted and clauses (*c*) to (*h*) shall be re-lettered (*b*) to (*g*),

(*b*) in the first proviso for the words "Legislative Council" the word "Legislature" shall be substituted,

(*c*) the second proviso shall be omitted;

(2) in the proviso to sub-rule (2), for the words "and with the previous approval of the Governor General in Council, the local Government of a Province" the words "the Governor General in Council" shall be substituted, and the words "to represent any constituency within that province" shall be omitted;

(3) in sub-rule (3), after the word "rules" the words "or Order in Council" and after the words "the Act" the words "or the new Act" shall be inserted; and

(4) in sub-rule (4)—

(*a*) for the words "the Act" the words "the Act or the new Act or in respect of a primary election held under the new Act" shall be substituted,

(*b*) for the words "the rules" the words "any rules or Order in Council" shall be substituted, and

(*c*) for the words "the date of such election:" the words "the date by which a return was required to be lodged:" shall be substituted.

5. In rule 6—

(1) In sub-rule (1) the words "or a constituency in the province of Burma" shall be omitted:

(2) for clause (*a*) of sub-rule (1) the following shall be substituted, namely:—

"(*a*) his name is entered on the electoral roll of the constituency or of another constituency of the Legislative Assembly situate in the same province;" and:

(3) in clause (*b*) of sub-rule (1), after the words "Central Provinces" the words "and Berar" shall be inserted;

(4) in sub-rule (2), for the words "or a constituency in the province of Burma or Delhi or Ajmer-Merwara" the words "or the Delhi or the Ajmer-Merwara constituency" shall be substituted.

6. In rule 7—

(1) In sub-rule (1)—

(*a*) clause (*b*) shall be omitted and clauses (*c*) (*h*) shall be re-lettered (*b*) to (*g*);

(*b*) in the first proviso for the words "Legislative Council" the word "Legislature" shall be substituted;

(*c*) the second proviso shall be omitted;

(2) in sub-rule (2), for the word "rules" the words "rules or Order in Council" and for the words "the Act" the words "the Act or the new Act" shall be substituted.

7. In rule 9—

(1) in sub-rule (2)—

(*a*) for the words "The regulations for the time being in force in any province for the purpose of elections to the Legislative Council of that province" the following shall be substituted, namely:—

"Subject to the provisions of these rules the Governor General in Council shall make regulations";

(*b*) for the words beginning with the words "shall apply for the purpose of the holding of elections within that province to the

Legislative Assembly" and ending with the words "the province of Ajmer-Merwara" the following shall be substituted, namely:—

"and may make such regulations to provide for other matters incidental or ancillary to the preparation and revision of the roll as he may consider desirable. Such regulations may be made as to rolls generally or any class of rolls or any particular roll";

(c) for the proviso the following shall be substituted, namely:—

"Provided that the regulations in regard to the said matters which were in force immediately before the 1st April, 1937, shall continue in force but may be revoked, varied or added to by regulations made under this sub-rule;

Provided further that powers conferred and duties imposed on the Local Government or its officers by the regulations in force immediately before the said date shall be exercised and discharged by the Governor General in Council or as case may be by such officers of the Governor General in Council as he may designate in this behalf unless with the consent of the Government of a Province functions in connection with the exercise and discharge of such powers and duties are entrusted to such Government and its officers";

(2) in sub-rule (3), for the words "as may be prescribed by the regulations aforesaid for the republication of electoral rolls of constituencies of the "Legislative Council" the words "as the Governor General in Council may by regulation prescribe" shall be substituted;

(3) after sub-rule (7) the following sub-rule shall be inserted, namely:—

"(8) Nothing in this rule shall affect the operation of paragraph 8 of the India and Burma (Transitory Provisions) Order, 1937, in respect of the discharge of functions under this rule or under regulations made thereunder."

8. In rule 11—

(1) for the words "the local Government", where they first occur in sub-rule (2), the following shall be substituted, namely:—

"the Governor General in Council or where the Government of a Province consents to the entrustment of the function to itself such Government";

(2) for the words "the local Government", where they occur for the second time in sub-rule (2) and where they occur in sub-rules (6) and (8), the words "the Governor General in Council or the Government of the Province as the case may be" shall be substituted.

9. In rule 13, for the words "the local Government", the words "the Governor General in Council or the Government of the Province as the case may be" shall be substituted.

10. In rule 15—

(1) for the figures "15" the figures and brackets "15(1)" shall be substituted;

(2) for the words "The regulations for the time being in force in any province for the purpose of elections to the Legislative Council of that province" the following shall be substituted, namely:—

"Subject to the provisions of these rules the Governor General in Council shall make regulations";

(3) the words beginning with the words "shall apply for the purpose of the holding of elections within that province to the Legislative Assembly," and ending with the words "the province of Ajmer-Merwara:" shall be omitted;

(4) for the proviso the following shall be substituted, namely:—

"Provided that the regulations in regard to the said matters which were in force immediately before the 1st April, 1937, shall continue in force but may be revoked, varied or added to by regulations made under this sub-rule:

Provided further that powers conferred and duties imposed on the Local Government or its officers by the regulations in force immediately before the said date shall be exercised and discharged by the Governor General in Council or as the case may be by such officers of the Governor General in Council as he may designate in this behalf, unless with the consent of the Government of a Province functions in connection with the exercise and discharge of such powers and duties are entrusted to such Government and its officers";

(5) for the words "In particular the Governor General in Council may" the figure, brackets and words "(2) The Governor General in Council may" shall be substituted.

11 In sub-rule (5) of rule 19—

(1) for the words "local official Gazette" the words "Gazette or the local official Gazette as the case may be" shall be substituted;

(2) for the words "as the local Government may prescribe" the following shall be substituted, namely:—

"as the Governor General in Council may prescribe or in default of such prescription as was prescribed in the province concerned immediately before the 1st April, 1937"

12. After rule 21 the following rule shall be inserted, namely:—

Saving

"21-A. Nothing in this Part shall affect the operation of paragraph 8 of the India and Burma (Transitory Provisions) Order, 1937, in respect of the discharge of functions under this Part or under regulations made thereunder."

13. In rule 22—

(1) In sub-rule (1)—

(*a*) the words "Save as expressly provided in these rules in regard to the nomination of a person elected in Berar," shall be omitted,

(*b*) clause (b) shall be omitted and clauses (c) to (h) shall be re-lettered (b) to (g).

(*c*) in the first proviso, for the words "nomination to the Legislative Council" the words "election or nomination to the Legislature" shall be substituted,

(*d*) the second proviso shall be omitted;

(2) in the proviso to sub-rule (2), for the words "by order in this behalf" the words "by order of the Governor General in Council in this behalf" shall be substituted, and clauses (a) and (b) shall be omitted;

(3) in sub-rule (3), after the word "rules" the words "or Order in Council" and after the words "the Act" the words "or the new Act" shall be inserted; and

(4) in sub-rule (4)—

(*a*) for the words "this Act" the words "the Act or the new Act or in respect of a primary election held under the new Act" shall be substituted;

(*b*) for the words "the rules" the words "any rules or Order in Council" shall be substituted, and

(*c*) for the words "the date of the election:" the words "the date by which a return was required to be lodged:" shall be substituted.

14. To rule 24 the following proviso shall be added, namely:—

"Provided that if the person elected or nominated is the Ruler of an Indian State or the subject of such Ruler he may make the oath or affirmation in the form appointed in the Fourth Schedule to the new Act for such Ruler or subject as the case may be."

15. In rule 36, in clause (*a*) of sub-rule (2), after the words "the Act" the words, figures and brackets "or section 220 (3) of the new Act" shall be inserted.

16. In rule 43, for the *Explanation* the following Explanation shall be substituted, namely:—

"*Explanation.*—'Advocate General' means the Advocate General for the Federation or, where the Government of a Province consents to the entrustment of his functions to the Advocate General for a Province, the Advocate General for such Province."

17. In sub-rule (2) of rule 44—

(1) for the words "which does not amount to any form of bribery other than treating as hereinafter explained or to the procuring or abetment of personation, and if the Commissioners" the word "but" shall be substituted;

(2) in clause (*c*), after the words "limited character" the words "or took the form of customary hospitality which did not affect the result of the election" shall be inserted;

(3) the *Explanation* shall be omitted.

18. In Schedule I, in the List of Constituencies entitled to representation in every Legislative Assembly—

(1) in the column headed "Province" for the entry "Central Provinces" the entry "Central Provinces and Berar" shall be substituted;

(2) After the entry relating to the Central Provinces Landholders Constituency, the following entry shall be inserted, namely:—

"Ditto ..	Berar ..	Non-Muhammadan.	The Berar Division excluding the Melghat taluq of the Amraoti District.	1"

(3) the entries relating to the Burma (Non-European) and the Burma (European) Constituencies shall be omitted.

19. In Schedule II—

(1) in Part I, in paragraph 8, for the words "Landholders' constituency of the Legislative Council of the Governor of Madras" the words "Landholders' constituency of the Legislative Assembly constituted under the new Act for the province of Madras" shall be substituted;

(2) in Part II, in paragraph 7, for the words "either European constituency of the Legislative Council of the Governor of Bombay" the words "any European constituency of the Legislative Assembly constituted under the new Act for the province of Bombay or of the Legislative Assembly so constituted for the province of Sind" shall be substituted;

(3) for Part VII the following Part shall be substituted, namely:—

"PART VII.—THE CENTRAL PROVINCES AND BERAR.

Definitions.

1. For the purpose of this Part of this Schedule—

(*a*) 'previous year' means the financial year preceding that in which the electoral roll or the list of amendments thereto, as the case may be, for the time being under preparation is first published under these rules:

(*b*) 'urban area' means a municipality, notified area, cantonment or railway settlement and includes the Government gun-carriage factory estates at Jubbulpore.

Land records, etc., to be conclusive evidence.

2. For the purpose of determining any claim to a qualification under this Part of this Schedule, any entry in the land records or in any municipal or cantonment records shall be conclusive evidence of the facts stated therein.

Joint families.

3. Where any estate or mahal, or a share of an estate or mahal, or agricultural land is held or where income-tax is paid jointly by the members of a joint family the family shall be adopted

as the unit for deciding whether under this part of this Schedule the requisite qualification exists, and if it does exist the person qualified shall be the manager of the family:

Provided that the entry on an electoral roll of a person in his capacity as the manager of a joint family shall not disqualify him as an elector in his individual capacity.

Occupation of building.

4. For the purposes of this Part of this Schedule, a person who occupies a house or building other than a house or building in any military or police lines, or part of such a house or building, by virtue of any office, service or employment, shall, if the house or building is not inhabited by the person in whose service or employ he is, be deemed to occupy the house or building as a tenant.

Place of residence.

5. A person shall be deemed to have place of residence in a constituency if he—

(*i*) has actually dwelt in a house, or part of a house, within the constituency for an aggregate period of not less than 180 days during the calendar year preceding that in which the electoral roll for the time being under preparation is first published under these rules, or

(*ii*) has maintained within the constituency for an aggregate period of not less than 180 days during that year a house, or part of a house, as a dwelling for himself in charge of his dependants or servants, and has visited such house during that year.

General Constituencies.

Muhammadan and non-Muhammadan Constituencies.

6. A person shall be qualified as an elector for a general constituency if he has a place of residence in the constituency, and—

(*a*) owns or occupies as a tenant within an urban area in the constituency a house or building, or part of a house or building, the annual rental value of which is not less—

(*i*) in the case of a house or building in the Nagpur Municipality or in the Jubbulpore Municipality or Cantonment, or in the Amraoti City and Camp Municipalities, than Rs. 240, and

(*ii*) in the case of a house or building in any other urban area, than Rs. 180:

Provided that, where such house or building or part is held by two or more persons in shares, no person shall be qualified in respect of a share the annual rental value of which is less than Rs. 240 or Rs. 180 as the case may be; or

(*b*) is, in the Central Provinces, a proprietor or thekadar of an estate or mahal, or of a share of an estate or mahal, the land revenue or kamil-jama of which is not less than Rs. 300, or

(*c*) holds, in the Central Provinces, as a proprietor or thekadar in proprietary right, sir-land or khudkasht or, as a malik-makbuza, raiyat or tenant, agricultural land, the assessed or assessable revenue or rent of which is not less—

(*i*) in the case of land in the Raipur, Bilaspur, Drug, Chanda, Betul, and Mandla districts, than Rs. 90; or

(*ii*) in the case of land in the Bhandara, Balaghat, Nimar, Chhindwara districts, than Rs. 120; or

(*iii*) in the case of land in any other district, than Rs. 150; or

(*d*) holds, in the Constituency, in Berar, in other than tenancy right, agricultural land of which the assessed or assessable land revenue is not less—

(*i*) in the Yeotmal district, than Rs. 120, and

(*ii*) in all other districts, than Rs. 150; or

(*e*) was in the previous year assessed to income-tax:

Provided that—

(*i*) no person other than a Muhammadan shall be qualified as an elector for the Muhammadan constituency, and

(*ii*) no Muhammadan shall be qualified as an elector for a non-Muhammadan constituency.

Explanation.—For the purposes of clause (*c*) 'tenant' shall not include a sub-tenant or ordinary tenant of sir land; and for the purposes of clause (*d*) an ante-izara or ante-jagir tenant shall be deemed to hold agricultural land in other than tenancy right.

Special Constituency.

The Landholders' constituency.

7. A person shall be qualified as an elector for the Landholders' constituency if he has a place of residence in the constituency and if he either—

(*a*) is the holder of a hereditary title recognized by Government and holds agricultural land in proprietary right; or

(*b*) is the owner of an estate as defined in section 2 (3) of the Central Provinces Land Revenue Act, 1917; or

(*c*) holds land in proprietary right the land revenue or kamiljama of which is not less than Rs. 5,000".

(4) Part IX shall be omitted.

20. In Schedule V—

(1) in Part I, after paragraph 3, the following paragraph shall be inserted, namely:—

Removal of voting paper.

"3A. The removal of a voting paper from the polling station during polling hours by any person with the connivance of a candidate or his agent.";

(2) in Part II—

(*a*) for paragraphs 4 and 5 the following paragraph shall be substituted, namely:—

False return of election expenses.

"4. The making of any return of election expenses which is false in any material particular or the making of a declaration verifying any such return.";

(*b*) paragraphs 6 to 8 shall be renumbered 5 to 7, respectively.

G. H. SPENCE,
Secy. to the Govt. of India.

HOME DEPARTMENT.

NOTIFICATION.

ESTABLISHMENTS.

New Delhi, the 1st April 1937.

No. F. 322/35-Ests.—In exercise of the powers conferred by sub-section (2) of section 265 of the Government of India Act, 1935, the Governor General in his discretion is pleased to make the following regulations:—

REGULATIONS.

PART I.—PRELIMINARY.

1. These Regulations may be called the Federal Public Service Commission (Conditions of Service) Regulations.

2. In these Regulations, unless there is something repugnant in the subject or context,—

(*a*) "the Commission" means the Federal Public Service Commission;

(*b*) "compensatory allowance" means an allowance granted to meet personal expenditure necessitated by the special circumstances in which duty is performed;

(*c*) "Governor General" means the Governor General in his discretion;

(*d*) "Member" means a Member of the Commission and includes the Chairman thereof; and

(*e*) "Travel by air" means journeys performed in the machines of public air transport companies regularly plying for hire, but does not include journeys performed by private aeroplanes or air taxis.

A.—MEMBERS.

PART II.—COMPOSITION AND PAY AND TENURE.

3. The Commission shall consist of a Chairman and such number of other Members not exceeding four as the Governor General may from time to time appoint.

4. (1) The Chairman shall receive a pay of four thousand rupees and each of the other Members shall receive a pay of three thousand five hundred rupees a month.

(2) If a Chairman or Member at the time of his appointment as such is a retired Government servant the Governor General shall determine whether his pension shall be held in abeyance and, if so, whether wholly or in part; or in the alternative shall determine whether the pay fixed by this regulation shall be reduced by an amount not exceeding the amount of such pension, including such portion of it as may have been commuted, if the pension is allowed to be drawn in full.

5. A Member shall hold office for five years:

Provided that—

(*a*) the Governor General may from time to time extend a Member's tenure of office by any period not exceeding five years;

(*b*) a Member may by resignation under his hand addressed to the Governor General resign his office;

(*c*) the Governor General may at any time terminate the appointment of any Member if satisfied that that Member is for any reason unable or unfit to continue to perform the duties of his office;

(*d*) the term of five years shall include any period immediately before the coming into force of these regulations during which a Member held office as a Member of the Public Service Commission established under section 96-C of the Government of India Act.

6. An officiating appointment may be made by the Governor General in the place of any member absent on leave or on special duty, or on the occurrence of a vacancy in the office of a Member until some person has been permanently appointed to the office and has entered upon the discharge of the duties thereof.

PART III.—LEAVE.

7. A Member who at the date of his appointment was in the service of the Crown in India may be granted leave by the Governor General under the rules applicable to him immediately before his appointment, and his service as Member shall count for such leave.

8. A Member who at the date of his appointment was not in the service of the Crown in India may be granted leave by the Governor General as follows:—

(*a*) (*i*) if immediately before the coming into force of these regulations he was a Member of the Public Service Commission established under section 96C of the Government of India Act leave on leave salary equivalent to full pay up to one-eleventh of the period spent on duty as a Member, subject to a maximum of four months at any one time;

(*ii*) in cases other than that specified in sub-clause (*i*), leave on leave salary equivalent to full pay (to be taken not more than once during his tenure of office) for a period not exceeding four months.

(*b*) Leave on medical certificate on leave salary equivalent to half pay, subject to a maximum of three months at any one time.

(*c*) Extraordinary leave without allowances, subject to a maximum of three months at any one time.

Explanation.—All, or any two, of these kinds of leave may be granted in combination at one time.

PART IV.—PENSION.

9. No pension shall attach to the office of Member as such, but in the case of a Member who at the date of his appointment was in the service of the Crown in India, service as Member shall count for pension under the rules applicable to the service to which such Member belonged and shall, unless the Member be a member of the Indian Civil Service or entitled to a pension under Army Regulations, also count for the higher additional pension under Article 475A, Civil Service Regulations.

PART V.—EXPENSES FOR EQUIPMENT AND VOYAGE AND PASSAGE ALLOWANCE.

10. A sum of five hundred pounds sterling shall be payable for the expenses of equipment and voyage to a Member who at the time of his first appointment is domiciled and permanently resident elsewhere than in Asia and is neither a Member of a Government service in India nor a retired Member of such service who is at the said time, or was within a year of the said time, in the service of the Crown in India.

11. A Member who is, and was at the time of his first appointment, domiciled elsewhere than in Asia, may, on extension of his term of office under rule 5, be granted such passage allowances for himself and his family as the Governor General may prescribe.

PART VI.—TRAVELLING ALLOWANCES.

12. (1) A Member who at the date of his appointment was in the service of the Crown in India, may, on a journey by railway to join his post, at his option (*a*) draw travelling allowance at the rates provided for a journey on transfer by the rules applicable to him immediately before his appointment, or (*b*) travel at Government expense in a reserved first-class compartment.

(2) A Member who avails himself of alternative (*b*) shall pay to Government the fare which he would have paid if no accommodation had been reserved and shall, in addition, pay in cash, to the station

master of the station from which the journey commences, the fares for any of his family accompanying him, whether they share his reserved accommodation or not. When Government pays full tariff rates for the accommodation all such fares shall be credited to Government.

13. When a person who is not in the service of the Crown in India is appointed as a Member he may, when travelling by railway to join his post, travel in a reserved first-class compartment on the conditions prescribed in sub-rule (2) of rule 12.

14. A Member is entitled when travelling on duty—

(i) when travelling by railway, to a reserved first-class compartment, and to fares (if actually paid) for four servants at lowest class rates;

(ii) when travelling by steamer, to a reserved cabin (if one is available) and to fares (if actually paid) for four servants at lowest class rates, but not to any allowance on account of messing charges;

(iii) when travelling by road, to a mileage allowance at the rate of one rupee per mile;

(iv) (*a*) when travelling by air on authority, to the fare paid for the journey by air and, if actually paid, to the cost of transporting up to three maunds of luggage by rail at passenger rates, road or steamer and a lowest class fare for one servant, (*b*) when travelling by air otherwise than on authority, to the allowances to which he would have been entitled if he had gone by rail, road or steamer instead of by air; and

(v) to a daily allowance at the rate of Rs. 15 per day for each day on which he is absent on duty from his headquarters:

Provided that no daily allowance shall be drawn for any day wholly spent in travelling.

15. When a Member travels by railway—

(i) when proceeding on or returning from leave, or

(ii) when retiring from the service or proceeding to join another post after resigning office,

he may travel in a reserved first-class compartment on the conditions described in sub-rule (2) of rule 12.

PART VII.—OTHER COMPENSATORY ALLOWANCES.

16. Subject to the general condition that the amount of a compensatory allowance should be so regulated that the allowance is not on the whole a source of profit to the recipient, the Governor-General may, subject to any conditions which he sees fit to impose, grant to any Member any compensatory allowance other than travelling allowance and may fix the amount thereof.

B.—STAFF.

PART VIII.—COMPOSITION.

17. The Staff of the Commission shall include a Secretary, an Assistant Secretary, and such number of Superintendents, Assistants, Stenographers and Clerks, and also such number of inferior servants as the Governor General may from time to time determine:

Provided that the Commission may for special reasons employ temporary staff at a total cost not exceeding Rs 2,000 in any one year.

PART IX.—THE SECRETARY.

18. The Secretary shall be appointed by the Commission with the approval of the Governor General.

19. The Secretary shall hold office for a period of five years:

Provided that the Commission with the approval of the Governor General may extend the Secretary's tenure by a period not exceeding five years.

20. The Secretary shall receive pay in the time-scale of the service to which he belongs (where a senior time-scale exists, in the senior time-scale) or if he is in, or is promoted to, a selection grade in his own service, pay in such selection grade, and in addition a special pay of Rs. 400 a month, subject to a maximum of Rs. 2,250 in all exclusive of overseas pay.

PART X.—THE ASSISTANT SECRETARY.

21. The Assistant Secretary shall be appointed by the Commission.

22. The Assistant Secretary shall receive pay on the scale Rs. 750—25—900 a month.

23. The Assistant Secretary shall be subject to the same conditions of service as Assistant Secretaries to the Government of India, save that the authority who may impose any of the penalties prescribed in Rule 49 of the Civil Services (Classification, Control and Appeal) Rules shall be the Commission and that the appellant authority shall be the Governor-General.

PART XI.—MINISTERIAL ESTABLISHMENT.

24. The Superintendents, Assistants, Stenographers and Clerks, shall be appointed by the Secretary and receive pay and allowances as follows:—

(*a*) Those in the service of the Commission at the time of the making of these Regulations according to the rates and on the conditions to which they were then entitled;

(*b*) Those recruited after the making of these Regulations according to the rates and on the conditions prescribed from time to time for new entrants to corresponding grades in the Government of India Secretariat, except in the case of Superintendents, who shall receive pay on a scale of Rs. 450—20—550.

25. The Ministerial Establishment shall be subject to the same conditions of service as the personnel of the corresponding grades in the Government of India offices who were recruited at the same time, save that the authority who may impose any of the penalties prescribed in Rule 49 of the Civil Services (Classification, Control and Appeal) Rules shall be the Secretary and the appellate authority shall be the Chairman.

PART XII.—INFERIOR SERVANTS.

26. The inferior servants shall be appointed by the Secretary and their pay, allowances and conditions of service shall be the same as those of corresponding grades in the Government of India offices, save that the authority who may impose any of the penalties prescribed in Rule 49 of the Civil Services (Classification, Control and Appeal) Rules shall be the Assistant Secretary and the appellate authority shall be the Secretary.

PART XIII.—SUPPLEMENTARY.

27. In respect of any matter for which special provision is not made by these regulations, the conditions of service of a person serving as a member of the Commission or of its staff shall be governed by the rules and orders for the time being applicable to such classes of Government servants as shall be specified by the Governor-General.

R. M. MAXWELL,

Secretary to the Government of India.

HOME DEPARTMENT.

NOTIFICATION.

ESTABLISHMENTS.

New Delhi, the 1st April 1937.

No. F.-322/II/35-Ests.—In exercise of the powers conferred by sub-section (3) of section 266 of the Government of India Act, 1935, the Governor-General in his discretion is pleased to make the following regulations:—

1. These regulations may be called the Federal Public Service Commission (Consultation by the Governor-General) Regulations.

2. It shall not be necessary to consult the Commission in regard to any of the matters mentioned in clauses (*a*) and (*b*) of sub-section (3) of section 266 of the Government of India Act, 1935, in the case of—

(*i*) the services and posts specified in the Schedule to these regulations, or

(*ii*) any post to which the Governor-General is empowered to make an appointment in his discretion or exercising his individual judgment.

3. It shall not be necessary to consult the Commission in regard to the selection for appointment:—

(*a*) to a Central Service, Class I, of any officer of His Majesty's Forces or any officer who is already a member of an All-India Service, a Central Service, Class I, a Railway Service, Class I, or a Service under the Crown Department corresponding to a Central Service, Class I;

(*b*) to a Central Service, Class II, of any officer by transfer from another Central Service, Class II, or by promotion from a subordinate service; or by transfer or promotion from corresponding services under the Crown Department;

(*c*) to a tenure post in a Central Service, Class I, or a Central Service, Class II, of an officer of a Provincial Service;

(*d*) otherwise than in accordance with one of the methods mentioned in (*a*), (*b*) or (*c*) above, to the services or posts specified in the Schedule.

4. Notwithstanding anything contained in rule 3 it shall not be necessary to consult the Commission in the following cases:—

(*a*) in regard to the selection for appointment to any post where the selection is made in England by or through the High Commissioner for India;

(*b*) in regard to the selection for appointment to a temporary post if the post is not likely to last for more than one year, or in the case of an appointment for a period of more than one year but less than three years, if the Commission advises that the appointment may be made without consulting them.

Provided that, if a temporary appointment is extended beyond the period for which it was initially made, the period of the appointment shall, for the purposes of this rule, be reckoned from the date when the appointment was originally made and not from the date of the extension thereof.

5. It shall not be necessary to consult the Commission before an order is passed in any disciplinary case other than—

(*a*) an original order by the Governor General imposing any of the following penalties:—

(*i*) Withholding of increments or promotion, including stoppage at an efficiency bar,

(*ii*) Reduction to a lower post or time-scale, or to a lower stage in a time-scale;

(*iii*) Recovery from pay of the whole or part of any pecuniary loss caused to Government by negligence or breach of orders;

(*iv*) removal from service; or

(*v*) dismissal;

(*b*) an order by the Governor General on an appeal; or

(*c*) an order by the Governor General, proposed to be made in response to any petition or memorial, overruling or modifying the order of a subordinate authority.

Provided that it shall not be necessary for the Governor General to consult the Commission in cases relating to civilian personnel paid from the Defence Services estimates.

6. In discharging his functions under these regulations, the Governor General shall act in his discretion.

SCHEDULE.

CENTRAL SERVICES, CLASS I.

Home Department .. Director of Public Information.

Deputy Director of Public Information.

Government Examiner of Questioned Documents, Government of India.

Assistant Government Examiner of Questioned Documents, Government of India.

Assistant Director of the Intelligence Bureau.

Finance Department ..	Master, Security Printing, India and *Ex-Officio* Controller of Stamps.
	Deputy Master, and Assistant Master, Security Printing, India.
	Assistant Master, Currency Note Press.
	Deputy Controller of Stamps.
	Deputy Mint Master.
	Mint Master, Bombay.
	Mint Master, Calcutta.
	Chief Assayer, Mint, Bombay.
External Affairs Department—Baluchistan ..	Superintendent, Central Jail, Mach.
Department of Industries and Labour—Civil Aviation Directorate ..	Director of Civil Aviation in India.
	Deputy Director of Civil Aviation in India.
	Aircraft Inspector.
	Chief Inspector of Aircraft.
	Chief Aerodrome Officer.
	Technical Officer (Temporary).
Indian School of Mines	Principal and Professors
Indian Posts and Telegraphs Department ..	Assistant Deputy Directors General, Posts and Telegraphs, and Personal Assistant to the Director General, in the case of appointments to tenure posts.
Department of Education, Health and Lands ..	Director, and Professors of the All-India Institute of Hygiene and Public Health, Calcutta.
	The Medical Research Department.
	Superintendent, Mathematical Instruments Office, Survey of India.
	Director, Botanical Survey of India.

Miscellaneous ..	Agent of the Government of India in Ceylon.
	Agent of the Government of India in Malaya.
	Agent General for India in the Union of South Africa.
	Secretary to the Agent General for India in the Union of South Africa.
Legislative Department	Secretary.
	Joint Secretary and Draftsman.
	Deputy Secretary.
	Advocate-General.
	Solicitor to the Government of India.
	Second Solicitor to the Government of India.
	Assistant Solicitor to the Government of India.
Imperial Council of Agricultural Research Department ..	Vice-Chairman.
Andaman and Nicobar Islands Administration	Divisional Officer, Public Works Department.
Commerce Department	Nautical Adviser to the Government of India.
	Chief Surveyor with the Government of India.
	Members of the Indian Tariff Board.
	Deputy High Commissioner for India, London.
	Indian Trade Commissioners (except when it is proposed to appoint a non-official)
	Deputy Indian Trade Commissioner, London.
	Secretary, Public Department, Office of the High Commissioner for India, London.

CENTRAL SERVICES, CLASS II.

Deputy Superintendent of Lighthouses, Bombay.

Superintendent and Assistant Superintendent of Launches, Calcutta.

Assistant to the Agent of the Government of India in Ceylon.

Assistant Secretary to the Agent General for India in the Union of South Africa.

Assistant Director and Assistant Professors, All-India Institute of Hygiene and Public Health, Calcutta.

Two Assistant Superintendents, Mathematical Instrument Office, Survey of India.

Two Managers and three Assistant Managers, Photo-Litho Office, Survey of India, Calcutta.

Assistant Manager, Photo Zinco Office, Survey of India, Dehra Dun.

Head Engraver and Assistant Head Engraver, Engraving Office, Survey of India, and two First Division Draftsmen, No. 1, Drawing Office, Survey of India, Calcutta.

Lecturers, Instructors and Demonstrators, Indian School of Mines, Dhanbad.

Overseers in the Government of India Press (including the Forms Press, Aligarh).

Imperial Secretariat Reporters' Service.

Head of the Printing Branch, Legislative Department.

Librarian, Legislative Department.

Assistant, Solicitor's Branch, Legislative Department.

Translator, Legislative Department.

Confidential Assistant in the Office of the Director, Intelligence Bureau.

Private Secretary to the Auditor General in India.

1 Chief Inspector, Control, Security Printing, India;

1 Chief Inspector, Control, Currency Note Press;

1 Engraver; 9 Technical Supervisors.

Customs Appraisers' Service.

Income-tax Service, Class II.

Coorg.

Assistant Commissioner and District Magistrate, Coorg.

Subordinate Judge.

Munsif, Virajpet.

Munsif, Mercara.

District Superintendent of Police.

Deputy Director of Land Records and Agriculture.

Andamans and Nicobar Islands Administration.

Assistant Commissioner, Nicobars, and Lady Assistant Surgeon.

Subordinate Services.

All subordinate services, except first appointments to posts in the ministerial establishments of the Government of India Secretariat and Attached Offices, other than posts in those establishments in respect of which the Government of India have directed or may, with the concurrence of the Public Service Commission, direct that appointments may be made without reference to the Commission.

R. M. MAXWELL,

Secretary to the Government of India.

HOME DEPARTMENT.

NOTIFICATION.

PUBLIC.

New Delhi, the 1st April 1937.

No. 2.—In pursuance of Section 305 of the Government of India Act, 1935, His Excellency the Governor General is pleased to appoint the following gentlemen to be Secretaries to the Governor General in addition to their own duties:—

The Hon'ble Mr. R. M. Maxwell, C.S.I., C.I.E., I.C.S.
Mr. J. G. Laithwaite, C.I.E.

J. A. THORNE,
Joint Secy. to the Govt. of India.

OFFICE OF THE SECRETARY TO THE GOVERNOR-GENERAL.

NOTIFICATION.

New Delhi, the 1st April 1937.

No. 3.—In supersession of all previous orders on the subject, His Excellency the Viceroy is pleased to permit the title "Honourable" to be borne during their term of office by the following officers in India:—

(1) The Members of the Governor General's Executive Council.
(2) The President of the Council of State.
(3) The President of the Indian Legislative Assembly.
(4) The Chief Justice and Judges of the Federal Court.
(5) The Chief Justices and Puisne Judges of Chartered High Courts.
(6) The Governors' Ministers in the provinces.
(7) Residents of the 1st Class.
(8) The Presidents of Provincial Legislative Councils.
(9) The Speakers of Provincial Legislative Assemblies.
(10) The Chief Judge and Judges of the Chief Court of Oudh.
(11) Members of the Council of State.

J. G. LAITHWAITE,
Secy. to the Governor General.

DEPARTMENT OF INDUSTRY AND LABOUR.

NOTIFICATIONS.

ELECTRICITY.

New Delhi, the 23rd March 1937.

No. S.-500.—In pursuance of sub-section (2) of section 1 of the Indian Electricity (Amendment) Act, 1937 (X of 1937), the Governor-General in Council is pleased to appoint the 31st March 1937 as the date on which the said Act shall come into force

New Delhi, the 27th March 1937.

No. S-601.—In exercise of the powers conferred by section 37 of the Indian Electricity Act, 1910 (IX of 1910), and in supersession of the Indian Electricity Rules, 1922, the Governor-General in Council is pleased to make the following rules applicable to the whole of British India, to regulate the generation, transmission, supply and use of energy, and generally to carry out the purposes and objects of the said Act—

RULES.

CHAPTER I.

PRELIMINARY.

1. These rules may be called the Indian Electricity Rules, 1937.

2. (1) *Definitions.*—In these rules, unless there is anything repugnant in the subject or context,—

[IX of 1910.]

(*a*) "the Act" means the Indian Electricity Act, 1910;

(*b*) "ampere" means a unit of electric current, and is the electric current which, when passed through a solution of nitrate of silver in water, in accordance with the specification set out in Annexure I, deposits silver at the rate of 0·001118 of a gramme per second;

the aforesaid unit is represented by the current which is passing in and through the coils of wire forming part of the instrument marked "Government of India Ampere Standard Verified" when the suspended coil in its sighted position is exactly balanced by the force exerted by gravity in Calcutta on the iridio-platinum weight forming part of the said instrument;

(*c*) "Annexure" means an Annexure to these rules;

(*d*) "apparatus" means electrical apparatus, and includes all apparatus, machines, and fittings in which conductors are used, or of which they form a part;

(*e*) "bare" means not covered with insulating material;

(*f*) "circuit" means an electrical circuit forming a system or branch of a system;

(*g*) "concentric system" means a system in which a conductor, called the inner conductor, is insulated and in which the circuit is completed through one or more conductors, called the outer conductors, which are insulated from one another and are disposed over the insulation of, and more or less completely round, the inner conductor;

(*h*) "conductor" means an electrical conductor arranged to be electrically connected to a system;

(*i*) "covered with insulating material" means adequately covered with insulating material of such quality and thickness that there is no danger;

(*j*) "cut-out" means any appliance for automatically interrupting the transmission of energy through any conductor when the current rises above a predetermined amount;

(*k*) "danger" means danger to health or danger to life or limb from shock, burn, or other injury to persons, or from fire or explosion, attendant upon the generation, transformation, distribution, or use of energy;

(*l*) "dead" means at or about earth potential, and disconnected from any live system:

Provided that apparatus separated from a live conductor by a spark gap shall not be considered dead;

(*m*) "distributing licensee" means a licensee who obtains from another licensee or other source a supply of energy in bulk for distribution;

(*n*) "earthed" or "connected with earth" means connected with the general mass of earth in such manner as to ensure at all times an immediate discharge of energy without danger;

(*o*) "earthing system" means an electrical system in which all the conductors are earthed;

(*p*) "electrician" means a person who is over 21 years of age and is competent for the purposes of the rule in which the term is used and who has been appointed in writing by the lessee, owner, agent or manager of any apparatus for the purpose of supervising it;

(*q*) "Inspector" means an Electric Inspector appointed under section 36;

(*r*) "Inspector of Mines" means an Inspector appointed under the Indian Mines Act, 1923; [IV of 1923.]

(*s*) "live" means electrically charged;

(*t*) "metallic covering" means iron or steel armouring, with or without a lead or other metallic sheath as the conditions of the case may require, or an iron or steel pipe surrounding one or more conductors;

(*u*) "neutral conductor" means that conductor of a multi-wire system, the pressure of which is normally intermediate between the pressures of the other conductors of the system;

(*v*) "non-licensee" means a person generating, supplying, transmitting or using energy to whom any of the provisions of Part III of the Act apply;

(*w*) "ohm" means a unit of electric resistance, and is the resistance offered to an electric current by a column of mercury at the temperature of melting ice 14·4521 grammes in mass of an uniform cross-sectional area and of a length of 106·3 centimetres;

the aforesaid unit is represented by the resistance between the terminals of the instrument marked "Government of India Ohm Standard Verified" to the passage of an electric current when the coil of wire forming part of the aforesaid instrument and connected to the aforesaid terminals is in all parts at a temperature of 30°C.;

(*x*) "open sparking" means sparking which owing to the lack of adequate provisions for preventing the ignition of inflammable gas external to the apparatus would ignite such inflammable gas;

(*y*) "owner", "agent" or "manager" of a mine have the same meanings as are assigned to them in sections 3 (*g*), 3 (*a*) and 15(*l*), respectively, of the Indian Mines Act, 1923; [IV of 1923.]

(*z*) "pressure" means the difference of electric potential measured in volts between any two conductors, or between any part of either conductor and the earth as measured by a suitable voltmeter, and is said to be—

(*i*) "low" where the normal pressure is not greater than 250 volts and the pressure in no circumstances exceeds 263 volts;

(*ii*) "medium" where the normal pressure is greater than 250 volts but is not greater than 650 volts, and the pressure in no circumstances exceeds 683 volts;

(*iii*) "high" where the normal pressure exceeds 650 volts or the pressure at any time exceeds 683 volts;

(*aa*) "section" means a section of the Act;

(*bb*) "switchgear" means switches, cut-outs or fuses, conductors, and other apparatus in connection therewith, used for the purpose of controlling the current or pressure in any system or part of a system;

(*cc*) "system" means an electrical system in which all the conductors and apparatus are electrically connected to a common source of pressure;

(*dd*) "volt" means a unit of electro-motive force, and is the electric pressure which, when steadily applied to a conductor whose resistance is one ohm, will produce a current of one ampere; and

(*ee*) "watt" means a unit of power, and is the energy expended per second by an electric current of one ampere under an electric pressure of one volt.

Explanation.—With alternating current, the product of the instantaneous value of the amperes and the instantaneous value of the volts gives the instantaneous value of the power in watts, and the mean value, over a whole period, is the power in watts.

(2) In these rules other words and expressions have the same meaning as are assigned to them in the Act.

3. *Authorisation.*—(1) A licensee, a non-licensee or a consumer, or the owner, agent or manager of a mine, or the agent of any company operating in an oil-field or the owner of a drilled well in an oil-field or a contractor for the time being under contract with a licensee, a non-licensee or a consumer to carry out duties incidental to the generation, transformation, distribution or use of energy may authorise any person for the purpose of any or all of the following rules, namely, rules 43, 60, 64 (1), 96 (2), 106 (1), 108 (4) and 109.

(2) No person shall be authorised under sub-rule (1) unless he is competent to perform the duties specified in the rules for the purpose of which he is authorised.

(3) No person shall be deemed to be authorised under sub-rule (1) unless his name has been entered in a list maintained at the office or premises of the person authorising him, and giving the purposes for which such person is authorised, and the entry has been attested by the person authorising him.

(4) Every list maintained under sub-rule (3) shall be produced before an Inspector when required.

CHAPTER II.

INSPECTORS.

4. *Qualifications of Inspector.*—No person shall be appointed to be an Inspector unless,—

(*a*) he has had at least five years' practical experience in an electrical or mechanical engineering workshop or electric power station; and

(*b*) after acquiring such experience, he has been regularly engaged for a period of at least five years in the practice of electrical engineering:

Provided that the Governor-General in Council or the provincial Government, as the case may be, may appoint any person not so qualified, if in his or its opinion such person is otherwise fully qualified to exercise the powers and perform the functions of an Inspector.

5. *Entry and Inspection.*—(1) Any Inspector or any officer appointed to assist an Inspector may enter, inspect and examine any place, carriage or vessel in which he has reason to believe that there is any appliance or apparatus used in the generation, transmission, supply or use of energy and may carry out tests therein.

(2) Every licensee, non-licensee, consumer and occupier shall afford at all times all reasonable facilities to any such Inspector or officer to make such examinations and tests as may be necessary to satisfy himself as to the due observance of the Act, the licence (if any) and these rules.

(3) Every licensee and every non-licensee supplying energy with the previous sanction of the provincial Government under section 28 shall, if required so to do by an Inspector, provide means for carrying out all tests prescribed by or under the Act of the appliances or apparatus used for the supply of energy by him.

(4) An Inspector may serve an order in the form set out in Annexure VIII, upon any licensee, non-licensee, consumer or occupier, calling upon him to comply with any specified rule, and the person so served shall thereupon comply with the order within the period named therein, and shall report in writing to the Inspector when the order is complied with:

Provided that, if within that period an appeal is filed against the order, the appellate authority may suspend its operation pending the decision of the appeal.

6. *Limitation of appeals.*—No appeal from any decision of an Inspector shall be entertained unless it is preferred within three months of the date of the communication to the appellant of the decision.

7. *Amount of fees.*—(1) The fees set out in Annexure II shall be payable in respect of the services therein mentioned, where the tests are carried out by comparison with the Government of India Standards referred to in rule 2(1).

(2) The Governor General in Council or the provincial Government, as the case may be, may levy such fees for testing and inspection and generally for the services of Inspectors as he or it may, from time to time, by general or special order, direct; and may, if he or it thinks fit, remit any fee or any portion thereof.

8. *Incidence of fees.*—Where an Inspector is called in to decide any difference or dispute, and where a fee for such service is recoverable, the Inspector shall decide by whom such fee shall be payable.

9. *Submission of records.*—An Inspector may require a licensee and a licensee may require an Inspector to submit to such Inspector or licensee for examination any records of tests made in connection with the licensee's works by the licensee or the Inspector; and the licensee or Inspector shall comply with such requisition.

10. *List of consumers.*—An Inspector may require a licensee or non-licensee to submit to him a list of all persons supplied with energy by him at a pressure exceeding low pressure and of the addresses at which such energy is supplied; and, the licensee or non-licensee shall comply with such requisition.

CHAPTER III.

LICENCES.

11. *Applications for licences.*—(1) Every application for a licence shall be signed by, or on behalf of, the applicant and addressed to such officer as the provincial Government may designate in this behalf, and it shall be accompanied by—

(*a*) six copies, in print, of the draft licence as proposed by the applicant, with the name and address of the applicant and of his agent (if any) printed on the outside of the draft;

(*b*) three copies, signed by the applicant, of a map of the proposed area of supply which shall be so marked or coloured as to define any portion of such area which is under the administration of any local authority and shall be on a scale—

(*i*) of not less than six inches to a mile, or

(*ii*) if no such map is available, of not less than that of the largest scale ordnance map available, or

(*iii*) such as may be approved by the provincial Government;

(*c*) a list of any local authorities invested with the administration of any portion of the area of supply;

(*d*) an approximate statement describing any lands which the applicant proposes to acquire for the purpose of the licence under the provisions of the Land Acquisition Act, 1894; [I of 1894]

(*e*) an approximate statement of the capital proposed to be expended in connection with the undertaking;

(*f*) if the applicant is a company which is registered under any of the enactments relating to companies for the time being in force in British India, or in any other part of His Majesty's Dominions, or is incorporated by an Act of Parliament or of the Governor General in Council or by Royal Charter or Letters Patent, a copy of the Memorandum and Articles of Association; and

(*g*) a treasury receipt for a fee of five hundred rupees paid into a Government treasury in the province concerned, unless such fee is remitted, wholly or in part, by general or special order of the provincial Government.

(2) If the application for a licence is rejected or if a licence is revoked under sub-section (3) of section 4 as to the whole or any part of the area of supply, the provincial Government may at its discretion refund, wholly or in part, the fee referred to in clause (*g*) of sub-rule (1).

12. *Copies of map and draft licence for public Inspection.*—The applicant shall deposit at his own office and at that of his agents (if any) and at the office of every local authority invested with the administration of any portion of the proposed area of supply—

(*a*) a copy of the map referred to in clause (*b*) of sub-rule (1) of rule 11 for public inspection; and

(*b*) a sufficient number of copies of the draft licence to be furnished to all persons applying for them at a price not exceeding one rupee per copy.

13. *Contents of draft licence.*—The draft licence shall contain the following particulars, namely:—

(*a*) a short title descriptive of the proposed undertaking, together with the address and description of the applicant, or, in the case of a firm, the names of all the individual members of the firm;

(*b*) a statement of the boundaries of the proposed area of supply;

(*c*) if the generating station is situated, or is to be situated, outside the area of supply or if any intervening area, not included in the area of supply, is to be crossed a list of the streets not included in the area of supply along or across which electric supply-lines are to be laid down or placed;

(*d*) the proposed conditions of supply, including the maximum prices, the nature and amount of the supply (if limited) and the like;

(*e*) a list of the streets (if any) which are repairable neither by Government nor by a local authority and of the railways and tramways (if any) the soil or pavement of which the applicant seeks powers to open or break up, and the names of the persons by which such streets are repairable, or who are for the time being entitled to work such railway or tramway;

(*f*) the proposed periods after which the right to purchase is to take effect;

(*g*) a statement of any special terms of purchase or orders proposed to be made under section 10; and

(*h*) any proposed modification of the Schedule to the Act to be made under clause (*f*) of sub-section (*2*) of section 3.

14. *Form of draft licence.*—The form of draft licence contained in Annexure III may, with such variation as the circumstances of each case require, be used for the purposes of rule 11, and, if used, shall be sufficient.

15. *Advertisement of application and contents thereof.*—(1) The applicant shall, within fourteen days from the submission of the application under rule 11, publish notice of his application by public advertisement, and such advertisement shall consist of—

(*a*) the draft licence,

(*b*) the addresses of the offices at which, under rule 12, copies of the map therein referred to may be inspected and copies of the draft licence obtained.

(2) The advertisement shall be headed by a short title corresponding with that at the head of the draft licence, and shall state that every local authority, company or person, desirous of making any representation with reference to the application to the provincial Government, may do so by letter addressed to such officer as the provincial Government may designate in this behalf, within three months of the date of issue of the newspaper containing the first advertisement.

(3) The advertisement shall be inserted by the applicant in at least three successive issues of such newspaper as the provincial Government, having regard to its circulation among persons likely to be interested, may direct, and, in the absence of any such direction, in at least three successive issues of any newspaper published within the proposed area of supply, or if there is no such newspaper, of any newspaper published within the province.

(4) The applicant shall send a copy of each of the three successive issues of the newspaper containing the advertisement to such officer as the provincial Government may designate in this behalf as soon as the third issue has appeared, and the provincial Government shall publish the advertisement at least once in the local official Gazette within six weeks from the date of the first advertisement published under sub-rule (3):

Provided that any failure or delay on the part of the provincial Government in publishing the advertisement shall not, of itself, preclude the grant of a licence.

16. *Amendment of draft licence.*—Any person who desires to have any amendment made in the draft licence shall deliver a statement of the amendment to the applicant and to such officer as the provincial Government may designate in this behalf within the time allowed under sub-rule (2) of rule 15 for the submission of representations referring to the application.

17. *Local inquiries.*—If any person locally interested objects to the grant of a licence applied for under the Act, the provincial Government shall, if either the applicant or the objector so desires, cause a local inquiry to be held, of which due notice shall be given to both applicant and objector:

Provided that the provincial Government may refuse such an inquiry if in its opinion the objection is of a trifling or vexatious nature.

18. *Approval of draft licence.*—When the provincial Government has approved a draft licence, either in its original form or in a modified form, such officer as the provincial Government may designate in this behalf shall inform the applicant of such approval and of the form in which it is proposed to grant the licence.

19. *Notification of grant of licence.*—On receiving an intimation in writing from the applicant that he is willing to accept a licence in the form approved by the provincial Government, the provincial Government shall publish the licence by notification in the local official Gazette, together with a statement that it has been granted.

20. *Date of commencement of licence.*—The date of a notification under rule 19 shall be deemed to be the date of commencement of a licence.

21. *Deposit of map.*—When a licence has been granted, a map showing, as regards such licence, the particulars specified in clause (*b*) of sub-rule (1) of rule 11 shall be signed, and dated to correspond with the date of the notification of the grant of the licence, by such officer as the provincial Government may designate in this behalf and retained by him as the deposited map.

22. *Deposit of printed copies.*—When a licence has been granted, the licensee shall, within thirty days, deposit printed copies of the licence together with copies of the map for public inspection at his own office and at that of his agents (if any) and at the office of every local authority within the area of supply and shall furnish printed copies of the licence to all persons applying for them at a price not exceeding one rupee per copy.

23. *Application for written consent of Provincial Government in certain cases.*—If a licensee desires the written consent of the provincial Government under sub-section (*5*) of section 12 to enable him to open or break up the soil or pavement of any street which is repairable neither by Government nor by a local authority, or any railway or tramway, he shall apply for such consent in writing to such officer as the provincial Government may designate in this behalf, and shall describe accurately the street, railway, or tramway which he seeks power to open or break up and the names of the persons by whom such street is repairable, or who are for the time being entitled to work such railway or tramway, and the extent to which he proposes to open or break up the same.

24. *Amendment of licences.*—(1) No alterations or amendments in the terms and conditions of any licence shall be made under clause (*b*) of sub-section (*3*) of section 4, until they have been published by the applicant and by the provincial Government; and the provisions of sub-rules (2), (3) and (4) of rule 15 shall apply to such publication

(2) If any such alteration or amendment as is referred to in sub-rule (1) is made, it shall be notified by the provincial Government in the local official Gazette.

CHAPTER IV.

CONDITIONS OF SUPPLY BY LICENSEE.

25. *Precautions against leakage before connection.*—(1) A licensee shall not connect with his works the apparatus on the premises of any applicant for a supply unless he is reasonably satisfied that the connection will not at the time of making the connection cause a leakage from that apparatus exceeding one five-thousandth part of the maximum supply demanded on the applicant's premises.

(2) If a licensee declines to make a connection in accordance with sub-rule (1), he shall serve upon the applicant a notice stating his reason for so declining.

26. *Leakage on consumer's premises.*—(1) If a licensee has reason to believe that there is in the system of a consumer leakage which is likely to affect injuriously the use of energy by the licensee or by other persons or which is likely to cause danger, he may give the consumer reasonable notice in writing that he desires to inspect and test the apparatus.

(2) If on such notice being given—

(*a*) the consumer does not give all reasonable facilities for inspection and testing, or

(*b*) a leakage from the consumer's system exceeding one five-thousandth part of the maximum supply required by the consumer is shown to exist,

the licensee may forthwith discontinue to supply energy to the system in question, giving immediate notice of the discontinuance to the consumer, and need not recommence the supply until he is satisfied that the cause of the leakage has been removed.

27. *Appeal to Inspector in regard to leakage.*—(1) If an applicant for a supply or a consumer is dissatisfied with the action of a licensee under rule 25 or rule 26 in declining to make a connection or in discontinuing, or in not recommencing the supply of energy to his system he may appeal to an Inspector, and the Inspector or under his orders any other officer appointed to assist the Inspector shall, on such application and on payment of the fee fixed under sub-rule (2) of rule 7, test the apparatus for the existence of leakage.

(2) The test shall be carried out within forty-eight hours of the receipt of the application for it or of the payment of the fee under sub-rule (1), whichever is later.

(3) If the Inspector or other officer, as aforesaid, on testing finds that the leakage from the appellant's system is less than one five-thousandth part of the maximum supply required by the appellant, the Inspector shall notify the licensee, and the licensee shall, within twenty-four hours, commence or continue the supply of energy, and the licensee shall pay to the appellant an amount equal to the fee paid by the appellant to the Inspector under sub-rule (1), if the Inspector so directs.

(4) This rule shall be endorsed on every notice given under the provisions of rule 25 or rule 26.

28. *Declared pressure of supply to consumers.*—Before commencing to supply energy to a consumer, a licensee shall declare to the consumer the pressure at which he undertakes to supply energy and he shall not, without the written consent of the consumer or the previous sanction of the provincial Government, permit the pressure to vary therefrom by more than 5 per cent. in the case of low or medium pressure, or by more than 12½ per cent. in the case of high pressure:

Provided that, for the purposes of testing or for any other purposes connected with the efficient working of the undertaking, the supply of energy may be discontinued by the licensee for such period as may be necessary subject (except in cases of emergency) to not less than twenty-four hours' notice being given by the licensee to all consumers likely to be affected by such discontinuance; and in the event of any such consumer objecting, the supply of energy shall not be discontinued (except in cases of emergency) without the consent of the provincial Government and subject to such conditions as it may impose.

29. *Declared frequency of suply to consumers.*—From the time of commencing the supply of energy to a consumer by means of an alternating current a licensee shall declare to the consumer the frequency at which he undertakes to supply energy and the licensee shall not, without the written consent of the consumer or the previous sanction of the provincial Government, permit the frequency to vary therefrom by more than 4 per cent.

30. *Examinations of licensee's records by consumer.*—A consumer may, after giving not less than twenty-four hours' notice to the licensee, enter any testing station established by the licensee, in accordance with clause XIII of the Schedule to the Act, and may examine the records of the tests made therein; and he may also take copies of or extracts from such records on payment to the licensee of a sum of one rupee for every such examination of a record covering a period of twenty-four hours or any part of twenty-four hours.

31. *Sealing of meters.*—(1) A licensee may affix one or more seals to any meter, maximum demand indicator, or other apparatus placed upon a consumer's premises in accordance with section 26, and to any cut-out placed upon a consumer's premises in accordance with rule 40 and no person other than the licensee shall break any such seal.

(2) The consumer shall use all reasonable means in his power to ensure that no such seal is broken otherwise than by the licensee.

32. *Limits of errors in the meters.*—The limits of error permissible in a meter placed upon a consumer's premises in accordance with section 26 are for the purposes of that section the following, namely:—

(*a*) where the meter is of a type included in the "British Standard Specification for Electricity Meters; No. 37" dated 1930, the limits of error laid down in that Specification;

(*b*) where the meter is of any other type, it shall not register more than 3 per cent. above or below absolute accuracy at all loads in excess of one-fifth of full load and up to full load;

(*c*) no meter shall register at no load.

33. *Conditions for maximum demand indicators.*—The conditions with which a maximum demand indicator or other apparatus placed upon a consumer's premises in accordance with section 26, shall comply are for the purposes of that section the following, namely:—

(*a*) it shall not register more than 3 per cent. above or below absolute accuracy at all loads in excess of one-fifth of full load and up to full load;

(*b*) it shall not register at no load.

34. *Sale of plans.*—Copies of plans or sections such as are referred to in clause XVI of the Schedule to the Act shall be supplied by the licensee to every applicant at a price not exceeding one rupee per square foot.

35. *Point of commencement of supply.*—The point at which the supply of energy by a licensee to a consumer shall be deemed to commence shall—

(*a*) where the amount of energy supplied to a consumer or the electrical quantity contained in the supply is ascertained by meter, be, in respect of a conductor from the service-line which passes through the meter, the point at which such conductor enters the meter, and, in respect of a conductor from the service-line which does not pass through the meter, the point on such conductor nearest to the meter;

(*b*) where the amount of energy supplied to a consumer or the electrical quantity contained in the supply is not ascertained by meter, be the point at which the cut-out is inserted in the service-line by the licensee in accordance with rule 40.

36. *Preparation and submission of accounts.*—(1) Every licensee, unless exempted in accordance with section 11, shall cause the accounts of his undertaking to be made up to the thirty-first day of December or the thirty-first day of March, at the option of such licensee, or to such other date as the provincial Government may approve.

(2) Such licensee shall prepare and render an annual statement of his accounts in accordance with the provisions of section 11 within a period of six months from such date as aforesaid, or such extended period as the provincial Government may authorise after it is satisfied that the time allowed is insufficient owing to any cause not within the control of the licensee; and the statement shall be rendered in duplicate if the provincial Government so desires.

(3) The accounts shall be made up as far as circumstances permit in one or other of the prescribed forms set out in Annexures IV and V according as the licensee is or is not a local authority and may, at the option of the licensee, be rendered either in British Indian or in British sterling currency:

Provided that the provincial Government may, by special or general order, direct that the accounts of any undertaking shall be made up in any form it may direct in such order.

37. *Forms of certain requisitions.*—Requisitions under sub-clause (*4*) of clause V or sub-clause (*5*) of clause VI, as the case may be, of the Schedule to the Act shall be made in the form set out in Annexure VI or Annexure VII.

CHAPTER V.

GENERAL PRECAUTIONS FOR THE SAFETY OF THE PUBLIC.

38. *Responsibility of licensees for their works on consumers' premises.*—Licensees shall ensure that all electric supply-lines and apparatus belonging to them, or under their control, which are on a consumer's premises, are maintained in a safe condition electrically and mechanically and shall take due precautions to avoid danger arising on such premises from such supply-lines or apparatus.

39. *Service-lines on consumers' premises.*—Service-lines placed by a licensee on the premises of a consumer which are underground or which are accessible without the aid of a ladder or other special appliance shall be so insulated and protected by the licensee as to be secure under all ordinary conditions against electrical, mechanical, chemical, or other injury to the insulation, and against access of moisture.

40. *Cut-out on consumers' premises.*—A licensee shall provide a suitable cut-out in each conductor of every service-line (other than an earthed neutral conductor or the earthed external conductor of a concentric cable) within a consumer's premises, in an accessible position as close as possible to the point of entry. Such cut-out shall be contained within an adequately enclosed fire-proof receptacle:

Provided that, where more than one consumer is supplied through a common service-line, each such consumer who so requires shall be provided with an independent cut-out at the point of junction to the common service.

41. *Accessibility of bare conductors.*—Where bare conductors are used in a building the owners of such conductors shall ensure that they are inaccessible without the aid of a ladder or other special appliance and shall provide switches for rendering them dead whenever necessary.

42. *Handling of apparatus.*—Before any conductor or apparatus is handled, adequate precautions shall be taken, by earthing or other suitable means, to discharge electrically such conductor or apparatus, and any adjacent conductor or apparatus if there is danger therefrom, and to prevent any conductor or apparatus from being accidentally or inadvertently electrically charged when persons are working thereon:

Provided that this sub-rule shall not apply to the cleaning of commutators and slip-rings working at low or medium pressures.

43. *Repairs to apparatus.*—No repair of any part of any apparatus shall be effected while the part is live, except by an authorised person.

44. *Supply to vehicles, etc.*—Every person owning a vehicle, travelling crane or the like to which energy is supplied shall ensure that it is efficiently controlled by a suitable switch enabling all pressure to be cut off, and, where such vehicles, travelling cranes or the like run on metal rails, the owner shall ensure that the rails are electrically continuous and earthed.

45. *Cables for portable motors.*—(1) Trailing cables shall not be used for portable motors and apparatus connected therewith unless they are specially flexible, heavily insulated and protected from mechanical injury.

(2) Where the protection is by means of metallic covering, the covering shall be in metallic connection with the frame of the motor and earth.

46. *Instructions for restoration of persons suffering from electric shock.*—(1) Instructions, both in English and in the vernacular of the district, for the restoration of persons suffering from electric shock, shall be affixed by the owner in a conspicuous place in every generating station and sub-station, and in every factory as defined in clause (*j*) of section 2 of the Factories Act, 1934, in which electricity is used, and in such other premises where electricity is used as the Inspector may, by notice served on the owner, direct. [XXV of 1934.]

(2) Copies of the instructions shall be supplied on demand by every Inspector at a price to be fixed by the provincial Government.

47. *Instruction in artificial respiration.*—The owner of every generating station and sub-station and of every factory to which rule 46 applies shall ensure that all authorised persons employed by him are acquainted with and able to apply the instructions referred to in rule 46.

48. *Precautions to be adopted by consumers and owners, electrical contractors and electrical workmen.*—(1) No electrical installation work, including additions, alterations, repairs, and adjustments to existing installations, except such replacement of lamps, fans, fuses, switches and other component parts of the installation as in no way alters its capacity or character shall be carried out upon the premises or on behalf of any consumer or owner for the purposes of the supply

of energy to such consumer or owner, except by an electrical contractor licensed by the provincial Government in this behalf and under the direct supervision of a person holding a certificate of competency issued by the provincial Government:

Provided that, the provincial Government may by notification in the local official Gazette exempt such conditions as it may impose any such description of work either generally or in the case of any specified class of consumers or owners from so much of this sub-rule as requires such work to be carried out by an electrical contractor licensed by the provincial Government in this behalf:

Provided further that this rule shall not apply to any work carried out by or on behalf of the Government of India unless the Government of India so direct.

(2) This rule shall come into force in any province or part thereof on such date as the provincial Government may by notification in the local official Gazette appoint.

CHAPTER VI.

ELECTRIC SUPPLY-LINES AND APPARATUS.

49. *Construction, insulation and earthing of apparatus.*—(1) All apparatus shall be sufficient in power and size and of sufficient mechanical strength for the work it may be required to do, and, so far as is practicable, shall be so constructed, installed, protected, worked and maintained as to prevent danger.

(2) All insulating material shall be chosen with special regard to the circumstances of its proposed use. It shall be of mechanical strength sufficient for its purpose, and, so far as is practicable, shall be of such a character or so protected as fully to maintain its insulating properties under working conditions of temperature and moisture.

(3) No live parts shall be so exposed as to be capable of being touched by persons not intended to have access to them.

(4) Every part of a system shall be kept efficiently insulated from earth, except that:—

(*i*) the neutral point of a polyphase system may be earthed at one point only:

(*ii*) the mid-voltage point of any system, other than a concentric system, may be earthed at one point only.

50. *Accidental charge.*—The owners of all circuits and apparatus shall so arrange them that there shall be no danger of any part thereof becoming accidentally charged to any pressure beyond the limits of pressure for which it is intended.

51. *Switches to be on the live wire.*—(1) In any case where the conductors brought by the licensee to the point of commencement of supply include an earthed neutral conductor, the supply of energy shall

not be commenced, or continued, until or unless the following provisions have been or are complied with, namely:—

(a) An indication of a permanent nature shall be provided by the licensee at or near the point of commencement of supply to enable such neutral conductor to be distinguished from any live conductor at that point, and no single-pole switch shall be inserted by the licensee in such conductor or any branch thereof except as hereinafter provided by this rule;

(b) If so required by the licensee the consumer shall provide a similar indication to distinguish that conductor, forming part of his system, which is to be connected to the earthed neutral conductor at the point of commencement of supply.

(2) In no case referred to in sub-rule (1) shall the consumer insert any single-pole switch or cut-out or permit such switch or cut-out to be or to remain inserted in any conductor referred to in sub-rule (1) (b).

(3) Notwithstanding the provisions of sub-rule (1) (a) of this rule, certain apparatus may be connected in an earthed neutral conductor as follows:—

(a) A link may be inserted for testing purposes, or a switch for use in controlling a generator or transformer;

(b) A switch or link may be inserted in the connection between the neutral conductor and earth at a generating station or substation for use in testing and emergencies only:

Provided that, in the case of consumers' systems connected to the licensee's main prior to the 1st July 1937 no penalty shall attach to any breach of this rule occurring before the 1st July 1938.

52. *Crossing metallic substances.*—(1) Where an electric supply-line crosses, or is in proximity to, any metallic substance, the owner of the supply-line shall take such precautions as an Inspector may approve against the possibility of the metallic substance becoming charged.

(2) Where such metallic substance is introduced after the electric supply-line has been laid or erected, the cost incurred in taking such precautions shall be refunded to the owner of the electric supply-line by the owner of the metallic substance.

53. *Cut-out.*—The owner of every electric supply-line (other than the earthed neutral conductor of any system or the earthed external conductor of a concentric cable) shall protect it by a suitable cut-out.

54. *Metal casings.*—All metal casings or metallic coverings containing or protecting any electric supply-line or apparatus shall be connected with earth by the owner, and shall be so joined and connected across all junction-boxes and other openings as to make good mechanical and electrical connection throughout their whole length:

Provided that this rule shall not apply to isolated wall tubes or to brackets, electroliers, standards, switch or fan regulator covers or other fittings (other than portable hand-lamps in factories) where the supply is at low pressure.

55. *Junction-boxes.*—The owners of all street junction-boxes or pillars containing circuits or apparatus shall secure their covers and doors in such a manner that they can be opened only by means of a special appliance.

56. *Distinction of circuits of different pressure.*—The owner of every generating station, sub-station, junction-box or pillar in which there are any circuits or apparatus, intended for operation at different pressures, shall ensure that the respective circuits are readily distinguishable from one another.

57. *Connection with earth of frames of generators, etc.*—The frame of every generator, stationary motor, and, so far as is practicable, portable motor, and the metallic parts (not intended as conductors) of all transformers and regulating or controlling apparatus connected with the supply, shall be earthed by the owner by two separate and distinct connections with earth.

58. *Connection with earth of a multi-wire system.*—In every distributing system in which there is a neutral conductor, where the pressure between the neutral conductor and an outer or phase conductor exceeds 125 volts, the neutral conductor shall be connected with earth by two separate and distinct connections from the neutral bus-bar and in accordance with the following provisions, namely:—

(*a*) the connection shall be made at one point only on each distinct system, namely, at the generating station or sub-station, or both, as the case may be, and the insulation of the system shall be maintained at all other parts;

(*b*) the connection shall not be made by the aid of, nor shall it be in contact with any water-main, gas-main or similar main not belonging to the licensee or non-licensee, as the case may be, except with the consent of the owner thereof and of the Inspector; a resistance, not exceeding 20 ohms, may be inserted between the neutral bus-bar and earth, and, if so inserted, it shall be of sufficient cross-sectional area to carry the current which would pass should an outer or phase conductor become accidentally connected with earth;

(*c*) the connection shall not be removed except for the purpose of testing, in which case it shall be made good again as soon as such test is finished, and a record of any such disconnection shall be kept by the licensee or non-licensee, as the case may be;

(*d*) the connection shall not be removed in a licensee's system except between 1 A.M. and 3 A.M., and, in a non-licensee's system, while the generator is in operation or energy is being used;

(*e*) the current from the neutral conductor to earth shall, in the case of a licensee's direct current distributing system, be continuously recorded, and, if at any time it exceeds one-thousandth part of the maximum supply current, steps shall immediately be taken to improve the insulation of the system.

59. *Connection with earth of concentric conductors.*—(1) Notwithstanding anything contained in sub-rule (4) of rule 49, when concentric conductors are used, the owner shall maintain the insulation throughout, except that the external conductor may be connected with earth at one point:

Provided that where a person generates electricity exclusively for use on his own premises, he may use a bare external conductor if it is connected with earth and if no switch, cut-out or circuit breaker is inserted in that conductor or in any conductor connected thereto.

Exception.—Switches, cut-outs or circuit breakers may be used to break the connection with the generators or transformers supplying energy:

Provided that in no case shall the connection of a bare external conductor with earth be thereby broken.

CHAPTER VII.

SUPPLY AT MEDIUM OR HIGH PRESSURE.

60. *General precautions applicable to supply at medium or high pressure.*—Where a licensee proposes to supply or use energy at medium or high pressure, he shall give notice to an Inspector and shall not commence or continue the supply unless and until he has complied with the following provisions, namely:—

(*a*) all live parts of apparatus shall, unless accessible only to, and under the control of, an authorised person, be protected by mechanically strong metal casings or metallic coverings securely fastened throughout;

(*b*) suitable linked switches, of requisite capacity to carry and break the current, shall be inserted in each conductor, near the point of origin on the consumer's premises;

(*c*) every conductor, unless accessible only to an authorised person, shall be, as far as is practicable, completely enclosed in a mechanically strong metal casing or metallic covering, securely fastened throughout or fixed in such other manner as may be approved in writing by an Inspector;

(*d*) the supply to every apparatus shall be efficiently controlled by suitable linked switches, of requisite capacity to carry and break the current in each conductor, placed near the apparatus in such a position as to be readily handled by the operator, so that by their means all pressure can be cut off from the apparatus concerned and from any device in connection therewith;

(*e*) the word "CAUTION" both in English and in the vernacular shall be affixed permanently in a conspicuous position, where possible, on every generator and every motor and every controlling or regulating apparatus in connection with such generator or motor:

Provided that, where it is not possible to affix them on the generator, motor, or apparatus, they shall be fixed as near as possible:

Provided also that, where the generator, motor, controlling or regulating apparatus, is within an enclosure accessible only to an authorised person, one notice affixed to the enclosure shall be sufficient for the purposes of this sub-rule.

61. *Main switchboard.*—The owner of every main switchboard connected with a supply of energy at medium or high pressure shall comply with the following provisions, namely:—

(*a*) a clear space of not less than 3 feet in width shall be provided in front of the switchboard;

(*b*) if there are any attachments or bare connections at the back of the switchboard, the space (if any) behind the switchboard shall be either less than 9 inches, or more than 30 inches in width, measured from the furthest outstanding part of any attachment or conductor;

(*c*) if the space behind the switchboard exceeds 30 inches in width, there shall be a passage-way clear to a height of not less than 6 feet, save as regards any horizontal supports of the switchboard, which may be placed at a height of not less than 4 feet 6 inches.

62. *Approval of high pressure supply.*—(1) No licensee or non-licensee shall deliver a high pressure supply to any person, other than a distributing licensee, except with the approval in writing of an Inspector, and subject to such conditions (if any) as such Inspector may think reasonable and proper in the circumstances, and the owner shall not bring the installation into use until it has been inspected by an Inspector or other officer appointed to assist an Inspector.

(2) Where energy is to be used by an owner at high pressure, the owner shall not bring the installation into use except with the approval in writing of an Inspector and subject to such conditions (if any) as he may think fit.

(3) When the position of a high pressure motor or other apparatus is changed, notice shall forthwith be given to the Inspector showing the extent and nature of the change of position.

(4) The owner of any high pressure installation who makes any such alterations in or additions to the installation as affect the supply shall not utilize the alterations or additions for the purposes of supply unless and until they have been approved by an Inspector.

63. *Testing of insulation of high pressure circuit.*—(1) The owner of a high pressure circuit, other than an aerial line, shall not bring it into use unless the insulation of electric supply-line, machine, device or apparatus pertaining thereto has withstood the continuous application, during one minute, of the testing pressure given in sub-rule (2); and the owner shall duly record the results of each test and shall forward them to an Inspector.

(2) For the purposes of sub-rule (1)—

(*a*) if the normal working pressure does not exceed 1,000 volts the testing pressure shall be 2,000 volts,

(*b*) if the normal working pressure exceeds 1,000 volts but does not exceed 10,000 volts, the testing pressure shall be double the normal working pressure,

(*c*) if the normal working pressure exceeds 10,000 volts the testing pressure shall be the normal working pressure plus 10,000 volts:

Provided that an Inspector may, if he thinks fit, accept the manufacturer's certified tests in place of the tests required by this rule.

64. *High pressure electric supply lines and apparatus placed above ground.*—(1) All owners of high pressure apparatus, including every portion of any high pressure electric supply line (other than an aerial line) placed above the surface of the ground, unless it is in a sub-station, or in a compartment specially arranged for the purpose and accessible only to authorised persons, shall ensure that it is completely enclosed in, or protected by, a mechanically strong metal casing or metallic covering securely fastened throughout:

Provided that this sub-rule shall not apply to neon signs and X-ray apparatus which are operated in accordance with instructions issued by the Inspector.

(2) All owners of circuits and apparatus connected with any high pressure apparatus to which sub-rule (1) is applicable shall ensure that they are marked at frequent intervals with the word "CAUTION", both in English and in the vernacular. All supports of high pressure aerial lines shall be similarly marked at frequent intervals.

CHAPTER VIII.

AERIAL LINES.

65. *Minimum strength of conductors of aerial lines.*—The owner of an aerial line shall not use it for the supply of energy unless each conductor has an actual breaking load of not less than 700 lbs.:

Provided that, where the pressure is low and the span is of less than 50 feet and is on the owner's premises, a conductor having an actual breaking load of not less than 300 lbs. may be used.

66. *Maximum intervals between supports.*—The owner of an aerial line shall ensure that the conductors are attached to supports at intervals, not exceeding the safe limits based on the actual breaking load of the conductor and the factor of safety prescribed in rule 68:

Provided that where such a line is erected in, over, along or across any street, the interval shall not, without the consent in writing of the Inspector, exceed 220 feet.

67. *Connection with earth of metal supports and stay wires.*—(1) The owner of every aerial line supported by metal supports shall ensure that these supports are permanently and efficiently earthed. For this purpose a continuous earth wire securely fastened to each support and connected with earth at four points in every mile, the spacing between the points being as nearly equidistant as possible, shall be provided, or alternatively, each support shall be connected to an effective earthing device.

(2) Each stay-wire shall be similarly earthed unless an insulator has been placed in it at a height of not less than ten feet from the ground.

68. *Factors of safety.*—(1) The owner of every aerial line shall ensure that it has the following factors of safety:—

(*i*) for metal supports, at least 2·5;

(*ii*) for other supports, at least 3·5;

(*iii*) for guard-wires or bearer-wires, at least 3;

(*iv*) for conductors, at least 2;

under all conditions, and that the strength of support in the direction of the line is not less than one-fourth of the strength required in a direction transverse to the line.

(2) For the purpose of calculating the factors of safety:—

(*a*) the maximum wind pressure shall be specified by the provincial Government in each case;

(*b*) for cylindrical bodies the effective area shall be taken as two-thirds of the sectional area exposed to wind pressure;

(*c*) for lattice steel or other compound structures the wind pressure on the lee-side members shall be taken as one-half of the wind pressure on the windward side members, and the factor of safety shall be calculated on the crippling load of struts and upon the elastic limit of tension members;

(*d*) the temperature shall be taken as 32°F. or such other temperature as the provincial Government may specify.

(3) Notwithstanding anything in sub-rules (1) and (2), in localities where aerial lines are liable to accumulations of ice or snow, the provincial Government may, by order in writing, specify such factor of safety as it may think fit and the conditions under which it is to be calculated.

69. *Height from ground and distance from buildings.*—(1) Every conductor of an aerial line (not being a trolley-wire or a traction-feeder on the same support as a trolley-wire) shall be—

(*a*) at least 20 feet above the ground where it is over any part of a street or other public place;

(*b*) inaccessible, either from the ground or from any building or structure, whether permanent or temporary, except by the aid of a ladder or other special appliance.

(2) Where an aerial line is on a consumer's or an owner's premises, the height of every conductor from the ground or from any mineral or refuse dump and from parts of buildings or structures to which persons have access shall, unless the conductors are adequately guarded, be not less than 15 feet or such greater height as may be necessary to prevent danger.

(3) The owner of the aerial line shall be responsible for ensuring that the provisions of sub-rules (1) and (2) are observed.

70. *Erection or alteration of buildings.*—(1) If, at any time subsequent to the erection of an aerial line, any person proposes to erect a new building or structure, whether permanent or temporary, or to make in or upon any building or structure any permanent or temporary

addition or alteration, he shall, if such building, structure, addition or alteration would, during or after construction, result in a contravention of the provisions of sub-rule (1) or sub-rule (2) of rule 69 give notice in writing of his intention to the owner, and to an Inspector, and shall furnish therewith a scale drawing showing the proposed building, structure, addition or alteration and the scaffolding required during its construction:

Provided that the owner may, before so altering the aerial line, require the person from whom the notice was received to deposit the estimated cost of such alteration.

(2) On receipt of such notice the owner shall, without undue delay, so alter the aerial line as to ensure that it will not be accessible in such a manner as to contravene the provisions of sub-rule (1) or sub-rule (2) of rule 69 either during or after construction and shall be entitled to recover, from the person from whom the notice was received, the cost of such alterations which shall be deemed to include the following items namely:—

(*i*) the cost of additional material used on the alteration;

(*ii*) the wages of labour employed in effecting the alteration;

(*iii*) supervision charges to the extent of 15 per cent. of item (*ii*); and

(*iv*) any charges incurred by the owner in complying with the provisions of section 16 in respect of such alterations.

(3) No work upon the building, structure, addition or alteration shall be commenced until the Inspector has certified that neither during nor after construction the provisions of sub-rule (1) or sub-rule (2) of rule 69 will be contravened:

Provided that an Inspector may, if he is satisfied that the aerial line has been so guarded as to secure the protection of persons and property from injury or risk of injury, permit the work to be executed prior to, or, in the case of a temporary addition or alteration, without the alteration of the aerial line.

71. *Conductors at different pressures on same supports.*—Where conductors forming parts of systems at different pressures are erected on the same supports, the owners shall make adequate provision to guard against danger to linesmen and others from the lower pressure system being charged above its normal working pressure by leakage from or contact with the higher pressure system; and the type of construction and the clearances between the conductors of the two systems shall be subject to the prior approval of an Inspector.

72. *Protection from lightning.*—The owner of every aerial line shall adopt efficient means for protecting any portion of the line or any support, guard-wire or bearer-wire of the line which is so exposed as to be liable to injury from lightning.

73. *Safety devices.*—(1) The owner of every aerial line (not being suspended from a dead bearer-wire and not being a trolley-wire) erected over any part of a street or other public place or in any factory or mine or on any consumer's premises shall protect it with a device approved by an Inspector for rendering the line electrically harmless in case it breaks.

(2) An Inspector may by notice in writing require the owner of any such aerial line wherever it may be erected to protect it in the manner specified in sub-rule (1).

74. *Lines crossing or approaching each other.*—(1) Where an aerial line crosses or is in proximity to any telegraph-line the owner of the aerial line shall so protect it as to guard against the possibility of its coming into contact with the telegraph line.

(2) Within twenty-one days of receiving notice that a telegraph-line has been, is being or is about to be erected in proximity to his aerial line the owner of the aerial line shall provide the protection referred to in sub-rule (1).

(3) Where an aerial line crosses or is in proximity to an aerial line belonging to another person, the owner of the line which was last erected shall so protect it as to guard against the possibility of its coming into contact with the other aerial line.

(4) A person erecting or proposing to erect an aerial line which crosses or is in proximity to another aerial line may require the owner of the other aerial line within twenty-one days to provide the protection referred to in sub-rule (3).

(5) In all cases referred to in the preceding sub-rule the expense of making the guarding arrangement shall be borne by the person whose line was last erected.

(6) Where two lines cross, the crossing shall be made as nearly at right angles as the nature of the case admits.

(7) The guarding arrangement shall ordinarily be carried out by the owner of the posts on which it is made, and he shall be responsible for its efficient maintenance.

(8) All work required to be done by or under this rule shall be carried out to the satisfaction of the Inspector.

75. *Lines crossing trolley-wires.*—In the case of a crossing over a trolley-wire the guarding shall fulfil the following conditions, namely :—

(*a*) where there is only one trolley-wire, two guard-wires shall be erected as in the appended diagram A;

(*b*) where there are two trolley-wires and the distance between them does not exceed 15 inches, two guard-wires shall be erected as in the appended diagram B;

(*c*) where there are two trolley-wires and the distance between them exceeds 15 inches but does not exceed 48 inches, three guard-wires shall be erected as in the appended diagram C;

(*d*) where there are two trolley-wires and the distance between them exceeds 48 inches, each trolley-wire shall be separately guarded as in the appended diagram D;

(*e*) the rise of the trolley boom shall be so limited that, if the trolley leaves the trolley-wire, it shall not foul the guard-wires; and

(*f*) where a telegraph-line is liable to fall or be blown down upon an arm, stay-wire or span-wire, and so slide down upon a trolley-wire, guard hooks shall be provided to prevent such sliding.

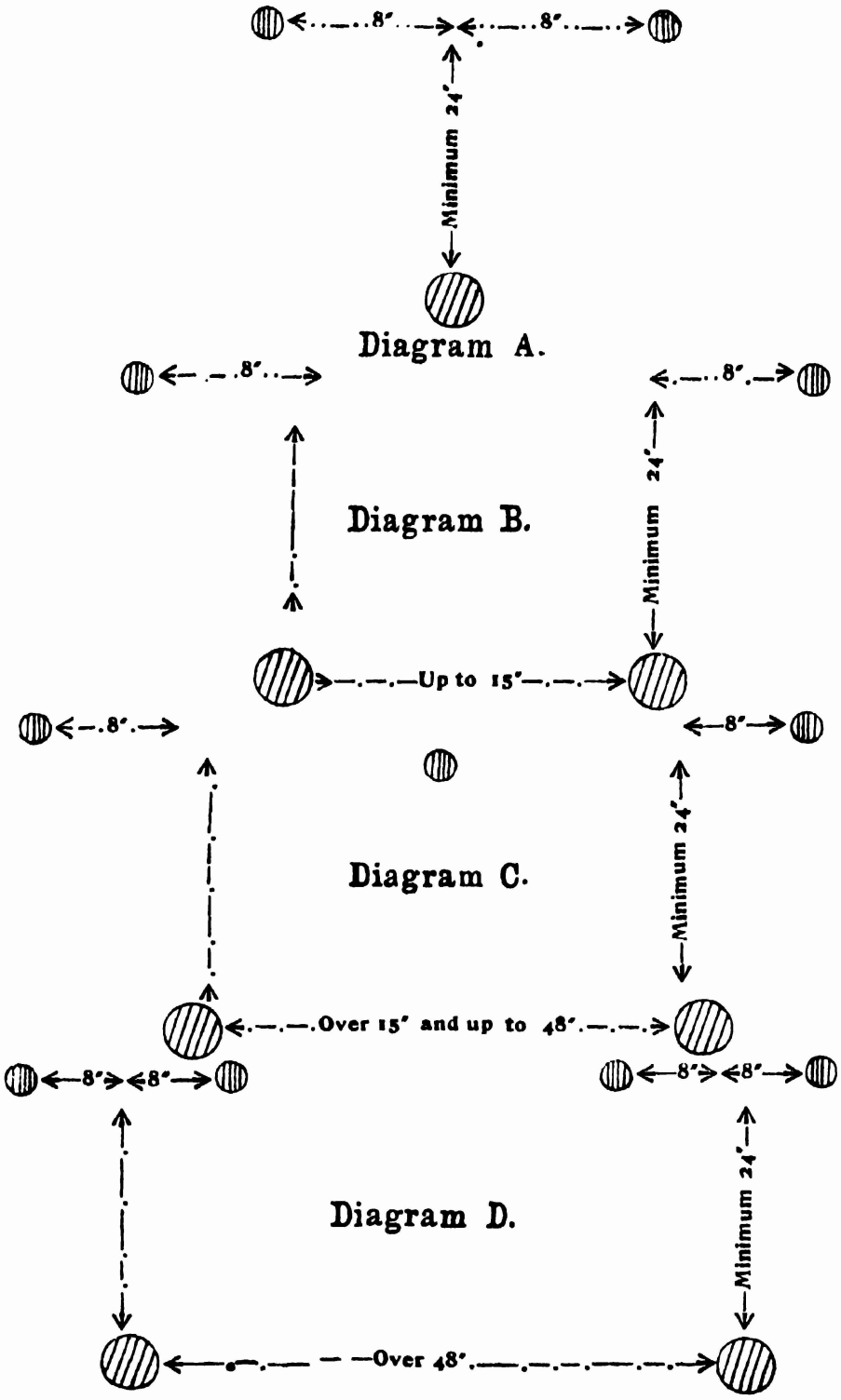
8"
8"
Minimum 24"
Diagram A.
8"
8"
Minimum 24"
Diagram B.
Up to 15"
8"
8"
Minimum 24"
Diagram C.
Over 15" and up to 48"
8"
8"
8"
8"
Minimum 24"
Diagram D.
Over 48"

76. *Guard-wires.*—(1) Every guard-wire shall be connected with the earth, at each point at which its electrical continuity is broken and, in the case of electric traction-lines, shall also be connected, at intervals of not more than five spans, with the rails.

(2) Every guard-wire shall have an actual breaking load of not less than 1,500 lbs., and shall, if made of iron or steel, be galvanised.

(3) Every guard-wire or cross-connected system of guard-wires, shall have sufficient current-carrying capacity to ensure the rendering dead, till the contact has been removed, of any live-wire coming into contact with it, without risk of fusing of the guard-wire or wires.

(4) Every guard-wire or system of guard-wires and its supports shall have sufficient strength to carry without breaking the extra load which may be put on them by the fall of any or all the wires guarded.

77. *Alternative methods of guarding.*—Alternative methods of guarding may be substituted with the approval of an Inspector for those required by rule 75 and rule 76.

78. *Service-lines from aerial lines.*—No service-line or tapping shall be taken off an aerial line except at a point of support.

79. *High pressure aerial lines.*—The owner of high pressure aerial lines shall not make them live until they have been approved by an Inspector, and shall make arrangements to the satisfaction of the Inspector to prevent any person from climbing up any of the supports without the aid of a ladder or special appliance while the lines are in use.

80. *Unused aerial line.*—(1) Where an aerial line erected in, over, along or across any street or other public place, ceases to be used as an electric supply-line, the owner shall maintain it in a safe mechanical condition in accordance with rule 68, or shall remove it.

(2) Where any aerial line ceases to be used as an electric supply-line, an Inspector may by a notice served on the owner, require him to maintain it in a safe mechanical condition or to remove it within fifteen days of the receipt of the notice.

CHAPTER IX.

ELECTRIC TRACTION.

81. *Additional rules for electric traction.*—(1) The rules in this Chapter apply only where energy is used for purposes of traction:

Provided that nothing in this Chapter shall apply to energy used for the public carriage of passengers, animals or goods on, or for the lighting or ventilation of the rolling-stock of, any railway or tramway subject to the provisions of the Indian Railways Act, 1890.

IX of 1890.

(2) In this Chapter the conductor used for transmitting energy to a vehicle is referred to as the "line" and the other conductor as the "return".

(3) The owner of the line, return, rails or trolley-wire, as the case may be, shall be responsible for the due observance of rules 82 to 94.

82. *Pressure of supply to vehicle.*—No person shall supply energy at high pressure on any trolley-wire or other conductor used in direct electrical and mechanical connection with any vehicle, except with the written approval of the provincial Government and subject to such conditions as the provincial Government may think reasonable and proper in the circumstances.

83. *Insulation of lines.*—Every line shall be insulated throughout.

84. *Insulation of returns.*—(1) Where any rails on which cars run, or any conductors, laid between or within three feet of such rails, form any part of a return, such part may be uninsulated. All other returns or parts of a return shall be insulated, unless they are of such conductivity as to secure the conditions required by the rule 85 (2) and (3).

(2) Where any part of a return is uninsulated, it shall be connected with the negative terminal of the generator.

85. *Proximity to metallic pipes, etc.*—(1) Where an uninsulated return is in proximity to any metallic pipe, structure or substance, not belonging to the owner of the return, he shall, if so required by the owner of such pipe, structure or substance, connect his return therewith at the latter's expense.

(2) Where the return is partly or entirely uninsulated, the owner shall, in the construction and maintenance of his system, adopt such means for reducing the difference produced by the current between the potential of the uninsulated return at any one point and the potential of the uninsulated return at any other point as to ensure that the difference of potential between the uninsulated return and any metallic pipe, structure or substance in the vicinity shall not exceed four volts where the return is relatively positive, or one and one-third volts where the return is relatively negative.

(3) The owner of any such pipe, structure, or substance as is referred to in sub-rule (2) may, in respect of it, require the owner of the uninsulated return at reasonable times and intervals to ascertain by test in his presence, or in that of his representative, whether the condition specified in sub-rule (2) is fulfilled; and, if such condition is found to be fulfilled, all reasonable expenses of, and incidental to, the carrying out of the test shall be borne by the owner of the pipe, structure or substance.

86. *Difference of potential on return.*—Where the return is partly or entirely uninsulated, the owner shall keep a continuous record of the difference of potential, during the working of his system, between every junction of an insulated return with an uninsulated return and the point on the route most distant from that junction, and the difference of potential shall not, under normal running conditions, exceed a mean value of seven volts between the highest momentary peak and the average for the hour of maximum load.

87. *Leakage on conduit system.*—Where both the line and the return are placed within a conduit, the following conditions shall be fulfilled in the construction and maintenance of the system:—

(*a*) where the rails are used to form any part of the return, they shall be electrically connected, at distances apart of not more than 100 feet, with the conduit by means of copper strips having a cross-sectional area of at least one-sixteenth of a square inch or by other means of equal conductivity. Where the return is wholly insulated and contained within the conduit, the latter shall be connected with earth at the generating station or sub-station through an instrument suitable for the indication of any contact or partial contact of either the line or the return with the conduit; and

(*b*) the leakage-current shall be ascertained daily, before or after the hours of running, when the line is fully charged; and, if at any time it is found to exceed one ampere per mile of single tramway track, the transmission and use of energy shall be suspended unless the leakage is stopped within twenty-four hours.

88. *Leakage on other than conduit system.*—Where both the line and the return are not placed within a conduit, the leakage-current shall be ascertained daily before or after the hours of running, when the line is fully charged, and if at any time it is found to exceed one-half of an ampere per mile of single tramway track, the transmission and use of energy shall be suspended unless the leakage is stopped within twenty-four hours.

89. *Passengers not to have access to electric circuit.*—Precautions to the satisfaction of an Inspector shall be taken by the owner of every vehicle to prevent—

(*a*) the access of passengers to any portion of the electric circuit where there is danger from electric shock;

(*b*) any metal hand-rail or other metallic substance liable to be handled by passengers becoming charged.

90. *Current density in rails.*—Where rails on which cars run are used as a return, the current density in such rails shall not, under ordinary working conditions, exceed nine amperes per square inch of cross-sectional area.

91. *Isolation of sections.*—Every trolley-wire shall be constructed in sections not exceeding one mile in length, and means shall be provided for isolating each section.

92. *Minimum size and strength of trolley-wire.*—No trolley-wire shall be of less cross-sectional area than eight one-hundredths of a square inch or shall have an actual breaking load of less than 4,500 lbs.

93. *Height of trolley-wire and length of span.*—A trolley-wire or a traction-feeder on the same supports as a trolley-wire shall nowhere be at a height from the surface of the street of less than 17 feet, except

where it passes under a bridge or other fixed structure, or through or along a tunnel or mine-shaft or the like, in which case it shall be suspended to the satisfaction of an Inspector. The intervals between the supports shall not exceed 140 feet.

94. *Records.*—(1) The owner shall, so far as is consistent with his system of working, keep the following records, namely:—

(*a*) daily records showing:—

the maximum working current from the source of supply;

the maximum working pressure at the source of supply;

the difference of potential, as required by rule 86; and

the leakage-current (if any), as required by rule 87 and rule 88; and

(*b*) occasional records showing—

every test made under rule 85 (2) and (3);

every stoppage of leakage, together with the time occupied; and

particulars of any abnormal occurrence affecting the electrical working of the system.

(2) These records shall be open to inspection by an Inspector or by any person authorised in writing by an Inspector.

CHAPTER X.

ADDITIONAL PRECAUTIONS TO BE ADOPTED IN MINES AND OIL-FIELDS.

95. *Application of Chapter.*—(1) The rules in this Chapter apply only:—

(*a*) where energy is used in mines where the provisions of Part III of the Act apply; and

(*b*) where energy is used in oil-fields.

(2) In mines the rules in this Chapter do not apply to apparatus used above ground, excepting such apparatus as may directly affect the safety of persons below ground.

96. *Responsibility for observance.*—(1) It shall be the duty of the owner, agent, or manager of the mine, or of the agent of any company operating in the oil-field, or of the owner of one or more drilled wells situated in the oil-field, to comply with and enforce the following rules and it shall be the duty of all persons employed to conduct their work in accordance with the rules.

(2) An authorised person shall be on duty in every mine or oil-field while energy is being used therein.

97. *Notices.*—(1) On or before the first day of February in every year in every oil-field returns giving the size and type of apparatus and any particulars as to the circumstances of its use which may be required by the Inspector shall be sent by the persons specified in rule 96 in the form set out in Annexure IX.

(2) This rule does not apply to telephones and signalling apparatus or to low pressure installations for lighting only.

98. *Plans.*—(1) A correct plan on the same scale as the plan kept at the mine in fulfilment of the requirements of the Indian Mines Act, 1923, shall be kept in the office at the mine showing the position of all fixed apparatus and conductors in the mine, other than lights, telephones or signalling apparatus, or cables for the same. IV of 1923.

(2) A similar plan, on a scale of not less than sixteen inches to the mile, shall be kept by the manager or owner of one or more wells in any oil-field, showing similar particulars.

(3) A similar plan, on such scale as the Governor General in Council may require, shall be kept in the office of the licensee or person transmitting or distributing energy in a mine or oil-field, showing the position of all electric supply-lines under his control.

(4) The plans required by this rule shall be corrected every six months, and the dates of correction entered on them by the Manager of the mine or wells or the owner of the wells, and they shall be produced to an Inspector or an Inspector of Mines at any time on his request.

99. *Lighting, communications and fire precautions.*—(1) In a mine lighted by electricity, one or more safety lamps or other proper lights shall be kept continuously burning in all places where failure of the electric light at any time would be likely to cause danger.

(2) Efficient means shall be provided in every mine for communicating between the place in which the switchgear provided under sub-rule (1) of rule 106 is erected and the shaft-bottom or main distributing centre in the mine.

(3) Appliances for extinguishing fires shall be kept ready for immediate use in every place in a mine containing apparatus, other than cables, telephones and signalling apparatus.

100. *Isolation and fixing of transformer, switchgear, etc.*—(1) Where necessary to prevent danger or mechanical damage, transformers and switchgear shall be placed in a separate room, compartment, or box.

(2) Unless the apparatus is so constructed, protected, and worked as to obviate the risk of fire, no inflammable material shall be used in the construction of any room, compartment, or box containing apparatus, or in the construction of any of the fittings therein. Each such room, compartment, or box shall be substantially constructed and shall be kept dry.

(3) Adequate working space and means of access clear of obstruction and free from danger shall, so far as circumstances permit, be provided for all apparatus that has to be worked or attended to, and all handles intended to be operated shall be conveniently placed for that purpose.

101. *Method of earthing.*—Where earthing is necessary it shall be carried out in a mine by connection to an earthing system at the surface of the mine, in a manner approved by an Inspector.

102. *Earth or fault detectors.*—(1) Earth or fault detectors or recorders shall be connected up in every system in a mine to show immediately any defect in the insulation of the system.

(2) The readings of these instruments shall be recorded daily in a book kept at the generating station, sub-station or switch room.

103. *Earthing metal, etc.*—(1) All metallic sheaths, coverings, handles, joint-boxes, switchgear frames, instrument covers, switch and fuse covers and boxes, and all lampholders, unless efficiently protected by an earthed or insulating covering made of fire-resisting material, and the frames and bed-plates of generators, transformers, and motors (including portable motors), shall be earthed by connection to an earthing system in the manner prescribed in rule 101.

(2) Where the cables are provided with a metallic covering constructed and installed in accordance with clause (*d*) of rule 107, such metallic covering may be used as a means of connection to the earthing system.

(3) All the conductors of an earthing system shall have a conductivity at all parts and at all joints at least equal to 50 per cent. of that of the largest conductor used solely to supply the apparatus a part of which it is desired to earth.

Provided that no conductor of an earthing system shall have a cross-sectional area of less than ·022 of a square inch.

(4) All joints in earth conductors and all joints to the metallic covering of the cables shall be properly soldered or otherwise efficiently made.

(5) No switch, fuse, or circuit-breaker shall be placed in any earth conductor.

(6) This rule shall not apply (except in the case of portable apparatus) to any system in a mine in which the pressure does not exceed low pressure direct current or 125 volts alternating current.

104. *Motors and their transformers.*—(1) Where energy is distributed at a pressure higher than medium pressure:—

(i) it shall not be used without transformation to medium or low pressure except in fixed machines in which the high pressure parts are stationary; and

(ii) motors under 20 H. P. shall be supplied through a transformer stepping down to medium or low pressure.

(2) Where energy is transformed, suitable provision shall be made to guard against danger by reason of the lower pressure apparatus becoming accidentally charged above its normal pressure by leakage from, or contact with, the higher pressure apparatus.

105. *Switchgear and terminals.*—Switchgear and all terminals, cable-ends, cable-joints and connections of apparatus shall be totally enclosed, and shall be so constructed and installed as to comply with the following requirements:—

(i) all parts shall be of mechanical strength sufficient to resist rough usage;

(ii) all conductors and contact areas shall be of ample current-carrying capacity and all joints in conductors shall be properly soldered or otherwise efficiently made;

(iii) the lodgment of any matter likely to diminish the insulation or affect the working of any switchgear shall be prevented;

(iv) all live parts shall be so protected or enclosed as to prevent persons accidentally coming into contact with them and danger from arcs, short-circuits, fire, water, gas or oil;

(v) where there may be risk of igniting gas, coal-dust, oil or other inflammable material, all parts shall be so protected as to prevent open sparking; and

(vi) every switch or circuit-breaker shall be capable of opening the circuit it controls, without danger, or any short circuit with which it may have to deal.

106. *Cutting off supply.*—(1) Properly constructed switchgear for cutting off the supply of energy to the mine or oil-field shall be provided at the surface of the mine or oil-field at a point approved by an Inspector, or, in the case of the Burma oil-fields, by the Warden of the Oil-fields; and, during the time any cable is live, a person authorised to operate the said switchgear shall be available within easy reach thereof.

(2) Efficient means, suitably placed, shall be provided for cutting off all pressure from every part of a system, when necessary to prevent danger.

(3) Such efficient means shall be provided for cutting off all pressure automatically from the part or parts of the system affected in the event of a fault as may, in the opinion of an Inspector, be necessary to prevent danger.

(4) Every motor shall be controlled by switchgear for starting and stopping, so arranged as to cut off all pressure from the motor and from all apparatus in connection therewith, and so placed as to be easily worked by the person appointed to work the motor.

107. *Cables.*—All cables, other than flexible cables for portable apparatus, shall comply with the following requirements:—

(*a*) they shall be covered with insulating material (except that the outer conductor of a concentric system may be bare). They shall be efficiently protected from mechanical damage and supported at sufficiently frequent intervals and in such a manner as adequately to prevent damage to the cables or danger;

(*b*) (i) except as provided in clause (*c*), no cables other than concentric cables, or two-core cables or multi-core cables protected by a metallic covering, or single-core cables which contain all the conductors of the circuit, shall be used (1) where the pressure exceeds low pressure direct current or 125 volts alternating current or (2) when an Inspector considers that there is risk of igniting coal-dust or other inflammable material, and so directs; and

(ii) the lead sheath of lead sheathed cables and the iron or steel armouring of armoured cables respectively shall be of a thickness not less than that recommended from time to time by the British Standards Institution;

(*c*) where the medium pressure direct current system is used, two single-core cables may be used for any circuit, if their metallic coverings are bonded together by earth conductors so placed that the distance between any two consecutive bonds is not greater than 100 feet measured along either cable;

(*d*) the metallic covering of every cable shall be—

(i) electrically continuous throughout;

(ii) earthed, if it is required by sub-rule (1) of rule 103 to be earthed, by a connection to the earthing system of not less conductivity than the same length of the said metallic covering;

(iii) efficiently protected against corrosion where necessary;

(iv) of a conductivity at all parts and at all joints at least equal to 50 per cent. of the conductivity of the largest conductor enclosed by the said metallic covering; and

(v) where there may be risk of igniting gas, coal-dust, or other inflammable material, so constructed as to prevent, as far as is practicable, the occurrence of open sparking as the result of any fault or leakage from live conductors;

Provided that, where two single-core cables protected by metallic covering bonded together in accordance with clause (*c*) of this rule are used for a circuit, the conductivity of each of the said metallic coverings at all parts and at all joints shall be at least equal to 25 per cent. of the conductivity of the conductor enclosed thereby;

(*e*) cables and conductors where joined up to motors, transformers, switchgear, and other apparatus, shall be installed so that—

(i) they are mechanically protected by securely attaching the metallic covering to the apparatus; and

(ii) the insulating material at each cable end is efficiently sealed so as to prevent the diminution of its insulating properties.

Where necessary to prevent abrasion or to secure gas-tightness there shall be properly constructeod glands or bushes; and

(*f*) unarmoured cables or conductors, shall be either conveyed in pipes or casings or suspended from efficient insulators by means of some non-conducting material which will not cut the covering and which will prevent contact with any timbering or metal work. If separate uncased wires are used, they shall be kept at least one and a half inches apart and shall not be brought together except at lamps, switches and fittings.

108. *Flexible cables.*—(1) Flexible cables for portable apparatus shall be two-core or multi-core unless they are required for electric welding, and shall be covered with insulating material which shall be efficiently protected from mechanical damage. If a flexible metallic covering is used either as the outer conductor of a concentric system or as a means of protection from mechanical damage, it shall not be used by itself to form an earth conductor for the portable apparatus, but it may be used for that purpose in conjunction with an earthing core.

(2) Every flexible cable for portable apparatus shall be connected to the system and to the portable apparatus by a properly constructed connector.

(3) At every point where flexible cables are joined to main cables a switch shall be provided which is capable of entirely cutting off the pressure from the flexible cables.

(4) Every flexible cable attached to a portable machine shall be examined periodically by the person authorised to work the machine, and, if such cable is used underground, he shall examine it at least once in each shift. If such cable is found to be damaged or defective, it shall forthwith be replaced by a spare cable in good condition, and shall not again be used until it has been properly repaired.

109. *Portable machines.*—The person authorised to work an electrically driven coal-cutter or other portable machine shall not leave the machine while it is working and shall, before leaving the place where such machine is working, ensure that the pressure is cut off from the flexible trailing-cable which supplies such machine. Trailing-cables shall not be dragged along by the machine when working.

110. *Sundry precautions.*—(1) All apparatus shall be kept clear of obstruction and free from dust, dirt and moisture.

(2) Inflammable or explosive material shall not be stored in any room, compartment, or box containing apparatus, or in the vicinity of apparatus.

(3) Should there be a fault in any circuit, the part affected shall be made dead without delay, and shall remain so until the fault has been remedied.

(4) While lamps are being changed the pressure shall be cut off.

(5) No lampholder shall be in metallic connection with the guard or other metal work of a portable lamp.

111. *Precautions where gas exists.*—(1) In any part of a mine or oil-field in which inflammable gas or vapour, whether normally present or not, is likely to occur in quantity sufficient to be indicative of danger, and in any working approaching such part, the following additional requirements shall be satisfied as regards all apparatus:—

(*a*) all cables, apparatus, signalling wires and signalling instruments shall be so constructed, installed, protected, worked and maintained, that in the normal working thereof there shall be no risk of open sparking;

(*b*) all motors shall be so constructed that, when any part is live, all rubbing contacts (such as commutators and slip-rings) are so arranged or enclosed as to prevent open sparking;

(*c*) the pressure shall be cut off the apparatus immediately if open sparking occurs, and during the whole time that examination or adjustment disclosing parts liable to open sparking is being made. The pressure shall not be switched on again until the apparatus has been examined by the electrician or one of his duly appointed assistants and the defect, if any, has been remedied or the adjustment made;

(*d*) every electric lamp shall be enclosed in an air-tight fitting, and the lamp globe shall be hermetically sealed; and

(*e*) a safety lamp shall be provided and kept continually burning near each motor when working and, should the appearance of the flame of such safety lamp indicate the presence of inflammable gas, the pressure shall be cut off immediately from all apparatus in the vicinity and the matter shall be reported forthwith to an official of the mine.

(2) If at any time in any place the percentage of inflammable gas in the general body of the air is found to exceed one and a quarter, the supply of energy shall be cut off immediately from all cables and apparatus in that place and shall not be recommenced so long as the percentage of inflammable gas exceeds that amount.

112. *Shot-firing.*—(1) When shot-firing is being carried on adequate precautions shall be taken to protect conductors and apparatus from injury.

(2) Current from lighting or power circuits shall not be used for firing shots.

(3) Shot-firing cables shall be covered and protected as provided by rule 108 for flexible cables. Adequate precautions shall be taken to prevent them from touching other cables and apparatus.

113. *Signalling.*—Where electrical signalling is used:—

(*a*) adequate precautions shall be taken to prevent signal and telephone wires from touching cables and other apparatus;

(*b*) the pressure used in any one circuit shall not exceed 25 volts; and

(*c*) contact makers shall be so constructed as to prevent the accidental closing of the circuit.

114. *Haulage.*—Haulage by electric locomotives on the overhead trolley-wire system, at pressures not exceeding medium, and haulage by storage battery locomotives, may be used with the prior consent in writing of an Inspector, and subject to such conditions affecting safety as he may impose.

115. *Supervision.*—(1) An electrician shall be appointed in writing by the owner, agent or manager of the mine or by the agent or the owner of one or more wells in an oil-field to supervise the apparatus. If necessary for the proper fulfilment of the duties detailed in this rule, one or more assistants to the electrician shall be appointed by the aforesaid authority.

(2) Every person appointed to work, supervise, examine, or adjust any apparatus shall be competent for the work that he is set to do. No person except the electrician, or a competent person acting under his supervision, shall undertake any work where, in order adequately to avoid danger, technical knowledge or experience is required.

(3) The electrician shall be responsible for the proper performance by himself or by an assistant appointed under sub-rule (1) of the following duties, namely:—

(i) the thorough examination of all apparatus (including the testing of earth conductors and metallic coverings for continuity) as often as may be necessary to prevent danger; and

(ii) the examination and testing of all new apparatus, and of all apparatus re-erected in the mine before it is put up into service in a new position.

(4) In the absence of the electrician for more than three days the owner, agent or manager of the mine or the agent or owner of one or more oil-wells in an oil-field shall appoint in writing an efficient substitute.

(5) The electrician or the substitute appointed for him under sub-rule (4) shall keep at the mine or oil-field a log-book made up of daily log-sheets kept in the form set out in Annexure X. The log-book shall be produced at any time on request to an Inspector of Mines or an Inspector.

116. *Exemptions.*—(1) The provisions of rules 96 to 113, both inclusive, and 115, shall not apply in any case in which exemption is obtained, on such conditions as he may prescribe, from an Inspector, or, in the case of the Burma oil-fields, from the Warden of the Oil-fields, on the ground either of emergency or special circumstances.

CHAPTER XI.

MISCELLANEOUS.

117. *Relaxation by Government.*—(1) The provincial Government or, where mines, oil-fields or railways are affected, the Governor General in Council may, by order in writing, direct that any of the provisions of rules 38 to 45 and of Chapters VI, VII, VIII and IX of these rules, shall be relaxed in any particular case to such extent and subject to such conditions as it or he may think fit.

(2) The Governor General in Council may by order in writing direct that any of the provisions of Chapter X of these rules shall be relaxed in any particular case to such extent and subject to such conditions as he may think fit.

118. *Relaxation by Inspector.*—(1) An Inspector may, by order in writing, direct that any of the provisions of rules 46, 57, 61, 63, 66, 67, 68, 69 (1) (a), 73, 74, 75 and 76 shall be relaxed in any particular case to such extent and subject to such conditions as he may think fit.

(2) Where the pressure on any system does not exceed 125 volts an Inspector may, by order in writing, direct that any of the provisions of rules 38 to 45, both inclusive, 49, 55, 56, 58 to 70, 72 to 111 and 115, shall be relaxed as regards such system to such extent and subject to such conditions as he may think fit.

(3) Every relaxation so directed shall be reported forthwith to, and shall be subject to disallowance or revision by, the provincial Government, or where the relaxation affects mines, oil-fields or railways, the Governor General in Council.

119. *Supply of energy by non-licensees.*—Where any person other than the non-licensee is supplied with energy by a non-licensee or has his premises for the time being connected for the purposes of a supply of energy with the works of a non-licensee, such person shall be deemed

to be a consumer for the purposes of rules 38 to 40 inclusive, 48 and 60 and the non-licensee shall be subject to all the liabilities imposed on a licensee by those rules.

120. *Responsibility of Agents and Managers.*—Where any licensees, non-licensees or owners, are responsible for the observance of any of these rules, the agents and managers of such licensees, non-licensees or owners shall be jointly responsible for the observance of these rules in respect of any matters under their control.

121. *Mode of entry.*—All persons entering, in pursuance of the Act or these rules, any building which is used as a human dwelling or a place of worship shall, in making such entry, have due regard, so far as may be compatible with the exigencies of the purpose for which such entry is made, to the social and religious usages of the occupant of the building entered.

122. *Penalty for breaking seal.*—Where, in contravention of rule 31, any seal referred to in that rule is broken,—

(*a*) the person breaking the seal shall be punishable with fine which may extend to two hundred rupees; and

(*b*) the consumer when he has not himself broken the seal shall be punishable with fine which may extend to fifty rupees unless he proves that he used all reasonable means in his power to ensure that the seal should not be broken.

123. *Penalty for breach of rule 48.*—Where any electrical installation work of the nature specified in rule 48 has been carried out otherwise than—

(*a*) under the direct supervision of a person holding a certificate of competency issued by the provincial Government under that rule; and

(*b*) in the absence of any applicable exemption under the proviso to sub-rule (1) of that rule, by an electrical contractor licensed by the provincial Government in this behalf;

the consumer or owner, the contractor (if any) through whom the work was carried out, and the person under whose immediate supervision it was carried out shall each be punishable with fine which may extend to three hundred rupees.

124. *Penalty for breach of rules.*—Whoever, being a licensee or non-licensee or consumer or authorised person, or the agent or manager of a licensee, non-licensee or consumer commits a breach of these rules or, being a person specified in rule 70 (1) commits a breach of that rule shall be punishable for every such breach with fine which may extend to three hundred rupees, and in the case of a continuing breach with a further fine which may extend to fifty rupees for every day after the first during which the breach has continued.

125. *Application of rules.*—Subject to the provisions of sub-section (2) of section 58, these rules shall be binding on all persons, companies, and undertakings to whom licences have been granted or with whom agreements have been made by or with the sanction of Government for the supply or use of electricity before the commencement of the Act.

ANNEXURE I.

[SEE RULE 2 (1) (b).]

Specification relating to the Deposition of Silver.

The electrolyte shall consist of a solution of from 15 to 20 parts by weight of silver nitrate in 100 parts of distilled water. The solution must only be used once, and only for so long that not more than 30 per cent. of the silver in the solution is deposited.

The anode shall be of silver, and the kathode of platinum. The current density at the anode shall not exceed 1/5 ampere per square centimetre and at the kathode 1/50 ampere per square centimetre.

Not less than 100 cubic centimetres of electrolyte shall be used in a voltameter.

Care must be taken that no particles which may become mechanically detached from the anode shall reach the kathode.

Before weighing, any traces of solution adhering to the kathode must be removed and the kathode dried.

ANNEXURE II.

[SEE RULE 7 (1).]

Scale of Fees for comparison with the Government of India Standards referred to in Rule 2 (1).

	Rs.
For an instrument intended to be used as a sub-standard and submitted for special examination and testing	80
If required to be kept under observation for a period longer than one month, for each additional month or part of a month	40
For determining a resistance of standard form to higher accuracy obtainable, at one temperature	20
For determining the E. M. F. of a standard cell to highest accuracy obtainable, at one temperature	15

NOTE 1.—The instruments and apparatus under test are to be delivered at and removed from the Government Electrical Laboratory, Bhowanipore, Calcutta, free of cost to Government.

NOTE 2.—In tests requiring the expenditure of a considerable amount of power, a charge to cover the actual costs of the energy used, may be made.

ANNEXURE III.

[SEE RULE 14.]

Model Form of Draft Licence under the Indian Electricity Act, 1910.

[SEE SECTION 3.]

Electric Licence, 19 .

DRAFT LICENCE.

Signature of Applicant or
his Agent (if any).

Address of Applicant.

THE ELECTRIC LICENCE, 19 .

Licence for the supply of energy granted by the Government of under the Indian Electricity Act, 1910.

Licence is hereby granted to[1]

[1] The licensee may be any local authority, company or individual. In the case of a firm give names of individual partners.

[carrying on business in partnership under the name and style of]
to supply electrical energy in the area,[1] with the powers and upon the terms and condition all specified below.

Short title.

1. This licence may be cited as " The [2] Electric Licence 19 ."

Interpretation.

2. In this licence :—

(1) " the Act " shall mean the Indian Electricity Act, 1910 ;
(2) the expression " the licensees " shall mean and include the said [3] and their [or his] permitted assigns ; and
(3) the expression " deposited map " shall mean the plan of the area of supply hereinafter specified which has been deposited with Government in pursuance of the Rules under the Act, which plan is signed for the purpose of identification by the Secretary to the Government of in the Department, and by the applicants under the name and style of .
(4) other words and expressions have the same meaning as are assigned to them in the Act or the Rules made thereunder.

Security.[4]

3. (*1*) The period within which, under clause I (*b*) of the Schedule to the Act, the licensee shall show that he is in a position fully and efficiently to discharge the duties and obligations imposed on him shall be

(*2*) The period within which, under clause I (*b*) of the Schedule to the Act, the licensee shall deposit or secure such sum as therein mentioned, and the sum so to be deposited or secured, shall, unless otherwise ordered by the Government under that clause, be and Rupees respectively.

Area of supply.[5]

4. The area within which the supply of energy is authorised by this licence (the area of supply under the Act) is the whole of the area bounded as follows :—

North—By
East—By
South—By
West—By

the boundaries whereof are delineated in the deposited map.

Power to lay mains outside area of supply.[6]

5. The licensee may lay down or place electric supply-lines for the conveyance and transmission of energy from a generating station situated or to be situated at outside the area of supply to the boundary of the area of supply.

Limits within which the supply of energy is to be compulsory.[7]

6. (*1*) The works to be executed to the satisfaction of the Government under clause IV of the Schedule to the Act are the following, namely :—[8]

(*2*) If the licensee fails to comply with the provisions of sub-clause (*1*), the licence may be revoked.[9]

---

[1] See clause 4.
[2] Short title to agree with heading.
[3] Individual names as in preamble in the case of a firm.
[4] See section 4 (*1*) (*c*) of the Act and clause I of the Schedule to the Act.
[5] The area for which each local authority is constituted should be distinctly marked or coloured. See rule 11 (*b*).
[6] This clause should be retained only where the licensee is to supply energy from a generating station outside the area of supply. Where power to cross an intervening area is sought under section 3 (*1*) of the Act enter details here.
[7] See section 3 (*2*) (*d*) of the Act.
[8] It is open to the licensee to propose a " compulsory area " or to the provincial Government to make provision for such an area Ordinarily it will be sufficient to enter here the names of " compulsory streets " in which the licensee will lay distributing mains. If no compulsory works are specified in the license, the provincial Government may subsequently direct what works are to be executed ; see clause IV of Schedule to the Act.
[9] See note to sub-clause (*1*) of this clause.

Nature of the supply and limits of price to be charged for the supply of energy.

7. (*1*) The nature of the supply shall be or such other as the provincial Government may allow.

(*2*) The prices to be charged by the licensee for energy supplied by him shall not exceed the following maxima, namely :—

or in the case of a method of charge approved by the Government in accordance with sub-sections (*3*) and (*4*) of section 23 of the Act, such maxima as the Government may fix on approving the method.

Breaking up of streets, railways and tramways. [1]

8. The licensee is specially authorised to open and break up the soil and pavement of the following streets or parts of streets which are not repairable by the Government or by a local authority, and of the following railways and tramways or parts of railways and tramways, namely :—

(*a*) Streets.

(*b*) Railways.[2]

(*c*) Tramways.[2]

Purchase of undertaking.

9. (*1*) The option of purchase given by sub-section (*1*) of section 7 of the Act shall be exercisable on the expiry of a period of 50 years,[3] from the date of the notification of this licence and on the expiry of every subsequent period of 20 years (and the terms[4] of such purchase shall be). The percentage of the value to be determined in accordance with and for the purpose of sub-section (*1*) of section 7 of the Act of the lands, buildings, works, materials and plant of the licensee therein mentioned to be added under the second proviso of that sub-section to such value on account of compulsory purchase shall be per cent.

(*2*) In accordance with clause (*d*) (*ii*) of sub-section (*2*) of section 3 of the Act, it is hereby declared that the generating station to be used in connection with the undertaking shall/shall not form part of the undertaking for the purpose of purchase under section 5 of section 7 [5].

Additions to, variations from, and exceptions from the schedule to the Act. [6]

10. (*1*) In pursuance of clause (*f*) of sub-section (*2*) of section 3 of the Act, it is hereby expressly declared that the provisions contained in the Schedule to the Act shall for the purposes of this licence be supplemented by the addition of the following clauses, namely:— [7]

(*2*) In pursuance of clause (*f*) of sub-section (*2*) of section 3 of the Act, it is hereby expressly declared that the clauses of the Schedule to the Act mentioned below shall be varied in the manner hereinafter indicated, namely :—

(*3*) In pursuance of clause (*f*) of sub-section (*2*) of section 3 of the Act, it is hereby expressly declared that clause(s) of the Schedule to the Act shall be excepted from incorporation in this licence.

NOTE.—In the preparation of a draft licence the above model form may be varied, or added to, by the applicant so far as the Act and rules admit.

Rules Nos. 11 to 15 inclusive, as to applications for licences, should be consulted. In drawing up a draft licence the attention of the applicant is more particularly directed to the following sections of the Act, *viz.*, 3, 4, 7, 10, 11, 12, 21, 22, 23, 27, 51 and 57; the powers under section 51 can only be conferred after the grant of the licence.

In the case of licences for bulk supply, see clause IX of the Schedule to the Act and the proviso to clause (*f*) of sub-section (*2*) of section 3 of the Act also clause (*b*) of section 10 of the Act.

---

[1] This clause to be omitted if no such powers are required in the licence. See section 12 (*5*) of the Act and proviso to the same. Powers can be obtained subsequently; see rule 23.

[2] In ordinary cases the level-crossings or points at which interference is proposed must be specified.

[3] The periods after which an option to purchase arises may be less than 50 and 20 years, respectively.

[4] The terms must not differ from those laid down in the Act unless the powers of section 10 are invoked to modify or cancel them.

[5] The generating station or stations belonging to the licensee should ordinarily be included except where they form part of a traction undertaking previously authorised.

[6] To be omitted if not required in any draft licence.

[7] The latter part of the clause may require modification according to the circumstances.

ANNEXURE IV.

Model Form of Accounts prescribed under the Indian Electricity Act, 1910, for Local Authorities.

[SEE SECTION 11 AND RULE 36(3).]

ELECTRIC LICENCE.

THE †

Year ending 31st December 19 . / 31st March 19 .

I.—Statement as to loans authorised for the purposes of the undertaking referred to in the abovementioned licence prior to the end of the year for which accounts are made up.

Amounts sanctioned and nature of loan.	Amount borrowed.				Amount repaid.				Amount sanctioned but not borrowed.
	At per cent.	At per cent.	At per cent.	Total.	At per cent.	At per cent.	At per cent.	Total.	

† Enter designation of local authority.

Local Authorities Accounts.

No. II.—CAPITAL ACCOUNT.

For the year ending 31st December 19 . / 31st March 19 .

Dr. Cr.

	Expenditure up to end of previous year.	Expended during the year.	Total expenditure to		Receipts up to end of previous year.	Received during the year.	Total receipts to
1. To preliminary expenses (to be specified).				1. By amount raised by loans.			
2. To lands, including law charges incidental to acquisition.				2. By amount received as Government contribution.			
3. To value of lands appropriated for electrical purposes, as per contra.				3. By value of lands belonging to authority appropriated for electrical purposes.			
4. To buildings ..							
5. To plant ..							
6. To mains ..				4. By value of surplus lands sold.			
7. To service connection							
8. To transformers, etc.				5. By other receipts (to be specified).			
9. To meters and fees for certifying under the Act.							
10. To general stores ..				6. By amount transferred from Net Revenue Account.			
11. To transfer to Sinking Fund of value of lands sold, as per contra.							
12. To amount applied to the reduction of principal of borrowed money from value of (2), lands sold, as per contra.							
13. To special items (to be specified.)							
Total expenditure ..							
To balance of Capital Account.							

Local Authorities Accounts.

No. III.—REVENUE ACCOUNT.

For the year ending 31st December 19 . / 31st March 19 .

Dr.			Cr.		
A.—Generation.			1. By balance from last account.		
1. To fuel ..			Less bad debts written off.		
2. To oil, waste, water and engine-room stores.			2. By sale of energy for lighting purposes.		
3. To proportion of salaries of engineers, superintendents and officers.			3. By sale of energy for power purposes.		
4. To wages and gratuities			4. By sale of energy under special contracts.		
5. To repairs and maintenance as follows :—			5. By public lighting ..		
Buildings ..			6. By rental of meters and other apparatus on consumer's premises.		
Plant ..					
To special items (to be specified).					
6. To other items (to be specified).			7. By rents receivable ..		
B.—Distribution.			8. By service connnections		
1. To proportion of salaries of engineers, superintendents and officers.			9. By miscellaneous receipts from consumers.		
2. To wages and gratuities			10. By other items (to be specified).		
3. To repairs, maintenance and renewals of mains.					
4. To repairs, maintenance and renewals of transformers, etc.					
5. To repairs, maintenance and renewals of meters, switches, cut-outs and other apparatus on consumer's premises.					
C.—Public lamps.					
1. To attendance and repairs.					
2. To renewals, etc. ..					
D.—Rents, rates and taxes.					
1. To rents payable ..					
2. To rates and taxes ..					
Carried over ..					

Local Authorities Accounts.

No. III.—REVENUE ACCOUNT—*concld.*

Dr.					Cr
Brought forward ..					
E.—Management expenses.					
1. To salaries, *viz.*—					
Engineer's Department					
Clerical Department ..					
2. To general establishment charges.					
F.—Law charges					
To Law expenses ..					
G.—Special charges.					
To special items (to be specified).					
Total expenditure ..					
Amount carried to Net Revenue Account.					
Balance carried to next account to provide for bad debts.					
Total ..			Total ..		

Local Authorities Accounts.

No. IV.—NET REVENUE ACCOUNT.

Dr.		Cr.	
1. To interest on mortgage debt accrued due to date.		1. By balance from last account.	
2. To instalments of principal of money borrowed.		2. By balance brought from Revenue Account (No. III).	
3. To amount transferred to Capital Account.		3. By interest on money at deposit.	
4. To amount transferred to Sinking Fund where such fund is authorised.			
5. To payments to Reserve Fund where such is authorised.			
6. To sum applied to local rate ..			
7. To income-tax paid ..			
To balance carried forward			
Total ..		Total ..	

No. V.—SINKING FUND ACCOUNT.

Dr.	Stock.		Cr.	Stock.	
1. To amount paid for purchase of (nature of investment to be specified).			1. By balance brought from last account.		
2. To stock sold during period of account.			2. By amount brought from Net Revenue Account.		
3. To amount of principal of borrowed money repaid.			3. By interest on investment.		
4. To amount of balance to next account.			4. By value of lands transferred from Account II.		
			5. By amount realized by sale of stock (nature of stock to be specified).		
			6. By stock purchased ..		
Total ..			Total ..		

Local Authorities Accounts.

No. VI.—RESERVE FUND ACCOUNT.

DR. CR.

	Stock.				
1. The amount paid for purchase of (nature of investment to be specified).			1. By balance brought from last account.		
2. To stock sold ..			2. By amount transferred from net revenue account.		
3. To sum transferred to revenue account.			3. By stock purchased ..		
4. To amount of balance to next account.			4. By amount realized by sale of stock (nature of stock to be specified).		
Total ..			Total ..		

No. VII.—GENERAL BALANCE SHEET.

DR. CR.

Liabilities.		*Assets.*	
1. To capital account: Amount received as per account No. II.		1. By capital account: Amount expended for works as per account No. II.	
2. To sundry creditors ..		2. By stores on hand ..	
3. To net revenue account: Balance at credit thereof.		3. By sundry debtors for current supplied to end of the year.	
4. To sinking fund account		4. By other debtors ..	
5. To reserve fund account		5. By securities as h c'c (cost price).	
6. To other items (to be specified).		6. By other items (to be specified).	
		7. By cash with treasurer	
		8. By cash in hand ..	
Total ..		Total ..	

Local Authorities Accounts.

No. VIII.—STATEMENT OF ENERGY GENERATED, SOLD, ETC.

Total energy generated in Kilowatt-hours.	Kilowatt-hours sold.					Kilowatt-hours used on works.	Kilowatt-hours not accounted for.	Total Kilowatt-hours accounted for.	Kilowatts connected for public lamps.	Total consumers connected.	Total Kilowatts connected.*	Plant installed, Kilowatts.	Maximum supply demanded in Kilowatts.
	Public lamps.	By Special contract.*	Consumers by meter for lighting purposes.	Consumers by meter for power purposes.	Total.								
1	2	3	4	5	6	7	8	9	10	11	12	13	14

* Where the undertaking supplies power to tramways the units sold to the tramway should be treated as sold by "special contract". In calculating the "total kilowatts connected" the kilowatts connected exclusive of the tramway should first be ascertained; then the kilowatts connected to the tramway system should be assumed to bear the same ratio to the units used on the tramway as the remaining kilowatts connected bear to their consumption.

ANNEXURE V.

Model Form of Accounts prescribed under the Indian Electricity Act, 1910, for Companies.

[SEE SECTION 11 AND RULE 36 (3).]

ELECTRIC LICENSE.

The† Company.

For the year ending $\frac{\text{31st December 19 .}}{\text{31st March 19 .}}$

Statement of Share Capital appropriated for the purposes of the undertaking authorised by the abovementioned licence at the end of the year.

No. I.

Description of Capital.	Authorised by	No. of shares issued.	Nominal amount of share.	Called up per share.	Total paid up.	Issued not paid-up.	Remaining unissued.	Total amount authorised.

Statement of Loan Capital appropriated for the purposes of the undertaking authorised by the abovementioned licence at the end of the year.

No. II.

Description of loan.	Amounts borrowed.				Remaining borrowing powers.	Total amount of borrowing powers.	
	At per cent.	At per cent.	At per cent.	Total.			

Total Share Capital Paid-up, see No. I.
Total Loan Capital Borrowed, see No. II.

Total Capital Received.

† Enter designation of Company.

Companies' Accounts.

No. III.—CAPITAL ACCOUNT.

For the year ending $\frac{\text{31st December 19 .}}{\text{31st March 19 .}}$

Dr. Cr.

—	Expenditure up to end of previous year.	Expended during the year.	Total expenditure to	—	Receipts up to end of previous year.	Received during the year.	Total receipts to
1. To preliminary expenses (to be specified).				By ordinary shares of.			
2. To lands including law charges incidental to acquisition.				Ditto			
3. To buildings				By preference shares of.			
4. To plant ..				By Debenture stock.			
5. To mains ..				By mortgages and bonds.			
6. To service connections.				By amounts received in anticipation of calls.			
7. To transformers, etc.				By other receipts (to be specified).			
8. To meters, and fees for certifying under the Act.							
9. To general stores.							
10. To special items (to be specified).							
Total expenditure							
To balance of Capital Account.							

Companies' Account.

No. IV.—REVENUE ACCOUNT.

For the year ending 31st December 19 . / 31st March 19 .

Dr.			Cr.		
A.—Generation.			1. By sale of energy for lighting purposes.		
1. To fuel			2. By sale of energy for power purposes.		
2. To oil, waste, water and engine-room stores.			3. By sale of energy under special contracts.		
3. To proportion of salaries of engineers, superintendents and officers.e			4. By public lighting ..		
4. To wages and gratuities			5. By rental of meters and other apparatus on consumer's premises.		
5. To repairs and maintenance as follows :—			6. By rents receivable ..		
Buildings			7. By transfer fees ..		
Plant			8. By service connections		
To special items (to be specified).			9. By miscellaneous receipts from consumers.		
			10. By other items (to be specified).		
B.—Distribution.					
1. To proportion of salaries of engineers, superintendents and officers.					
2. To wages and gratuities					
3. To repairs, maintenance and renewals of mains.					
4. To repairs, maintenance and renewals of transformers, etc.					
5. To repairs, maintenance and renewals of meters, switches, cut-outs and other apparatus on consumer's premises.					

Companies Accounts.

No. IV.—REVENUE ACCOUNT—*contd.*

Dr.					Cr.
C.—Public lamps.					
1. To attendance and repairs.					
2. To renewals, etc. ..					
D.—Rents, rates and taxes.					
1. To rents payable ..					
2. To rates and taxes ..					
E.—Management expenses.					
1. To Director's remuneration.					
2. To management ..					
3. To general establishment charges.					
4. To Auditors of Company					
5. To Auditor appointed under the provisions of the Act.					
F.—Law charges.					
To law expenses ..					
G.—Depreciation.					
1. To depreciation in respect of leasehold works.					
2. To depreciation in respect of buildings.					
3. To depreciation on plant					
4. To depreciation on mains					
5. To depreciation on transformers, etc.					
6. To depreciation on meters					
7. To depreciation on general stores.					

Companies' Accounts.

No. IV.—REVENUE ACCOUNT—*contd.*

Dr.					Cr.
G.—Depreciation—contd.					
8. To depreciation in respect of any other items (to be sp ecified).					
H.—Special charges.					
To special items (to be specified).					
Total expenditure ..					
Balance carried to net revenue.					

V.—NET REVENUE ACCOUNT.

Dr.					Cr.
1. To interest on debentures accrued due to date.		1. By balance from last account.			
2. To interest on mortgages and bonds accrued due to date.		Less dividend paid			
3. To interest on temporary loans accrued due to date.		By amount carried to Reserve Fund			
4. To dividend on preference stock.		2. By balance brought from Revenue Account (No. IV).			
5. To Income-tax paid ..		3. By interest on money at deposit.			
6. To balance applicable to dividend on ordinary stock or shares.					

Companies' Accounts.

VI.—RESERVE FUND ACCOUNT.

Dr.		Cr.	
1. Amount paid out (items to be specified).		1. By balance brought from last account.	
2. Amount of balance to next account.		2. By amount brought from Net Revenue Account.	
		3. By interest on amount invested.	
		(Description of investments to be specified.)	

VII.—DEPRECIATION FUND ACCOUNT.

Dr.		Cr.	
To balance		1. By balance from last account	
		2. By interest on investments ..	
		3. By amount brought from Revenue Account (see No. IV-G.).	
		(Description of investments to be specified.)	

Companies' Accounts.

VIII.—GENERAL BALANCE SHEET.

Dr.		Cr.	
Liabilities.		*Assets.*	
1. To capital account: amount received as per Account No. III.		1. By capital account: amount expended for works as per Account No. III.	
2. To sundry creditors due on construction of plant and machinery, fuel, stores, etc.		2. By stores on hand ..	
3. To sundry creditors on open accounts.		3. By sundry debtors ..	
4. To net revenue account: balance at credit thereof.		4. By preliminary expenses awaiting adjustment.	
5. To reserve fund account: balance at credit thereof.		5. By securities as held (cost price).	
6. To depreciation fund account		6. By special items (to be specified).	
7. To special items (to be specified).		7. By cash at bankers ..	
		8. By cash on hand ..	
Total ..		Total ..	

Companies' Accounts.

No. IX.—STATEMENT OF ENERGY GENERATED, SOLD, etc.

Total energy generated in Kilowatt-hours.	Kilowatt-hours sold.					Kilowatt-hours used on works.	Kilowatt-hours not accounted for.	Total Kilowatt-hours accounted for.	Kilowatts connected for public lamps.	Total consumers connected.	Total Kilowatts connected.*	Plant installed Kilowatts	Maximum supply demanded in Kilowatts.
	Public lamps.	By special contract.	Consumers by meter for lighting purposes.	Consumers by meter for power purposes.	Total								
1	2	3	4	5	6	7	8	9	10	11	12	13	14

*Where the undertaking supplies power to tramways the units sold to the tramway should be treated as sold by "special contract." In calculating the "total Kilowatts connected" the kilowatts connected exclusive of the tramway should first be ascertained; then the kilowatts connected to the tramway system should be assumed to bear the same ratio to the units used on the tramway as the remaining kilowatts connected bear to their consumption

ANNEXURE VI.

Form of Requisition under Clause V(4) of the Schedule to the Act.

To

Name of licensee.

*We the undersigned, being owners or occupiers of premises situated in or upon street, within the "area of supply" specified in the licence, 19 , do

---

†The Government of (the ‡ of being charged with public lighting of street, within the area of supply specified in the licence, 19 , do

---

hereby require(s) you, in pursuance of clause V of the Schedule to the Indian Electricity Act, 1910, to provide, within six months of the date of this requisition, distributing mains throughout the said street§

Dated at

The day of 19 :

---

*In the case of six or more owners or occupiers.

†In the case of Provincial Government or a local authority.

‡The local authority's name will have to be inserted.

§Or such part of the street as may be specified.

ANNEXURE VII.

Form of Requisition under Clause VI (5) of the Schedule to the Act.

To

Name of licensee.

[I] hereby require you, in accordance with clause VI of the Schedule to the Indian Electricity Act, 1910, within one month or within such longer period as the Electric Inspector may allow, from the date of this requisition, to supply electrical energy for the premises owned (occupied) by me, situate within the "area of supply" specified in the

licence, 19 , for the following :—

Wiring work will be carried out by

Dated at

The day of 19 . Signature.

Note.—Under clause VI (*1*), 1st proviso, sub-head (*b*), of the Schedule to the Indian Electricity Act, 1910, the licensee shall not be bound to comply with any such requisition unless and until the person making it if required by the licensee so to do, pays to the licensee the cost of so much of any service line as may be laid down or placed for the purposes of the supply upon the property in respect of which the requisition is made, and of so much of any service line as it may be necessary for the said purposes to lay down or place beyond one hundred feet from the licensee's distributing main although not on that property.

ANNEXURE VIII.

Form of Order under Rule 5, Sub-rule (4).

To

licensee, non-licensee, consumer or occupier.

1. Whereas it appears to me that you have not complied with Rule of the Indian Electricity Rules, 1937 [in the following respects,* namely

you are hereby called upon to comply with the said rule on or before the.....th day of .....19....and to report compliance in writing to me.

2. An appeal may be filed against this order under rule 5 (4) of the Indian Electricity Rules within three months of the date on which this order is received by you ; but this order must be complied with, notwithstanding such appeal, unless the appellate authority, on or before the date specified in paragraph 1 above, suspends its operation.

Dated at Signature.

The day of 19 . Electric Inspector.

* Particulars to be given where necessary

ANNEXURE IX.

Form of Annual Return for Oil-fields.

(See Rule 97.)

This form must be correctly filled up by the owner, agent or manager, and sent to the Inspector not later than the first day of February 19 .

PART A.

Year ending 19 .

Name of Oil-field

Situation of Oil-field { District / Province

Postal address of Oil-field

Name and address of Owner

Name of Manager

Name of Under-Manager

ANNEXURE IX—*concld.*

Form of Annual Return for Oil-fields.

PART B.

Type and Horse-Power of Electrical Apparatus.

1.—System of Supply (whether direct current or alternating current.)

Voltage of Supply

Periodocity (if alternating current).

Source of Supply

2.—Voltage at which current is used for—

Lighting .. ..

Power .. ..

3.—Particulars of Motors, etc., in use on the field :—

(*a*) On wells.

No. or other identifying mark of well.	Drilling or pumping.	H. P. of Motor.	No. of lamps and type.	Other electrical appliances.

(*b*) Not on wells.

H. P. Motor.	Purpose for which used.	Identifying mark on map.

4.—Other electrical appliances, not included in item 3, in use on the field.

Appliances.	Size in K. W.	Purpose for which used.	Identifying mark on map.

ANNEXURE X.

Log Sheet for Mines and Oil-fields.

[See Rule 115 (5).]

Daily Log Sheet for 19

1. Name of electrician in charge :—

2. Report as to :—

(*a*) Condition of the insulation of the system :—

(*b*) Specific defects of insulation (particulars of each failure of apparatus should be given) :—

(*c*) Accidents or dangerous occurrence (including any cases of electric shock, and any cases of open sparking in apparatus in use in places where rule 111 applies) :—

(*d*) Examinations* of apparatus as provided by rule 115 :—

(*i*) Routine examinations as required by rule 115 (3) (*i*).

(*ii*) Special examinations* as required by rule 115 (3) (*ii*).

3. Remarks :—

Signed Electrician.

Examined by Manager.

Note.—This log sheet should be filled in as completely as possible. If, for instance, there are no defects of insulation to report, the word "none" should be written in the vacant space.

* State whch apparatus has been examined or tested and result.

A. G. CLOW,

Secretary to the Government of India.

FOREIGN AND POLITICAL DEPARTMENT.

NOTIFICATIONS.

New Delhi, the 31st March 1937.

No. 193-G.—With reference to notification No. 655-G., dated the 19th November 1936, the provisional recognition of the appointment of Mr. C. E. van Aken as Honorary Consul for the Netherlands at Calcutta, has been confirmed by His Majesty's Government.

No. 194-G.—With reference to notification No. 656-G., dated the 19th November 1936, the provisional recognition of the appointment of Mr. N. J. den Tex as Honorary Vice-Consul for the Netherlands at Calcutta, has been confirmed by His Majesty's Government.

H. A. F. METCALFE,

Foreign Secy. to the Govt. of India.

DEFENCE DEPARTMENT.

New Delhi, the 27th March 1937.

Part B.

(NAVY BRANCH.)

APPOINTMENT.

No. 212.—With reference to Defence Dept. (Navy Branch) Notn. No. 16, dated the 11th Jan. 1936, the services of Comdr. G. M. Osborne-Smith, R. I. N., will continue to remain at the disposal of the Govt. of India, Dept. of Commerce, for employment as Nautical Surveyor, Mercantile Marine Dept., Calcutta, with effect from the 5th Feb. 1936, *vice* Comdr. J. Cameron, vacated.

G. R. F. TOTTENHAM,

Secy. to the Govt. of India.

DEPARTMENT OF COMMERCE.

RESOLUTION.

TARIFFS.

New Delhi, the 27th March 1937.

No. 127-T. (1)/37.—The amount of protection afforded to the Sugar Industry by the duties imposed by section 2 of the Sugar Industry Protection Act, 1932, will determine on the 31st March 1938, and section 3 of that Act provides that the Governor-General in Council shall cause to be made by such persons as he may appoint in this behalf an enquiry to ascertain if the protection of the Sugar Industry during the period from 31st March 1938 to the 31st March 1946 should be continued to the same extent or to a greater or lesser extent. The Government of India have decided that this enquiry should be undertaken by the Tariff Board and the following terms of reference have been framed for its guidance:—

(a) The Board is requested to examine the measure of protection now enjoyed by the Sugar Industry and to report whether it is necessary to continue protection to this extent or to a greater or lesser extent;

(b) In making its recommendations the Tariff Board will take all relevant considerations into account including that stated in part (b) of the Resolution adopted by the Legislative Assembly on the 16th February 1923.

2. Firms and persons interested in the Sugar Industry or industries dependent on the use of sugar who desire that their views should be considered by the Tariff Board should address their representations to the Secretary of the Board.

ORDER.—Ordered that a copy of the above Resolution be communicated to all Local Governments and Administrations and the Political Officers, all Departments of the Government of India (except the Home Department), the Director-General of Commercial Intelligence and Statistics, the Central Board of Revenue, the Indian Trade Commissioners, London, Hamburg and Milan, the Secretary, Tariff Board, the High Commissioner for India, London, His Majesty's Trade Commissioner in India, the Canadian Trade Commissioner in India, all the Chambers of Commerce and Associations, the French Trade Commissioner in India, Burma and Ceylon, the Secretary, Imperial Council of Agricultural Research and the Chief Controller of Stores.

Ordered also, that it be published in the *Gazette of India*.

M. SLADE,

Joint Secy. to the Govt. of India (offg.).

DEPARTMENT OF INDUSTRIES AND LABOUR.

NOTIFICATION.

New Delhi, the 29th March 1937.

No. V.-52.—In exercise of the powers conferred by rule 53 of the Indian Aircraft Rules, 1920, the Governor-General in Council is pleased—

(*a*) to declare the civil aerodrome at Dum Dum (Calcutta) to be a customs aerodrome, and

(*b*) to appoint the Chief Customs Officer and the Customs Collectors for the time being appointed for the port of Calcutta, under the Sea Customs Act, 1878 (VIII of 1878), to be respectively the Chief Customs Officer and Customs Collectors for the purpose of the said Rules at the said customs-aerodrome.

S. N. ROY,

Joint Secy. to the Govt. of India

FINANCE DEPARTMENT (CENTRAL REVENUES).

NOTIFICATIONS.

CUSTOMS.

New Delhi, the 27th March 1937.

No. 21.—In pursuance of sub-section (*2*) of section 1 of the Land Customs (Amendment) Act, 1937 (III of 1937), the Governor-General in Council is pleased to appoint the 1st April 1937, as the date on which the said Act shall come into force.

No 22.—In exercise of the powers conferred by section 19 of the Sea Customs Act, 1878 (VIII of 1878), the Governor-General in Council is pleased to prohibit the bringing into British India by sea or by land of goods liable to duty under item No. 49 (1) (b) of the First Schedule to the Indian Tariff Act, 1934 (XXXII of 1934).

W. W NIND,

Joint Secy. to the Govt. of India.

Registered No. C207

The Calcutta Gazette

THURSDAY, APRIL 15, 1937.

PART IB

Educational Notices.

Office of the Director of Public Instruction, Bengal.

NOTIFICATION.

Calcutta, the 22nd March 1937.

Research Scholarships to be awarded in 1937.

Three Research Scholarships will be awarded for the encouragement of original research to candidates who have high and special qualifications and appear to be likely to conduct original research with success. The value of each scholarship is Rs. 75 a month.

2. Ordinarily one scholarship will be awarded annually to a student who proposes to carry on original research in scientific subjects, including such branches as natural and physical science, chemistry, mathematical science, etc., and another scholarship will similarly be awarded for research in literary subjects, including such branches as languages, comparative philology, palæography, epigraphy, philosophy, history, archæology, anthropology, etc., and the third scholarship will be awarded for research either in scientific or in literary subjects. No application for a research scholarship will be considered unless a candidate submits certificates showing that he has the capacity for undertaking the research proposed and a programme of work indicating a definite course of enquiry.

3. Election will be made in the first instance for one year only, with effect from the 1st July 1937, but a scholarship may be renewed from year to year up to the limit of three years, provided the scholar has throughout the year vigorously prosecuted original research in the subject selected by him.

4. Each candidate for a scholarship should submit his application through the head of the institution in which he last studied to the Director of Public Instruction, Bengal, on or before the 10th May next, and must produce evidence of having passed from a College or other institution in Bengal the M.A. or M.Sc. examination of the Calcutta or Dacca University, or of having obtained some other equivalent or higher degree of either of these Universities in 1934 or 1935 or 1936. He must state as definitely as possible the subject or part of the subject in which he intends, if elected to a scholarship, to carry on his original investigation. He must also state the name of the institution in which he proposes to work, with evidence that the authorities of the institution are able and willing to provide facilities for him, or if no institution is mentioned, the circumstances or conditions under which he proposes to work should be stated.

5. Each candidate is required to submit with his application a declaration to the effect that, if selected, he will not undertake any work, either paid or unpaid, or sit for any examination, or pursue any course of studies except that of original research in his selected subject during the tenure of his scholarship.

6. The application from each candidate should contain a note from the authority forwarding the application as to how long the proposed research will take.

7. The candidate must be a native or domiciled in Bengal.

8. Applications for this year's scholarships should be submitted in prescribed forms, which are obtainable from the Personal Assistant to the Director of Public Instruction, Writers' Buildings, Calcutta.

9. Applications submitted after the appointed date or not in the proper form will not be considered.

J. M. BOTTOMLEY,

Director of Public Instruction, Bengal.

Medical College, Calcutta, 1937.

Rules for the guidance of students seeking admission into the Medical College, Calcutta.

1. Two classes of students are admitted to the college:—

(*1*) *Civil pupils' class.*—Admission to this class is restricted to students, male or female, who were born within or whose parents are domiciled within the territorial jurisdiction of the Calcutta University. Three students are also eligible for admission from the Dacca University area and three from the Dacca Intermediate Board. Students from other provinces and from Indian States for whom places have been reserved are also eligible for admission to the college.

Only students who intend to take the M. B. examination of the Calcutta University are admitted to this class.

(*2*) *Military pupils' class.*—Only European or Anglo-Indian students are admitted to this class (see separate prospectus for military pupils whose admission is regulated by the Director-General, Indian Medical Service).

NOTE.—Casual students are not admitted. No students are admitted other than those in one or other of the above classes.

2. The minimum preliminary qualification for admission is the First Class Pass certificate of the I. Sc. examination of the Calcutta University with Physics, Chemistry and Mathematics or an examination recognised as equivalent to it. This rule may be relaxed in favour of Muhammadan students and such candidates having passed the said examination in the second division may be admitted, provided they are otherwise considered suitable, to make up the number allotted for the Muhammadan students. In assessing the claims of those eligible for admission special weight will be attached to proficiency in English.

3. (*a*) Female students qualified under rules 1 and 2 will be admitted to the college, provided there is a vacancy in the Swarnamoyee Hostel in which all female students must reside. For special reasons to be recorded in writing, the Principal may allow any female student to reside outside this Hostel.

(*b*) Female students studying in the college but belonging to provinces other than Bengal and not domiciled in Bengal will pay rents for accommodation in the Swarnamoyee Hostel.

4. The session commences with the summer term which begins on the 15th June and ends on the day before the commencement of the Durga Puja holidays. The winter term commences on the day after close of the Durga Puja holidays and ends on the 31st March.

5. All applications direct from new students in Bengal for admission to the college should be accompanied by a fee of Rs. 4 which will not be refunded.

All new students must apply for admission to the Principal, Medical College, Calcutta, in the prescribed form, available in his office before the 25th May except in the following cases:—

(*a*) Students from other provinces for which places are reserved should apply to the Inspector-General, Civil Hospitals, of those provinces for admission within such dates as that officer may prescribe.

(*b*) The candidates from Indian States will be nominated by the States themselves.

(*c*) Students from the Dacca University area will be selected as follows:—

(*i*) Three students will be selected by the Dacca University, and

(*ii*) Three students by the Chairman of the Dacca Intermediate and Secondary Education Board,

6. The number of civil students to be admitted each year is 105. Vacancies are allotted as follows:—

Other provinces and Indian States including 1 from Nepal State	8
Dacca	6
Surgeon-General's nominees	5
Women	5
Muhammadan	21
Others	60

Preference for admission will usually be given to candidates who have superior qualifications, but the final selection lies entirely with the Selection Committee appointed by Government.

(*a*) Besides the students nominated by the Indian States under rule 5 (*b*), one student will be nominated by the Inspector-General of Civil Hospitals, Central Provinces, six students (including one female student) by the Inspector-General, Civil Hospitals, Assam, and six by the authorities mentioned in rule 5 (*c*).

These students must possess the qualifications mentioned in rule 2 and the nomination must reach the Principal, Medical College, Calcutta, before the 10th June each year, failing which the vacancies will be filled with local candidates. Vacancies arising by resignation or otherwise in places filled by reservation for the authorities in paragraph (*a*) cannot be filled again by those authorities during the year.

(*b*) Five seats shall be reserved annually for nomination by the Surgeon-General provided the candidates possess the necessary physical qualifications and at least a 2nd class pass certificate of the I.Sc. examination of the Calcutta University with the subjects mentioned in rule 2 or of an examination recognised as equivalent to it. These nominations shall ordinarily be made after the Selection Committee have made their choice under clause (*c*).

(*c*) The remaining vacancies shall be filled up by the Selection Committee specially appointed by Government from year to year. This Selection Committee will be the authority to select candidates belonging to Bengal.

(*d*) Every student selected by the Selection Committee for admission shall be examined medically in the Medical College, have his health card filled up and be passed fit before his fees are accepted, provided that if it is proposed to reject any student on the ground of his being medically unfit as a result of such examination, such decision shall not take effect unless it is sanctioned by the majority of votes of the members of the medical profession on the Selection Committee.

(*e*) Any candidate who has—

(*i*) endeavoured to enlist for his candidature the support of persons of influence or of Government officials,

(*ii*) personally canvassed any member of the Selection Committee or on whose behalf anyone else has canvassed any such member,

(*iii*) produced any letter of recommendation other than certificates from teachers or testimonials from persons under whom he has actually been employed,

shall be held to be disqualified for admission into the Medical College.

7. Of the total number of candidates nominated by the Selection Committee at least one-fourth should be Muhammadans, if a suitable number of qualified candidates belonging to that community can be obtained.

8. Selected candidates must pay the following fees within the time prescribed by the Principal, failing which their names will be struck off the rolls:—

	Rs.
Admission fee	25
Fees for summer term	100
Athletic Club fees	4
Caution money for Laboratory Practice ...	10
Total ...	139

(a) A student who without leave absents himself from the College or his hostel for more than one month, shall be removed from the rolls of the College, if the College Council so recommend. No refund of fees paid can be claimed in such cases.

Fees other than caution money once paid cannot be refunded except to those whose claim for refund is tenable under rule 17. The levy, accounting and disposal of caution money will be governed by the rules prescribed under Government order No. 1689Medl., dated the 24th May 1932.

9. Forms of application for admission will be issued from the 15th April and received up to the 25th May every year.

10. Failed students must apply for admission and pay the fees within the date prescribed by the Principal, otherwise their claim will lapse.

11. All civil students admitted after 1925-26 will pay Rs. 200 in two instalments, viz., Rs. 100 for the summer term and Rs. 100 for the winter term. They must also pay the annual Athletic Club fee of Rs. 4 (with the exception of female students) and any caution money due for attendance at practical classes along with the fees for their summer term. Fees once paid cannot be refunded except those whose claim for the refund is tenable under rule 17.

12. The fees for each term are to be paid in one instalment. The fees for the summer term are due (except from new students) on the 15th June and those for the winter term on the 1st November and must be paid together with athletic club fees, on those dates or on such later dates as the Principal may direct, after which a daily fine of annas four will be levied along with the fees on each defaulter. The names of students whose fees are more than 30 days overdue will be removed from the rolls of the college.

(a) A student detailed to hospital duty who overstays the authorised vacation leave without the permission of the Principal will be liable to pay a fine of Rs. 2 only for each day of overstay.

13. A student kept back in, or referred back to the class in which he was previously studying on account of his failure to appear at or pass any examination prescribed for promotion to the next higher class, will pay Rs. 50 each term until he passes the examination in question, after which he will pay fees on the full scale laid down in rule 11.

14. The fee for certificates issued to civil students leaving the college before completing their study shall be Rs. 40 for each course of lectures and practical classes and Rs. 30 for every three months of hospital practice.

[In calculating the sum to be paid under this rule the amount of college fees paid by the student (or in the case of a student enjoying a stipendiary scholarship and free tuition the amount of which would have been paid by him had he been a paying student) shall be deducted.]

15. Students who fail to appear at or to pass the Final M. B. Examination shall immediately on readmission after failure, pay fees each term at the rate of Rs. 25 for each of the subjects in which they are to appear at the subsequent examination.

16. The fee for post-graduate students undergoing a course of training in the Pathological, Bacteriological, Physiological or Chemical Laboratory is Rs. 90 for a period not exceeding six months.

17. Students who hold scholarships awarded by the Government of Bengal or Government scholarships awarded by the Board of Intermediate and Secondary Education, Dacca, and all holders of Mohsin Stipend irrespective of the authority granting such stipend are not required to pay the annual fee of Rs. 200 for the year in which they hold such scholarships if they are natives of Bengal or if their parents are domiciled in Bengal. All holders of other scholarships, whether granted by other Local Governments, Local Bodies or the Dufferin Fund, shall pay the same fees as Civil Students.

18. The following is the curriculum of the College:—

Civil students.

I. First Year (one summer term and one winter term)—

Lectures on Physics, Chemistry (Inorganic and Organic), Botany and Zoology and Practical Classes in all these subjects.

Test Examinations in each of these subjects will be held during the course of the First Year Class and students who fail* in these examinations will not be sent up for the Preliminary Scientific M.B. Examination. Students failing* to pass the Preliminary Scientific M.B. Examination of the Calcutta University four times within two years will be transferred to the Membership Course of the State Medical Faculty of Bengal. (Such students shall be allowed to appear at the Primary Membership Examination of the State Medical Faculty at the first two available examinations after their transfer to the Membership Course and they will be permanently removed from the rolls of the College in case of their failure* to pass the Primary Membership Examination in the second chance.)

N.B.—First year's course also includes Anatomy. In the summer term there will be demonstrations in which 75 per cent. of attendance is compulsory. In the winter term the superior extremity is to be dissected by the 15th of January

II. Second Year (one summer and one winter term)—

Lectures on Anatomy, Physiology, Practical Classes in Physiology and Dissections to be followed by Test Examinations in these subjects during the course.

Students failing* to pass the Test Examinations in Anatomy and Physiology will not be eligible for any scholarship and will not be promoted to the Third Year Class.

III. Third Year (one summer and one winter term)—

Lectures on Anatomy, Physiology and Materia Medica and Pharmacology, Dissections and Practical Classes in Anatomy, Physiology and Pharmacy followed by Test Examinations in Anatomy and Physiology.

Students who fail* in these Test Examinations will not be sent up for the First M.B. Examination. Students who fail* four times in two years at the First M.B. Examination will not be allowed to go on with the M.B. Course, but will be transferred to the Membership Course of the State Medical Faculty, Bengal. (Such students shall be allowed to appear at the Intermediate Membership Examination of the State Medical Faculty at the first two available examinations after their transfer to the Membership Course and they will be permanently removed from the rolls of the College in case of their failure* to pass the Intermediate Membership Examination in the second chance.)

IV. Fourth Year (one summer and one winter term)—

Lectures on Pharmacology and Materia Medica, Elementary Bacteriology and General Pathology, Medicine, Surgery and Clinical Medicine and Practical Classes in Elementary Bacteriology and Pathology.

Test Examinations in Elementary Bacteriology and General Pathology, Pharmacology and Materia Medica will be held during the course. Students who fail* in these Test Examinations will not be sent up for the Second M.B. Examination. This year's curriculum also includes Hospital Practice for 12 months and 20 practical classes in Clinical Methods and 30 Demonstrations in Practical Surgery and Bandaging. Students who fail* four times to pass the Second M.B. Examination will not be allowed to continue in the M.B., Course, but will be transferred to the Membership Course of the State Medical Faculty of Bengal.

*Failure to appear at an examination is equivalent to failure in the examination.

V. Fifth Year (one summer and one winter term)—

Lectures on Forensic Medicine and attendance at 12 Medicolegal Postmortem Examinations and Lectures on Hygiene and Public Health with Practical Demonstrations.

Test Examinations in these subjects will be held during the course. Students who fail* in these Test Examinations will not be sent up for the Third M.B. Examination. This year's curriculum also includes lectures on Medicine, Clinical Medicine, Surgery, Dental Surgery (Optional), Midwifery, 20 Demonstrations in Practical Midwifery and Hospital Practice for 12 months Students who fail* four times to pass the Third M.B. Examination will not be allowed to continue in the M.B. Course, but will be transferred to the Membership Course of the State Medical Faculty of Bengal.

VI. Sixth Year (one summer and one winter term)—

Lectures on Advanced Midwifery, Ophthalmic Surgery, Clinical and Operative Surgery, Mental Diseases, Hospital Practice for 12 months, including attendance in the special departments for diseases of the eye, ear, nose and throat and venereal diseases, elementary instruction in Radiology and classes in Special Pathology and in Surgical Anatomy.

Any student failing* to pass the Final M.B Examination of the Calcutta University within the limit of 19 months calculated from the date of the candidate's passing in a subject or subjects of the said examination, will be transferred to the Membership Course of the State Medical Faculty of Bengal.

*Failure to appear at an examination is equivalent to failure in the examination.

19. In order to qualify for signature for lectures and Practical Classes and attendance at Hospital 75 per cent. of possible attendance at lectures, demonstrations, Practical Classes and working days in the wards of the Hospital is compulsory. Absence with or without leave is calculated as non-attendance.

20. The following are the scholarships and rewards obtained by students:—

(*a*) Ten college scholarships of Rs. 12 each with free tuition tenable for one year awarded to the first ten students on the results of the Test Examination of the first year class, provided such students also pass the Preliminary Scientific M. B. Examination of the Calcutta University at the first attempt.

(*b*) Ten college scholarships of Rs. 12 each with free tuition tenable for one year awarded to the first ten students on the results of the second year's Test Examinations, provided they have not attended more than one course in the second year.

(*c*) Ten scholarships of Rs. 12 each with free tuition awarded to the first ten students on the results of the Test Examinations of the third year class, provided such students also pass the First M. B. Examination of the Calcutta University at the first attempt.

(*d*) Ten scholarships of Rs. 12 each with free tuition tenable for one year awarded to the first ten students on the results of the Test Examination of the fourth year class, provided such students also pass the Second M. B. Examination of the Calcutta University at the first attempt.

(*e*) Ten scholarships of Rs. 12 each with free tuition tenable for one year awarded to the first ten students on the results of the Test Examination of the fifth year class, provided such students also pass the Third M. B. Examination of the Calcutta University at the first attempt.

NOTE.—Only students of Bengal are allowed to compete for these scholarships. 40 per cent. is the pass mark for Text Examinations, 60 per cent. in the aggregate must be obtained by a candidate to be eligible for a scholarship. All scholarships are granted subject to good conduct and satisfactory progress.

(*f*) Six Government scholarships (one for each year) of the value of Rs. 25 will be awarded to the female students of the regular classes who do not hold Dufferin or other scholarships except Mrs. Mary Chandra's Scholarship.

(*g*) *Mohsin scholarships.*—Six stipends of the value of Rs. 15 each tenable in the Medical College, Calcutta, are annually awarded by the Director of Public Instruction from the Mohsin Endowment Fund to deserving poor Bengali Muhammadan students in the following manner:—

Two scholarshps on admission tenable for one year only on the result of the I. Sc. Examination.

Two scholarships tenable for two years on the result of the Preliminary Scientific M. B. Examination.

Two scholarships on admission tenable for three years on the result of the First M. B. Examination subject to their passing the Second and Third M. B. Examinations in regular course.

(*h*) A limited number of stipends will be granted to Muhammadan students in straitened circumstances who must prove to the satisfaction of the Principal that they are poor and deserving Bengali Muhammadan students.

21. If on account of the death, resignation or dismissal of any college scholar a scholarship falls vacant, such a scholarship for the remainder of its tenure will be awarded to the next best student in the list of the first scholarship examination or to such other students as the Principal may consider fit.

22. Holders of college scholarships, any other Government scholarships or Trust Fund Scholarships administered by Government are not eligible for the Durga Charan Laha Scholarship. Similarly a student already holding a scholarship, either on the results of the University Examination or granted by Government, is not eligible to compete for the college scholarships.

23. Civil students who at any time are kept back for a second year of study, in all the subjects of one curriculum, are thereby rendered ineligible for any of the stipendiary scholarships awarded by the Government of Bengal. They are, however, eligible for the special scholarships, Mohsin Stipends and class prizes and medals and certificates of honour of the college except the Sir Frank Connor Memorial Prize for which only the regular students are eligible.

24. Certificates of honour to the number of three in each subject, may be awarded by the Professor, subject to the sanction of the Principal, to students who have not obtained the medal but are deemed worthy of it (on the result of the test examination in that subject or any special Honours Examination held for the purpose).

25. The following is the list of prizes and special scholarships:—

List of prizes and special scholarships.

Name of reward.	Subject.	To whom open	Condition of grant.	When awarded.	Value and nature.	Tenure
					Rs. a.	
Goodeve Scholarship.	Midwifery ..	Civil students of fifth year's curriculum who are bona-fide natives of India of Hindu or Muhammadan parentage.	On the result of the special examination in Midwifery.	At the end of the fifth year.	12 0 per month	One year.
F. C. Chatterjee Scholarship.	Histology ..	Civil students of Indian parentage.	(*a*) The best student in Histology. Normal and Morbid, at the end of fourth year (*b*) Good conduct.	Annually in June	15 0 per month.	Ditto.
Abdul Gunny Scholarship.	....	Civil students	The best student in all subjects at the College Examinations of the first to fourth years inclusive.	Ditto	22 0 per month.	Ditto.
Prosector's Prize.	Anatomy ..	Ditto ..	(*a*) The first two students in Anatomy at the end of the second year. (*b*) Satisfactory work as prosector.	Annually	24 0	

Name of reward.	Subject.	To whom open.	Condition of grant.	When awarded.	Value and nature.	Tenure.
					Rs. a.	
Bholanath Bose's Prize.	Medicine or Surgery.	Civil students	The most successful student of the fourth year at bedside diagnosis of disease in Medicine or Surgery.	Annually	35 0	
Government Prize in Clinical Medicine.	Clinical Medicine.	Civil students and others.	The best clinical student of fourth and fifth years.	..	35 0	
Government Prize in Clinical Surgery.	Clinical Surgery.	Ditto ..	The best clinical dresser of fourth and fifth years.	..	Instruments worth not exceeding Rs. 35.	
Duke of Edinburgh's Prize.	Surgery ..	Civil students	To the best student of the fourth and fifth years.	..	28 0	
Raye Testimonial Prize.	Anatomy ..	Civil and Military pupils.	On the result of third year examination in Anatomy.	Annually	56 0	
Maharaja of Gwalior Prize.	Preliminary Scientific M. B. Examination.	Civil students	Highest marks at the Preliminary Scientific M. B. Examination and provided that the winner does not get any other prize.	Ditto	10 8	
Dr. Chandra's Scholarship.	Materia Medica and Therapeutics.	(1) Senior students of the Medical College. (2) Ex-senior students of the Medical College studying in a Medical College in India or Europe. (3) Any Graduate or Licentiate in Medicine of whatever standing	Examination and Thesis. Winner need not complete course of study in India.	Ditto	30 2 per month.	One or two years.
Mrs. Mary Chandra's Scholarship.	..	Female medical students of the second year.	To the female medical student who stands first at the first year's examination. No restriction on place of study afterwards.	Annually at the end of first year.	20 0 per month.	Two years.
Sir Pardey Lukis Memorial Scholarship.	Medicine ..	Civil and Military students.	To the student who stands first at the Honours Examination in Medicine at the end of the fifth year.	Annually at the end of the fifth year.	20 0 per month.	One year
Banku Behari Gupta Scholarship.	....	To a native of the Tangail subdivision.	Awardable to a student of the Tangail subdivision, preferably of village Bhatgram who has passed his Matriculation Examination from the Pogose School, Dacca.	Annually on admission.	10 0 per month.	Ditto.
Goodeve ..	Anatomy ..	Civil students	To the best Indian student of second year in the subject.	End of second year.	Silver.	
Macnamara ..	Chemistry ..	Ditto ..	To the best Indian student of first year class.	End of first year.	Do.	
Class ..	Ditto ..	Civil and Military students.	Ditto ..	Ditto	Gold.	
Class ..	Botany ..	Civil students	Ditto ..	Ditto	Do.	
Class ..	Comparative Anatomy.	Ditto ..	Ditto ..	Ditto	Do	
Class ..	Physiology ..	Civil and Military students.	To the best student of third year.	End of third year.	Do.	
Class ..	Anatomy ..	Ditto ..	Ditto ..	Ditto	Do.	
Class ..	Materia Medica and Pathology.	Ditto ..	To the best student of fourth year class in those subjects.	End of fourth year.	Do.	
Class ..	Medicine and Surgery.	....	To the best student of fifth year class in those subjects.	End of fifth year.	Do.	
Class ..	Midwifery ..	....	To the best student of the sixth year class in this subject.	End of the sixth year class.	Do.	

Name of reward.	Subject.	To whom open.	Condition of grant.	When awarded	Value and nature.	Tenure.
					Rs. a.	
Class ..	Dental Surgery	Civil students	To the best Civil students of the fifth year only.	End of fifth year	Gold.	
Class ..	Medical Jurisprudence and Hygiene	Civil and Military students	To the best student of fifth year.	Ditto	Do	
Class ..	Ophthalmic Surgery and Ophthalmic Medicine.	Civil students	To the best of sixth year Civil and fifth year Military students.	Ditto		
Orfilia ..	Medical Jurisprudence.	Ditto ..	To the best student at the oral and practical portion of the Pass Examination of the third M B., held in April.	Ditto	Silver.	
Calvert ..	Medicine ..	Ditto ..	To the student who stands second in the Honours Examination in Medicine at the end of fifth year.	Annually at the end of fifth year.	Do.	
Sutherland ..	Medical Jurisprudence.	Ditto ..	To the second best student in Practical Medical Jurisprudence at the third M B. Examination	End of fifth year	Do.	
Wilson ..	Operative Surgery.	Ditto ...	To the student of the sixth year class who secures the highest marks in Operative Surgery in an examination conducted by the Professor of Surgery.	Ditto	Do.	
Deare Prize ..	Clinical Medicine.	Ditto ..	To the best regular student of the sixth year class.	Annually	80 0 or thereabout.	
Anandalal Sanyal Prize.	Midwifery ..	Ditto ..	To the student who stands second in the class Assistantship Examination.	End of the fifth year.	95 0 Prize in books.	
Hemnath Ghosal Scholarship	....	Ditto ..	Student passing the First M. B. Examination of the Calcutta Medical College who stands next to the student securing Government scholarship.	At the end of third year.	7 0	One year
Shanks Medal	Clinical Pathology.	Ditto ..	To the best student of the fifth and sixth year classes on the results of a competitive examination in Clinical Pathology.	Annually	Silver Medal	
Sir Frank Connor Medal.	Surgical Anatomy.	Ditto ..	To the student of the sixth year class who obtains the highest number of marks in Surgical Anatomy.	Annually at the end of the Surgical Anatomy class and before the commencement of the Final M.B. Examination.	Do.	
Green-Armytage Prize.	Clinical Gynaecological and Obstetrical Pathology.	Sixth year Civil regular students and Final M B. passed students qualified not more than six months before examination.	To the best student	Annually	Money donation of Rs. 50 and a gold medal valued at Rs. 25	
Sir Frank Connor Memorial Prize.	Surgery ..	Regular student of the 6th year class.	To the student who stands first in Surgery at the Final Examination among the successful students of this College.	Ditto	In books or instruments to be settled by the Professor of Surgery.	
Dr. Lal Mohan Ghosal Silver Medal	Physiology	To the best student of the second year class.	On the result of the annual Test Examination at the end of the second year class.	Ditto	Silver Medal.	

MEDICAL COLLEGE, CALCUTTA.

Application for Enrolment.

To be submitted on or before the 25th May.

[No application will be registered unless a fee of Rs. 4 only is paid either personally or by money-order.]

N.B.—The admission is restricted to students who are born within or whose parents are domiciled within the territorial jurisdiction of the Calcutta University.

This application must accompany a certificate from the Principal of the College from which the candidate appeared in (or passed) the I.Sc. Examination that he had Physics, Chemistry and Mathematics in his I.Sc. course.

1. Name.....
2. Age.....
3. Race, caste or religion, nationality.....
4. Residence (native district, village and post office).....
   .....
5. Father's name (alive or deceased).....
6. (If father dead, guardian's name and residence.).....
   .....
   (State relationship with the guardian).....
7. Occupation and approximate annual income of father.....
8. Occupation and approximate annual income of guardian.....
9. Source of maintenance while a student.....
10. What University examination appeared (state name of college and roll number).....
11. What University examinations passed.....
    (*a*) In what division.....
    (*b*) From what college.....
    (*c*) In what year.....
    (*d*) From what University.....
    (*e*) In which of the subjects (Physics, Chemistry, Mathematics, Botany, Zoology) have you appeared or passed the Intermediate Examination in Science or the Bachelor of Science. { ....
12. What is your University registration number.....
13. Did you apply for admission in any previous year? If so, quote the registration number of your application with dates.....
    .....

We hereby certify that the above statement of particulars is true.

Signature of applicant .....
Address.....
Signature of the guardian.....
Address.....

Date.....

N.B.—Any candidate who has—
(*i*) endeavoured to enlist for his candidature the support of persons of influence or of Government Officials,
(*ii*) personally canvassed any member of the Selection Committee or on whose behalf anyone else has canvassed any such member,
(*iii*) produced any letter of recommendation other than certificates from teachers or testimonials from persons under whom he has actually been employed,
shall be held to be disqualified for admission into the Medical College.

T. C. BOYD, LT.-COL., I.M.S.,
Principal, Medical College, Calcutta.

GOVERNMENT OF BENGAL.

Bengal Veterinary College.

NOTICE.

Belgachia, Calcutta, the 5th April 1937.

The undermentioned students have passed, in order of merit, the Diploma Examination of the Bengal Veterinary College held in March 1937:—

Serial. No.	Name.
1	Monoranjan Sarkar.
2	Profulla Chandra Basu.
3	Satyendra Nath Banerjee.
4	Khurshid Ahmed Quraishi.
5	Yar Mohammad.
6	Saroj Kumar Das.
7	A. Vincent De Croos.
8	Naggehalli Venkatachar Doraswamy.
9	L. Venkita Jelam.
10	Lakshman Puri.
11	Rashad Sulaiman Kattan.
12	Joseph John Palopu.
13	Mavatur Venkatagiri Gundu Rao.
14	Shafi Bahadur Khan.
15	A. T. Thiaga Rajah.
16	Chowdhuri Mahmood Hasan.
17	Vaman Balwant Soman.
18	Lakshmana Rao Bheema Rao Padaki.
19	Maung Tun Aung Gyaw.
20	Rash Behari Gupta.
21	Hector Charles Perera.
22	Maung Saw Tun.
23	Khondker Matiur Rahman.
24	Chembanda D. Kalapa.
25	Hitendra Nath Chowdhury.
26	Sarat Chandra Maity.
27	Zahir-Ul-Hassan.
28	Kamaluddin Md. Yusuff Khan.
29	Adi Nath Mitra.
30	Mohammad Takiuddin Ahmed.
31	Ruhal Ameen.
32	Vartanzareh Noradungian.
33	Tiruvengad Rama Iyer Ramchandra Iyer.
34	Susil Ranjan Das.
35	Debi Prosad Bhatt.
36	Maung Ba Gywe.
37	Lutfi Tahir-l-Bayati.
38	Supper Kandiah.
39	Yeakub Ali.
40	Bibhuti Bhusan Paul.
41	Amiya Lal Banerjee.

A. D. MACGREGOR, F.R.C.V.S., F.Z.S., I.V.S.,

Principal, Bengal Veterinary College.

Burdwan Division.

Chinsura, the 5th April 1937.

List of successful candidates at the Guru Training Final Examination of 1936.

I indicates First Division.

II indicates Second Division.

Burdwan district.

Katwa G. T. School.

1	Braja Gopal Acherjya	...	I
2	Radhesh Chandra Bhattacharjya	..	I
3	Kartick Chandra Ghosh	...	I
4	Bata Krishna Samanta	...	II
5	Nrisingha Prasad Ghosh	...	I
6	Sudhir Kumar Jash	...	II
7	Saktipada Ghosh	...	II
8	Jitendra Nath Chatterjee	...	II
9	Kalikinkar Chatterjee	...	I
10	Saktipada Samanta	...	II
11	Mritunjoy Kumar Roy	...	II
12	Dharanidhar Baishnab	...	II
13	Birinchi Mohan Choudhury	...	I
14	Saktipada Mandal	...	I
15	Manmathahari Mandal	.	II
16	Baidyanath Chatterjee	...	I
17	Nripendra Nath Bhattacharjee	...	II
18	Birendra Nath Mookherjee	...	I
19	Prafulla Kumar Chatterjee	...	I
20	Md. Abul Kashem	...	II
21	Abdul Bari	...	I
22	Atiar Rahaman	...	II
23	Quazi Hasibul Hossain	...	II
24	Joynal Abedin	...	II
25	Golam Sattar	...	I
26	Siddheswar Mazumdar	...	I
27	Priya Gopal Singha	...	II
28	Darbesh Ali	...	I
29	Mir Muzai Ali	...	II
30	Quazi Kashem Nawaz	...	II
31	Gopal Chandra Sarkar	...	II
32	Mrityunjay Dan	...	II
33	Ramapati Choudhury	...	II
34	Chandipada Misra	...	II
35	Satya Kinkar Roy	...	II
36	Bhujanga Bhusan Chakravarty	...	I
37	Choudhury Fazle Rahaman	...	II
38	Radhagobinda Samanta	...	II
39	Jitendra Nath Samanta	...	II
40	Gour Chandra Chatterjee	...	II

Private.

1	Shaikh Atahar Rahaman	...	II

Burdwan G. T. School.

1	Jugal Chandra Ghosh	...	I
2	Kshetra Nath Rakshit	...	I
3	Panchanan De	...	I
4	Prabhakar Mandal	...	I
5	Kripasindhu Mookherji	...	I
6	Girija Sankar Chatterjee	...	I
7	Bisweswar Guha	...	I
8	Keshabeswar Haldar	...	I
9	Sk. Abdul Murshed	...	I
10	Ramprasad Dan	...	I
11	Md. Abbas Ali	...	II
12	Lalitmohan Ghosh	...	I
13	Anil Kumar Roy	..	I
14	Sripati Charan Kundu	...	II
15	Quazi Abdul Aziz	...	II
16	Syed Fazlul Karim	...	II
17	Bimalendu Sekhar Kowar	..	II
18	Satchidananda Mukherjee	...	I
19	Samsul Huda	...	II
20	Hridayamoy Tah	...	II
21	Gour Chandra Panda	...	I
22	Abedar Rahaman Khan	...	II
23	Kalipada Chakravarty	...	II
24	Shufi Abdus Shakur	..	II
25	Bishnupada Chakravarty	...	II
26	Prafulla Kumar Banerjee	...	II
27	Adhir Kumar Shyam	.	II
28	Khondkar Abdur Rashid	...	II
29	Nishakar Banerjee	...	II
30	Ganapati Pal	...	II
31	Sk. Md. Ayub	...	II
32	Gobardhan Kowar	...	II
33	Md. Nurul Hossain	...	I

Birbhum district.

Suri G. T. School.

1	Anath Nath Pathak	...	I
2	Ayan Chandra Ghosh	...	I
3	Sudhir Chandra Roy	...	I
4	Kalikinkar Mookherjee	...	I
5	Dhwajadhari Mondal	...	I
6	Sankar Chandra Chatterjee	...	I
7	Sudhakar Chatterjee	...	II
8	Bhabesh Chandra Datta	..	I
9	Sudhir Kumar Chatterjee, No. 1	.	I
10	Haripada Bagdi	...	I
11	Quazi Alla Nowaz	...	II
12	Ahi Bhusan Mandal	...	II
13	Azizur Rahaman	...	II
14	Abdul Hakim	...	II
15	Md. Allarakha	...	I
16	Balaram Mandal	...	I
17	Dharmadas Mookherjee	...	II
18	Dukari Garain	...	I
19	Mir Md. Ali	...	II

20	Sarat Chandra Choudhury ...	I
21	Sudhir Kumar Chatterjee, No. 2 ...	I
22	Karuna Sindhu Das ...	I
23	Kalipada Chakravarty ...	I
24	Nalinaksha Choudhury ...	I
25	Jagamohan Das ...	I
26	Kalikinkar Das ...	I
27	Raghunath Nath ...	II
28	Kalachand Chatterjee ...	I
29	Shyamapada Bhandari ...	I
30	Bholanath Mandal ...	I
31	Moulindra Mohan Hazra ...	I
32	Soleman Shaikh ...	II
33	Matur Chandra Haldar ...	I
34	Shaikh Quader Baksh ...	II
35	Bharat Chandra Bagdi ...	II
36	Dhwajadhari Chakravarty ...	I
37	Md. Jabbar Ali ...	II
38	Hafiz Ali Khan ...	II

Private.

1	Dukari Mandal ...	II
2	Abdas Sattar ...	II

Bolpur G. T. School.

1	Golak Nath Das ...	I
2	Shaikh Mazammal Hossain ...	I
3	Tarapada Mazumdar ..	I
4	Santiram Mukherjee ...	II
5	Kamala Kanta Panda ...	I
6	Manmatha Nath Let ...	II
7	Saktipada Chatterjee ...	I
8	Kedar Nath Mandal ...	I
9	Satchidananda Ghosh ..	I
10	Md. A. M. Abul Quashem ..	I
11	Md. Matiar Rahaman .	II
12	Amar Krishna Pal ...	I
13	Dibakar Hazra ...	I
14	Molla Abdul Hai ...	II
15	Ananta Deb Sarkar ...	II
16	Kalidas Mandal ...	II

Nalhati G. T. School.

1	Sambhu Nath Das ...	I
2	Nabanidhar Datta ...	II
3	Ranjit Kumar Singha ...	I
4	Rambrahma Bandyapadhya ...	I
5	Satkari Bandyapadhya ...	I
6	Member Hossain Mondal ...	II
7	Sk. Moharram Ali ...	II
8	Girija Bhusan Ghosh ...	I
9	Kanti Bhusan Mandal ...	II
10	Md. Abu Moshain Shaikh ...	II
11	Radhakanta Gangopadhya ...	I
12	Abdus Sattar ...	II
13	Rampada Pal ...	I
14	Subal Chandra Hansda ...	II

Bankura district.

Bankura G. T. School.

1	Ramananda Chattoraj ...	II
2	Kamalakanta Mondal ...	II
3	Sudhir Chandra Maji ...	II
4	Ramgati Kundu ...	II
5	Basanta Kumar Mandal ...	II
6	Kshudiram Haldar ...	I
7	Guru Pada Mukherjee ...	II
8	Prabhat Ranjan Banerjee ...	II
9	Sasadhar Mookherjee ...	II
10	Bhadra Nath Mahanti ...	II
11	Madan Mohan Ghoshal ...	II
12	Mahendra Nath Das ...	II
13	Madan Mohan Patra ...	II
14	Bhabataran Patra ...	II
15	Pashupati Layek ...	II
16	Haripada Patra ...	II
17	Nityananda Panda ...	II
18	Sashi Bhusan Satpati ...	II
19	Madhusudan Pati ...	II
20	Krishna Chandra Sinha Mahapatra ...	II
21	Harihar Panda ...	II
22	Kali Pada Singa Mahapatra ...	II
23	Haripada Mandal ...	II
24	Karali Charan Banerjee ...	II
25	Narayan Chandra Banerjee ...	II
26	Raghunandan Banerjee ...	II
27	Mathan Lal Mandal ...	I
28	Durgacharan Sarkhal ...	II
29	Dibakar Pratihar ...	II
30	Tripurari De ..	II
31	Bankim Chandra Patra ...	II
32	Binode Behari Hazra ...	II
33	Satish Chandra Pal ...	II
34	Nakul Chandra Panda ...	II
35	Hari Pada Maji ...	II
36	Akul Chandra Chakravarty ...	II
37	Profulla Kumar Nayek ...	II
38	Baidya Nath Nandi ...	II
39	Guiram Sarma ...	II

Bishnupur G. T. School.

1	Nasiruddin Khan ...	II
2	Jadu Nath Patra ...	II
3	Shyama Pada Patra ...	II
4	Suchand Patra ...	II
5	Gangadhar Patra ...	II
6	Indra Narayan Patra ...	I
7	Satish Chandra Biswas ...	II
8	Mahadeb Chandra De ...	II
9	Amulya Ratan Das ...	II
10	Pashupati Ghosh ...	II
11	Renupada Nandi ...	II
12	Bhubaneswar Mandal ...	II
13	Kali Pada Chakravarty ...	II

Sonamukhi G. T. School.

1	Bhuban Mohan Mukherjee ...	II
2	Santosh Kumar Ghosh ...	II
3	Nirode Baran Mandal ...	II
4	Krishna Pada Mahanta ...	II
5	Kamala Kanta De ...	II
6	Bhupati Bhusan Pan ...	II
7	Amulya Ratan Nan ...	II
8	Suresh Chandra Singha ...	II
9	Gobinda Chandra Pal ...	I
10	Pashupati Sanigrahi ...	II
11	Sasadhar Roy ...	II
12	Shyama Pada Majhi ...	II
13	Subal Chandra Mandal ...	II
14	Hari Sankar Roy ...	II
15	Narendra Nath Karmakar ...	II
16	Shah Abdul Ala.	

Private.

1(a)	Abdul Gani Mallik	Passed.
2(a)	Mati Lal Roy	Passed.
3(a)	Adwaita Charan Acharjya	Passed.

(a) These three candidates passed the examination in oral and practical subjects in the previous year and now pass the written portion of the examination and are declared to have passed the examination.

Sarenga G. T. School.

1	Shyamacharan Nandi ...	II
2	Srinath Chandra Saren ...	II
3	Gour Chandra Mahata ...	II
4	Dasarath Mahata ...	II
5	Radhagobinda Mahata ...	II
6	Janakinath Duley ...	II
7	Lakshmi Ram Hembram ...	I

Midnapore district.

Midnapore Central G. T. School.

1	Sakti Pada Mallik ...	I
2	Atul Chandra Pal ...	I
3	Brajendra Nath De ...	II
4	Babu Lal De ...	I
5	Basanta Kumar Bera ...	II
6	Gostha Behari Shaw ...	II
7	Kartick Chandra Pradhan ...	II
8	Girish Chandra De ...	II
9	Debendra Nath Dwari ...	II
10	Kartick Chandra Dalui ...	I
11	Shaikh Kayam Ali ...	II
12	Upendra Nath Jana ...	II
13	Gunadhar Jana ...	II
14	Md. Aftabuddin ...	II
15	Amulya Charan Ray ...	II
16	Girish Chandra Mahapatra ...	II
17	Bankim Chandra Das ...	II
18	Pashupati Samanta ...	II
19	Sarat Chandra Mandal ...	II
20	Tarani Kanta Khatua ...	II
21	Iswar Chandra Manna ...	II

22	Behary Lal Das	...	II
23	Kshirode Behari Giri	...	I
24	Shaikh Ahad Ali	...	II
25	Ram Prasad Maity	...	II
26	Bishnu Pada Das	...	I
27	Ramchandra Das	...	II
28	Gokul Chandra Mandal	...	II
29	Upendra Nath Choudhury	...	II
30	Nishikanta Mal	...	II
31	Gopal Chandra Gayen	...	II
32	Narendra Nath Pradhan	...	II
33	Kshetra Mohan Kuila	...	II
34	Sk. Yakub Mahammad	...	II
35	Gobardhan Maity	...	II
36	Kishori Ranjan Adhikari	...	II
37	Gunadhar Mujrai	...	II

Garbeta G. T. School.

1	Surjya Kumar Sahoo	...	II
2	Jatindra Nath Rana	...	II
3	Rupchand Chakravarty	...	II
4	Bhairab Chandra Karak	...	II
5	Makham Chandra Kundu	...	II
6	Narayan Chandra Nayek	...	II
7	Sital Prasad Mazumdar	...	II
8	Chandra Sekhar Mahata	...	II
9	Charu Chandra Choudhury	...	II
10	Jajneswar Das	...	II
11	Mahendra Nath Mandal	...	II
12	Bhabatosh Ghosh	..	II
13	Bishnupada Pradhan	..	II
14	Girija Bhusan Mahata	...	II
15	Amulya Charan Samanta	...	II

Nimtala G. T. School.

1	Ashutosh Hazra	...	II
2	Kali Pada Paria	...	I
3	Abinash Chandra Das	...	II
4	Binode Behary Dhara	...	II
5	Radhanath Patra	...	II
6	Harekrishna Pal	...	II
7	Atul Chandra Ghosh	...	II
8	Basudeb Chandra Adak	...	I
9	Ekadashi Manna	...	II
10	Bhola Nath Das	...	II
11	Gopal Chandra Bhunia	...	II
12	Ram Krishna Bera	...	I
13	Panchanon Maity	...	II
14	Gaya Prasad De	...	II
15	Haro Krishna Maity	...	II
16	Ram Kinkar Choudhury	...	II

Private.

1	Krishna Mohan Mondal	...	II

Tamluk G. T. School.

1	Bhabadeb Sana	...	I
2	Manindra Krishna Bhakta	...	I
3	Ambika Charan Bash	...	I
4	Iswar Chandra Sahoo	...	II
5	Satyaban Bera	...	II
6	Bishnuhari Pattanaik	...	II
7	Bhajahari Ghorai	...	II
8	Mrityunjoy Shee	...	II
9	Panchanon Ghata	...	I
10	Dibakar Khatua	...	I
11	Nakuleswar Gayen	...	I
12	Bijoy Krishna Santra	...	II
13	Brahmapada Das	...	II
14	Gobinda Chandra Maity	...	II
15	Satish Chandra Das	...	II
16	Krittibas Paik	...	I
17	Nisha Kanta Panda	...	II
18	Paresh Chandra Khatua	...	I
19	Bhusan Chandra Mandal	...	II
20	Nityagopal Das	...	II
21	Atul Krishna Pal	...	I
22	Gostha Behari Panda	...	I
23	Raj Krishna Gantait	...	I
24	Manaranjan Midda	...	II
25	Jatindra Nath Bera	...	II
26	Sudha Krishna Hazra	...	II
27	Sripati Charan Mandal	...	II
28	Jogendra Nath Pramanik	...	II
29	Harekrishna Mandal	...	II
30	Bihari Lall Das	...	II
31	Pulin Chandra Manna	...	II
32	Jnanada Charan Bhanja	...	II
33	Byomkesh Chandra Jana	...	II
34	Suresh Chandra Jana	...	II

Amarshi G. T. School.

1	Surendra Nath Chanda		I
2	Manindra Nath Datta	...	I
3	Bhuban Mohan Das	...	I
4	Kali Pada Ghosh	...	I
5	Satish Chandra Hazra	.	I
6	Trailokya Nath Jana	..	II
7	Rajani Kanta Kar	.	I
8	Brindaban Maity		I
9	Sudhindra Krishna Maity	.	I
10	Nani Gopal Maity	.	I
11	Bepin Behari Maity	..	I
12	Narasingha Mahapatra	..	I
13	Murarimohan Pradhan	...	I
14	Gaya Prasad Panda	..	I
15	Sudhir Kumar Pahan	...	I
16	Nityananda Pradhan		I

Private.

1	Hara Prasad Das	...	I

Hooghly district.

Goghat G. T. School.

1	Panchanon Mandal	.	I
2	Amarendra Nath Roy		I
3	Bhabataran Roy	...	II
4	Gopinath De	...	I
5	Ramgati Mandal	...	I
6	Probodh Kumar Ghosh	..	II
7	Surya Sadhan Palui	.	I
8	Bholanath Bhattacharjya		II
9	Hari Sadhan Bandyapadhya	..	II
10	Manmatha Nath Sarbabhom	..	I
11	Sahadeb Chakravarty	..	I
12	Siddheswar Chakravarty	...	II
13	Kalipada Mukhopadhya	...	II
14	Dhirendra Nath Mazumdar	...	I
15	Shaikh Idul Bari		II

Private.

1	Harisadhan Das Bhanja	..	II

Ilsoba G. T. School.

1	Radhanath Pal	...	II
2	Nripendra Nath Das	...	II
3	Manmatha Nath Ghosh	..	II
4	Raj Krishna Chottopadhya	...	II
5	Mahadeb Choudhury	...	II
6	Satish Chandra Sadhu Khan	...	I
7	Gadhadhar Pal	...	II
8	Bibhuti Bhusan Sur	...	II
9	Nrityagopal Chakravarty	...	II
10	Shaikh Abu Syed	...	II
11	Sadhan Chandra Maity	...	II
12	Hrishikesh Harabagish	...	I
13	Gopal Chandra Ghosh	...	II
14	Babu Ram Pal	...	II

Nalikul G. T. School.

1	Saradindu Mukherjee	...	I
2	Barun Chandra Chattopadhya	...	I
3	Jamini Kanta Kumar	...	I
4	Ranajit Sinha Roy	...	II
5	Bishnupada Roy	...	I
6	Satyacharan Das	...	II
7	Kalipada Sarkar	...	II
8	Bansibadan Roy	...	II
9	Rampada Ghosh	...	II
10	Maniruddin Talukdar	...	II
11	Sailendra Nath Roy	...	II
12	Satya Charan Chakravarty	...	II
13	Pashupati Mandal	...	I
14	Ram Kinkar Roy	...	II
15	Prakesh Chandra Adak	...	II

Private.

1	Balai Chandra Pal	...	II
2	Rajani Kanta Maji	...	II
3	Sambhunath Bandyopadhya	...	II
4	Padmalochan Roy Choudhury	...	II

Howrah district.

Amtala G. T. School.

1	Nanda Lal Datta	...	I
2	Shital Prasad Ghosh	...	II
3	Kanai Lal Maity	...	II
4	Manowar Hossain	...	II
5	Gunaranjan Chakravarty	...	II
6	Surjya Kumar Panda	...	I
7	Hrishikesh Chakravarty	...	I
8	Manmohan Chatterjee	...	II
9	Bhupal Chandra Khatua	...	I
10	Md. Sirajul Haque	...	II
11	Nityananda Chakravarty	...	I
12	Sudhansu Chakravarty	...	II
13	Jatindra Nath Chakravarty	...	II
14	Md. Mahabbat Ali	...	I
15	Krishna Chandra Maity	...	I
16	Prafulla Chandra Karati	...	I
17	Bibhuti Bhusan Goal	...	I
18	Satish Chandra Maity	...	I
19	Sufal Chandra Panja	...	I
20	Rajaram Chakravarty	...	I
21	Kanai Lal Hazra	...	I
22	Aftabuddin Bhunia	...	II
23	Afsaruddin Ahmed	...	II
24	Ardhendu Sekhor Biswas	...	II
25	Shyama Sankar Roy	...	II
26	Santosh Kumar Jana	...	II
27	Santosh Kumar Chatterjee	...	I
28	Upendra Nath Pal	...	I
29	Probodh Chandra Bera	...	II
30	Satya Kinkar Ghoshal	...	II
31	Md. Gholam Rabbani	...	I
32	Prabhash Chandra Samanta	...	I
33	David Patra	...	II
34	Gosta Behari Sahu	...	I
35	Md. Abdul Haque	...	II
36	Sk. Roostam Ali	...	II
37	Surendra Nath Chakravarty	...	II
38	Mahananda Mandal	...	II
39	Anil Kumar Bhattacharjee	...	II
40	Aswini Kumar Manna	...	I

P. C. MUKHERJI,

Inspector of Schools, Burdwan Division.

Burdwan Division.

Chinsura, the 5th April 1937.

List of successful candidates at the Muallim Training Final Examination of 1936.

I indicates First Division.

II indicates Second Division.

Hooghly M. T. School.

1	Sk. Dalilur Rahaman	...	II
2	Sk. Abdul Quader	...	II
3	Sk. Kansar Ali	...	II
4	Md. Kabeluddin	...	II
5	Md. Abdul Hamid	...	II
6	Md. Obaidullah	...	II
7	Abdur Rahim	...	II
8	Md. Aminullah	...	II
9	Abdus Sattar	...	II
10	Md. Bazlur Rahman	...	II
11	Md. Tahur Ali	...	II
12	Md. Zahur Ali	...	II
13	Quazi Bazhesh Shukur	...	I
14	Md. Mahiuddin	...	II
15	Md. Serajul Haque	...	II
16	Akbar Hossain	...	II
17	Md. Abu Bakre	...	II
18	Sk. Kobad Ali	...	II
19	Mallik Abdul Hakim	...	II
20	Shaikh Mansoor Ali	...	II
21	Md. Insan Ali	...	II
22	Md. Babar Ali	...	II
23	Md. Habidullah (1)	...	II
24	Md. Tamkeen	...	II
25	T. H. Md. Elias	...	II
26	Khondakar Abdul Jobbar	...	II
27	Shaikh Keramat Ali	...	II
28	Fazlul Haque Mian	...	II
29	Abdul Wahab	...	II
30	Mahbubar Rahaman	...	II
31	Md. Hedaitullah	...	II
32	Abdul Haque Khan	...	II
33	Md. Abu Syeed	...	II

Private.

1	Sayeed Ali Hossain	...	II
2	Abdul Mayeed	...	II

P. C. MUKHERJI,

Inspector of Schools, Burdwan Division.

Presidency Division.

Calcutta, the 1st April 1937.

Results of the Final Guru Training and Muallim Training Examinations, 1936-37, in the Presidency Division.

24-Parganas.

Jadavpur Guru Training School.

1 Satish Chandra Naskar.
2 Md. Abdul Khaleque.
3 Upendranath Ghosh.
4 Amulya Ratan Ghosh.
5 Gostha Behari Mondal.
6 Md. Akkas Ali Miah.
7 Baidyanath Takur.
8 Sheik Golam Rahman.
9 Manmathanath Chatterji.
10 Md. Serajul Islam.
11 Md. Abdul Gani,
12 Sarat Chandra Haldar.
13 Trisulpani Sandhi Bigrahi.
14 Nalini Kanta Bal.

Diamond Harbour Guru Training School.

15 Palan Chandra Jana.
16 Md. Sultan Ozzaman.
17 Rabindra Nath Barik.
18 Niranjan Khanra.
19 Nanilal Mondal.
20 Pashupati Bhattacherjee.
21 Brajendra Nath Das.
22 Bhupendra Nath Koyal.
23 Satish Chandra Naskar.
24 Bhabani Charan Parui.
25 Jnanendranath Gain.
26 Satyendranath Purkait.
27 Sudhir Chandra Sapui.
28 Arabinda Laha.
29 Md. Tahar Ali.

Jaynagar Guru Training School.

30 Habibar Rahman Laskar.
31 Dhirendra Nath Datta.
32 Felaram Haldar.
33 Amrita Lal Rong.
34 Golam Hossain Khan.
35 Sashibhusan Haldar.
36 Ayen Ali Haldar.
37 Santosh Kumar Haldar.
38 Pashupati Mondal.
39 Kshirod Chandra Paik.
40 Harekrishna Haldar.
41 Nasiruddin Ahmed.
42 Md. Nurul Azim.
43 Pulin Behari Mukerji.
44 Mahim Chandra Haldar.

Kulpi Guru Training School.

45 Krishna Pada Haldar.
46 Kala Sashi Naskar.
47 Jatish Chandra Haldar.
48 Amulya Chandra Mondal.
49 Sridhar Chandra Deke.
50 Kshetra Mohan Naskar.
51 Kanailal Mondal.
52 Md. Abdul Gafur Mian.
53 Syed Yeakub Ali.
54 Samiruddin Ahmed.
55 Nirapada Mondal.
56 Atul Krishna Haldar.
57 Nalini Kanta Mal.
58 Sheik Wazed Ali.
59 Abhimanoo Naskar.

Baraset Guru Training School.

60 Panchugopal Ghosh.
61 Khagendra Nath Banerji.
62 Bhupendra Nath Bose.
63 Bimalendu Mandal.
64 Upendra Nath Mondal.
65 Atul Krishna Mondal.
66 Abdul Karim Mondal.
67 Sheik Ayzer Rahman.
68 Nibaran Chandra Ghosh.
69 Md. Abdur Rahim.
70 Sheik Osman Ali.
71 Sheik Habibar Rahman.
72 Md. Mobarak Ali Molla.
73 Hiralal Haldar.
74 Jogendra Nath Pal.

Iswarigachha Guru Training School.

75 Gostha Behari Pramanik.
76 Md. Moslem Ali.
77 Md. Golam Sattar.
78 Basudeb Adhikari.
79 Md. Ebadat Ali.
80 Said Ali Mohsin.
81 Kalipada Haldar.
82 Gopal Chandra Mondal.
83 Phanibhusan Mondal.
84 Nagendra Nath Das.
85 Md. Akbar Ali.
86 Abdul Khaleque Haldar.
87 Purna Chandra Maitra.
88 Md. Ashraf Ali.

Basirhat Guru Training School.

89 Nemai Chandra Chakravarti.
90 Fanindra Nath Bose.
91 Md. Abdul Aziz.
92 Hriday Krishna Jana.
93 Sudhir Krishna Bhattacherji.
94 Kalidas Banerji.
95 Md. Tarif.
96 Md. Akbar Ali.
97 Munshi Ali Ahmed.
98 Sheik Mustafar Rahman.
99 Sukumar Goldar.
100 Abhimanoo Baidya.
101 Jatindra Nath Mitra.

Private candidates.

Basirhat Guru Training School.

P102 Said Raisuddin Ahmed.

Jadavpur Guru Training School.

P103 Md. Nurul Hossain.

Jaynagar Guru Training School.

P104 Karim Buksh Khan.
P105 Dwarikanath Bairagi.

Muallim Training candidates.

Banspole Muallim Training School.

1 Md. Jobed Ali.
2 Md. Keramat Ali.
3 Md. Faizuddin.
4 Md. Abdur Razzaque Shahji.
5 Md. Nazmul Haque.
6 Abu Sayed Nesar Ahmed.
7 Md. Umed Ali.
8 Md. Manir Hussain.
9 Maulvi Md. Jamayet Ali.
10 Md. Anwar Hossain.
11 Md. Mujibar Rahman.

Nadia.

Krishnagar Guru Training School.

1 Balaram Acharyya.
2 Akkas Ali.
3 Sudhanshu Shekhar Biswas.
4 Nirmal Kumar Biswas.
5 Khagendra Nath Biswas.
6 Tenajuddin Biswas.
7 Abdur Rahman Biswas.
8 Bireswar Brahma.
9 Santiswar Brahma.
10 Jagannath Chakravorty.
11 Suresh Chandra Chatterjee.
12 Umasankar Das.
13 Nanda Kumar Das.
14 Kanailal De.
15 Ajit Kumar De.
16 Fakir Ahmed.
17 Mahit Kumar Ganguli.
18 Baidya Nath Ghosh.
19 Gakul Chandra Ghosh.
20 Satya Narayan Ghosh.
21 Bishnu Pada Goswami.
22 Abdul Hakim Khan.
23 Taheruddin Mallik.
24 Akbar Ali Mandal.
25 Mir Ekramul Huq.
26 Muhammad Hasrat Ali.
27 Muhammad Abdus Sattar.
28 Muhammad Samsul Huda.
29 Muhammad Taffazal Hossain.
30 Samiruddin Ahmed.
31 Samsuddin Ahmed, No. I.
32 Samsuddin Ahmed, No. II.
33 Shaikh Ismail.
34 Sudhindra Kumar Sarkar.
35 Abdul Gaffar Sarkar.
36 Santosh Kumar Basu.
37 Muhammad Ekramul Huq.

Debagram Guru Training School.

38 Dharmadas Maitra.
39 Muhammad Akbar Ali Shaikh.
40 Muhammad Maqshed Ali.
41 Muhammad Atiar Rahman.
42 Shaikh Afazuddin.
43 Lokenath Nath.
44 Shaikh Abdul Gani.
45 Jonab Ali Pramanik.
46 Dhanapati Mandal.
47 Khudiram Mandal.

Palashipara Guru Training School.

48 Dhirendra Nath Biswas.
49 Narendra Nath Bhowmik.
50 Hazari Lal Biswas.
51 Abdul Hossain Mandal.
52 Muhammad Azizullah.
53 Muhammad Abdul Hakim.
54 Bishnupada Adhikari.
55 Aftabuddin Khan.
56 Bisweswar Chatterjee.
57 Upendra Mohan Chatterjee.
58 Muhammad Panjab Ali Mollah.

Hatchapra Guru Training School.

59 Niranjan Kumar Mandal.
60 Amarendra Nath Bogi.
61 Nathaniel Mullik.
62 Nepal Chandra Saha.
63 Lakshman Chandra Konai.
64 Chapetali Mandal.
65 Kaliram Murmu.
66 Jyotirindra Kumar Hazra.
67 Sudhir Kumar Sarkar, No. I.
68 Sudhir Kumar Sarkar, No. II.
69 Jagatjyati Khan.
70 Jotindra Nath Patra.

Majdia Railbazar H. E. School centre.

Krishnagar Guru Training School.

1 Anukul Chandra Chakraverty.
2 Rampada Biswas.
3 Gabinda Charan Chakraverty.
4 Aswini Kumar Mukhopadhyaya.
5 Hiranmay Biswas.
6 Monomohan Das.
7 Muhammad Mahshin Ali Mian.
8 Samsuddin Mian.
9 Muhammad Ramjan Ali Mallik.

Rathnagar Guru Training School.

10 Karim Buksh Mandal.
11 Mir Muhammad Haider Ali.
12 Hafizuddin Ahmed.
13 Khalilar Rahman.
14 Kali Pada Bhattacharjee.
15 Nitya Gopal Karmakar.
16 Ram Narayan Biswas.
17 Haripada Chakraverty.
18 Brindaban Chandra Sarkar.
19 Muhammad Ali Mandal.
20 Tahiruddin Mandal.
21 Ebadat Ali Mirza.

Kamalpur Guru Training School.

22 Muhammad Nuruddin Mian.
23 Muhammad Abdul Gaffar.
24 Bibhuti Bhusan Chakraverty.
25 Baidyanath Pal.
26 Abdul Wahed Mian.
27 Karamali Biswas.
28 Muhammad Ali Biswas.
29 Benoy Bhusan Das.
30 Munshi Maziruddin Ahmed.
31 Muhammad Nader Hossain Mian.
32 Brajendra Nath Biswas.
33 Muhammad Abdul Karim.
34 Haran Chandra Nath.

Private candidate.

P1 Muhammad Rahatullah Mandal.

Murshidabad.

Berhampur Improved Type Guru Training School.

1 Sasanka Sekhar Mondal.
2 Girijakanta Bhattacharjee.
3 Satyendra Narayan Ghatak.
4 Jagat Bandhu Saha.
5 Prafulla Kumar Dutt.
6 Balaram Karmakar.
7 Hakikat Shaikh.
8 Kashinath Ghose.
9 Narendra Nath Pramanik.
10 Balaram Sarkar.
11 Susanta Kumar Sarkar.
12 Gopinath Mondal.
13 Aswini Kumar Paikar.
14 Gour Gopal Acharjee.
15 Azizul Huq.
16 Muhammad Abdul Majid Biswas.
17 Muhammad Amjad Hossain.
18 Muhammad Jillar Rahman.
19 Shaikh Besarat Hossain.
20 Muhammad Khater Molla.
21 Muhammad Abdulla.
22 Muhammad Kayem Ali Biswas.
23 Idris Hossain Molla.
24 Subal Chandra Doy.
25 Bholanath Chatterjee.
26 Muhammad Badruddin.
27 Arjun Chandra Mistri.
28 Muhammad Samsuddin.
29 Muhammad Abdul Huq Biswas.
30 Muhammad Erfan Mian.
31 Esaruddin Ahmed.
32 Wajed Ali.
33 Muhammad Benode Ali Shaikh.
34 Nrisingha Prasad Mondal.
35 Muhammad Asiruddin.
36 Monazzem Hossain.
37 Kalipada Haldar.
38 Fazle Karim.

Kandi Guru Training School.

39 Manas Chandra Chakraberty.
40 Shibaram Banerjee.
41 Bhujanga Bhushan Adhikari.
42 Monindra Bhushan Pal.
43 Sankarshan Ghose.
44 Durgadas Nath.
45 Anandagopal Pal.
46 Dharanidhar Das.
47 Syed Zaker Ali.
48 Amir Hossain.
49 Muhammad Jerafat.
50 Serafatulla.

Monigram Guru Training School.

51 Azizulla Karikar.
52 Muhammad Abdus Samad.
53 Muhammad Hemajuddin.
54 Kamalakanta Mondal.
55 Ranaprabir Burmon.
56 Subodh Chandra Roy.
57 Muhammad Faizuddin.
58 Monindra Kumar Chattopadhyaya.
59 Panchkari Roy.
60 Bhujanga Bhushan Sarkar.
61 Muhammad Farizuddin.
62 Meghnath Das.
63 Setaruddin Biswas.
64 Muhammad Afsar Ali.

Malihati Guru Training School.

65 Shaikh Abdul Latif.
66 Sashanka Sekhar Ghose.
67 Pashupati Mondal.
68 Muhammad Yashin.
69 Tinkari Saha.
70 Esaruddin Ahmed.
71 Muhammad Fazley Rabbi.

Pratapganj Guru Training School.

72 Lalmohammad Biswas.
73 Nurul Hoda.
74 Mohes Chandra Mondal.
75 Matilal Roy.
76 Kalia Sundar Adhikari.
77 Benoy Kumar Sarkar.
78 Rustom Ali.
79 Wazed Ali.
80 Momiruddin Ahmed.
81 Shaikh Bahar Ali.
82 Nilmoni Das.
83 Mohini Mohan Sarkar.
84 Mozammel Huq.

Private candidates.

P1 Suryakanta Chattopadhyaya.
P2 Samiruddin Mondal.
P3 Shaikh Kalimuddin Ahmed.

Jessore.

Jessore Guru Training School.

1 Jagatbandhu Sinha.
2 Amulya Kumar Saha.
3 Badaruddin Ahmad.
4 Shamsuddin Ahmad.
5 Muhammad Arman Ali.

6 Nikunja Behari Biswas.
7 Sudhir Kumar Datta.
8 Kamala Kanta Chakraverty.
9 Raisuddin Ahmad.
10 Khagendra Nath Ghosh.
11 Muhammad Batek Ali.
12 Shyamapada Biswas.
13 Muhammad Ershad Ali.
14 Muhammad Velayet Husain.
15 Santosh Kumar Dhar.
16 Ramendra Nath Sinha.
17 Nirmal Kanta De.
18 Bejoy Krishna Halder.
19 Sarat Chandra Sarker.
20 Sankar Kumar Bhowmic.
21 Sheikh Muhammad Matiullah.
22 Quazi Abdul Wahed.
23 Gazi Azharul Huq.
24 Muhammad Fasiar Rahman Sikder.
25 Muhammad Esmail Husain.
26 Bepin Behari Paul.
27 Muhammad Abdul Hamid Mian.
28 Abu Shams Md. Rahim Bux.
29 Pear Ahmad.
30 Muhammad Alauddin Biswas.
31 Muhammad Mukhtar Ali.
32 Munshi Muhammad Sabdar Husain.
33 Muhammad Azizar Rahman.
34 Santosh Kumar Biswas.
35 Hiralall Chakraverty.
36 Sudhir Kumar Raha.
37 Bepin Behari Ray.
38 Phani Bhusan Ray.

Magura Guru Training School.

39 Khagendra Nath Ray.
40 Munshi Shamsul Bari.
41 Devendra Nath Bhowmic.
42 Dhirendra Nath Ghose.
43 Khan Shamser Ali.
44 Charu Chandra Paul.
45 Abdul Malek.
46 Ghulam Quaosar Molla.
47 Narendra Nath Datta.
48 Suresh Chandra Ray.
49 Muhammad Abdur Razzaque Miah.
50 Muhammad Shafiul Huq Biswas.

Umedpur Guru Training School.

51 Muhammad Obed Ali.
52 Nader Chand Paul.
53 Prafulla Kumar Mallik.
54 Naziruddin Ahmad.
55 Anil Kumar Datta.
56 Haran Chandra Podder.
57 Munshi Jalaluddin Ahmad.
58 Gonesh Chandra Chandra.
59 Quazi Abdus Samad.
60 Harendra Nath Mitra.
61 Muhammad Syed Ali Molla.
62 and 63 Muhammad Jinnat Ali.

Rupganj Guru Training School.

64 Matilal Rajbansi.
65 Bhagya Dhar Podder.
66 Keshab Lal Ghatak.
67 Muhammad Serajul Huq.
68 Durgadas Rajak.
69 Kshirod Behari Ghosh.
70 Muhammad Badruddoza.
71 Modaswer Husain Sikder.
72 Bireswar Biswas.
73 Abual Hamid.
74 Syed Bazlur Rahman.
75 Azizul Huq.

Mohanpur Guru Training School.

76 Muhammad Abdul Mutleb.
77 Kalipada Karmaker.
78 Krishna Mohan Bose.
79 Jogendra Nath Ray.
80 Nani Gopal Malakar.
81 Muhammad Bhajan Sana.
82 Muhammad Ershad Ali Biswas.
83 Muhammad Umed Ali.
84 Muhammad Abdur Rauf.
85 Tarapada Biswas.
86 Muhammad Sheikh Gouhar Ali.
87 Probodh Kumar Ghosh.
88 Muhammad Gouhar Ali Daftary.

Ghatbaor Guru Training School.

89 Jagat Bandhu Bhattacherji.
90 Joy Gopal Chakraverty.
91 Arun Chandra Ghoshal.
92 Abdul Wajed Khan.
93 Muhammad Hamidar Rahman Khan
94 Ramani Mohan Mukherji.
95 Anil Kumar Mallik.
96 Abdul Ghafur Mondal.
97 Muhammad Lutfar Rahman.
98 Talebali Mondal.
99 Balaram Sinha.
100 Surendra Nath Sinha.
101 Muhammad Ishaq Sarder.
102 Sitanath Mukherji.

Noapara Muallim Training School.

103 Muhammad Ershad Ali.
104 Muhammad Anwarul Huq.
105 Muhammad Moslem.
106 Muhammad Jahantapuddin.
107 Muhammad Shariatullah.
108 Muhammad Ershadullah.
109 Muhammad Ruhul Huq.
110 Muhammad Adiluddin Khan.
111 Abu Nasr Muhammad Emanuddin.
112 Muhammad Wayezuddin.
113 A. K. M. Sayemuddin.

Private candidates.

Guru Training School.

P1 Muhammad Sayedur Rahman.
P2 Ghulam Muktader Molla.
P3 Kalidas Mitra.
P4 Moslehuddin.

Muallim Training School.

P5 Muhammad Eshaq.

Khulna.

Khulna Guru Training School.

1 Santosh Kumar Mukherjee.
2 Anil Chandra Ghosh.
3 Panchanan Mukherjee.
4 Ashutosh Biswas.
5 Rashik Lal Khan.
6 Gopal Chandra Sarkar.
7 Azimuddin Ahmad.
8 Md. Kashrur Rahman.
9 Syeduddin Jamadar.
10 Md. Mobarak Ali.
11 Shaikh Syedar Rahman.
12 Md. Nowsher Ali.
13 Shaikh Abdul Maleque.
14 Bimal Lal Sarkar.
15 Sudhir Krishna Basu.
16 Shambhu Nath Chatterjee.
17 Suresh Chandra Biswas.
18 Hiralal Roy.
19 Sushil Kumar Chakraverty.
20 Mia Md. Syedur Rahman.
21 Md. Sham Ali Sardar.
22 Md. Wazed Ali.
23 Jasimuddin Ahmad.
24 Md. Abbas Ali Mullah.
25 Siva Pada Nath.
26 Nalini Ranjan Majumdar.
27 Panchkowri Mondal.
28 Md. Jinnat Ali.
29 Kazi Md. Matiar Rahman.
30 Shaikh Moktader Rahman.
31 Md. Atiar Rahman.
32 Md. Shaikh Samsuddin.
33 Profulla Kumar Mukherjee.
34 Jogendra Nath Das.
35 Protap Chandra Mukherjee.
36 Doyal Chandra Sarkar.
37 Abdul Ghani Akan.

Raripara Guru Training School.

38 Dina Bandhu Debnath.
39 Md. Samsur Rahman.
40 Panchanan Mondal.
41 Ganesh Chandra Das.
42 Md. Ajahar Ali Joardar.
43 Bimalendu Roy.
44 Dwijendra Lal Sarkar.
45 Noor Muhammad Mallik.
46 Mauzudl Huq.
47 Wookiluddin Ahmad.
48 Sisir Kumar Mondal.
49 Md. Ohazuddin.

Kalsroa Guru Training School.

50 Krishna Pada Basu.
51 Tarak Das Ganguli.
52 Benoy Krishna Bhattacherjee.
53 Nritya Gopal Majumdar.
54 Amulya Krishna Roy.
55 Nirapada Biswas.
56 Bharat Chandra Mondal.
57 Md. Ibrahim.
58 Mir Shahabaz Ali.
59 Syed Amir Ali.
60 Quazi Shartul Bari.

Bagerhat Muallim Training School.

61 Md. Samiruddin.
62 Md. Sahob Ali.
63 Abdul Latif.
64 Md. Ismail Hossain.
65 Mollah Abdus Samad.
66 Tofazuddin Shaikh.
67 Samiruddin Ahmad.

Private candidates.

P1 Biraj Mohon Mallik.
P2 Md. Kasem Ali Howladar.
P3 Md. Abdul Gaffur.
P4 Hatem Ahmad Khan.
P5 Shaikh Anwar Hossain.

M. A. JAAFAR,
Inspector of Schools, Presidency Division.

Orders by the Vice-Chancellor and Syndicate of the Calcutta University.

NOTICE.

Senate House, Calcutta, the 7th April 1937.

The undermentioned candidate is admitted to the degree of Master of Obstetrics. The subject of his thesis is also stated below. His thesis having been commended, he was admitted to and passed the Written, Oral, Practical and Clinical examinations held in March 1937, in connection with the above degree:—

Nimaikrishna Bandyopadhyay.

Subject of thesis.

"Anaemia of Pregnancy."

B. B. DUTT,
Controller of Examinations.

Orders by the Vice-Chancellor and Syndicate of the Calcutta University.

NOTICE.

Senate House, the 5th April 1937.

The undermentioned candidate is admitted to the degree of Doctor of Science. The subject of his thesis submitted to and approved by the Board of Examiners is also stated below:—

Nripendranath Chattopadhyay.

Subject of thesis.

"Synthesis of Phenanthrene and its Derivatives, spiro-Compounds and Synthesis of different types of Ring Systems related to Natural Products" and subsidiary papers on "Studies in the anthraquinone series. Synthesis of 1:6-Dihydroxy and 1:7 Dihydroxy-3-methyl anthraquinone and Synthesis of Purine Derivatives from Glyoxalines."

B. B. DUTT,
Controller of Examinations.

Jack Memorial Scholarship.

Barisal, the 6th April 1937.

NOTIFICATION No. 1797J.

Subject to the usual condition of good conduct and satisfactory progress, three scholarships of Rs. 20 (twenty) only each a month from the Jack Memorial Scholarship Fund are awarded to the students named below for one year with effect from 1st July 1936:—

1. Babu Debabrata Ghosh Dastidar of Post Graduate class—Economics—6th year class of Calcutta University.
2. Babu Benoyendra Nath Rai Choudhury of Post Graduate class—Economics—5th year class of Calcutta University.
3. Babu Pratul Chandra Das Gupta of Post Graduate class—Economics—5th year class of Calcutta University.

The scholarships are tenable at the Calcutta University where the holders of the scholarships are now attending the M.A. class in Economics.

It shall be optional for the committee of management of the Jack Memorial Scholarship Fund to cancel a scholarship at any time on their being satisfied that the holder of the scholarship has not been deriving full benefit therefrom.

H. TUFNELL-BARRETT,
District Magistrate of Bakarganj and Member of the Managing Committee.

Registered No. C207

The Calcutta Gazette

THURSDAY, APRIL 15, 1937.

PART II

Advertisements.

Notices.

Advertisements, Notices, etc., intended for insertion in this part of the Gazette must be sent to Press before 12 noon on Saturday, and all costs deposited and proofs returned by 4 p.m. on Monday. Manuscripts and postal remittances must be addressed to Superintendent, Government Printing (Publication Branch), Bengal Government Press, Alipore.

For the convenience of advertisers located in Calcutta, arrangements have been made to accept advertisements and prepayment of charges at Sales Office, Ground Floor, Writers' Buildings, Calcutta. The latest time for receipt of advertisements for current week's Gazette has been extended till 4 p.m. on Mondays.

Land Sale Notices.

FORM 27.

Advertisement of sale.

NOTICE is hereby given that the undermentioned plots of land, no longer required by Government situated along the East Indian Railway, in the district of Burdwan will be put up to sale at 11 o'clock on the 1st June 1937 at the Special Land Acquisition Office, Burdwan.

The purchasers of the several plots of land will be subject to the following conditions :—

1st.—The purchasers will have no power to make any excavations on the land nearer than fifteen feet from the railway boundary or to plough the land nearer than three feet from the same.

2nd.—If the amount of purchase-money does not exceed Rs. 100, the whole amount must be paid down at once.

3rd.—If the amount of purchase-money exceeds Rs. 100, one-fourth of the amount must be immediately deposited. If the balance be not paid by noon of the fifteenth day after the sale, reckoning the day of sale as one, or if that day be a close holiday, then by noon of the first succeeding office day, the sale shall be cancelled, the sum deposited being forfeited to Government and the lot again put up for sale at the risk of the defaulting purchaser, after issue of advertisement, as in the case of original sale.

4th.—The plots of land will be sold revenue free to the highest bidders.

5th.—The sale will become final on receipt by the Collector of the orders of the Commissioner confirming it, and a regular conveyance will then be granted to the purchaser.

Consecutive lot No.	Name of district.	Pargana and mauza.	Number of mile on which land is situate.	Situated on which side of the railway.	Approximate area of lot in acres and decimals.	Land excluded from sale from each lot.		Commencement and termination of lot.	Boundary of lot or number of cadastral survey plot.
						Reasons for exclusion.	Acres and decimals.		
1	2	3	4	5	6	7		8	9
1	Burdwan	Pargana Burdwan, mauza Bahir-Sarbamangala in police-station Burdwan.	68	North-east of East Indian Railway.	3·06	..	..	Chainage 267 to chainage 573.	The cadastral survey plot Nos. 834 and 835, and parts of cadastral survey plot Nos. 831-833, 836 and 857.

Burdwan, the 6th April 1937.

S. DUTT, *Collector.*

FORM 27.

Advertisement of sale.

NOTICE is hereby given that the undermentioned plots of land, no longer required by Government situated along the East Indian Railway, in the district of Burdwan will be put up to sale at 9 o'clock on the 5th of June 1937 at Asansol Dak Bungalow.

The purchasers of the several plots of land will be subject to the following conditions :—

1st.—The purchasers will have no power to make any excavations on the land nearer than fifteen feet from the railway boundary or to plough the land nearer than three feet from the same.

2nd.—If the amount of purchase-money does not exceed Rs. 100, the whole amount must be paid down at once.

3rd.—If the amount of purchase-money exceeds Rs. 100, one-fourth of the amount must be immediately deposited. If the balance be not paid by noon of the fifteenth day after the sale, reckoning the day of sale as one, or if that day be a close holiday, then by noon of the first succeeding office day, the sale shall be cancelled, the sum deposited being forfeited to Government and the lot again put up for sale at the risk of the defaulting purchaser, after issue of advertisement, as in the case of original sale.

4th.—The plots of land will be sold revenue free to the highest bidders.

5th.—The sale will become final on receipt by the Collector of the orders of the Commissioner confirming it, and a regular conveyance will then be granted to the purchaser.

Consecutive lot No.	Name of district.	Pargana and mauza.	Number of mile on which land is situate.	Situated on which side of the railway.	Approximate area of lot in acres and decimals.	Land excluded from sale from each lot.		Commencement and termination of lot.	Boundary of lot or number of cadastral survey plot.
						Reasons for exclusion.	Acres and decimals.		
1	2	3	4	5	6	7		8	9
1	Burdwan	Pargana Pandra, mauza Banagoria, police-station Salanpur.	1	..	1·11	..	..	Chainage 1,200 to chainage 23·65.	Part of cadastral survey plot No. 62 in mauza Banagoria.
2	Do. ..	Pargana Pandra, mauzas Benagoria and Rangameta, police-station Salanpur.	1	..	2·02	..	..	Chainage 24 05 to chainage 52·80.	Part of cadastral survey plot No. 6 in mauza Benagoria and cadastral survey plot No. 642 and part of cadastral survey plot No. 568 in mauza Rangameta.
3	Do. ..	Pargana Pandra, mauzas Rangameta, Kukurkoonda, Dabor, Monohara, Paharpur and Achhra, police-station Salanpur.	2-4	..	14·15	..	..	..	Part of cadastral survey plots Nos. 568 in mauza Rangameta, cadastral survey plots Nos. 208 and 335 in mauza Achhra, cadastral survey plots Nos. 205 and 224 in mauza Kukurkoonda, cadastral survey plot No. 57 in mauza Dabor, cadastral survey plot No. 636 in mauza Monohara and part of cadastral survey plot No. 117 in mauza Paharpur.
4	Do. ..	Pargana Pandra, mauzas Paharpur in police-station Salanpur, Khayerband and Baradang in police-station Barabani.	5-6	..	19·93	..	..	..	Part of cadastral survey plot No. 117 in mauza Paharpur, cadastral survey plot No. 359 in mauza Khayerband, cadastral survey plot No. 325 and part of cadastral survey plot No. 85 in mauza Baradang.
5	Do. ..	Pargana Pandra, mauzas Baradung and Panuria in police-station Barabani.	7	..	10·82	..	..	..	Part of cadastral survey plot No. 85 in mauza Baradung and cadastral survey plots Nos. 2717, 2718, 2721, 2722 and part of cadastral survey plots Nos. 2723, 2246 and 4248 in mauza Panuria.
				Total ..	48 03				

S. DUTT, Collector.

Burdwan, the 6th April 1937.

In the Court of the Sub-Judge at Rangpur.

MONEY EXECUTION CASE No. 184 of 1936.

Gopee Ballabh Sen and others, represented by Mr. S. N. Banerjee, Receiver, decree-holders,

versus

Joges Govinda Majumder, judgment-debtor.

Date of sale—3rd May 1937, at 12 noon.

Total claim—Rs. 14,729-5-9.

THE right, title and interest of the judgment-debtor in the scheduled property will be sold in the sale room of the above Court on the date and hour mentioned above.

Schedule of property.

In the district of Rangpur, mahal No. 71 in the Rangpur Collectorate, known as lot Matukpur Gayraha. Annual revenue in 16 annas share of which is Rs. 1,252-2-10, the judgment-debtor having proprietary right in 5 annas 6 pies share of the said mahal which consists of the following mauzas:—

Chhaola (Chhaona), Kabir Sadar Kismat (Kuber Sadar) within the police-station Kotwali and mauza Matukpur within the police-station Gangachra and mauza Jittar Sadar (zilla Sadar) within the police-station Pirgachha and mauza Kalikapur within police-station Kaliganj and mauza Siddheswari within the police-station Jaldhaka.

Valuation is assessed at Rs. 2,000.

M. P. SINHA, Sub-Judge.

Rangpur, the 7th April 1937.

(768—1)

In the High Court of Judicature at Fort William in Bengal, in Insolvency.

NOTICE OF ADJUDICATION ORDER.

No. 26 of 1937.

Re Satya Charan Dey, residing at No. 29/1, Hidaram Banerjee Lane in the town of Calcutta, and carrying on business at No. 51, Wellesley Street, Calcutta, as a furniture dealer, under the name and style of Vincent & Co., and also at No. 8/1, Nebutolla Row, Calcutta, as timber merchant, under the name and style of Satya Charan Dey, ex parte the debtor in person.

ON the 20th day of March 1937 an order was made by the High Court of Judicature at Fort William in Bengal in its insolvency jurisdiction adjudging the abovenamed as an insolvent.

Note.—All debts due to the estate should be paid to me.

Dated this 5th day of April 1937.

S. C. H. MEYER, Official Assignee.

In the High Court of Judicature at Fort William in Bengal, in Insolvency.

NOTICE OF ADJUDICATION ORDER.

No. 27 of 1937.

Re Henry Smith, residing at No. 192, Marquis Street in the town of Calcutta, employed as an assistant by Messrs. Garden Reach Workshops, Ltd., at Nos. 43/46, Garden Reach Road in the suburbs of Calcutta, ex parte the debtor in person.

ON the 5th day of April 1937 an order was made by the High Court of Judicature at Fort William in Bengal in its insolvency jurisdiction adjudging the abovenamed as an insolvent.

Note.—All debts due to the estate should be paid to me.

Dated this 7th day of April 1937.

S. C. H. MEYER, Official Assignee.

In the Court of the Sub-Judge at Asansol.

INSOLVENCY CASE No. 7 OF 1937.

Upendra Keot of Searsole, police-station Raniganj, chauki Asansol, district Burdwan, petitioner.

NOTICE is hereby given that the above petitioner has been adjudged insolvent on 19th March 1937, and directed to apply for his discharge within six months from that date.

J. P. BANERJEA, Sub-Judge.

Asansol, the 5th April 1937.

(764—1)

In the Court of the Sub-Judge at Asansol.

INSOLVENCY CASE No. 5 OF 1937.

George Henry Williams of Asansol, petitioner.

NOTICE is hereby given that the abovenamed petitioner has been adjudged insolvent on 19th March 1937, and he has been directed to apply for discharge within one year from that date.

J. P. BANERJEA, Sub-Judge.

Asansol, the 3rd April 1937.

(765—1)

In the Court of the Sub-Judge at Asansol.

INSOLVENCY CASE No. 10 OF 1937.

Lal Mohammad Fitter of Asansol, petitioner.

NOTICE is hereby given that the insolvency petition filed by the abovenamed petitioner has been admitted, and that the 7th May 1937 has been fixed for orders thereof.

J. P. BANERJEA, Sub-Judge.

Asansol, the 3rd April 1937.

(766—1)

In the Court of the Addl. District Judge of Hooghly at Howrah.

INSOLVENCY PETITION No. 22 OF 1936.

NOTICE is hereby given that Janendra Nath Deysarkar, son of late Kali Charan Deysarkar, of 4, Upendra Mitra Lane, thana Golabari, district Hooghly, was on the 22nd June 1936 adjudged an insolvent. The 23rd April 1937 has been fixed for hearing the application for final discharge.

T. ROXBURGH, Addl. District Judge.

Howrah, the 1st April 1937.

(760—1)

In the Court of the District Judge of Hooghly.

NOTICE is hereby given, under clause (2) of section 41 of the Provincial Insolvency Act, V of 1920, to his creditors that the final discharge petition of Fanindra Nath Sur, son of late Dinonath Sur, of Bhadreswar, thana Bhadreswar, district Hooghly, has been filed in this Court in Insolvency Case No. 70 of 1936, and that the 8th May 1937 has been fixed for the hearing thereof.

S. MUKHERJEE, District Judge.

Chinsura, the 5th April 1937.

(770—1)

In the Court of the Addl. District Judge of Hooghly at Howrah.

INSOLVENCY PETITION No. 126 OF 1936.

NOTICE is hereby given that Bhadreswar Adhicary, son of Ashutosh Adhicary, of 14, Uttam Ghosh Lane, thana Malipanchghora, district Hooghly, was on the 19th March 1937 adjudged an insolvent and directed to apply for discharge within six months.

T. ROXBURGH, Addl. District Judge.

Howrah, the 7th April 1937.

(771—1)

In the Court of the District Judge of Khulna.

INSOLVENCY CASE No. 5 OF 1937.

IT is hereby notified that Asarali Sheikh, son of late Mohammed Amedali Sheikh, of Sonadanga, police-station and district Khulna, applied on 17th March 1937 for being adjudged as an insolvent and 7th May 1937 has been fixed for hearing of the case.

S. N. SEN, District Judge.

Khulna, the 5th April 1937.

(767—1)

In the Court of the District Judge of Nadia.

INSOLVENCY CASE No. 3 OF 1937.

Nrishinha Prosad Mallik, son of late Ashutosh Mallik, of Nabadwip, police-station Nabadwip, district Nadia, petitioner.

NOTICE is hereby given, under clause (2) of section 19 of the Provincial Insolvency Act, V of 1920, to his creditors that the abovenamed petitioner has filed an insolvency petition and that 19th April 1937 has been fixed for the hearing thereof.

B. B. CHATTERJI, for District Judge.

Krishnagar, the 5th April 1937.

(759—1)

In the Court of the District Judge of 24-Parganas.

INSOLVENCY CASE No. 11 OF 1937.

Fote Khan of 56, Pipe Road, Kidderpore, 24-Parganas, applicant.

To Syed Mohammad Akber of 39, Dent Mission Road, Kidderpore, and others, creditors.

ON the 1st day of April 1937 it was ordered that the matter of the petition of the applicant be heard on the 3rd day of May 1937, and that the said applicant do attend to be examined by this Court on that date.

M. H. B. LETHBRIDGE, District Judge.

Alipore, the 2nd April 1937.

(755—1)

ORDER OF ADJUDICATION.

Section 27 of the Provincial Insolvency Act, V of 1920.

In the Court of the District Judge at Alipore.

INSOLVENCY APPLICATION No. 35 OF 1936.

PURSUANT to a petition, dated 1st October 1936, filed by Gour Mohan Halder of Nandanpur, police-station Budge Budge, 24-Parganas, debtor, and on the application of the debtor himself and on reading his application and hearing his pleader, it is ordered that the debtor be and the said debtor is hereby adjudged insolvent.

It is further ordered that the debtor do apply for his discharge on or before 21st March 1938.

Dated this 23rd day of March 1937.

M. H. B. LETHBRIDGE, District Judge.

(756—1)

ORDER OF ADJUDICATION.

Section 27 of the Provincial Insolvency Act, V of 1920.

In the Court of the District Judge at Alipore.

INSOLVENCY APPLICATION No. 38 OF 1936.

PURSUANT to a petition, dated 14th December 1936, filed by Sk. Oli Mohammed of 1, Bahir Senah Road, Belinghata, 24-Parganas, debtor, and on the application of the debtor himself and on reading his application and hearing his pleader, it is ordered that the debtor be and the said debtor is hereby adjudged insolvent.

It is further ordered that the debtor do apply for his discharge on 21st March 1938.

Dated this 23rd day of March 1937.

M. H. B. LETHBRIDGE, District Judge.

(767—1)

ORDER OF ADJUDICATION.

Section 27 of the Provincial Insolvency Act, V of 1920.

In the Court of the District Judge at Alipore.

INSOLVENCY APPLICATION No. 39 OF 1936.

PURSUANT to a petition, dated 14th December 1936, filed by Thakur Sing of 18/2, Chetla Road, police-station Alipore, 24-Parganas, debtor, and on the application of the debtor himself and on reading his application and hearing his pleader, it is ordered that the debtor be and the said debtor is hereby adjudged insolvent.

It is further ordered that the debtor do apply for his discharge on 21st March 1938.

Dated this 23rd day of March 1937.

M. H. B. LETHBRIDGE, District Judge.

(758—1)

MR. MADAN CHANDRA GHOSE intends to be enrolled as an Advocate of the Calcutta High Court.

(665—4)

RASH BEHARI MAZUMDAR intends to enrol himself as an Advocate of the High Court, Calcutta.

(686—4)

DHONESH CHANDRA MITRA, Pleader, desires to be enrolled as an Advocate of the High Court, Calcutta.

(743—4)

Federal Public Service Commission.

APPLICATIONS are invited for the post of Head Clerk, Imperial Library, Calcutta. (2) Post permanent and pensionable. Probation one year. (3) Pay: —(a) For new entrants—Rs. 175—15/2—250. (b) For persons in continuous Government service since 15th July 1931—Rs. 200—10—300. (4) Candidates should possess clerical experience, personality and ability to control an office. They are expected to possess knowledge of accounts and office routine and satisfactory general knowledge. A degree desirable in addition. (5) Age preferably between 30 and 40. (6) Candidates must be British subjects of Indian domicile. State subjects who have obtained the necessary declaration under section 262(1) of the Government of India Act, 1935, also eligible. (7) Government servants eligible if permitted to apply by their Departments. (8) Canvassing in any form will disqualify. (9) Last date for receipt of applications, which must be on the prescribed form, 18th May 1937. Prescribed application forms and further particulars may be obtained from the Secretary, Federal Public Service Commission, Simla. Applicants for forms must mention the name of the post.

Delhi, the 7th April 1937.

(804—1)

Federal Public Service Commission.

APPLICATIONS are invited for the post of Assistant Director, Kodaikanal Observatory. (2) Post temporary up to 11th April 1939, thereafter permanent. Probation 2 years. Service terminable by three months' notice on either side during probationary period. (3) Pay:—(a) For new entrants—Rs. 350—25—600—Efficiency Bar—40—800—50—950 (Probationers—Rs. 300—325). (b) For persons in continuous permanent Government service since 15th July 1931—Rs. 400—50—600—600—50—800—Efficiency Bar—50—1,000—1,000—50—1,250. (4) Qualifications:—A candidate must (a) possess an Honours degree in Physics and (b) have taken an active part in some experimental research, preferably in spectroscopy or astrophysics, and shown an aptitude therefor. Advanced mathematics or mathematical physics and workshop experience in metal work and lathe work as well as experience in an observatory desirable in addition. (5) Age not exceeding 30. (6) Candidates must be British subjects of Indian domicile. Subjects of Indian States who have obtained the necessary declaration under section 262(1) of the Government of India Act, 1935, also eligible. Women eligible. (7) Government servants eligible, if permitted to apply by their Departments. (8) Government reserve the right to prefer a member of the minority communities if one is on the list of candidates most suitable for appointment submitted by the Federal Public Service Commission. (9) Canvassing in any form will disqualify. (10) Last date for receipt of applications, which must be on the prescribed form, 18th May 1937. Prescribed application forms and further particulars may be obtained from the Secretary, Federal Public Service Commission, Simla. Applicants for forms must mention the name of the post.

Delhi, the 6th April 1937.

(803—1)

The Bengal and Madras Service Family Pension Fund which is provisionally managed and assisted by Government has for its object the provision of monthly pensions for the maintenance of the widows and children of subscribers and is open, with certain exceptions, to all active and pensioned members of the Uncovenanted service of Government (except those serving under the Government of Bombay), and to Local Fund servants earning pensions from Government. Some of the special features of the fund are (1) that widowed daughters incapable of re-marriage or children labouring under such mental or bodily infirmities as incapacitate them from earning their livelihood or preclude the possibility of marriage (in case of a daughter) are admitted to its benefits; and (2) that subscribers to the Widows' and Daughters' branches are entitled to a refund of 30 per cent. of the premia paid, should the nominee predecease them after five years of admission. The second quinquennial valuation of the Fund has been completed by the Actuary to the Government of India, and his report discloses very favourable results. For forms of application and rules of the Fund apply to the Accountant-General, Bengal, Imperial Secretariat Buildings, Calcutta.

TO whomsoever it may concern, the following notice is hereby given that the Hon'ble Board of Revenue, Bengal, has by its order No. 822W., dated the 14th January 1937, declared Srijukta Indumati Devi Choudhurani, widow of late Babu Birendra Chandra Roy Choudhury, a disqualified proprietress of the Dhankora Court of Wards Estate No. I, Dacca, and has retained charge and is managing all her properties, moveable or immovable. No payment by any bank, company, corporation or any person should henceforth be made to her and all payments should be made to me on her behalf as her Manager under the Court of Wards. Any payment made to her will be at his own risk.

N. C. SEN, Manager,
Dhankora C. W. Estate No. I.

Banglabazar, Dacca, the 25th February 1937.

(666—3)

Notes.

PORTIONS of the following notes of the Calcutta Office of Issue are stated to have been destroyed, and payment of their value has been claimed by the person whose name is placed against the numbers. Any other person claiming a right to them is warned to communicate at once with the undersigned:—

Register No.	Number of Notes.	Value.	Name of claimant.
		Rs.	
W D 6-37	T/17, 222327	100	Abdul Jalil Biswas, son of Elahi Bux Biswas, village Jorpukhuria, post office Bamandi, district Nadia.
	T/17, 685829	100	
	T/17, 646167	100	
	T/17, 685830	100	
	T/17, 646166	100	
	T/17, 756364	100	
	T/17, 685832	100	
	T/17, 756365	100	
	T/17, 685831	100	
	T/17, 711659	100	
	T/17, 711660	100	
	T/17, 757796	100	
	T/17, 646165	100	
	T/17, 756366	100	
	T/17, 189287	100	

S. GUPTA, Currency Officer.

Reserve Bank of India, Issue Department, Calcutta, the 1st April 1937.

Imperial Bank of India.

The following appointment on the Bank's staff is hereby notified:—

Mr. A. L. Heywood to be Head Assistant, Accountant's Department, Local Head Office, Calcutta, as from the 7th April 1937, vice Mr. T. S. Wainwright.

By order,

B. A. C. NEVILLE,
Secretary and Treasurer.

Calcutta, the 6th April 1937.

(761—1)

Lost.

THE Government Promissory Note No. 376540 of the 3½ per cent. loan of 1900-01 for Rs. 1,000, originally standing in the name of Ashutosh Mullick, the proprietor, by whom it was never endorsed to any other person, having been lost, notice is hereby given that payment of the above note and the interest thereupon have been stopped at the Public Debt Office, Reserve Bank of India, Calcutta, and that application is about to be made for the issue of duplicate in favour of the proprietor. The public are cautioned against purchasing or otherwise dealing with the abovementioned security.

Signature of the advertiser—Ashutosh Mullick.

Residence—Babugange, Hooghly.

(787—3)

Lost.

A RECEIPT numbered 1876, dated 23rd March 1937, and granted by the Reserve Bank of India, Public Debt Office, on submission of the undermentioned Government Promissory Note. Notice of loss has been given to the Reserve Bank of India, Public Debt Office, and the undersigned is about to apply for surrender of the security:—

G. P. Note No.	Loan.	Amount.	Holder's name.
		Rs.	
H003406	4 per cent., 1960-70.	5,000	Indar Dutt Poddar.

Name of the proprietor—Indar Dutt Poddar.

Residence—C/o Sitaram, Rupram, 402, Upper Chitpur Road, Calcutta.

(788—1)

Lost.

THE Government Promissory Note No. 117459 of the 3½ per cent. loan of 1900-01 for Rs. 500, originally standing in the name of Prosad Das Boral and Brothers, and last endorsed to Charuprasad Chatterjee (since deceased), the proprietor, by whom it was never endorsed to any other person, having been lost, notice is hereby given that payment of the above note and the interest thereupon have been stopped at the Public Debt Office, Reserve Bank of India, Calcutta, and that application is about to be made for the issue of duplicate in favour of Sm. Saralabala Debi. The public are cautioned against purchasing or otherwise dealing with the abovementioned security.

Signature of the advertiser—Saralabala Debi.

Residence—57/1, Puddapukur Road, Calcutta.

(789—3)

Lost.

A RECEIPT numbered 6567, dated 16th March 1936, and granted by the Reserve Bank of India, Public Debt Office, on submission of the undermentioned Government Promissory Note. Notice of loss has been given to the Reserve Bank of India, Public Debt Office, and the undersigned is about to apply for surrender of the security:—

G. P. Note No.	Loan.	Amount.	Holder's name.
		Rs.	
115738	3 per cent., 1896-97.	500	Kamalasana Sinha.

Name of the proprietor—Kamalasana Sinha.

Residence—P250, Rashbehari Avenue, Calcutta.

(790—1)

In the matter of the Indian Companies Act, 1913,

and

In the matter of the Bogra Printing and Banking Company, Ltd. (in voluntary liquidation).

NOTICE is hereby given, pursuant to section 208E of the Indian Companies Act, VII of 1913, that the final general meeting of the members of the abovenamed Company, for its dissolution, will be held on Monday, the 31st day of May 1937, at 5 p.m., at the residence of Babu Hemraj Saraf, merchant, Bogra, for the purpose of receiving the account and report of winding up, showing how the winding up has been conducted and property disposed of and of hearing any explanations that may be given by the liquidators.

HEMRAJ SARAF, for self and co-liquidators.

Bogra, the 6th April 1937.

(762—1)

In the matter of the Indian Companies Act, 1913-36,

and

In the matter of

Assam United Tea Co., Ltd. (in liquidation).
Anglo-Bengal Co., Ltd. (in liquidation).
Barony Co., Ltd. (in liquidation).
Bhamun Tea Co., Ltd. (in liquidation).
Easterly Co., Ltd. (in liquidation).
Garden Co., Ltd. (in liquidation).
Ghazipore Tea Co., Ltd. (in liquidation).
Hingrijan Tea Co., Ltd. (in liquidation).
Khowang Tea Co., Ltd. (in liquidation).
Mirzapore Tea Co., Ltd. (in liquidation).
Rhoni Tea Co., Ltd. (in liquidation).
Selim Hill Tea Co., Ltd. (in liquidation).
Tinkong Tea Co., Ltd. (in liquidation).

NOTICE is hereby given that the final meetings of shareholders of the abovenamed Companies will be held at 4, Lyons Range, Calcutta, on Wednesday, 12th May 1937, for the purpose of receiving from the liquidator the accounts of the winding up, showing how the winding up has been conducted and the property disposed of and to pass a resolution in regard to the disposal of the books of the Companies.

The meeting of the first named Company will be held at 12 noon, and the meetings of the other Companies will follow in the order named with five-minute intervals.

F. G. ROBERTS, liquidator.

4, Lyons Range,
Calcutta, the 8th April 1937.

(786—1)

In the matter of the Indian Companies Act, 1913 and 1936,

and

In the matter of Noran, Limited (in voluntary liquidation).

MEMBERS VOLUNTARY WINDING UP.

NOTICE is hereby given that at an extraordinary general meeting of the members of the abovenamed Company duly convened and held at 5, Fairlie Place, Calcutta, on Saturday, the 3rd April 1937, the following resolution was passed as a special resolution:—

"That the Company be wound up voluntarily as a Members' Voluntary Liquidation and that Mr. E. J. Carter, Mr. James Orr, Mr. David Mitchell, Mr. R. S. Arthur and Mr. C. D. Smith of 4, Lyons Range, Calcutta, be and they are hereby appointed liquidators for the purpose of such winding up with joint and several powers at such remuneration as may be agreed between them and the shareholders."

F. G. ROBERTS, Chairman.

4, Lyons Range, Calcutta, the 3rd April 1937.

(763—1)

Imperial Library.

Secretariat Buildings, 6, Esplanade East, Calcutta. Open on—

Week days and Saturdays from 10 a.m. to 7 p.m.
Sundays and Gazetted holidays from 2 p.m. to 5 p.m.

THE Imperial Library is also a Lending Library. It is free to all except children. There is no subscription to pay.

K. M. ASADULLAH, Librarian.

CINCHONA FACTORY PRODUCTS.

By order of the Government of Bengal Cinchona Factory Products as manufactured and packed at the Cinchona Factory, Mungpoo, Darjeeling district, will be sold and distributed by the Superintendent of the Presidency Jail, *in original packages* as received from the Mungpoo Factory, at the rates herein noted from the 1st May 1926 :—

Name of drug	Price per lb. in powder form. Taken at a time. For 60 lbs. and upwards.	For 6 lbs. and over but less than 60 lbs.	For any quantity less than 6 lbs.	Price in 5 grain tablets. 1,000 tablets.	500 tablets.	250 tablets.	Price by weight per lb.
	Rs.	Rs.	Rs.	Rs.	Rs. a.	Rs. a.	Rs.
Quinine Bisulphate ..	18	19	20	16	8 0	4 4	..
" Hydrobromide ..	23	24	25	20	10 0	5 4	..
" Bihydrobromide ..	26	27	28	23	11 8	6 0	..
" Salicylate ..	24	25	26	..	..	..	..
" Tannate ..30 per cent. 35 per cent.	14	15	16	..	..	..	14

N.B.—Packing free in tins, sizes 1 lb., 8 oz. and 4 oz. only. Packing in bottles or smaller sizes of tins extra.

Quinine Sulphate.

For 60 lbs. and upwards at a time .. Rs. 18 per lb.
For 6 lbs. and over but less than 60 lbs. at a time .. .. .. " 19 "
For any quantity less than 6 lbs. .. " 20 "

Crude Quinine Sulphate Powder .. Rs. 14 per lb.
Crude Quinine Sulphate Tablets .. " 12-8 "
Will be sold to Government departments, local authorities, hospitals, dispensaries and missionaries in the Bengal area of distribution.

Totaquina.

Irrespective of quantity .. Rs. 13-8 per lb.
For sale to hospitals and dispensaries in Bengal, Bihar, Orissa and Assam.

Quinine Hydrochloride.

For 60 lbs. and upwards at a time .. Rs. 23 per lb.
For 6 lbs. and over but less than 60 lbs. at a time .. .. .. " 24 "
For any quantity less than 6 lbs. .. " 25 "

Quinine Di-Hydrochloride.

For 60 lbs. and upwards at a time .. Rs. 25 per lb.
For 6 lbs. and over but less than 60 lbs. at a time .. .. .. " 26 "
For any quantity less than 6 lbs. .. " 27 "

Quinidine Sulphate.

For 60 lbs. and upwards at a time .. Rs. 20 per lb.
For 6 lbs. and over but less than 60 lbs. at a time .. .. .. " 21 "
For any quantity less than 6 lbs. .. " 22 "

Cinchonidine Sulphate.

For 60 lbs. and upwards at a time .. Rs. 25 per lb.
For 6 lbs. and over but less than 60 lbs. at a time .. .. .. " 26 "
For any quantity less than 6 lbs. .. " 27 "

Cinchonine Sulphate.

For 60 lbs. and upwards at a time .. Rs. 12 per lb.
For 6 lbs. and over but less than 60 lbs. at a time .. .. .. " 13 "
For any quantity less than 6 lbs. .. " 14 "

*Cinchona Febrifuge (Powder).

For 60 lbs. and upwards at a time .. Rs. 9 per lb.
For 6 lbs. and over but less than 60 lbs. at a time .. .. .. " 9 "
For any quantity less than 6 lbs. .. " 10 "

*Cinchona Febrifuge (Tablets).

For 60 lbs. and upwards at a time .. Rs. 10 per lb.
For 6 lbs. and over but less than 60 lbs. at a time .. .. .. " 10 "
For any quantity less than 6 lbs. .. " 11 "

Supply of Cinchona Febrifuge to all authorised indenters will be rationed in the proportion of 1½ of Cinchona Febrifuge to 1 of Quinine Sulphate at their existing prescribed prices.

Cinchona Bark (in 50 pound original bags).

Per bag .. .. .. Rs. 25.

4 grains Quinine Tablets.

Rs. a.
2 8 per box of 200 tablets (for Bengal and other provinces).
15 8 per lb.

5 grains Quinine Tablets.

Rs. a.
15 8 per lb. sold in 1 lb., ½ lb. and ¼ lb. tins.

5 grains Quinine Hydrochloride Tablets.

Rs. a.
20 0 per 1,000 tablets.
10 0 " 500 "
5 4 " 250 "

Packing free in tins, sizes 1 lb., 8 oz. and 4 oz. only. Packing in bottles or smaller sizes in tins extra.

5 grains Quinine Bihydrochloride Tablets.

Rs. a.
22 0 per 1,000 tablets.
11 0 " 500 "
6 0 " 250 "

Packing free in tins, sizes 1 lb., 8 oz. and 4 oz. only. Packing in bottles or smaller sizes in tins extra.

Transit charges extra in every case.

Quinine and Cinchona products will be sold by the Presidency Jail to (*a*) Local Governments and departments of Local Governments, (*b*) dispensaries and hospitals belonging to or managed by Local Governments and local authorities, (*c*) Municipalities, District Boards, Railways, Union Boards and other local authorities otherwise than for purposes of sale to the public, (*d*) Missions, (*e*) Government Medical Store Depot, Calcutta.

Provinces other than Bengal, Bihar, Orissa and Assam will get their supplies of Sulph. Quinine and Cinchona Febrifuge Powder and Tablets from the Director, Botanical Survey of India, Sibpur, Howrah.

Local sale at the jail gate from 10 a.m. to 3-30 p.m.

The system of payment is by—*Cash in advance*—by "*Treasury Challans*," "*Remittance Transfer Receipts*" or crossed "*Cheques*."

Indents unaccompanied by cash in advance will be sent Value Payable Post. Credit sale is not allowed except under special circumstances.

In the case of *Government officers* payments will be recovered by *Book Transfer, i.e., Countersigned Invoices*, in the event of *Cash* not accompanying the indent by "*Treasury Challans*," *Remittance Transfer Receipt or Cheque*.

2. Price and postage must accompany the price of the drug (when the drug is required by post).

The name of the Railway and Steamer Station or Post Office must be written distinctly when the parcels are required by Rail, Steamer or by Post. Railway parcels are sent by passenger train only.

A scale of postage is given below.

	1 oz.	2 ozs.	4 ozs.	½ lb.	¾ lb.	1 lb.
	As.	As.	As.	As.	As.	Rs. A.
Quinine Sulph. ..	..	..	7	7	11	0 11
Cinchona Feb. ..	..	..	7	7	11	0 11
Cinchona Feb. Tablets	..	..	7	7	11	0 11
Quinine Hydrochlor. ..	5	5	7	7	..	0 11
Quinine Di-hydrochlor.	5	5	7	7	..	0 11
Quinine Tablets ..	..	..	7	7	11	0 11
Totaquina ..	..	..	7	7	11	0 11

	1½ lb.	2 lb.	3 lb.	4 lb.	5 lb.	6 lb.
	Rs. A.	Rs. A.	Rs. A.	Rs. A.	Rs. A.	Rs. A.
Quinine Sulph. ..	0 15	1 3	1 7	1 15	2 7	2 11
Cinchona Feb. ..	0 15	0 15	1 7	1 11	2 3	2 7
Cinchona Feb. Tablets	0 15	1 3	1 11	1 15	2 7	2 15
Quinine Hydrochlor. ..	0 15	1 3	1 7	1 15	2 7	2 11
Quinine Di-hydrochlor.	0 15	0 15	1 7	1 11	2 3	2 7
Quinine Tablets ..	0 15	0 15	1 7	1 11	1 15	2 3
Totaquina ..	0 15	1 3	1 7	1 15	2 7	2 11

Two different drugs are not packed in the same parcel and postage must be paid separately for each kind.

N.B.—Postage stamps are not accepted as revenue.

Government reserve the right to alter the price without notice.

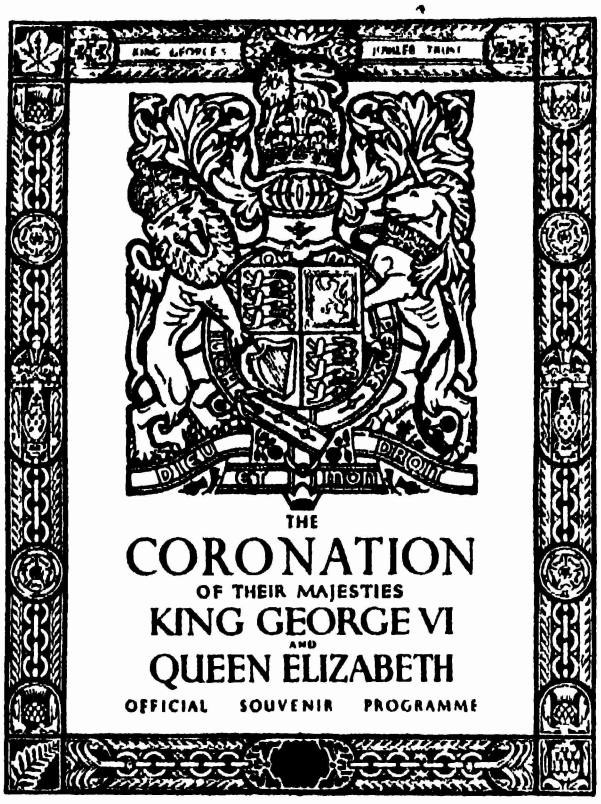

AN Edition of the Official Souvenir Programme of the Coronation has been produced for His Majesty's subjects overseas. It consists of thirty-two pages of text and illustration and a cover bearing the Royal Coat-of-Arms printed in full colours and gold.

The contents include:—

SPECIAL PHOTOGRAPHS
OF THEIR MAJESTIES
KING GEORGE VI
AND
QUEEN ELIZABETH
PHOTOGRAPHS OF
HER MAJESTY QUEEN MARY
THEIR ROYAL HIGHNESSES
THE PRINCESS ELIZABETH
THE PRINCESS MARGARET
AND OTHER MEMBERS OF THE ROYAL FAMILY

A CORONATION ODE
BY JOHN MASEFIELD, POET LAUREATE

THE KING'S MAJESTY
THE SIGNIFICANCE OF THE CORONATION TO THE EMPIRE
BY JOHN DRINKWATER

DESCRIPTION OF THE CORONATION PROCESSION

A PICTORIAL MAP OF THE ROUTE OF THE PROCESSION

AN INTRODUCTION TO THE SERVICE
BY HIS GRACE
THE LORD ARCHBISHOP OF CANTERBURY

THE CORONATION SERVICE IN WESTMINSTER ABBEY

AN EXPLANATION OF THE CORONATION CEREMONIAL WITH ILLUSTRATIONS
BY SIR GERALD WOLLASTON, GARTER PRINCIPAL KING OF ARMS

A GENEALOGICAL TABLE SHOWING THE DESCENT OF THE CROWN

The Official information contained in this Souvenir Programme will be invaluable to His Majesty's subjects throughout the world Those who will be listening to the Coronation broadcast from London will be able to follow the historic ceremony word for word. The Programme will be treasured as a lasting record of His Majesty's Coronation. It will be on sale on Friday, April 23rd In view of the great demand the public are advised to order their copies in advance from newsagents or booksellers.

PRICE IN INDIA—Rs. 1/4/-

By gracious permission of His Majesty, this Programme is issued by King George's Jubilee Trust.

Registered No. C207

The Calcutta Gazette

THURSDAY, APRIL 15, 1937.

PART V

Acts of the Indian Legislature assented to by the Governor-General and Ordinances promulgated under section 72 of the Government of India Act.

GOVERNMENT OF INDIA.

Legislative Department.

The following Act of the Indian Legislature received the assent of the Governor General on the 4th March, 1937, and is hereby promulgated for general information :—

ACT No. III OF 1937.

An Act further to amend the Land Customs Act, 1924, for certain purposes.

WHEREAS it is expedient further to amend the Land Customs Act, 1924, for the purposes hereinafter appearing, XIX of 1924

AND WHEREAS it is expedient that certain other enactments should be repealed,

It is hereby enacted as follows :—

Short title and commencement.

1. (*1*) This Act may be called the Land Customs (Amendment) Act, 1937.

(*2*) It shall come into force on such date as the Governor General in Council may, by notification in the Gazette of India, appoint.

Amendment of long title and preamble, Act XIX of 1924.

2. In the long title and preamble to the Land Customs Act, 1924 (hereinafter referred to as the said Act), for the word "India" the words "British India" shall be substituted. XIX of 1924

Amendment of section 2, Act XIX of 1924.

3. In clause (*f*) of section 2 of the said Act the brackets and words "(other than territory forming part of a State in India)" shall be omitted.

Omission of section 10, Act XIX of 1924.

4. Section 10 of the said Act shall be omitted.

Amendment of Schedule, Act XIX of 1924.

5. In the Schedule to the said Act, before the word and figures "section 167" the word and figures "section 88," shall be inserted, and for the word and figures "sections 169" the word and figures "sections 168" shall be substituted.

Repeals.

6. (*1*) The Acts mentioned in the Schedule are hereby repealed to the extent specified in the fourth column thereof.

(*2*) All notifications published and all rules and orders made, or deemed to have been made, under any of those Acts and in force immediately before the commencement of this Act shall, so far as they are not inconsistent with the Land Customs Act, 1924, be deemed to have been published and made under that Act. XIX of 1924.

THE SCHEDULE.

ENACTMENTS REPEALED.

[*See section 6 (1).*]

Year.	No.	Short title.	Extent of repeal.
		Acts of the Governor General in Council.	
1844	VI	The Madras Inland Customs Act, 1844.	So much as has not been repealed.
1857	XXIX	The Bombay Land-customs Act, 1857.	So much as has not been repealed.
1874	XV	The Laws Local Extent Act, 1874.	So much of the Second Schedule as relates to Act VI of 1844.
1901	XI	The Amending Act, 1901.	So much of the First Schedule as relates to the Madras Inland Customs Act, 1844, and the Madras Inland Customs (Amendment) Act, 1893.
1920	XXXVIII	The Devolution Act, 1920.	So much of the First Schedule as relates to Act XXIX of 1857.
		Acts of the Indian Legislature.	
1934	XIV	The Sugar (Excise Duty) Act, 1934.	Sub-section (*2*) of section 6.
1934	XXXII	The Indian Tariff Act, 1934.	Section 7.
		Madras Act.	
1893	II	The Madras Inland Customs (Amendment) Act, 1893.	The whole.
		Bombay Acts.	
1915	III	The Bombay Decentralization Act, 1915.	The Second Schedule.
1921	II	The Bombay Short Titles Act, 1921.	So much of the Schedule as relates to the Bombay Land-customs Act, 1857.

G. H. SPENCE,
Secy. to the Govt. of India.

GOVERNMENT OF INDIA.

Legislative Department.

The following Act of the Indian Legislature received the assent of the Governor General on the 4th March, 1937, and is hereby promulgated for general information :—

ACT No. VI OF 1937.

An Act to make certain further provisions respecting the law of arbitration in British India.

WHEREAS India was a State signatory to the Protocol on Arbitration Clauses set forth in the First Schedule, and to the Convention on the Execution of Foreign Arbitral Awards set forth in the Second Schedule, subject in each case to a reservation of the right to limit its obligations in respect thereof to contracts which are considered as commercial under the law in force in British India ;

AND WHEREAS it is expedient, for the purpose of giving effect to the said Protocol and of enabling the said Convention to become operative in British India, to make certain further provisions respecting the law of arbitration ;

It is hereby enacted as follows :—

Short title, extent and operation.

1. (*1*) This Act may be called the Arbitration (Protocol and Convention) Act, 1937.

(*2*) It extends to the whole of British India, including British Baluchistan and the Sonthal Parganas.

(*3*) The provisions of this Act, except this section, shall have effect only from such date as the Governor General in Council may, by notification in the Gazette of India, appoint in this behalf, and the Governor General in Council may appoint different dates for the coming into effect of different provisions of the Act.

Interpretation.

2. In this Act "foreign award" means an award on differences relating to matters considered as commercial under the law in force in British India, made after the 28th day of July, 1924,—

(*a*) in pursuance of an agreement for arbitration to which the Protocol set forth in the First Schedule applies, and

(*b*) between persons of whom one is subject to the jurisdiction of some one of such Powers as the Governor General in Council, being satisfied that reciprocal provisions have been made, may, by notification in the Gazette of India, declare to be parties to the Convention set forth in the Second Schedule, and of whom the other is subject to the jurisdiction of some other of the Powers aforesaid, and

(*c*) in one of such territories as the Governor General in Council, being satisfied that reciprocal provisions have been made, may, by like notification, declare to be territories to which the said Convention applies,

and for the purposes of this Act an award shall not be deemed to be final if any proceedings for the purpose of contesting the validity of the award are pending in the country in which it was made.

Stay of proceedings in respect of matters to be referred to arbitration.

3. Notwithstanding anything contained in the Indian Arbitration Act, 1899, or in the Code of Civil Procedure, 1908, if any party to a submission made in pursuance of an agreement to which the Protocol set forth in the First Schedule as modified by the reservation subject to which

IX of 1899.
V of 1908.

it was signed by India applies, or any person claiming through or under him, commences any legal proceedings in any Court against any other party to the submission or any person claiming through or under him in respect of any matter agreed to be referred, any party to such legal proceedings may, at any time after appearance and before filing a written statement or taking any other steps in the proceedings, apply to the Court to stay the proceedings; and the Court unless satisfied that the agreement or arbitration has become inoperative or cannot proceed, or that there is not in fact any dispute between the parties with regard to the matter agreed to be referred, shall make an order staying the proceedings.

Effect of foreign awards.

4. (*1*) A foreign award shall, subject to the provisions of this Act, be enforceable in British India as if it were an award made on a matter referred to arbitration in British India.

(*2*) Any foreign award which would be enforceable under this Act shall be treated as binding for all purposes on the persons as between whom it was made, and may accordingly be relied on by any of those persons by way of defence set off or otherwise in any legal proceedings in British India, and any references in this Act to enforcing a foreign award shall be construed as including references to relying on an award.

Filing of foreign award in Court.

5. (*1*) Any person interested in a foreign award may apply to any Court having jurisdiction over the subject-matter of the award that the award be filed in Court.

(*2*) The application shall be in writing and shall be numbered and registered as a suit between the applicant as plaintiff and the other parties as defendants

(*3*) The Court shall direct notice to be given to the parties to the arbitration, other than the applicant, requiring them to show cause, within a time specified, why the award should not be filed.

Enforcement of foreign award.

6. (*1*) Where the Court is satisfied that the foreign award is enforceable under this Act, the Court shall order the award to be filed and shall proceed to pronounce judgment according to the award.

(*2*) Upon the judgment so pronounced a decree shall follow, and no appeal shall lie from such decree except in so far as the decree is in excess of or not in accordance with the award

Conditions for enforcement of foreign awards.

7. (*1*) In order that a foreign award may be enforceable under this Act it must have—

(*a*) been made in pursuance of an agreement for arbitration which was valid under the law by which it was governed.

(*b*) been made by the tribunal provided for in the agreement or constituted in manner agreed upon by the parties,

(*c*) been made in conformity with the law governing the arbitration procedure,

(*d*) become final in the country in which it was made,

(*e*) been in respect of a matter which may lawfully be referred to arbitration under the law of British India,

and the enforcement thereof must not be contrary to the public policy or the law of British India.

(2) A foreign award shall not be enforceable under this Act if the Court dealing with the case is satisfied that—

(a) the award has been annulled in the country in which it was made, or

(b) the party against whom it is sought to enforce the award was not given notice of the arbitration proceedings in sufficient time to enable him to present his case, or was under some legal incapacity and was not properly represented, or

(c) the award does not deal with all the questions referred or contains decisions on matters beyond the scope of the agreement for arbitration :

Provided that if the award does not deal with all questions referred the Court may, if it thinks fit, either postpone the enforcement of the award or order its enforcement subject to the giving of such security by the person seeking to enforce it as the Court may think fit.

(3) If a party seeking to resist the enforcement of a foreign award proves that there is any ground other than the non-existence of the conditions specified in clauses (a), (b) and (c) of sub-section (1), or the existence of the conditions specified in clauses (b) and (c) of sub-section (2), entitling him to contest the validity of the award, the Court may, if it thinks fit, either refuse to enforce the award or adjourn the hearing until after the expiration of such period as appears to the Court to be reasonably sufficient to enable that party to take the necessary steps to have the award annulled by the competent tribunal.

Evidence.

8. (1) The party seeking to enforce a foreign award must produce—

(a) the original award or a copy thereof duly authenticated in manner required by the law of the country in which it was made ;

(b) evidence proving that the award has become final ; and

(c) such evidence as may be necessary to prove that the award is a foreign award and that the conditions mentioned in clauses (a), (b) and (c) of sub-section (1) of section 7 are satisfied.

(2) Where any document requiring to be produced under sub-section (1) is in a foreign language, the party seeking to enforce the award shall produce a translation into English certified as correct by a diplomatic or consular agent of the country to which that party belongs or certified as correct in such other manner as may be sufficient according to the law in force in British India.

Saving.

9. Nothing in this Act shall—

(a) prejudice any rights which any person would have had of enforcing in British India any award or of availing himself in British India of any award if this Act had not been passed, or

(b) apply to any award made on an arbitration agreement governed by the law of British India.

Rule-making powers of the High Court.

10. The High Court may make rules consistent with this Act as to—

(a) the filing of foreign awards and all proceedings consequent thereon or incidental thereto ;

(b) the evidence which must be furnished by a party seeking to enforce a foreign award under this Act ; and

(c) generally, all proceedings in Court under this Act.

THE FIRST SCHEDULE.

PROTOCOL ON ARBITRATION CLAUSES.

The undersigned, being duly authorised, declare that they accept, on behalf of the countries which they represent, the following provisions :

1. Each of the Contracting States recognises the validity of an agreement whether relating to existing or future differences between parties subject respectively to the jurisdiction of different Contracting States by which the parties to a contract agree to submit to arbitration all or any differences that may arise in connection with such contract relating to commercial matters or to any other matter capable of settlement by arbitration, whether or not the arbitration is to take place in a country to whose jurisdiction none of the parties is subject.

Each Contracting State reserves the right to limit the obligation mentioned above to contracts which are considered as commercial under its national law. Any Contracting State which avails itself of this right will notify the Secretary-General of the League of Nations in order that the other Contracting States may be so informed.

2. The arbitral procedure, including the constitution of the Arbitral Tribunal, shall be governed by the will of the parties and by the law of the country in whose territory the arbitration takes place.

The Contracting States agree to facilitate all steps in the procedure which require to be taken in their own territories in accordance with the provisions of their law governing arbitral procedure applicable to existing differences.

3. Each Contracting State undertakes to ensure the execution by its authorities and in accordance with the provisions of its national laws of arbitral awards made in its own territory under the preceding articles.

4. The Tribunals of the Contracting Parties, on being seized of a dispute regarding a contract made between persons to whom Article 1 applies and including an Arbitration Agreement whether referring to present or future differences which is valid in virtue of the said article and capable of being carried into effect, shall refer the parties on the application of either of them to the decision of the Arbitrators.

Such reference shall not prejudice the competence of the judicial tribunals in case the agreement or the arbitration cannot proceed or becomes inoperative.

5. The present Protocol, which shall remain open for signature by all States, shall be ratified. The ratification shall be deposited as soon as possible with the Secretary-General of the League of Nations, who shall notify such deposit to all the Signatory States.

6. The present Protocol will come into force as soon as two ratifications have been deposited. Thereafter it will take effect, in the case of each Contracting State, one month after the notification by the Secretary-General of the deposit of its ratification.

7. The present Protocol may be denounced by any Contracting State on giving one year's notice. Denunciation shall be effected by a notification addressed to the Secretary-General of the League, who will immediately transmit copies of such notification to all the other Signatory States and inform them of the date on which it was received. The denunciation shall take effect one year after the date on which it was notified to the Secretary-General, and shall operate only in respect of the notifying State.

8. The Contracting States may declare that their acceptance of the present Protocol does not include any or all of the undermentioned territories : that is to say, their colonies, overseas possessions or territories, protectorates or the territories over which they exercise a mandate.

The said States may subsequently adhere separately on behalf of any territory thus excluded. The Secretary-General of the League of Nations shall be informed as soon as possible of such adhesions. He shall notify such adhesions to all Signatory States. They will take effect one month after the notification by the Secretary-General to all Signatory States.

The Contracting States may also denounce the Protocol separately on behalf of any of the territories referred to above. Article 7 applies to such denunciation.

THE SECOND SCHEDULE.

Convention on the Execution of Foreign Arbitral Awards.

Article 1.—In the territories of any High Contracting Party to which the present Convention applies, an arbitral award made in pursuance of an agreement, whether relating to existing or future differences (hereinafter called "a submission to arbitration") covered by the Protocol on Arbitration Clauses opened at Geneva on September 24th, 1923, shall be recognised as binding and shall be enforced in accordance with the rules of the procedure of the territory where the award is relied upon, provided that the said award has been made in a territory of one of the High Contracting Parties to which the present Convention applies and between persons who are subject to the jurisdiction of one of the High Contracting Parties.

To obtain such recognition or enforcement, it shall, further, be necessary :

(*a*) That the award has been made in pursuance of a submission to arbitration which is valid under the law applicable thereto ;

(*b*) That the subject-matter of the award is capable of settlement by arbitration under the law of the country in which the award is sought to be relied upon ;

(*c*) That the award has been made by the Arbitral Tribunal provided for in the submission to arbitration or constituted in the manner agreed upon by the parties and in conformity with the law governing the arbitration procedure ;

(*d*) That the award has become final in the country in which it has been made, in the sense that it will not be considered as such if it is open to opposition, appel or pourvoi en cassation (in the countries where such forms of procedure exist) or if it is proved that any proceedings for the purpose of contesting the validity of the award are pending ;

(*e*) That the recognition or enforcement of the award is not contrary to the public policy or to the principles of the law of the country in which it is sought to be relied upon.

Article 2.—Even if the conditions laid down in Article 1 hereof are fulfilled, recognition and enforcement of the award shall be refused if the Court is satisfied :

(*a*) That the award has been annulled in the country in which it was made;

(*b*) That the party against whom it is sought to use the award was not given notice of the arbitration proceedings in sufficient time to enable him to present his case ; or that, being under a legal incapacity, he was not properly represented ;

(*c*) That the award does not deal with the differences contemplated by or falling within the terms of the submission to arbitration or that it contains decisions on matters beyond the scope of the submission to arbitration.

If the award has not covered all the questions submitted to the arbitral tribunal, the competent authority of the country where recognition or enforcement of the award is sought can, if it thinks fit, postpone such recognition or enforcement or grant it subject to such guarantee as that authority may decide.

Article 3.—If the party against whom the award has been made proves that, under the law governing the arbitration procedure, there is a ground, other than the grounds referred to in Article 1- (*a*) and (*c*), and Article 2(*b*) and (*c*), entitling him to contest the validity of the award in a Court of Law, the Court may, if it thinks fit, either refuse recognition or enforcement of the award or adjourn the consideration thereof, giving such party a reasonable time within which to have the award annulled by the competent tribunal.

Article 4.—The party relying upon an award or claiming its enforcement must supply, in particular ;

(1) The original award or a copy thereof duly authenticated, according to the requirements of the law of the country in which it was made ;

(2) Documentary or other evidence to prove that the award has become final, in the sense defined in Article 1 (*d*), in the country in which it was made ;

(3) When necessary, documentary or other evidence to prove that the conditions laid down in Article 1, paragraph 1 and paragraph 2 (*a*) and (*c*), have been fulfilled.

A translation of the award and of the other documents mentioned in this Article into the official language of the country where the award is sought to be relied upon may be demanded. Such translations must be certified correct by a diplomatic or consular agent of the country to which the party who seeks to rely upon the award belongs or by a sworn translator of the country where the award is sought to be relied upon.

Article 5.—The provisions of the above Articles shall not deprive any interested party of the right of availing himself of an arbitral award in the manner and to the extent allowed by the law or the treaties of the country where such award is sought to be relied upon.

Article 6.—The present Convention applies only to arbitral awards made after the coming into force of the Protocol on Arbitration Clauses, opened at Geneva on September 24th, 1923.

Article 7.—The present Convention, which will remain open to the signature of all the signatories of the Protocol of 1923 on Arbitration Clauses, shall be ratified.

It may be ratified only on behalf of those Members of the League of Nations and non-Member States on whose behalf the Protocol of 1923 shall have been ratified.

Ratifications shall be deposited as soon as possible with the Secretary-General of the League of Nations, who will notify such deposit to all the signatories.

Article 8.—The present Convention shall come into force three months after it shall have been ratified on behalf of two High Contracting Parties. Thereafter, it shall take effect, in the case of each High Contracting Party, three months after the deposit of the ratification on its behalf with the Secretary-General of the League of Nations.

Article 9. The present Convention may be denounced on behalf of any Member of the League or non-Member State. Denunciation shall be notified in writing to the Secretary-General of the League of Nations, who will immediately send a copy thereof, certified to be in conformity with the notifications, to all the other Contracting Parties, at the same time informing them of the date on which he received it.

The denunciation shall come into force only in respect of the High Contracting Party which shall have notified it and one year after such notification shall have reached the Secretary-General of the League of Nations.

The denunciation of the Protocol on Arbitration Clauses shall entail, *ipso facto*, the denunciation of the present Convention.

Article 10.—The present Convention does not apply to the Colonies, Protectorates or territories under suzerainty or mandate of any High Contracting Party unless they are specially mentioned.

The application of this Convention to one or more of such Colonies, Protectorates or territories to which the Protocol on Arbitration Clauses opened at Geneva on September 24th, 1923, applies, can be effected at any time by means of a declaration addressed to the Secretary-General of the League of Nations by one of the High Contracting Parties.

Such declaration shall take effect three months after the deposit thereof.

The High Contracting Parties can at any time denounce the Convention for all or any of the Colonies, Protectorates or territories referred to above. Article 9 hereof applies to such denunciation.

Article 11.—A certified copy of the present Convention shall be transmitted by the Secretary-General of the League of Nations to every Member of the League of Nations and to every non-Member State which signs the same.

G. H. SPENCE,

Secy. to the Govt. of India.

GOVERNMENT OF INDIA.

Legislative Department.

The following Act of the Indian Legislature received the assent of the Governor General on the 4th March, 1937, and is hereby promulgated for general information :--

ACT No. VII OF 1937.

An Act further to amend the Workmen's Compensation Act, 1923, for a certian purpose.

WHEREAS it is expedient further to amend the Workmen's Compensation Act, 1923, for the purpose hereinafter appearing ; It is hereby enacted as follows :— VIII of 1923.

Short title.

1. This Act may be called the Workmen's Compensation (Amendment)Act, 1937.

Amendment of section 35, Act VIII of 1923.

2. (*1*) Section 35 of the Workmen's Compensation Act, 1923, shall be re-numbered as sub-section (*1*) of that section and in the said section as so re-numbered— VIII of 1923.

(*a*) for the words "paid to" the words "deposited with" shall be substituted ;

(*b*) for the words " for the benefit of", where they occur for the first time, the words"which has been awarded to or may be due to" shall be substituted ;

(*c*) after the word " receipt " the word " distribution " shall be inserted ;

(*d*) for the ward " awarded " the word "deposited" shall be substituted ; and

(*e*) for the words "and applicable for the benefit of" the words "which has been awarded to or may be due to" shall be substituted.

(*2*) To the said section as so re-numbered the following proviso shall be added, namely : -

"Provided that no sum deposited under this Act in respect of fatal accidents shall be so transferred without the consent of the employer concerned until the Commissioner receiving the sum has passed orders determining its distribution and apportionment under the provisions of sub-sections (*4*) and (*5*) of section 8."

(*3*) After the said section as so re-numbered the following sub-section shall be added, namely :—

"(*2*) where money deposited with a Commissioner has been so transferred in accordance with the rules made under this section, the provisions elsewhere contained in this Act regarding distribution by the Commissioner of compensation deposited with him shall cease to apply in respect of any such money."

G. H. SPENCE,

Secy. to the Govt. of India.

GOVERNMENT OF INDIA.

Legislative Department.

The following Act of the Indian Legislature received the assent of the Governor General on the 4th March, 1937, and is hereby promulgated for general information :—

ACT No. X OF 1937.

An Act further to amend the Indian Electricity Act, 1910, for certain purposes.

WHEREAS it is expedient further to amend the Indian Electricity Act, 1910, for the purposes hereinafter appearing ; It is hereby enacted as follows :— IX of 1910.

Short title and commencement.

1. (*1*) This Act may be called the Indian Electricity (Amendment) Act, 1937.

(*2*) It shall come into force on such date as the Governor General in Council may, by notification in the Gazette of India, appoint.

Application of Act.

2. The Indian Electricity Act, 1910 (hereinafter referred to as the said Act), shall, in its application to British India, including British Baluchistan and the Sonthal Parganas but excluding Burma, be amended in the manner hereinafter provided. IX of 1910.

Insertion of new section 36A in Act IX of 1910.

3. After section 36 of the said Act the following section shall be inserted, namely :—

Central Electricity Board.

"36A. (*1*) A Board to be called the Central Electricity Board shall be constituted to exercise the powers conferred by section 37.

(*2*) The Central Electricity Board shall consist of fifteen members, namely :—

(*a*) a chairman to be nominated by the Governor General in Council ;

(*b*) one member to be nominated by each of the Local Governments of Madras, Bombay, Bengal, the United Provinces, the Punjab, Bihar, the Central Provinces, Assam, the North-West Frontier Province, Sind and Orissa ;

(*c*) one member, holding office for a period of three years, to be nominated alternately by the Local Government of Delhi and the Local Government of Ajmer-Merwara ;

(*d*) one member to be nominated by the Chief Commissioner of Railways ; and

(*e*) one member to be nominated by the Chief Inspector of Mines.

(*3*) Any vacancy occurring in the Board, otherwise than by the expiry of the term of office of the members referred to in clause (*c*) of sub-section (*2*), shall be filled as soon as may be by a nomination made by the authority by whom the member vacating office was nominated.

(*4*) The Board shall have full power to regulate by by-laws or otherwise its own procedure and the conduct of all business to be transacted by it.

(*5*) The powers of the Central Electricity Board may be exercised notwithstanding any vacancy in the Board."

Amendment of section 37, Act IX of 1910.

4. In section 37 of the said Act, for the words "Governor General in Council", in both places where they occur, the words "Central Electricity Board" shall be substituted.

Amendment of section 38, Act IX of 1910.

5. In section 38 of the said Act,—

(*a*) sub-section (*3*) shall be omitted, and

(*b*) sub-section (*4*) shall be re-numbered as sub-section (*3*).

G. H. SPENCE,

Secy. to the Govt. of India.

GOVERNMENT OF INDIA.

Legislative Department.

The following Act of the Indian Legislature received the assent of the Governor General on the 4th March, 1937, and is hereby promulgated for general information :—

ACT No. XI OF 1937.

An Act further to amend the Indian Boilers Act, 1923, for certain purposes.

WHEREAS it is expedient further to amend the Indian Boilers Act, 1923, for the purposes hereinafter appearing; It is hereby enacted as follows :— V of 1923.

Short title and commencement.

1. (*1*) This Act may be called the Indian Boilers (Amendment) Act, 1937.

(*2*) It shall come into force on such date as the Governor General in Council may, by notification in the Gazette of India, appoint.

Application of Act.

2. The Indian Boilers Act, 1923 (hereinafter referred to as the said Act), shall, in its application to British India, including British Baluchistan and the Sonthal Parganas but excluding Burma, be amended in the manner hereinafter provided. V of 1923.

Amendment of section 2, Act V of 1923.

3. In section 2 of the said Act, after clause (*a*) the following clause shall be inserted, namely :—

" (*aa*) 'Board' means the Central Boilers Board constituted under section 27A : ".

Insertion of new section 27A in Act V of 1923.

Central Boilers Board.

4. After section 27 of the said Act the following section shall be inserted, namely :—

" 27A. (*1*) A Board to be called the Central Boilers Board shall be constituted to exercise the powers conferred by section 28.

(*2*) The Board shall consist of fourteen members, namely :—

(*a*) a chairman to be nominated by the Governor General in Council ;

(*b*) one member to be nominated by each of the Local Governments of Madras, Bombay, Bengal, the United Provinces, the Punjab, Bihar, the Central Provinces, Assam, the North-West Frontier Province, Sind and Orissa ;

(*c*) one member, holding office for a period of three years, to be nominated alternately by the Local Government of Delhi and the Local Government of Ajmer-Merwara ; and

(*d*) one member to be nominated by the Chief Commissioner of Railways.

(*3*) Any vacancy occurring in the Board, otherwise than by the expiry of the term of office of the member referred to in clause (*c*) of sub-section (*2*), shall be filled as soon as may be by a nomination made by the authority by whom the member vacating office was nominated.

(4) The Board shall have full power to regulate by by-laws or otherwise its own procedure and the conduct of all business to be transacted by the Board.

(5) The powers of the Board may be exercised notwithstanding any vacancy in the Board."

Amendment of section 28, Act V of 1923.

5. In section 28 of the said Act,—

(a) for the words "Governor General in Council", in both places where they occur, the word "Board" shall be substituted; and

(b) after clause (a) the following clause shall be inserted, namely:—

"(aa) for prescribing the circumstances in which, the extent to which, and the conditions subject to which variation from the standard conditions laid down under clause (a) may be permitted;".

G. H. SPENCE,

Secy. to the Govt. of India.

GOVERNMENT OF INDIA.

Legislative Department.

The following Act of the Indian Legislature received the assent of the Governor General on the 4th March, 1937, and is hereby promulgated for general information :—

ACT No. IV OF 1937.

An Act further to amend the Indian Income-tax Act, 1922, for certain purposes.

WHEREAS it is expedient further to amend the Indian Income-tax Act, 1922, for the purposes hereinafter appearing ; It is hereby enacted as follows :— XI of 1922.

Short title.

1. This Act may be called the Indian Income-tax (Amendment) Act, 1937.

Amendment of section 16, Act XI of 1922.

2. To section 16 of the Indian Income-tax Act, 1922 (hereinafter referred to as the said Act), the following sub-section shall be added, namely :— XI of 1922.

"(3) In computing the total income of any individual for the purpose of assessment, there shall be included—

(a) so much of the income of a wife or minor child of such individual as arises directly or indirectly—

(i) from the membership of the wife in a firm of which her husband is a partner :

(ii) from the admission of the minor to the benefits of partnership in a firm of which such individual is a partner ;

(iii) from assets transferred directly or indirectly to the wife by the husband otherwise than for adequate consideration or in connection with an agreement to live apart : or

(iv) from assets transferred directly or indirectly to the minor child, not being a married daughter, by such individual : and

(b) so much of the income of any association of individuals consisting of such individual and his wife as arises from assets transferred to the association by such individual."

Amendment of section 18, Act XI of 1922.

3. To sub-section (5) of section 18 of the said Act the following proviso shall be added, namely :—

"Provided further that where such person or owner is a person whose income is included under the provisions of sub-section (3) of section 16 in the total income of another person that person shall be deemed to be the person or owner on whose behalf payment has been made and to whom credit shall be given in the assessment for the following year."

Amendment of section 48, Act XI of 1922.

4. After sub-section (3) of section 48 of the said Act the following sub-section shall be inserted, namely :—

"(3A) Where the shareholder referred to in sub-section (1), or the member of a registered firm or the minor admitted to the benefits of partnership referred to in sub-section (2), or the owner of a security referred to in sub-section (3) is a person whose income is included under the provisions of sub-section (3) of section 16 in the total income of another person, the provisions of sub-sections (1), (2) and (3) shall apply as if that person were himself the persons entitled to a refund under those sub-sections."

Operation of section 2.

5. The amendment made in the said Act by section 2 shall not have effect in respect of any income chargeable to income-tax for any year ending before the 1st day of April, 1937.

G. H. SPENCE,
Secy. to the Govt. of India.

GOVERNMENT OF INDIA.

Legislative Department.

The following Act of the Indian Legislature received the assent of the Governor General on the 4th March, 1937, and is hereby promulgated for general information :—

ACT No. V OF 1937.

An Act further to amend the Indian Lac Cess Act, 1930, for a certain purpose.

WHEREAS it is expedient further to amend the Indian Lac Cess Act, 1930, for the purpose hereinafter appearing ; It is hereby enacted as follows :— XXIV of 1930.

Short title.

1. This Act may be called the Indian Lac Cess (Amendment) Act, 1937.

Amendment of section 4, Act XXIV of 1930.

2. In section 4 of the Indian Lac Cess Act, 1930, for the words " Bihar and Orissa ", where they occur in clause (v) of sub-section (*4*) and in clauses (ii) and (v) of sub-section (*5*), the word " Bihar " shall be substituted. XXIV of 1930.

G. H. SPENCE,

Secy. to the Govt. of India.

Registered No. C207

No. 15 of 1937

The Calcutta Gazette

THURSDAY, APRIL 15, 1937.

CONTENTS:

	Page.
Statement under the Cotton Ginning and Pressing Factories Act, 1925 ..	431
Statements of weekly gauge readings on certain rivers in Bengal	432—433
Monthly Weather and Crop Report of Bengal for March 1937	434
Weather and Crop Report for the week ending the 7th April 1937 ..	435—438
Prices-current (wholesale and retail) of Food-grains, Salt, etc., in the districts of Bengal for the second half of March 1937	439—442
Vital Statistics of towns of Bengal for the weeks ending 20th and 27th March 1937	443—444

SUPPLEMENT.

Official Papers.

FORM C—BENGAL.

STATEMENT OF COTTON PRESSED IN THE BENGAL PRESIDENCY FOR THE WEEK ENDING THE 2nd APRIL 1937.

[Section 5 (2) of the Cotton Ginning and Pressing Factories Act, 1925.]

Name of Division or block.	Number of bales pressed.				District included in the block.
	During the week.	During the corresponding week last year.	Since 1st September 1936 (the date prescribed by the Local Government as the commencement of the season).	During the corresponding period last year.	
The Bengal Presidency	1,614 or 1,599·32 bales of 400 lbs. each.	2,067	23,841	28,998	All districts in the Presidency.

C. S. STEEL,

Chief Inspector of Factories, Bengal (offg.).

Statement of weekly gauge readings on the river Ganges at Rampur Boalia for the week ending the 3rd April 1937.

Date.	Hour.	Height of surface above P. W. D. datum.	Height of surface above P. W. D. datum on the same date last year.	Remarks.
1937.				
28th March	7 a.m.	36·66	34·45	Value of B. M. on Rajshahi College step =64·73 P. W. D. Zero of gauge = 29·26 P. W. D.
29th "	7 "	36·51	34·45	
30th "	7 "	36·36	34·45	
31st "	7 "	36·21	34·50	
1st April	7 "	36·06	34·45	
2nd "	7 "	35·91	34·45	
3rd "	7 "	35·76	34·45	

Highest recorded level on 26-8-1879=64·24.
Lowest recorded level on 24-4-1931=32·05.

S. GUPTA, *Subdivisional Officer,*
Irrigation Department, Rajshahi.

Rampur Boalia, the 3rd April 1937.

Statement showing the gauge readings at Dacca Waterworks Station on the river Buriganga for the week ending 3rd April 1937.

Date.	At highest water.		At lowest water.		Commencement of—		Remarks.	
	Time.	Reading.	Time.	Reading.	Ebb tide.	Flow tide.	7 a.m.	5 p.m.
1937.								
28th March ..	12-0	5·4	18-0	4·7	12-14	18-10	4·95	4·85
29th " ..	13-0	5·0	18-0	4·45	13-12	18-12	4·6	4·6
30th " ..	14-0	4·85	7-0	4·3	14-12	7-14	4·3	4·5
31st " ..	14-30	4·8	7-0	4·05	14-44	7-14	4·05	4·5
1st April ..	15-0	4·6	7-0	3·9	15-12	7-14	3·9	4·4
2nd " ..	16-0	4·5	8-30	3·8	16-12	8-44	3·95	4·35
3rd " ..	17-0	4·45	10-0	3·65	17-14	10-16	4·0	4·45

Notable high and low water-levels of previous years.

		Taken at high tide.			Taken at low tide.
27th August	1906 ..	70·5	23rd February	1907 ..	51·06
5th September	1909 ..	66·86	13th "	1908 ..	51·06
10th August	1910 ..	69·86	12th March	1912 ..	51·06
1st "	1911 ..	68·46	6th "	1914 ..	50·60
13th "	1912 ..	67·16	22nd February	1915 ..	50·30
31st "	1915 ..	69·7	15th "	1916 ..	50·60
8th "	1916 ..	68·1	3rd March	1917 ..	51·0
12th "	1917 ..	67·1	21st February	1918 ..	51·40
13th "	1918 ..	69·12	26th "	1919 ..	50·4
2nd "	1919 ..	66·8	18th "	1920 ..	50·9
8th September	1920 ..	66·9	19th "	1921 ..	50·9
28th July	1921 ..	68·4	8th March	1922 ..	51·05
10th August	1922 ..	68·00	14th "	1923 ..	50·8
31st July	1923 ..	66·15	16th February	1924 ..	50·50
29th August	1924 ..	68·82	5th March	1925 ..	50·9
8th September	1925 ..	68·52	9th February	1926 ..	2·2
15th August	1926 ..	19·6	27th "	1927 ..	2·10
17th September	1927 ..	18·70	16th "	1928 ..	2·2
22nd August	1928 ..	20·0	21st "	1929 ..	2·0
13th July	1929 ..	17·8	24th "	1930 ..	2·3
12th September	1930 ..	18·65	28th "	1931 ..	2·2
16th August	1931 ..	21·7	18th "	1932 ..	1·8
6th September	1932 ..	18·5	6th "	1933 ..	2·10
7th "	1933 ..	17·80	26th March	1934 ..	2·40
23rd August	1934 ..	19·35	15th February	1935 ..	1·70
1st September	1935 ..	19·80	3rd March	1936 ..	1·90
21st August	1936 ..	19·35			

N.B.—Zero of the gauge at Dacca Waterworks prior to 11 a.m. on the 8th January 1926= —48·51 with reference to P. W. D. datum.

Zero of the gauge at Dacca Waterworks since 11 a.m. of the 8th January 1926=0·00 with reference to P. W. D. datum.

M. K. BHATTACHARJEE, *Executive Engineer,*
Khulna Division.

Khulna, the 8th April 1937.

DEPARTMENT OF AGRICULTURE, BENGAL.

Dacca, the 8th April 1937.

Monthly Weather and Crop Report of Bengal for March 1937.

I. *Character of the season.*—During the month under review, the rainfall was below the normal throughout the province. The usual rainfall statement is appended.

II. *Progress of agricultural operations.*—Preparatory tillage for and sowings of jute and paddy continued, but more rain was needed to facilitate the operations and growth of the existing plants. Harvesting of spring crops was nearing completion.

III. *State of standing crops.*—The condition of standing crops was reported as generally fair.

IV. *Prospects and probable outturn.*—The prospects of standing crops were on the whole satisfactory. The outturn of summer rice and tobacco was estimated at 92 and 88 per cent. of the normal, respectively, this year.

V. *Damage to standing crops.*—No appreciable damage to standing crops was reported from any part of the province.

VI. *Condition of agricultural stock.*—The condition of live-stock was, on the whole, fair. Stray cases of cattle disease, however, were reported from thirteen districts of the province.

VII. *Failure of pasturage and fodder.*—Supply of fodder was reported to be sufficient throughout the province.

VIII. *Price of food grains.*—During the second fortnight of the month, the retail prices of common rice of the cheapest quality rose in three districts and fell in seven. The price ranged from 8½ seers per rupee at Darjeeling to 14 seers per rupee at Birbhum, Bankura, Midnapore, Malda and Chittagong Hill Tracts.

IX. *Condition of agricultural population.*—The condition of agricultural population was, on the whole, fair.

M. CARBERY,

Director of Agriculture, Bengal.

Statement showing the normal and actual rainfall in each district during March 1937.

Division.	District.	Normal district rainfall for the month of March.	Actual district rainfall for the month of March 1937.	Variation from the normal.
		Inches.	Inches.	Inches.
Presidency ..	24-Parganas	1·60	0·35	—1·25
	Nadia ..	1·63	0·19	—1·44
	Murshidabad ..	1·02	0·10	—0·92
	Jessore ..	2·01	0·19	—1·82
	Khulna .	2·07	0·08	—1·99
Burdwan ..	Burdwan ..	1·63	0·08	—1·55
	Birbhum ..	0·97	0·05	—0·92
	Bankura ..	1·21	0·01	—1·20
	Midnapore	1·67	0·56	—1·11
	Hooghly .	1·45	0·26	—1·19
	Howrah	1·71	1·74	+0·03
Rajshahi ..	Rajshahi	0·95	Nil	—0·95
	Dinajpur ..	0·82	0·02	—0·80
	Jalpaiguri ..	1·88	0·22	—1·66
	Darjeeling ..	1·71	0·11	—1·60
Rajshahi—*concld.*	Rangpur .	1·16	0·04	—1·12
	Bogra	1·00	N	—1·00
	Pabna ..	1·35	0·20	—1·15
	Malda .	0·73	Nil	—0·73
Dacca ..	Dacca ..	2·64	0·13	—2·51
	Mymensingh ..	1·72	0·11	—1·61
	Faridpur ..	2·29	0·03	—2·26
	Bakarganj ..	2·04	0·52	—1·52
Chittagong ..	Chittagong .	2·18	1·03	—1·15
	Tippera	2·88	0·10	—2·78
	Noakhali .	2·60	1·03	—1·57
	Chittagong Hill Tracts.	2·37	1·45	—0·92
Cooch Behar ..	..	1·58	Nil	—1·58
Tripura State ..	..	3·78	0·42	—3·36

DISTRICT REPORTS ON WEATHER AND CROPS.

For the week ending on the 7th April 1937.

Summary.—During the week light rain fell in a number of places but more rain is needed for the growth of the existing plants and sowings of jute and paddy. Harvesting of *rabi* crops continues. Prospects of standing crops on the whole, fair. The average price of common rice for the province has fallen by about 0·14 per cent. as compared with that of the previous week.

Serial No.	District and sub-division.	Rainfall.	Price of common rice, in seers, per rupee.		Character of the weather, condition of crops, etc.
			This week.	Previous week.	
1	2	3	4	5	6
		Inches.			
1	24-Parganas ..	0·13	10⅝	11½	Weather seasonable. Fodder and water are sufficient. No export or import of paddy is reported.
	Diamond Harbour..	0·10	12	12	
	Barrackpore ..	Nil	12	12	
	Baraset ..	Nil	12	12	
	Basirhat ..	Nil	13	13	
2	Nadia ..	Nil	12 5/16	12 5/16	Weather seasonable. Prospect of standing crops is, on the whole, fair, but in Meherpur it is bad. *Rabi* crops are being harvested. Fodder and water are available. No large import or export.
	Kushtia ..	0·40	11	11	
	Meherpur ..	Nil	10	10	
	Chuadanga ..	Nil	11½	11½	
	Ranaghat ..	Nil	9½	9½	
3	Murshidabad ..	0·07	12½	12½	Weather seasonable. Prospects of crops are favourable. Fodder and water are sufficient. No large import or export. Stock of rice is sufficient. Cattle-disease is reported from Kandi subdivision
	Lalbagh ..	Nil	13	13	
	Jangipur ..	Nil	13½	13	
	Kandi ..	Nil	14	14	
4	Jessore ..	Nil	11½	11½	Weather seasonable. Prospects of standing crops are fair. No large export or import. Fodder and water are sufficient. Cattle-disease is reported from Magura police-station.
	Jhenidah ..	Nil	12	12	
	Magura ..	Nil	11	11	
	Narail ..	0·84	11	11	
	Bongaon ..	Nil	12	12	
5	Khulna ..	0·25	13	13	Weather seasonable. Fodder and water are sufficient.
	Satkhira ..	Nil	13	(*n*)	
	Bagerhat ..	Nil	10½	11	

(*n*) Not reported.

Serial No.	District and sub-division.	Rainfall.	Price of common rice, in seers, per rupee.		Character of the weather, condition of crops, etc.
			This week.	Previous week.	
1	2	3	4	5	6
		Inches.			
6	Burdwan ..	0·18	12½	13	Weather seasonable. Condition of crop is fair. Fodder and water are sufficient.
	Asansol ..	Nil	12	10*	
	Katwa ..	0·20	13	13	
	Kalna ..	Nil	11½	11½	
7	Birbhum ..	0·17	14	14	Weather seasonable. Prospects of standing crops are good. Fodder and water are sufficient.
	Rampurhat ..	0·40	13	13	
8	Bankura ..	0·09	13	13	Weather seasonable. Lands are being manured. Prospects of standing crops are good. No large export or import. Fodder and water are sufficient. Cattle-disease is reported from Gangajalghati thana.
	Vishnupur ..	1·30	13¾	13¾	
9	Midnapore ..	Nil	13	13	Scarcity of water is felt in Tamluk, Panskura and Moyna thanas.
	Contai ..	Nil	15	14	
	Tamluk ..	Nil	13	13	
	Ghatal ..	Nil	14½	14½	
	Jhargram ..	0·23	13	13	
10	Hooghly ..	0·20	10½	10½	Weather seasonable. Fodder and water are sufficient.
	Serampore ..	Nil	10½	10½	
	Arambagh ..	Nil	11	11	
11	Howrah ..	0·16	10	10	Weather seasonable. Its effects are good. Fodder and water are sufficient.
	Uluberia ..	0·12	10	10	
12	Rajshahi (Rampur-Boalia).	Nil	10	10	Weather seasonable. Sowing of jute and *aus* crops has begun. Fodder and water are sufficient.
	Naogaon ..	Nil	11½	11½	
	Nator ..	Nil	10½	10½	
13	Dinajpur ..	0·03	10	10	Weather seasonable. Fodder and water are sufficient Cattle-disease is reported from Birganj and Khansama thanas.
	Thakurgaon ..	0·25	13	13	
	Balurghat ..	Nil	13 5/16	13 5/16	
14	Jalpaiguri ..	0·17	13	13	Weather seasonable. Prospects of standing crops are fair. Fodder and water are sufficient.
	Alipur ..	0·32	11	11	

* Old.

Serial No.	District and sub-division.	Rainfall.	Price of common rice, in seers, per rupee. This week.	Previous week.	Character of the weather, condition of crops, etc.
1	2	3	4	5	6
		Inches.			
15	Darjeeling ..	0·95	8	8	Sowing of *bhutti* progressing. Fodder and water are sufficient.
	Kurseong ..	Nil	9	9	
	Siliguri ..	0·25	11½	12	
	Kalimpong ..	0·76	7¾	7½	
16	Rangpur ..	0·14	11½	11½	Weather seasonable. Prospects of standing crops are fair. No large export or import. Fodder and water are sufficient. Sowing of *aus* paddy and jute continues. More rain is wanted. Cattle-diseases reported from Kotwali and Pirgacha thanas.
	Nilphamari ..	0·20	11	11	
	Kurigram ..	0·38	10	10	
	Gaibandha ..	Nil	10	(*n*)	
17	Bogra ..	Nil	12¾	12¾	Agricultural operation not affected by weather condition. Ploughing and sowing going on as usual. Rain is needed for growing of jute and *aus* paddy. Condition of standing crops is fair. Fodder and water are sufficient. No damage is reported.
18	Pabna ..	0·10	12	12	Weather seasonable. Condition of standing crops is good. Fodder and water are sufficient.
	Serajganj ..	Nil	10 5/16	10½	
19	Malda ..	0·02	13	12½	Weather seasonable. Harvesting of *rabi* crops continues. Fodder and water are available.
20	Cooch Behar ..	(*n*)	(*n*)	(*n*)	Report not received.
21	Dacca ..	Nil	10½	10¾	Rainfall at North Sadar (Kapasia) nil inches. Weather seasonable. Prospects of standing crops are reported to be fair. No large export or import. Fodder and water are available. Cattle-disease exists in Munshiganj subdivision.
	Manikganj ..	Nil	10½	10½	
	Narayanganj ..	0·02	12	12	
	Munshiganj ..	Nil	11	10¾	

(*n*) Not reported.

Serial No.	District and sub-division.	Rainfall.	Price of common rice, in seers, per rupee.		Character of the weather, condition of crops, etc.
			This week.	Previous week.	
1	2	3	4	5	6
		Inches.			
22	Mymensingh ..	Nil	11½	10½	Weather seasonable. Condition of crop is fair. Agricultural operation is normal. Fodder and water are available.
	Jamalpur ..	Nil	11½	11½	
	Tangail ..	0·45	11	11	
	Netrakona ..	Nil	12¼	12¼	
	Kishorganj ..	0·03	10½	10½	
23	Faridpur ..	Nil	12	12	Weather seasonable. Condition of standing crops is fair. Fodder and water are sufficient.
	Goalundo (Rajbari)	0·15	10½	10½	
	Madaripur ..	Nil	11¼	11½	
	Gopalganj (a) ..	Nil	11	11	
24	Bakarganj (Barisal)	1·02	11	11	Weather seasonable. Prospects of standing crops are not bad in Sadar, good in Pirojpur and Patuakhali and fair in Bhola. Fodder and water are sufficient. Cattle-disease is reported from Bhola subdivision.
	Pirojpur ..	Nil	11¼	11¼	
	Patuakhali ..	Nil	10½	10½	
	Dakshin Shabazpur (Bhola).	0·40	11	11	
25	Chittagong ..	1·91	10 11*	11 12*	Harvesting of *rabi* crops is in progress. Fodder and water are sufficient. Cattle-disease exists in places. Panga salt sells at 14 seers at Sadar.
	Cox's Bazar ..	(n)	(n)	12	
26	Tippera (Comilla) ..	Nil	13	13¼	Prospects of standing crops are fair. Cattle-disease is reported from Nasirnagore.
	Brahmanbaria ..	0·51	13	13	
	Chandpur ..	Nil	12	12	
27	Noakhali ..	Nil	12	12	Fodder and water are sufficient. Cattle-disease still exists in Feni subdivision.
	Feni ..	2·47	13	13	
28	Chittagong Hill Tracts.	0·56	14	14	Weather seasonable.
29	Tripura State ..	(n)	(n)	(n)	Reports not received.

(a) The rainfall at Haridaspur, which is very near to Gopalganj, is shown here.

(n) Not reported. * Burma rice.

S. ABDULLAH, for *Director of Agriculture, Bengal.*

Dacca, the 10th April 1937.

Wholesale prices current of food grains, gur, etc., in the undermentioned marts of Bengal for the second half of March 1937.

Marts.	Paddy local (best quality).			Paddy local (common quality).			Rice local (best quality).		
	Present return.	Next preceding return.	Corresponding return of last year.	Present return.	Next preceding return.	Corresponding return of last year.	Present return.	Next preceding return.	Corresponding return of last year.
1	2	3	4	5	6	7	8	9	10
	Rs. a. p.	Rs. a. p.	Rs. a. p.	Rs. a. p.	Rs. a. p.	Rs. a. p.	Rs. a. p.	Rs. a. p.	Rs. a. p.
Calcutta	2 4 0	2 4 0	3 0 0	2 0 0	1 14 0	2 8 0	4 12 0	4 12 0	5 0 0
Burdwan	1 12 0	1 12 0	2 4 0	1 9 0	1 9 0	2 2 0	4 6 0	4 4 0	4 11 0
Midnapore	1 8 0	1 8 0	2 5 0	1 6 6	1 6 6	1 13 0	3 6 0	3 6 0	4 4 0
Chittagong	1 12 0	1 12 0	1 14 0	1 11 0	1 11 0	1 13 0	4 4 0	4 4 0	4 8 0
Dacca	2 4 0	2 4 0	2 4 0	2 0 0	2 0 0	2 2 0	4 0 0	4 0 0	3 11 0
Pabna	2 4 0	2 4 0	2 4 0	2 0 0	2 2 0	1 12 0	3 12 0	3 14 0	4 8 0
Rangpur	1 12 0	1 12 0	1 14 0	1 10 0	1 10 0	1 10 0	4 8 0	4 8 0	4 8 0
Serajganj (Pabna)	..	..	..	..	..	..	..	..	..
Sarisabari (Mymensingh) ..	..	..	..	..	..	..	..	..	..
Narayanganj (Dacca)	..	..	..	..	..	..	..	..	..

Marts.	Rice local (common quality).			Wheat.			Raw cotton.		
	Present return.	Next preceding return.	Corresponding return of last year.	Present return.	Next preceding return.	Corresponding return of last year.	Present return.	Next preceding return.	Corresponding return of last year.
	11	12	13	14	15	16	17	18	19
	Rs. a. p.	Rs. a. p.	Rs. a. p.	Rs. a. p.	Rs. a. p.	Rs. a. p.	Rs. a. p.	Rs. a. p.	Rs. a. p.
Calcutta	4 2 0	4 4 0	4 11 0	4 6 0	4 4 0	3 7 0	22 10 0	21 6 0	17 4 0
Burdwan	4 0 0	4 0 0	3 12 0	..	..	..	..	..	..
Midnapore	2 11 0	2 11 0	3 5 6	..	..	..	..	..	..
Chittagong	3 4 0	3 4 0	3 10 0	..	..	..	..	..	..
Dacca	3 12 0	3 10 0	3 5 0	..	..	..	..	..	..
Pabna	3 5 6	3 6 0	3 10 0	..	..	..	..	..	..
Rangpur	3 8 0	3 8 0	3 12 0	..	..	..	..	..	..
Serajganj (Pabna)	..	..	..	..	..	..	..	..	..
Sarisabari (Mymensingh) ..	..	..	..	..	..	..	..	..	..
Narayanganj (Dacca)	..	..	..	..	..	..	..	..	..

Marts.	Coal.			Raw jute (weighted average).			Gur (sugarcane).		
	Present return.	Next preceding return.	Corresponding return of last year.	Present return.	Next preceding return.	Corresponding return of last year.	Present return.	Next preceding return.	Corresponding return of last year.
	20	21	22	23	24	25	26	27	28
	Rs. a. p.	Rs. a. p.	Rs. a. p.	Rs. a. p.	Rs. a. p.	Rs. a. p.	Rs. a. p.	Rs. a. p.	Rs. a. p.
Calcutta	0 8 0	0 8 6	0 6 6	6 0 0	5 14 0	6 8 0	3 4 0	3 0 0	3 0 0
Burdwan	..	..	..	..	..	..	3 14 0	4 0 0	4 2 0
Midnapore	..	..	..	..	..	..	3 12 0	3 12 0	4 8 0
Chittagong	..	..	..	..	..	..	4 8 0	4 8 0	4 0 0
Dacca	..	..	..	..	..	..	3 8 0	3 8 0	4 0 0
Pabna	..	..	..	..	..	..	2 0 0	2 0 0	3 0 0
Rangpur	..	..	..	..	..	..	3 8 0 to 4 0 0	3 8 0 to 4 0 0	3 14 0 to 4 0 0
Serajganj (Pabna)	..	..	..	5 0 0	5 0 0	5 4 0	..	..	..
Sarisabari (Mymensingh) ..	..	..	..	4 15 0 to 6 7 0	4 14 0 to 6 4 0	4 6 0 to 6 14 0	..	..	..
Narayanganj (Dacca)	..	..	..	4 14 0 to 5 12 0	5 4 0 to 5 14 0	4 12 0 to 6 0 0	..	..	..

Dacca, the 9th April 1937.

S. ABDULLAH, for *Director of Agriculture, Bengal.*

Prices-current (retail) of common rice and salt in the districts of Bengal for the second half of March 1937.

Districts and Marts.	Quantity per rupee in seers of eighty tolas.								
	Common rice.						Salt.		
	Average.			Cheapest.					
	Present return.	Next preceding return.	Corresponding return of last year.	Present return.	Next preceding return.	Corresponding return of last year.	Present return.	Next preceding return.	Corresponding return of last year.
	S. CH.	S. CH.	S. CH.	S. CH.	S. CH.	S. CH.	S. CH.	S. CH.	S. CH.
PRESIDENCY DIVISION.									
24-Parganas—									
1 Chetla Hat ..	11 5	10 8	10 0	13 0	11 8	11 8	16 8C	16 0C	18 0
2 Mogra Hat ..	(a) 12 0	(a) 11 12	10 5	(a) 14 0	(a) 14 4	11 6	16 0C 15 0K	16 0C 15 0K	16 0
3 Calcutta-Beliaghata	10 0	9 12	8 8	11 0	10 0	9 0	19 2C 17 0K 15 14P	19 2C 17 0K 15 14P	16 0
Nadia—									
4 Goari	12 5	11 13	9 12	(a) 13 0	(a) 13 0	12 5	14 0P 14 0K	14 0P 14 0K	14 0P 14 0K
5 Ranaghat ..	9 8	9 8	10 0	11 12	11 12	12 8	14 0P 14 0K	14 0P 14 0K	14 0P 14 0K
Murshidabad—									
6 Berhampore ..	12 0	12 0	11 0	12 8	12 8	11 3	14 0K	14 0K	14 0K
7 Kandi	(a) 14 0	(a) 14 0	11 4	(a) 14 12	(a) 14 8	11 8	13 0K 13 0B	13 0K 13 0B	14 8
8 Jangipur ..	12 8	12 8	11 0	(a) 13 8	(a) 13 0	11 8	16 0K	16 0K	16 0
Jessore—									
9 Sadar	11 8	11 8	11 0	12 8	12 8	12 8	16 0P 15 0K	15 0P 15 0K	15 0P 14 0K
10 Bongaon ..	10 0	9 8	10 0	12 0	11 8	12 8	14 8P 15 0K	14 8P 15 0K	14 8P 15 0K
Khulna—									
11 Sadar	(a) 10 8	(a) 11 0	11 0	(a) 13 0	(a) 14 0	13 4	16 0C 16 0K	16 0C 16 0K	16 0C 16 0K
12 Bagerhat ..	11 0	11 0	10 8	12 0	12 0	11 8	15 0K	15 0K	15 0K
BURDWAN DIVISION.									
Burdwan—									
13 Sadar ..	10 0	9 6	10 4	10 8	9 10	11 0	13 0C 13 0K	13 0C 13 0K	14 8C 14 8K
14 Kalna ..	(a) 11 4	11 4	9 6	(a) 12 8	12 8	10 0	18 0K	18 0K	16 0
Birbhum—									
15 Suri	13 0	13 0	11 0	14 0	13 8	11 8	14 0M	14 0M	14 0
16 Rampurhat ..	13 0	13 0	10 8	14 0	14 0	11 0	16 0C	16 0C	16 0
Bankura—									
17 Sadar	(a) 13 0	(a) 13 0	10 8	(a) 14 0	(a) 14 0	11 0	14 0P	14 0P	14 0P
18 Vishnupur ..	13 12	13 10	10 8	(a) 15 0	(a) 14 10	11 0	13 0P	13 0P	13 0P

P—Panga. K—Karkach. B—Bombay. C—Crushed. F—Foreign.

N.B.—The prices of Karkach and Liverpool salt tally with each other in marts marked†.

(a) New. M—Madras.

Prices-current (retail) of common rice and salt in the districts of Bengal for the second half of March 1937.

Districts and Marts.	Quantity per rupee in seers of eighty tolas.								
	Common rice.						Salt.		
	Average.			Cheapest.					
	Present return.	Next preceding return.	Corresponding return of last year.	Present return.	Next preceding return.	Corresponding return of last year.	Present return.	Next preceding return.	Corresponding return of last year.
	S. CH.	S. CH.	S. CH.	S. CH.	S. CH.	S. CH.	S. CH.	S. CH.	S. CH.
BURDWAN DIVISION— *concld.*									
Midnapore—									
19 Sadar	13 0	13 0	12 6	14 0	14 0	13 1	14 0L	14 0L	14 0L
20 Contai	(a) 14 0	(a) 14 0	11 0	(a) 16 0	(a) 16 0	12 0	(b) 32 0C	(b) 21 0C	32 0
Hooghly—									
21 Sadar	10 8	10 0	10 0	11 8	11 0	11 4	16 0P	16 0P	16 0P
22 Arambagh ..	11 0	11 0	10 8	11 8	11 8	11 0	16 0P 15 0K	16 0P 15 0K	15 8P 15 0K
Howrah—									
23 Sadar ..	9 0	10 0	9 0	11 8	11 4	11 0	16 0C 13 0K	16 0C 13 0K	16 0C 12 0K
24 Uluberia ..	10 0	10 0	10 0	12 0	11 8	11 0	16 0C 13 4K	16 0C 13 4K	16 0C 14 0K
RAJSHAHI DIVISION.									
Rajshahi—									
25 Rampur-Boalia ..	12 0	(a) 12 0	10 8	13 0	(a) 13 0	12 0	13 8P 13 8K	14 0P 14 0K	12 0P 12 0K
26 Nator .. .	10 8	10 8	10 8	12 12	12 12	12 12	12 0C 12 0K	12 0C 12 0K	12 0L 12 12K
27 Dinajpur—Railbazar Hat.	9 0	9 0	12 8	12 0	10 12	13 0	10 0C	10 0K	10 0C 12 0K
28 Jalpaiguri—Sadar ..	(a) 12 0	(a) 12 0	12 0	(a) 13 0	(a) 13 0	14 0	13 0C	13 0C	13 0
Darjeeling—									
29 Sadar	7 8	7 8	9 8	8 8	8 8	10 0	10 8P 10 0K	10 8P 10 0K	10 0P 9 0K
30 Siliguri ..	11 8	12 0	11 8	12 8	13 0	12 0	12 0P 12 0K 12 0C	12 0P 12 0K 12 0C	12 0‡
Rangpur—									
31 Sadar	(a) 12 15	(a) 12 15	11 13	12 15	(a) 12 15	11 13	13 8P	13 8P	13 8P
32 Nilphamari ..	(a) 12 8	(a) 12 8	12 0	12 10	(a) 12 10	13 0	12 8K	12 8K	12 8K
33 Bogra—Sadar ..	(a) 12 12	(a) 12 12	12 0	(a) 13 2	(a) 13 2	12 6	12 0C	12 0C	12 0C
Pabna—									
34 Sadar	(a) 12 0	(a) 12 0	11 8	(a) 12 8	(a) 12 8	12 0	14 8L 14 8K	14 8L 14 8K	14 0L 14 0K
35 Serajganj ..	10 8	10 8	12 4	11 0	11 0	12 8	16 0L 15 0K	16 0L 15 0K	16 0 15 0K
Malda—									
36 Sadar	(a) 13 0	(a) 12 0	11 8	(a) 14 0	(a) 13 0	12 0	14 0OK 13 0K	15 0OK 14 8K	14 8C 14 0K
37 Balia—Nawabganj	(a) 13 12	(a) 13 2	12 8	(a) 15 0	(a) 14 0	13 0	15 0OK 14 0K	15 0OK 14 0K	15 0C 13 12K

P—Panga. K—Karkach. C—Crushed. L—Liverpool.

‡ Prices of Karkach, Crushed and Panga salt tally with each other.

(a) New. OK—Okha and other Indian varieties. (b) Profuse supply.

Prices-current (retail) of common rice and salt in the districts of Bengal for the second half of March 1937.

Districts and Marts.	Quantity per rupee in seers of eighty tolas.								
	Common rice.						Salt.		
	Average.			Cheapest.					
	Present return.	Next preceding return.	Corresponding return of last year.	Present return.	Next preceding return.	Corresponding return of last year.	Present return.	Next preceding return.	Corresponding return of last year.
	S. CH.	S. CH.	S. CH.	S. CH.	S. CH.	S. CH.	S. CH.	S. CH.	S. CH.
DACCA DIVISION.									
Dacca—									
38 Sadar ..	10 0	10 0	10 12	10 12	11 0	12 0	13 0C 13 0K	13 0C 13 0K	13 0C 13 0K
39 Mirkadim ..	11 0	10 12	11 0	11 8	11 8	11 8	15 0K	15 0K	14 8K
Mymensingh—									
40 Nasirabad ..	9 12	9 12	10 4	10 6	10 6	10 8	13 10L 13 10K	13 10L 13 10K	13 0K
41 Netrakona ..	(a) 12 4	(a) 12 0	13 0	(a) 12 12	(a) 13 0	13 12	13 4L 13 0K	13 4L 13 0K	13 10L 13 4K
Faridpur—									
42 Sadar ..	12 0	12 0	11 12	12 8	12 8	12 4	12 0K	12 0K	13 0K
43 Rajbari ..	10 8	10 8	10 8	12 8	12 8	12 8	12 0C	12 0C	12 0C
Bakarganj—									
44 Barisal ..	(a) 10 10	10 12	11 4	(a) 11 8	11 8	12 0	15 0C 15 0K	17 0C 16 15K	14 0K
45 Perojpur ..	(a) 11 4	(a) 11 4	11 8	(a) 11 12	11 10	11 10	13 0C 13 0K	13 0C 13 0K	14 0C 14 0K
CHITTAGONG DIVISION.									
Tippera—									
46 Comilla ..	(a) 12 5	(a) 12 5	10 11	(a) 13 6	(a) 13 6	11 7	14 8C	14 8C	12 13L 10 10K
47 Chandpur ..	11 4	11 8	12 8	12 8	12 8	13 5	16 0C	16 0C	15 0
Noakhali—									
48 Kalitara Hat ..	10 0	10 0	10 0	12 0	12 0	11 0	13 0C 10 8K	13 0C 10 8K	13 0C 10 8K
49 Feni Hat ..	(a) 13 0	(a) 13 0	11 4	(a) 13 8	(a) 13 8	12 12	12 8C 10 8K	12 8C 10 8K	12 12C 10 0K
Chittagong—									
50 Sadar ..	10 0	10 0	9 0	11 8	11 8	11 2	13 0P	13 0P	13 0P
51 Cox's Bazar ..	10 8	10 8	10 0	11 8	11 8	13 0	13 0P	13 0P	13 0P
52 Chittagong Hill Tracts—Rangamati.	13 0	13 0	12 0	14 0	15 0	13 8	13 0L 8 0K	13 0L 8 0K	12 0L 6 4K

P—Panga. C—Crushed. K—Karkach. L—Liverpool.

N.B.—The prices of Karkach and Liverpool salt tally with each other in marts marked †.

(a) New.

Dacca, the 9th April 1937.

S. ABDULLAH, for *Director of Agriculture Bengal.*

Vital statistics of towns with a population of 50,000 and over of the Bengal Presidency for the week ending Saturday, the 20th March 1937.

Districts.	Nos.	Towns.	Population under registration according to census of 1931.			Births registered.		Deaths registered.																							
			Male.	Female.	Total.	Number registered (excluding still-births).	Still-births registered.	Cholera.	Small-pox.	Plague.	Malaria.	Enteric fever.	Measles.	Relapsing fever (Spirochaetal).	Kala-azar.	Influenza.	Cerebro-spinal fever.	Other fevers.	Dysentery.	Diarrhœa.	Pneumonia.	Pulmonary tuberculosis.	Other respiratory diseases.	Injuries including suicide.	Deaths from child-birth.	Other causes.	Total of all causes. Male.	Total of all causes. Female.	Total of all causes. Total.	Total of corresponding week of the previous year. Male.	Total of corresponding week of the previous year. Female.	Total of corresponding week of the previous year. Total.
Calcutta ..	1	Calcutta ..	778,817	362,045	1,140,862	456	36	11	13	..	13	17	9	..	3	2	15	11	21	11	48	60	86	14	2	252	314	274	588	587	461	1,048
Burdwan ..	2	Asansol Mining Settlement.	209,544	173,136	382,680	113	1	..	1	..	..	1	..	..	..	..	..	19	1	..	3	..	4	..	3	25	25	32	57	95	79	174
Howrah ..	3	Howrah ..	145,120	79,753	224,873	138	2	2	..	..	..	1	..	..	..	..	..	..	11	5	12	11	16	..	1	44	58	45	103	153	126	279
Dacca ..	4	Dacca ..	79,365	59,153	138,518	137	3	2	..	..	..	3	2	..	2	..	..	1	2	..	23	2	19	..	..	33	58	31	89	60	46	106
24-Parganas	5	Bhatpara ..	60,134	24,841	84,975	29	2	..	..	..	..	..	1	..	..	..	..	12	1	2	..	..	1	..	..	8	13	12	25	9	11	20
	6	Garden Reach.	36,131	19,741	55,872	21	..	..	..	..	2	..	..	..	..	..	..	..	..	..	1	1	..	..	..	5	2	7	9	13	2	15
Chittagong ..	7	Chittagong	35,049	18,107	53,156	Not received.																								2	8	10

A. C. CHATTERJI, M.B., D.P.H., LT.-COL., I.M.S., *Director of Public Health, Bengal.*

Calcutta, the 3rd April 1937.

Vital statistics of towns with a population of 50,000 and over of the Bengal Presidency for the week ending Saturday, the 27th March 1937.

Districts.	Nos.	Towns.	Population under registration according to census of 1931.			Births registered		Deaths registered.																								
			Male.	Female.	Total.	Number registered (excluding still-births).	Still-births registered.	Cholera.	Small-pox.	Plague.	Malaria.	Enteric fever.	Measles.	Relapsing fever. (Spirochaetal).	Kala-azar.	Influenza.	Cerebro-spinal fever.	Other fevers.	Dysentery.	Diarrhœa.	Pneumonia.	Pulmonary tuberculosis.	Other respiratory diseases.	Injuries including suicide.	Deaths from child-birth.	Other causes.	Total of all causes.			Total of corresponding week of the previous year.		
																											Male.	Female.	Total.	Male.	Female.	Total.
Calcutta ..	1	Calcutta ..	778,817	362,045	1,140,862	462	46	14	16	..	10	18	5	.	..	5	17	17	27	5	50	70	81	7	1	217	293	267	560	555	488	1,043
Burdwan ..	2	Asansol Mining Settlement.	209,544	173,136	382,680	252	1	3	2	..	2	2	..	..	..	..	..	60	4	2	10	..	4	3	..	46	78	60	138	74	62	136
Howrah ..	3	Howrah ..	145,120	79,753	224,873	80	4	2	3	..	2	2	..	..	..	..	..	..	7	7	26	6	26	3	..	41	62	63	125	119	114	[illegible]
Dacca ..	4	Dacca ..	79,365	59,153	138,518	84	3	5	..	..	..	1	2	..	..	..	..	7	2	3	7	2	6	..	2	20	25	32	57	67	52	119
24-Parganas	5	Bhatpara ..	60,134	24,841	84,975	17	..	..	..	..	..	2	..	..	..	..	..	4	1	3	3	2	..	..	1	4	2	18	20	46	[illegible]	79
	6	Garden Reach	36,131	19,741	55,872	15	1	..	..	..	2	..	..	..	..	1	..	2	1	1	..	..	..	..	..	2	6	3	9	14	8	22
Chittagong ..	7	Chittagong ..	35,049	18,107	53,156	7	1	2	2	..	..	..	..	..	..	..	..	4	3	..	1	..	1	..	..	8	12	9	21	5	5	10

Calcutta, the 3rd April 1937.

A. C. CHATTERJI, M.B., D.P.H., LT.-COL., I.M.S., *Director of Public Health, Bengal.*

Printed and published by the Superintendent, Government Printing, Bengal Government Press, Alipore, Bengal, on the 15th April 1937.

Registered No. C207

No. 16 of 1937

The Calcutta Gazette

Published by Authority

THURSDAY, APRIL 22, 1937.

CONTENTS:

	Page.
PART I.—Orders and Notifications by the Governor of Bengal, the Government of Bengal, the High Court, Government Treasury, etc.	903—973
PART IA.—Orders and Notifications by the Government of India republished for general information	931—933
PART IB.—Educational Notices ..	433—468
PART II.—Advertisements	375—388
PART III.—Acts of the Bengal Legislative Council	*Nil*
PART IV.—Bills introduced in the Bengal Legislative Council, Reports of Select Committees presented or to be presented to that Council and Bills published before introduction in that Council ..	*Nil*
PART V.—Acts of the Indian Legislature assented to by the Governor-General and Ordinances promulgated under section 72 of the Government of India Act—	
The Code of Civil Procedure (Amendment) Act, 1937	19—20
The Code of Civil Procedure (Second Amendment) Act, 1937	21
The Contempt of Courts (Amendment) Act, 1937	22
PART VI.—Bills introduced in the Council of State and Legislative Assembly, Reports of Select Committees presented to the Council and Assembly and Bills published under rule 18 of the Indian Legislative Rules—	
The Code of Civil Procedure (Third Amendment) Bill, 1937, with Statement of Objects and Reasons ..	89—90
The Indian Soft Coke Cess (Reconstitution of Committee) Bill, 1937, with Statement of Objects and Reasons ..	91—92
SUPPLEMENT No. 16:—	
Cotton Ginning and Pressing—Monthly Return of Vital Statistics—Weekly Gauge Readings—Weekly Weather and Crop Report—Weekly Vital Statistics—River water levels—Corporation of Calcutta Notices	445—461
Third Forecast of the Wheat Crop of Bengal, 1936-37	461—462
Resolution on the Report on the Administration of the Excise Department in the Presidency of Bengal for the year 1935-36	463—464

PART I

Orders and Notifications by the Governor of Bengal, the Government of Bengal, the High Court, Government Treasury, etc.

HOME DEPARTMENT.

Appointment.

No. 4459A.

APPOINTMENTS AND TRANSFERS.

General.

Calcutta.—No. 4245A.—1st April 1937.—Mr J. B. Kindersley, I.C.S., Secretary to the Government of Bengal, Revenue Department, is also appointed to be Secretary, Forest and Excise Department.

Calcutta.—No. 4249A.—1st April 1937.—Mr. E. W. Holland, I.C.S., is appointed to act, until further orders, as Joint Secretary to the Government of Bengal in the Co-operative Credit and Rural Indebtedness Department.

Dacca-Rangpur.—No. 4190A.—9th April 1937.—Babu Durgasiva Prasad Mukharji, Deputy Magistrate and Deputy Collector, Dacca, is appointed to have charge of the Nilphamari subdivision of the Rangpur district.

Noakhali-Chittagong.—No. 4265A. — 12th April 1937.—Babu Pramod Lal Dhar, Deputy Magistrate and Deputy Collector, Noakhali, is transferred to the headquarters station of the Chittagong district.

Chittagong.-Noakhali.—No. 4268A. — 12th April 1937.—Babu Suresh Chandra Das Gupta, Deputy Magistrate and Deputy Collector, Chittagong, is transferred to the headquarters station of the Noakhali district.

Chittagong.—No. 4296A.—15th April 1937. —The orders of the 30th December 1936, posting Maulvi Muhammad Shamsul Hoque, Sub-Deputy Collector, on probation, to the headquarters station of the Chittagong district, are cancelled.

Bogra-Rangpur.—No. 4298A. —15th April 1937.—The Sub-Deputy Collectors, on probation, named below, are posted to the headquarters station of the districts mentioned opposite their names:—

Maulvi Saiyid Muhammad Hammad Ali—Bogra.

Maulvi Saiyid Ahmad Chaudhuri—Rangpur.

Chittagong-Rangpur.—No. 4312A.— 15th April 1937.—Maulvi Abdur Rahman Khan, Deputy Magistrate and Deputy Collector, on probation, is posted to the headquarters station of the Rangpur district, on being relieved of his present appointment as Khas Tahsildar, Chittagong.

Calcutta.—No. 4355A.—16th April 1937.—Mr. O. M. Martin, C.I.E., I.C.S., Secretary to the Government of Bengal, Revenue Department, is also appointed to be Secretary, Forest and Excise Department.

Rajshahi.—No. 4379A.—17th April 1937.—Babu Jogendra Nath Maitra, Deputy Magistrate and Deputy Collector, on probation, on leave, is posted to the headquarters station of the Rajshahi district.

Jessore.—No. 4405A. —19th April 1937.—The orders of the 24th February 1937, posting Maulvi Mahmud Ahmad, Deputy Magistrate and Deputy Collector, on leave, to the headquarters station of the Jessore district, are cancelled.

Police.

Dacca.—No. 4321A. — 15th April 1937.—Mr. S. N. Chatarji, I.P., officiating Additional Superintendent of Police, Dacca, is appointed to act, until further orders, as Additional Superintendent of Police, District Intelligence Branch of that district.

Mymensingh-Dacca.—No. 4323A. — 15th April 1937.—Mr. J. M. G. Cook, I.P., officiating Additional Superintendent of Police, Mymensingh, is appointed to act, until further orders, as Additional Superintendent of Police, Dacca.

Dacca-Mymensingh. — No. 4326A. —15th April 1937. — Maulvi Arifuddin Ahmad Qadiri, Deputy Superintendent of Police, Narayanganj, Dacca, is appointed to act, until further orders, as Additional Superintendent of Police, Mymensingh, and, under the provisions of section 1 of Act V of 1861, to perform the duties of a Superintendent of Police in that district.

Mymensingh-Dacca. — No. 4329A. — 15th April 1937.—Mr. J. E. Adams, I.P., Assistant Superintendent of Police, Tangail, Mymensingh, is transferred to the Narayanganj subdivision of the Dacca district and is placed in charge of the police work of both Narayanganj and Munshiganj subdivisions of that district.

Bankura-Mymensingh.—No. 4332A.—15th April 1937.—Mr. Kazi Anwarul Huque, I.P., Assistant Superintendent of Police, Bankura, is transferred to the Tangail subdivision of the Mymensingh district and is placed in charge of the police work of that subdivision.

Ecclesiastical.

Calcutta.—No. 4351A.—16th April 1937.—The Reverend Canon P. Higham, Metropolitan's Chaplain, is appointed to act, until further orders, as Archdeacon of Calcutta, with effect from the 21st May 1937, or any subsequent date on which he may take over charge of his duties.

Calcutta.—No. 4388A.—17th April 1937.—The Reverend G. M. Scott, Junior Chaplain, St Paul's Cathedral, Calcutta, is appointed to be Chaplain of Presidency General Hospital, in addition to his own duties, with effect from the 16th April 1937, or any subsequent date on which he may take over charge of his duties.

LEAVE.

General.

No. 4199A.—10th April 1937.—Mr. P. J. Griffiths, I.C.S., is allowed leave on average pay for four months, under rules 81 (*b*)-(*i*) of the Fundamental Rules, with effect from the 9th April 1937.

Nadia.—No. 4237A.—10th April 1937.—Maulvi Mirza Yahya Shirazi, Deputy Magistrate and Deputy Collector, Chuadanga, Nadia, is allowed leave on average pay for eight months, under the proviso to rule 81 (*b*) (*ii*) of the Fundamental Rules, with effect from the 16th January 1937.

24-Parganas.—No. 4255A.—12th April 1937.—Mr Hubert Graham, I.C.S., Magistrate and Collector, 24-Parganas, is allowed leave for eleven months, viz., leave on average pay for one month and nineteen days, under rule 81 (*b*) (*i*) of the Fundamental Rules, with effect from the 1st May 1937, and leave on half average pay for the remaining period, under rule 81 (*d*) of those Rules.

Rangpur.—No. 4262A.—12th April 1937.—Rai Sahib Shashi Bhusan Bhattacharji, Deputy Magistrate and Deputy Collector, Nilphamari, Rangpur, is allowed leave on average pay from the 2nd April 1937 to the 18th July 1937, inclusive, under rule 81 (*b*) (*ii*) of the Fundamental Rules.

Dacca.—No. 4273A.—13th April 1937.—Mr. Premananda Nag, Deputy Magistrate and Deputy Collector, Dacca, was allowed leave on average pay from the 16th March 1937 to the 10th April 1937, inclusive, under rule 81 (*b*) (*ii*) of the Fundamental Rules.

No. 4289A.—15th April 1937.—Rai Nripendra Chandra Bose Bahadur, Deputy Magistrate and Deputy Collector, is allowed leave on average pay for four months, under rule 81 (*b*) (*ii*) of the Fundamental Rules, with effect from the 27th April 1937, or any subsequent date on which he may avail himself of it.

Rajshahi.—No. 4302A.—15th April 1937.—Maulvi Saiyid Abu Saiyid, Sub-Deputy Collector, Naogaon, Rajshahi, is allowed leave on average pay for four months, under rule 81 (*b*) (*ii*) of the Fundamental Rules, with effect from the 10th March 1937.

Pabna.—No. 4316A.—15th April 1937.—Babu Satyendra Nath Batabyal, Deputy Magistrate and Deputy Collector, Pabna, is allowed leave on average pay for thirteen days, under rule 81 (*b*) (*ii*) of the Fundamental Rules, with effect from the 17th May 1937.

No. 4367A.—17th April 1937.—Babu Jatindra Mohan Das, Sub-Deputy Collector, is allowed leave on average pay for two weeks, under rule 81 (*b*) (*ii*) of the Fundamental Rules, in extension of the leave granted to him under the orders of the 1st March 1937.

No. 4394A.—17th April 1937.—Maulvi Akbar Husain Ahmad, Sub-Deputy Collector, is allowed leave on average pay for one month, under rule 81 (*b*) (*ii*) of the Fundamental Rules, in extension of the leave granted to him under the orders of the 15th March 1937.

Police.

No. 4401A.—17th April 1937.—Mr. S. Gupta, I.P., is allowed leave on average pay for one month, under rule 81 (*b*) (*i*) of the Fundamental Rules, in extension of the leave granted to him under the orders of the 2nd February 1937.

Ecclesiastical.

Calcutta.—No. 4418A.—19th April 1937.—In modification of the orders of the 6th April 1937, the Ven'ble E. J. Young, Archdeacon of Calcutta and Senior Chaplain, St. John's Church, Calcutta, is allowed leave on average pay for four months, under rule 81 (*b*) (*i*) of the Fundamental Rules, with effect from the 20th May 1937, or any subsequent date on which he may be relieved of his duties.

NOTIFICATION.

Rajshahi.—No. 4415A.—19th April 1937.—Mr. K. C. Roy, I.C.S., Assistant Magistrate, Rajshahi, is vested with the powers of a Deputy Collector.

G. P. HOGG,

Secy. to the Govt. of Bengal.

Constitution and Elections.

NOTIFICATIONS.

No. 8873A.R.—12th April 1937.—In exercise of the power conferred by clause (*b*) of sub-section (*2*) of section 62 of the Government of India Act, 1935, His Excellency the Governor prorogued the Bengal Legislative Assembly on the 8th April 1937.

No. 8875A.R.—12th April 1937.—In exercise of the power conferred by clause (*b*) of sub-section (*2*) of section 62 of the Government of India Act, 1935, His Excellency the Governor prorogued the Bengal Legislative Council on the 9th April 1937.

No. 8877A.R.—12th April 1937.—In pursuance of the provisions of sub-section (*1*) of section 65 of the Government of India Act, 1935, the Hon'ble Khan Bahadur M. Azizul Haque, C.I.E., was chosen by the Bengal Legislative Assembly to be Speaker thereof on the 7th April 1937. He assumed the duties of his office on the afternoon of the 7th April 1937.

No. 8879A.R. -12th April 1937.—In pursuance of the provisions of sub-section (*1*) of section 65 of the Government of India Act, 1935, Mr. M. Ashraf Ali was chosen by the Bengal Legislative Assembly to be Deputy Speaker thereof on the 8th April 1937. He assumed the duties of his office on the afternoon of the 8th April 1937.

No. 8881A.R.—12th April 1937.—In pursuance of the provisions of sub-section (*1*) of section 65 of the Government of India Act, 1935, read with sub-section (*5*) of that section, the Hon'ble Mr. Satyendra Chandra Mitra was chosen by the Bengal Legislative Council to be President thereof on the 9th April 1937. He assumed the duties of his office on the afternoon of the 9th April 1937.

No. 8883A.R.—12th April 1937.—In pursuance of the provisions of sub-section (*1*) of section 65 of the Government of India Act, 1935, read with sub-section (*5*) of that section, Mr. Hamidul Huq Chowdhuri was chosen by the Bengal Legislative Council to be Deputy President thereof on the 9th April 1937. He assumed the duties of his office on the afternoon of the 9th April 1937.

G. P. HOGG,

Secy. to the Govt. of Bengal.

Jails.

NOTIFICATIONS.

Calcutta.—No. 1076H.J.—15th April 1937.—Mr. W. E. Duckfield, Deputy Commissioner of Police, Headquarters, Calcutta, is appointed to be a visitor of the Alipore Central Jail, *vice* Mr. E. Hodson, I.P., J.P., on leave.

2. This cancels notification No. 1995P.J., dated the 25th May 1935.

Dacca.—No. 1116H.J.—17th April 1937.—Mr. J Henderson has been appointed to act as Deputy Superintendent of the Dacca Central Jail, with effect from the 12th March 1937, *vice* Mr. F. Noble, on leave.

J. R BLAIR,

Addl. Secy. to the Govt of Bengal.

Orders by the Inspector-General of Prisons, Bengal.

No. 11646.—19th April 1937.—Major G. C. W. Willis, D.S.O , handed over charge of his office of the Superintendent of Hijli Additional Special Jail to Rai Baidyanath Chatterjee Bahadur on the afternoon of the 31st March 1937.

M. A. SINGH, LT.-COL., I.M.S.,

Inspector-General of Prisons, Bengal (offg.).

Police.

NOTIFICATION.

Howrah.—No. 1802Pl. —12th April 1937. — In exercise of the power conferred by section 2 of the Bengal Public Gambling Act, 1867 (Bengal Act II of 1867), the Governor is pleased to extend all the sections of the said Act (except section 13 which already applies) to the whole of mauza Sijbatia Bazar, jurisdiction list No. 127, within the Uluberia police-station in the district of Howrah.

G. P. HOGG,

Secy. to the Govt. of Bengal.

Orders by the Inspector-General of Police, Bengal.

Calcutta.—No. 4609A.—14th April 1937. —(*i*) **Midnapore-Rangpur.** — In consequence of the abolition of the Range Reserves, Khan Sahib Ghulam Muhammad Khan, Armed Inspector, is transferred from Midnapore to Rangpur.

(*ii*) **Rangpur.** — Babu Seo Paltan Singh, officiating Armed Inspector, Rangpur, will revert to his substantive rank of Sub-Inspector.

No. 4706A.—16th April 1937.—(*i*) **Bankura-24-Parganas.** — Mr. W. B. Crombie, Armed Inspector of Bankura, now temporarily attached to the Range Reserve Force at Alipore (24-Parganas), will, on the abolition of the Range Reserve, continue to be employed temporarily in the 24-Parganas district.

(*ii*) **Bankura.** — Sergeant J T. Ogleby who was appointed to officiate as Armed Inspector, Bankura, will revert to his substantive rank of Sergeant on the 30th April 1937.

J. C. FARMER,

Inspector-General of Police, Bengal.

JUDICIAL DEPARTMENT.

No. 4460A.

Powers.

Bakarganj.—No. 4282A.—14th April 1937. —Babu Shashanka Sekhar Chaudhuri, Deputy Magistrate, Pirojpur, Bakarganj, is vested with the power to try summarily the offences mentioned in section 260 of the Code of Criminal Procedure.

Pabna.—No. 4362A.—16th April 1937. — Maulvi Altafur Rahman Khan, Deputy Magistrate, Serajganj, Pabna, is vested with powers under section 110 of the Code of Criminal Procedure.

Bakarganj.—No. 4383A.—17th April 1937. —Maulvi Abdul Quader, Deputy Magistrate, Bakarganj, is vested with the powers of a Magistrate of the first class.

Bakarganj.—No. 4385A.—17th April 1937. —Maulvi Khurshed Ali, Deputy Magistrate, on probation, Bakarganj, is vested with the powers of a Magistrate of the first class.

Burdwan.—No. 4390A.—17th April 1937. —Babu Surendra Nath Biswas, Deputy Magistrate, Asansol, Burdwan, is vested with the power to try summarily the offences mentioned in section 260 of the Code of Criminal Procedure.

Nadia - Mymensingh - Chittagong. — No. 4409A.—19th April 1937.—The Joint Magistrates, named below, are vested with the powers of a Magistrate of the first class:—

Mr. M. M. Basu, I.C.S., Kushtia, Nadia.

Mr. A. Wooller, I.C.S., Tangail, Mymensingh.

Mr. H. C. Gupta, I.C.S., Cox's Bazar, Chittagong.

Rajshahi.—No. 4413A.—19th April 1937. — Mr. K. C. Roy, I.C.S., Assistant Magistrate, Rajshahi, is vested with the powers of a Magistrate of the second class.

G. P. HOGG,
Secy. to the Govt. of Bengal.

Appointments and Transfers.

Birbhum-Burdwan. — No. 3268J. — 31st March 1937. Babu Ranendra Nath Datta, probationary munsif, under training at Suri, in the district of Birbhum, is appointed to be a munsif in the district of Burdwan, to be ordinarily stationed at Asansol, during the absence, on leave, of Maulvi Badiuzzaman Ahmad, or until further orders.

N. G. A. EDGLEY,
Secy. to the Govt. of Bengal.

JUDICIAL AND LEGISLATIVE DEPARTMENTS.

Judicial.

Appointments and Transfers.

Calcutta.—No. 3231J.—9th April 1937.— Maulvi A. S. M. Akram, Advocate, High Court, Calcutta, is appointed temporarily to act as a Judge of the Court of Small Causes, Calcutta.

Calcutta.—No. 3242J.—10th April 1937.— Mr. Debendra Narain Bhattacharji, Advocate, High Court, Calcutta, is appointed to act as Deputy Superintendent and Remembrancer of Legal Affairs, Bengal, during the period Mr. N. A. Khundkar officiates as a Judge of the High Court, Calcutta, or until further orders.

24-Parganas. — No. 3278J. — 10th April 1937.—In exercise of the powers conferred by sections 14 and 15 and the proviso to section 357 of the Code of Criminal Procedure, 1898 (Act V of 1898), the Governor is pleased—

(*a*) to confer upon each of the gentlemen named below the powers of a Magistrate of the third class, in the district of the 24-Parganas, for a period of three years from the 26th April 1937,

(*b*) to direct him to sit as a member of the Palta bench in the said district, and

(*c*) to direct him to take down evidence in the English language:—

Rai Sahib Amal Chandra Pal.

Babu Haridas Pal,

Babu Gadadhar Mandal.

Bogra.—No. 3280J.—10th April 1937.—In exercise of the powers conferred by sections 14 and 15 of the Code of Criminal Procedure, 1898 (Act V of 1898), the Governor is pleased—

(*a*) to confer upon Maulvi Mir Abdus Samad the powers of a Magistrate of the third class, in the district of Bogra, for a period of three years from the 30th April 1937, and

(*b*) to direct him to sit as a member of the Sherpur bench in the said district.

Howrah. No. 3415J.—13th April 1937.—In exercise of the powers conferred by sections 14 and 15 of the Code of Criminal Procedure, 1898 (Act V of 1898), the Governor is pleased—

(*a*) to confer upon Mr. Rupert Stancourt the powers of a Magistrate of the third class, in the district of Howrah, for a period of three years from the 26th April 1937, and

(*b*) to direct him to sit as a member of the Sadar bench in the said district.

Murshidabad. — No. 3520J. — 16th April 1937.—In exercise of the powers conferred by sections 14 and 15 and the proviso to section 357 of the Code of Criminal Procedure, 1898 (Act V of 1898), the Governor is pleased—

(*a*) to confer upon Babu Jay Krishna Datta the powers of a Magistrate of the third class, in the district of Murshidabad, for a period of three years from the 8th May 1937, in respect to such cases as may be made over to him within the limits of the Jangipur subdivision of the said district,

(*b*) to direct that he shall, in addition to sitting singly, sit as a member of the Jangipur bench in the said district, and

(*c*) to direct him to take down evidence in the English language.

Calcutta.—No. 3539J.—17th April 1937.—Rai Probodh Gopal Mukharji Bahadur, Public Prosecutor in the Courts of Presidency Magistrates, Calcutta, is allowed leave on average pay for the period from the 26th March 1937 to the 24th April 1937, as follows, viz., earned leave for sixteen days under rule 10 and leave on private affairs for the remaining period under rule 15 (*a*) of the Bengal Services (Revision of Leave) Rules, 1934, in extension of the leave already granted to him.

Resignation.

Dacca.—No. 3421J.—14th April 1937.—The Governor is pleased to accept the resignation tendered by Khan Sahib Maulvi Hamidur Rahman of his appointment as an Honorary Magistrate of the Dacca Sadar bench.

NOTIFICATIONS.

Howrah.—No. 3227J.—9th April 1937.—In exercise of the power conferred by section 65 of the Bengal Village Self-Government Act, 1919 (Bengal Act V of 1919), the Governor is pleased to appoint Babu Pratap Chandra Sarkar, a member of the Jagatballavpur union board within the Jagatballavpur police-station in the Sadar subdivision of the Howrah district, to be, during his term of office as such member, a member of the union bench within the jurisdiction of the said union board for the purposes of that section, *vice* Babu Charu Chandra Barman, deceased.

Howrah.—No. 3228J.—9th April 1937.—In exercise of the power conferred by section 73 of the Bengal Village Self-Government Act, 1919 (Bengal Act V of 1919), the Governor is pleased to appoint Babu Pratab Chandra Sarkar, a member of the Jagatballavpur union board within the Jagatballavpur police-station in the Sadar subdivision of the Howrah district, to be, during his term of office as such member, a member of the union court within the jurisdiction of the said union board for the purposes of that section, *vice* Babu Charu Chandra Barman, deceased.

Burdwan.—No. 3271J.—10th April 1937.—In exercise of the power conferred by section 65 of the Bengal Village Self-Government Act, 1919 (Bengal Act V of 1919), the Governor is pleased to appoint the following members of the Ajhapur union board within the Jamalpur police-station in the Sadar subdivision of the Burdwan district, to be, during their term of office as such members, a union bench within the jurisdiction of the said union board for the purposes of that section:—

Babu Pravash Chandra Ray.

Babu Paresh Nath Majumdar.

Babu Jnanendra Nath Chaudhuri.

Maulvi Syed Mohammad Mamud.

Burdwan.—No. 3272J.—10th April 1937.—In exercise of the power conferred by section 73 of the Bengal Village Self-Government Act, 1919 (Bengal Act V of 1919), the Governor is pleased to appoint the following members of the Ajhapur union board within the Jamalpur police-station in the Sadar subdivision of the Burdwan district, to be, during their term of office as such members a union court within the jurisdiction of the said union board for the purposes of that section:—

Babu Pravash Chandra Ray.

Babu Paresh Nath Majumdar.

Babu Jnanendra Nath Chaudhuri.

Maulvi Syed Mohammad Mamud.

Burdwan.—No. 3273J.—10th April 1937.—In exercise of the power conferred by section 65 of the Bengal Village Self-Government Act, 1919 (Bengal Act V of 1919), the Governor is pleased to appoint Babu Dharmadas Chaudhuri, a member of the Barapalashan union board within the Memari police-station of the Sadar subdivision of the Burdawn district, to be, during his term of office as such member, a member of the union bench within the jurisdiction of the said union board for the purposes of that section.

Burdwan.—No. 3274J —10th April 1937.—In exercise of the power conferred by section 73 of the Bengal Village Self-Government Act, 1919 (Bengal Act V of 1919), the Governor is pleased to appoint Babu Dharmadas Chaudhuri, a member of the Barapalashan union board within the Memari police-station in the Sadar subdivision of the Burdwan district, to be, during his term of office as such member, a member of the union court within the jurisdiction of the said union board for the purposes of that section.

Burdwan.—No. 3275J —10th April 1937.—In exercise of the power conferred by section 65 of the Bengal Village Self-Government Act, 1919 (Bengal Act V of 1919), the Governor is pleased to appoint Babu Phani Bhusan Bhattacharji, a member of the Mankar union board within the Galsi police-station in the Sadar subdivision of the Burdwan district to be, during his term of office as such member, a member of the union bench within the jurisdiction of the said union board for the purposes of that section.

Burdwan.—No. 3276J.—10th April 1937.—In exercise of the power conferred by section 73 of the Bengal Village Self-Government Act, 1919 (Bengal Act V of 1919), the Governor is pleased to appoint Babu Phani Bhusan Bhattacharji, a member of the Mankar union board within the Galsi police-station in the Sadar subdivision of the Burdwan district, to be, during his term of office as such member, a member of the union court within the jurisdiction of the said union board for the purposes of that section.

Burdwan.—No. 3418J.—14th April 1937.—In exercise of the power conferred by section 65 of the Bengal Village Self-Government Act, 1919 (Bengal Act V of 1919), the Governor is pleased to appoint Babu Shyama Das Saigal, a member of the Ukhra union board within the Ondal police-station in the Asansol subdivision of the Burdwan district, to be, during his term of office as such member, a member of the union bench within the jurisdiction of the said union board for the purposes of that section, *vice* Babu Dwija Pada Mukharji, resigned.

Burdwan.—No. 3419J.—14th April 1937.—In exercise of the power conferred by section 73 of the Bengal Village Self-Government Act, 1919 (Bengal Act V of 1919), the Governor is pleased to appoint Babu Shyama Das Saigal, a member of the Ukhra union board within the Ondal police-station in the Asansol subdivision of the Burdwan district, to be, during his term of office as such member, a member of the union court within the jurisdiction of the said union board for the purposes of that section, *vice* Babu Dwija Pada Mukharji, resigned.

N. G. A. EDGLEY,

Secy. to the Govt. of Bengal.

DEPARTMENT OF PUBLIC HEALTH AND LOCAL SELF-GOVERNMENT.

NOTIFICATIONS.

24-Parganas.—No. 1929M.—9th April 1937.—In exercise of the power conferred by section 506 of the Bengal Municipal Act, 1932 (Bengal Act XV of 1932), the Governor is pleased to confirm the by-laws framed by the Commissioners of the Bhatpara Municipality in the district of the 24-Parganas, under section 417 of the said Act and published for information under notification No. 7014M., dated the 5th September 1936.

Faridpur.—No. 1931M.—9th April 1937.—In exercise of the power conferred by section 506 of the Bengal Municipal Act, 1932 (Bengal Act XV of 1932), the Governor is pleased to confirm the by-laws framed by the Commissioners of the Rajbari Municipality in the district of Faridpur, under section 392 of the said Act and published for information under notification No. 7752M., dated the 9th October 1936.

No. 1939M. — 10th April 1937. — The following by-laws, made by the Corporation of Calcutta under clause (33) of section 478 and section 480 of the Calcutta Municipal Act, 1923 (Bengal Act III of 1923), have been sanctioned by the Governor of Bengal in accordance with the provisions of section 482(*1*) of that Act, and are hereby published as required by section 486 thereof:—

By-laws under section 478(33) of the Calcutta Municipal Act regarding the straying of any animal, keeping, feeding and destruction of any animal and disposal of its carcass and fees payable for such removal.

A.—*Preventing the straying of any animal.*

1. No person shall allow any cow, calf bullock, buffalo, horse, mule, donkey, goat o any other four-footed animal to stray in o upon any public street, square, garden, marke or land belonging to the Corporation.

2. The Corporation shall have power t seize any animal so found straying and shal send it to the nearest pound.

B.—*Keeping and feeding of any animal.*

3. No person shall keep any animal either in his possession or under his control in such a manner as to create a nuisance or be dangerous to any person or property.

4. No person shall keep either in his possession or under his control any animal suffering from any infectious or contagious disease.

5. If any person is found to keep in his possession or under his control any animal which is suffering from any contagious or infectious disease and the Health Officer is of opinion that the segregation of such animal is necessary to prevent the spread of infection or is desirable in the interest of public health, such person shall, on the written requisition of the Health Officer in that behalf, remove such animal to a veterinary hospital for treatment. The Health Officer may also seize such animal and remove it to a hospital for treatment.

C.—*Destruction and slaughter of any animal.*

6. No person shall flay any animal alive. If any person is in possession of an entire skin portion whereof is the skin of the head of an animal it shall be presumed, until the contrary is proved, that the animal has been flayed alive.

7. In any case in which the skin or the carcass of an animal shows signs of a contagious disease such skin or carcass shall be destroyed by the Corporation.

8. No animal that is or is known or reasonably believed to be with young shall be slaughtered for food.

9. No prime cow shall be slaughtered for food.

10. No calf shall be slaughtered for food.

11. No person suffering from leprosy, sores, or any skin disease or any contagious or infectious disease shall be allowed to take any part in the destruction or slaughter of animals.

D.—*Disposal of carcasses.*

12. (*a*) The occupier of any land or premises in or upon which any animal dies or in or upon which the carcass of any animal is found and the owner or the person having the charge of any animal which dies in a street or in open place, shall, within three hours after the death of the animal or if the death occurs at night within three hours after sunrise—

(*i*) remove the carcass to some depot or place provided or appointed for the purpose by the Corporation under section 371 for the temporary deposit or final disposal of carcasses, or

(*ii*) report the death of the animal to the District Engineer or any other officer of the Corporation appointed for the purpose with a view to the removal of the carcass.

(*b*) When any carcass is removed in pursuance of sub-clause (*ii*) of clause (*a*), the fee payable to the Corporation for the removal of the carcass, by the owner of the animal or if the owner is not known, by the owner or occupier of the land or premises in or upon which the carcass is found or by the person in whose charge the animal died shall be fixed as follows:—

(*i*) For large animals weighing more than two maunds which have to be picked up by lorries from the premises—Rs. 3.

(*ii*) Medium size animals weighing between one and two maunds which can be removed by two domes to the ward depots—Rs. 2-4.

(*iii*) Small carcasses which can be removed to depots by one dome—As. 12.

(*c*) No person shall remove the carcass of any animal—

(*i*) otherwise than to a depot or place provided or appointed for the purpose under section 371(*I*), or

(*ii*) in such a manner as to create a nuisance.

(*d*) In case the occupier of any land or premises in or upon which the carcass of any animal is found or the owner or the person having the charge of any animal which dies in a street or in any open place fail to report the death of the animal to the proper officer of the Corporation, or remove the carcass, the officers of the Corporation, shall have power to enter into or upon any such land or premises in order to remove any carcass found lying there.

A fee for such removal shall be paid by such owner or occupier of the land or premises or by the owner or by the person having the charge of the animal in addition to any penalty that he might otherwise incur under these by-laws.

E.—*Penalty clause.*

13. A breach of the above by-laws Nos. 1, 3, 4, 5, 8, 9 and 12(*a*) and 12(*c*) shall be punishable with fine which may extend to Rs. 50 and in the case of continuance of the breach with a further fine which may extend to Rs. 10 for each day during which the breach continues after the first day.

Burdwan.—No. 1978M.—15th April 1937.—In exercise of the power conferred by section 58 (2) of the Bengal Municipal Act, 1932 (Bengal Act XV of 1932), the Governor of Bengal is pleased to appoint Babu Nemai Chandra Roy to be a Commissioner of the Raniganj Municipality, in the district of Burdwan, *vice* Babu Panchu Gopal Sen, resigned.

Burdwan.—No. 2001M.—16th April 1937.—In exercise of the power conferred by section 506 of the Bengal Municipal Act, 1932 (Bengal Act XV of 1932), the Governor of Bengal is pleased to confirm the by-laws framed by the Commissioners of the Asansol Municipality in the district of Burdwan under section 328 of the said Act and published for information under notification No 8387M , dated the 18th November 1936.

Hooghly.—No. 2003M.—16th April 1937 In exercise of the power conferred by clause (*g*) of section 8 of the Bengal Municipal Act, 1932 (Bengal Act XV of 1932), the Governor of Bengal is pleased to alter the number of Commissioners of the Bansberia Municipality in the district of Hooghly from 12 to 13.

Hooghly.—No. 2005M.—16th April 1937.—In exercise of the power conferred by section 19 of the Bengal Municipal Act, 1932 (Bengal Act XV of 1932), the Governor of Bengal is pleased to determine that the Muhammadan community in the Bansberia Municipality in the district of Hooghly shall be deemed to be a minority community for the purposes of that section and that two out of nine elected seats shall be reserved for that community.

Hooghly.—No. 2007M.—16th April 1937.—In exercise of the power conferred by section 20 of the Bengal Municipal Act, 1932 (Bengal Act XV of 1932), the Governor of Bengal is pleased to direct, in modification of notification No. 6037M., dated the 6th November 1933, that the existing two wards I and II and the two wards III and IV of the Bansberia Municipality in the district of Hooghly shall be grouped, respectively, into two special wards A and B for the purpose of election to the two seats reserved for the minority community in this municipality, and that the number of Commissioners to be elected from the special wards and each existing ward of this municipality shall be as shown in columns 2 and 4 of the table below against each such ward:—

Number of ward	Number of seats other than the reserved seat shown in column 3 to which Commissioners are to be elected	Special ward	Number of seats reserved for the minority community.
1	2	3	4
I II	2 2	A	1
III IV	1 2	B	1

Medical.

NOTIFICATIONS.

Jalpaiguri. — No. 1522Medl — 15th April 1937.—Khan Sahib Dr. Kabir Hossain of the Sadar Hospital, Jalpaiguri, and Teacher of Medicine and Materia Medica, Jackson Medical School, Jalpaiguri, is granted leave on average pay for one month, with effect from the 1st May 1937, under rule 81 (*b*) (*ii*) of the Fundamental Rules

No. 1490Medl.—10th April 1937.—In pursuance of section 7 of the Bengal Medical Act, 1914 (Bengal Act VI of 1914), as amended by Bengal Act III of 1928, it is hereby notified for general information that Dr. Ramgati Banerjee, B.SC., M.B., has been duly re-elected under clause (*e*) of section 4 of the Act to be a member of the Bengal Council of Medical Registration for a fresh term commencing from the 14th February 1937.

CORRIGENDUM.

No. 1485Medl.—9th April 1937.—In notification No. 4081Medl., dated the 6th November 1936, published at page 2588, Part I of the *Calcutta Gazette* of the 12th November 1936, *read* "Babu Bijay Kumar Mukherjee" *for* "Babu Bijoy Krishna Mukherjee."

Public Health.

NOTIFICATIONS.

No. 1436P.H.—10th April 1937.—For the purposes of the Paris Sanitary Convention, 1926, and with reference to rule 1(*5*) of the rules framed under section 6, sub-section (*1*), clause (*p*) of the Indian Ports Act, 1908 (Act XV of 1908), and published in Marine Department notification No. 16Mne., dated the 6th March 1917, the Governor is pleased to declare Karachi to be an infected port on account of plague.

Rajshahi.—No. 1415P.H.—9th April 1937.—Under rule 7 of the Local Authorities Loans Rules, 1915, as subsequently amended, it is hereby notified for general information that the Governor of Bengal intends to sanction the following application from the Commissioners of the Rajshahi Municipality for a loan of Rs. 35,000 from Government bearing interest at the rate of 3¾ per cent. per annum and repayable in forty half-yearly instalments of Rs. 1,251-9-1 each for their water-supply scheme, unless good reasons are shown to the contrary within one month from the date of publication of this notification within the municipality.

Application from the Commissioners of the Rajshahi Municipality for a loan of Rs. 35,000 for the proposed Water Works of the Rajshahi Municipality.

The work for which the loan is required and the estimate of the cost thereof.	The amount which it is proposed to borrow	The fund or funds on the strength of which it is proposed to borrow	The law or laws under which the said fund is levied or held	Receipt of loan. (a) The period for which the loan is required.	(b) The rate of interest at which it is proposed to borrow	(c) The number of instalments in which it is proposed that the loan should be taken	(d) The amount of each instalment	(e) The date proposed for receiving each instalment	Repayment of loan. (f) The number of instalments in which the loan is repayable and the date of payment thereof	(g) Amount of each instalment
1	2	3	4	5	6	7	8	9	10	11
Municipality (for first extension)		cipal Fund	of 1932	years.	per annum	instalment		1937	and 1st June each year, commencing from 1st December 1937	

Financial position of the municipality.

Revenue (details of each of the preceding three years) — Sources from which the revenue is derived	Amounts for— 1932-33	1933-34	1934-35.	Expenditure (details of the preceding three years) — Objects for which the expenditure is incurred	Amounts for— 1932-33.	1933-34.	1934-35	The normal surplus which may be expected in future, i.e., difference between the average ordinary income and the average ordinary expenditure calculated on the figures in columns 13 to 15 and 17 to 19, respectively	Remarks.
12	13	14	15	16	17	18	19	20	21
	Rs	Rs	Rs		Rs	Rs	Rs.	Rs.	
(a) Municipal rates and taxes—				(1) General administration and collection charges	10,002	12,868	9,779		
(1) Tax on holdings ..	35,770	33,183	38,597						
(2) Water rate ..	Nil	Nil	Nil	(2) Public safety .	5,199	4,805	6 637		
(3) Latrine fees ..	30,092	28,990	26,532	(3) Public health and convenience (excluding expenditure from local funds and from grants other than ordinary) –					
(4) Lighting rate ..	Nil	Nil	Nil						
(5) Tax on animals and vehicles	6 536	6,229	7 304	(i) Water-supply (establishment and repairs)	1,305	2,162	1,970		
(6) Tax on profession and trade	526	880	2,185	(ii) Drainage (establishment and repairs)	4 132	3,271	3,307		
Warrent fee ..	25	147	245						
(b) Realizations under special Acts	4,096	4,059	3,622	(iii) Conservancy (heads 3 to 13 in account form No 1)	37,567	39,338	40,984		
(c) Revenue derived from municipal property and powers apart from taxation (excluding sale-proceeds of land)	4 564	5,279	4,907	(iv) Public works (establishment, repairs and plants)	15,002	13,509	15,588		
				(4) Public instruction ..	2,836	3,071	4,257		
(d) Grants and contribution —recurring.	2,216	2,210	2,362	(5) Contributions—recurring	3 292	4,153	4,387		
(e) Miscellaneous (details of individual items exceeding Rs. 1,000 to be provided in remarks column)	1,720	432	525	(6) Miscellaneous (excludidg items exceeding Rs 1,000 to be detailed below)	2,398	5,332	4,496		
				(7) Repayment of loan ..	..	..	..		
Ferry ..	2,071	1,704	1,737						
Total Ordinary Income ..	87,616	83,113	98,016	(X) Total Ordinary Expenditure	81,733	88,510	91,325		

Installation of water works of the Rajshahi

Rs. 35,000.

Rajshahi Muni-

Act XV

Twenty

3¾ per cent

In one

Rs. 35,000.

1st June

Forty equated half-yearly instalments payable on 1st December

Rs. 1,251-9-1.

(f) Extraordinary and debt	3,979	17,436	5,898
(g) Receipts of abnormal character—	..	..	..
(1) Sale-proceeds of land	57	117	51
(2) Grants and contributions (recurring or special)	42	1 050	760
(3) Other items ..	..	..	..
Total ..	91,694	1,01,716	1 04,725
Opening balance ..	2,283	4,504	6,923
Grand Total ..	93,977	1,06,220	1.11,648

8. Extraordinary and debt, excluding repayment of loans.	5,705	6,636	5561
9. (i) Capital outlay on—			
(a) Water-supply ..	1,185	4 016	946
(b) Drainage ..	850	135	696
(c) Buildings and roads (new works)	..	..	3,141
(ii) Other expenditure from special grants or donations.	..	..	..
(Y) Total (i) and (ii) ..	2,035	4,151	4,783
Deduct—Expenditure out of loans, special grants or donations (*vide* Account No. 72)	..	1,050	760
Net capital and expenditure met out of revenue	2,035	4,151	4,783
Total of (X), (8) and (Y) ..	89,473	99 297	1,01,669
Closing balance—			
Special funds—			
(a) Water ..	..	..	..
(b) Lighting ..	..	..	..
(c) Latrine ..	..	..	..
Revenue Fund ..	4,504	6,923	9,979
Grand Total ..	93,977	1,06,220	1,11,648

In addition to the details required on the reverse, clear information should be given below under the following heads :—

(*a*) If the ordinary surplus is insufficient to meet the charges of the proposed loan, the particular steps which the municipality has taken or has agreed to take, in order to make good the deficiency.

1. There will be no appreciable surplus from the general revenue at the present moment and there is no deficiency in the budget-receipt and disbursement sides. Loan will be paid from the surplus available from water rate after meeting the running cost and depreciation and cost of collection as shown below :—

Name of mohallas	Quarterly demand of house rate at Rs. 9-6 per cent. on the annual value of holdings.	
	Rs a. p.	Rs.
Initial scheme—		
Ghoramara	356 7 9	
Sagarpara	824 7 9	
Kumarpara	349 9 6	
Fudkipara	190 1 9	
Khansamarchowk	616 1 0	
Miapara	292 11 6	
Sekherchowk ..	283 3 6	
Gonokpara .	554 15 6	
Rampurbazar . ..	98 8 9	
Boalia	488 2 0	
Ranibazar	407 4 6	
Malapara	342 10 3	
Sahelbazar	1,663 2 9	
Hetamkhan	472 8 0	
Sabjipara	216 6 9	
Sirusarpara	149 14 3	
Durgapara	69 4 0	
Hosenigunj	191 8 6	
Jotemohesh	162 6 3	
Sheikhpara	178 0 6	
Sepoypara	206 8 6	
Srirampur	68 5 6	
Government buildings . ..	2,772 2 6	
District Board buildings ..	74 10 0	
		11,029
1st extension—		
Ramchandrapur ..	168 1 9	
Beldarpara	128 2 9	
Ballavgunj	112 15 6	
		409
2nd extension—		
Kazihata	208 7 3	
Lakshipur	36 10 0	
Bhatapara	26 5 9	
Batiapara	3 14 0	
Rajpara	48 3 3	
Mohisbathan	81 1 6	
Khalupara . ..	4 13 9	
Haragram	49 3 3	
Bulonpur	14 10 0	
Keshabpur	105 15 3	
Goalpara	135 15 3	
Nababgunj ..	33 12 6	
Government buildings . ..	671 5 0	
District Board buildings ..	52 5 0	
		1,467
Talaimari	74 6 6	
Raninagor . .	226 8 3	
Bajekajla ..	221 5 9	12,905
Bagichapara . .	1 4 3	
Sahebgunj	99 14 6	
Kadirgunj . ..	287 15 6	
		911
Grand Total (per quarter house tax)	.	13,816
Annually . ..	..	55,264

(*b*) The reserve of taxation or other possible means of increase in the revenue of the municipality, the rates at which each of the taxes mentioned in column 12 on the previous page are levied, other than tax on persons, should be stated here.

2. A water rate at three-fourth anna in the rupee, i.e., Rs. 4-11 per cent. on the annual value of holdings was approved by the Municipal Board's extraordinary meeting, dated 3rd September 1926.

(c) A statement of all outstanding loans specifying, in respect of each loan, the date when taken, the purpose (very briefly), the amount, the annual charges involved and the amount still payable.

3. The total annual demand (current) on account of tax on holdings imposed at Rs. 9-6 per cent. on the annual value is Rs. 55,200 in round number.

(d) Any explanation in regard to receipts and expenditure to show the true financial position of the municipality when such position is otherwise than the ordinary surplus would indicate.

The water rate levied at Rs. 4-11 per cent. on the annual value, when the entire scheme is given effect to, will come up to half the above amount, i.e., Rs. 27,600.

	Rs.
4. Total water rate ...	27,600
Deduct 1/6th on account of lower rate for distance and irrecoverable items ...	4,600
Balance ...	23,000
Recurring charge including cost of collection at 7 per cent. and reserve for renewal of tube-wells in ten years, and depreciation of machinery and filter, etc., in fifteen years as shown by the Chief Engineer, Public Health Department ...	18,500*
Balance ...	4,500
For liquidation of loan ...	2,800
Surplus available ...	1,700

**Note*: Rs. 18,500 as per Chief Engineer's estimate may come to be reduced if the pumps are worked by motor. A reference has been made to the Chief Engineer, Public Health Department, on this point.

Khulna.—No. 1419P.H.—9th April 1937.—Under rule 7 of the Local Authorities Loans Rules, 1915, as subsequently amended, it is hereby notified for general information that the Governor of Bengal intends to sanction the following application from the members of the Khulna district board for a loan of Rs. 2,000 from Government bearing interest at the rate of 3¾ per cent. per annum and repayable in twenty half-yearly instalments of Rs. 120-13-6 each for granting an equivalent loan to the Bagerhat union board for its water-supply scheme, unless good reasons are shown to the contrary within one month from the date of publication of this notification within the district.

Application from the Khulna district board for a loan of Rs. 2,000 from Government.

1	2	3	4	Receipt of loan. 5 (a)	6 (b)	7 (c)	8 (d)	9 (e)	Repayment of loan. 10 (f)	11 (g)
The work or works for the construction or repairs of which the loan is required.	The amount which it is proposed to borrow.	The fund or funds on the security of which it is proposed to borrow.	The law or laws under which the said fund or funds is or are levied, received or held.	The period for which the loan is required.	The rate of interest at which it is proposed to borrow.	The number of instalments in which it is proposed that the loan should be taken.	The amount of each instalment.	The date proposed for receiving such instalment.	The number of instalments in which the loan is repayable and the date of payment thereof.	Amount of each instalment.
The loan is required for granting a loan of Rs. 2,000 to Bagerhat union board for Bagerhat Water-supply Scheme.	Rs. 2,000.	Khulna District Fund.	Bengal Local Self-Government Act (Act III of 1885).	Ten years.	At 8¾ per cent.	One.	Rs. 2,000	1st May 1937.	Twenty half-yearly instalments payable on 1st November and 1st May each year, commencing from 1st November 1937.	Rs. 120-13-6 half-yearly

Financial position of the Khulna district board.

Revenue (details for each of the three preceding years).

12 Sources from which the revenue is derived.	Amount for— 1932-33. 13	1933-34. 14	1934-35. 15
	Rs.	Rs.	Rs.
Land revenue ..	2,278	1,785	2,050
Provincial rates ..	4,58,860	4,17,076	5,77,516
Interest ..	8,080	10,518	17,407
Law and Justice ..	59	51	275
Police ..	134	431	244
Education ..	67,379	74,151	74,388
Medical ..	93,267	92,766	86,388
Scientific and other minor departments.	120	120	120
Miscellaneous ..	301	5,538	10,030
Civil Works ..	69,228	53,215	54,459
Total Ordinary Income ..	6,99,706	6,55,651	8,22,877
Debts, deposits and advances	30,748	24,884	42,781
Loan from Government	..	.	10,000
Total ..	7,30,454	6,80,535	8,75,658
Opening balance ..	62,937	44,046	77,790
GRAND TOTAL ..	7,93,391	7,24,581	9,53,448

Expenditure (details for each of the three preceding years).

16 Object on which the expenditure is incurred.	Amount for— 1932-33. 17	1933-34. 18	1934-35. 19
	Rs.	Rs.	Rs.
Refunds and drawbacks	..	..	..
Land revenue	314	182	235
Interest	8,010	7,623	7,208
General Administration	29,412	25,287	28,104
Law and Justice	107	79	243
Police	22	4	10
Education	1,39,997	1,37,117	1,44,853
Medical .. .. } Public Health .. .. }	1,94,241	1,71,477	{ 71,897 / 99,812
Scientific and other minor departments ..	8,270	6,920	7,472
Superannuation allowances and pensions ..	7,553	7,554	7,807
Stationery and Printing	1,227	992	1,108
Miscellaneous	857	553	1,958
Civil Works	3,24,470	2,55,075	3,03,095
Total Expenditure	7,14,480	6,12,863	6,73,802
Debts, deposits and advances ..	29,183	27,859	44,567
Repayment of loans	5,682	6,069	6,484
Total ..	7,49,345	6,46,791	7,24,793
Closing balance ..	44,046	77,790	2,28,655
GRAND TOTAL ..	7,93,391	7,24,581	9,53,448

20 The normal surplus which may be expected in future, i.e., difference between the average ordinary income and expenditure calculated on the figures in the columns 13 to 15 and 17 to 19, respectively.
Rs. 59,080.

In addition to the details required on the reverse, clear informations are given below under the following heads:—

(*a*) If the ordinary surplus is insufficient to meet the charges of the proposed loan, the particular steps which the district board has taken or has agreed to take to make good the deficiency.	The ordinary surplus is sufficient to meet the charges of the proposed loan Moreover the entire amount of proposed loan will be paid to Bagerhat union board which will pay the instalments of loan to district board and the district board will pay the amount to Government.
(*b*) Possible means of income in the revenue of the district board.	The instalment of loan will be paid by the Bagerhat union board to district board. The union board has undertaken to impose taxation under section 37(*b*) of the Bengal Village Self-Government Act sufficient to cover the instalment of loan.
(*c*) A statement of all outstanding loans as well as the annual charges involved on their account.	(*c*) (*1*) Loan of Rs. 40,000 taken on 20th March 1923 out of which twenty-five instalments of Rs. 1,873-2 each were paid up to date out of forty instalments. (*2*) Loan of Rs. 30,000 taken on 14th March 1925 out of which twenty-one instalments of Rs. 1,404-13 each were paid up to date out of forty instalments. (*3*) Loan of Rs. 30,000 taken on 11th March 1926 out of which nineteen instalments of Rs. 1,404-13 each were paid up to date out of forty instalments. (*4*) Loan of Rs. 30,000 taken on 1st February 1928 out of which fifteen instalments of Rs. 1,297-14 each were paid up to date out of forty instalments. (*5*) Loan of Rs. 20,000 taken on the 16th November 1929 out of which eleven instalments of Rs. 865-4 each were paid up to date out of forty instalments. (*6*) Loan of Rs. 10,000 taken on 28th March 1935 out of which one instalment of Rs. 611-9 was paid up to date out of twenty equal instalments.
(*d*) Any explanation in regard to receipts and expenditure to show the financial position of the board when such is otherwise than the ordinary surplus would indicate.	Financial position of the board indicates ordinary and substantial surplus.

Khulna.—No. 1422P.H.—9th April 1937.—Under rule 7 of the Local Authorities Loans Rules, 1915, as subsequently amended, it is hereby notified for general information that the Governor of Bengal intends to sanction the following application from the Commissioners of the Khulna Municipality for a loan of Rs. 20,000 from Government, bearing interest at the rate of 3¾ per cent. per annum and repayable in forty equal half-yearly instalments of Rs. 715-2-11 p. each for their waterworks extension scheme, unless good reasons are shown to the contrary within one month from the date of publication of this notification within the municipality.

Application from the Commissioners of the Khulna Municipality for a loan of Rs. 20,000.

The work or works for which the loan is required and the estimate of cost thereof.	The amount which it is proposed to borrow.	The fund or funds on the security of which it is proposed to borrow.	The law or laws under which the said fund or funds is or are levied, received or held.	Receipt of loan. (a) The period for which the loan is required.	(b) The rate of interest at which it is proposed to borrow.	(c) The number of instalments in which it is proposed that the loan should be taken.	(d) The amount of each instalment.	(e) The date proposed for receiving each.	Repayment of loan. (f) The number of instalments in which the loan is repayable and the date of payment thereof.	(g) Amount of each instalment.
1	2	3	4	5	6	7	8	9	10	11
extension of pipe lines to the rural areas for supply of filtered water.	(twenty thousand).	Fund.	Act XI of 1932) of 1932.		per cent.	instalments.	instalment and the balance Rs. 5,000 in the second.	and September 1937.	each year commencing from the 1st December 1937.	

Financial position of the local body.

Revenue (details of the preceding three years). Sources from which the revenue is derived.	Amount for— 1932-33.	1933-34.	1934-35.	Expenditure (details of the preceding three years). Objects on which the expenditure is incurred.	Amount for— 1932-33.	1933-34.	1934-35.
12	13	14	15	16	17	18	19
	Rs.	Rs.	Rs.		Rs.	Rs.	Rs.
(a) Municipal rates and taxes—				(1) General administration and collection charges.	5,820	6,159	5,967
(1) Tax on holdings or persons.	26,083	29,335	29,433	(2) Public safety ..	1,252	1,351	1,241
(2) Water rate .	11,764	12,221	13,561	(3) Public health and convenience (excluding capital outlay on water-supply or drainage, the cost of constructing new roads and buildings, and special expenditures met out of non-recurring grants or donations)—			
(3) Latrine fees ..	16,150	18,360	18,877				
(4) Toll on ferries ..	..	1,425	1,195				
(5) Lighting rate ..	..	..	..				
(6) Tax on animals and vehicles.	637	787	786	(i) Water-supply (establishment and repairs).	9,770	11,021	11,384
(7) Tax on professions and trades.	1,077	966	667	(ii) Drainage (establishment and repairs).	1,388	1,315	1,708
(a) Realizations under special Acts.	734	1,046	502	(iii) Conservancy, etc. (heads 3 to 13 in account form No. I).	21,497	23,346	26,638
(b) Revenue derived from municipal property and powers apart from taxation (excluding sale-proceeds of lands).	578	1,943	1,899	(iv) Public Works (establishment, repairs and tools and plant).	20,366	10,353	13,421
				(4) Public instruction ..	3,515	3,610	3,750
(c) Grants and contribution (recurring).	1,362	2,897	2,681	(5) Contributions—recurring	..	..	..
(d) Miscellaneous (details of individual items exceeding Rs. 1,000 to be furnished in the remarks column.)	2,830	1,952	4,194	(6) Miscellaneous (individual items exceeding Rs. 1,000 to be detailed in the remarks column.) Repayment of loan.	175	187	101
Total ordinary income ..	61,215	71,932	73,795	(X) Total ordinary expenditure.	65,998	59,298	66,611

The normal surplus which may be expected in future, i.e., difference between the average ordinary expenditure calculated on the figures in columns 13 to 15 and 17 to 19, respectively.	Remarks.
20	21
Rs.	
5,011	reserved tank, the expenditure on water-supply rose up in the last two years .

For the extension and improvement of the Khulna Municipal water-supply for supply of adequate filtered water to the town as well as	Rs. 20,000.	Khulna Municipal	Bengal Municipal Act	20 years	At 3¾	In two	In two instalments, viz., Rs. 15,000 in the first	(1) In the months of June	In 40 equal half-yearly instalments payable on the 1st June and 1st December	Rs. 715-2-11.	(f) Extraordinary and debt	2,829	453	5,125	(8) Extraordinary and debt, excluding repayment of loans.	400	6,895	12,065		The ordinary annual expenditure on account of water-supply is about Rs. 10,000. Owing to the re-excavation of the
											(g) Receipt of abnormal character—									
											(1) Sale-proceeds of land	2,535	47	7	(9) (i) Capital outlay on—					
											(2) Grants and contributions (non-recurring or special).	..	..	..	(a) Water-supply ..	..	74 1	841		
											(3) Other items ..	..	..	..	(b) Drainage	188	155	..		
															(c) Buildings and roads (new works).	..	1,053	814		
															(ii) Other expenditure from special grants or donations.	..	80	100		
															(Y) Total (i) and (ii) ..	188	2,029	1,755		
															Deduct—Expenditure out of loans, special grants or donations (*vide* Account No. 72).					
															Net capital expenditure met out of revenue.					
															Total of (X), (8) and (Y) ..	66,586	68,213	80,431		
															Closing balance—					
															Special funds—					
															(a) Water	6,864	7,519	8,104		
															(b) Lighting ..	..	..	..		
															(c) Latrine ..	3,125	3,354	1,928		
											Total ..	66,579	72,432	78,927	Revenue Fund ..	8,913	12,248	11,585		
											Opening balance ..	18,909	18,902	23,121						
											Grand Total ..	85,488	91,334	1,02,048	Grand Total ..	85,488	91,334	1,02,048		

In addition to the details required on the reverse, clear information should be given below under the following heads:—

(*a*) If the ordinary surplus is insufficient to meet the charges of the proposed loan, the particular steps which the municipality has taken, or has agreed to take, in order to make good the deficiency.

Information.

(*a*) The ordinary surplus is sufficient to meet the charges of the proposed loan. The expenditures in the years 1933-34 and 1934-35 were higher than our usual ordinary expenditures on water-supply owing to the re-excavation of the reserved tank at a great cost. Our annual receipts for the water rate is over Rs. 13,000 and our ordinary annual expenditure on the water-supply is about Rs. 11,000. So there is an annual surplus of nearly Rs. 2,000 on this head, which is quite sufficient to meet the annual charges for the principal and interest due on it. Our financial position is very strong and our water rate fund is quite sufficient to meet the yearly instalments of loan. Our revenues on water rate will be increased by over Rs. 1,000 from the current year due to the quinquennial assessment.

(*b*) The reserve of taxation or other possible means of increase in the revenues of the municipality. The rates at which each of the taxes mentioned in column 12 on the reverse are levied, other than tax on persons, should be stated here.

(*b*) Tax on holdings have been introduced in all the five wards of the municipality. The recent quinquennial revision of taxes as made by the Assessor, has considerably strengthened the municipal revenue and will effect an increase of the water rate by more than Rs. 1,000 annually. The taxes are levied at the following rates:—

	Per cent.
House tax	... 7½
Latrine Rate	... 6
Water Rate	... 4
Total	.. 17½ per cent. per annum.

(*c*) A statement of all outstanding loans specifying, in respect of each loan, the date when taken, the purpose (very briefly), the amount, the annual charges involved and the amount still payable.

(*c*) We have got only one outstanding loan of Rs. 5,000 which was taken on 10th March 1927 for the 1st extension of the waterworks which cost the municipality Rs. 70,850. We have up to date paid 16 instalments and the balance of the said loan now stands at Rs. 3,712. The municipality contemplates to clear up the balance of this loan out of the loan applied for now. The present half-yearly charges on the said loan is Rs. 225-2 including interest.

(*d*) Any explanations in regard to receipts and expenditure to show the true financial position of the municipality when such position is otherwise than the ordinary surplus would indicate.

(*d*) The balance of the water rate fund at the hands of the municipality stands at Rs. 8,104 on the 31st of March 1935, which shows that there is surplus of income over expenditure every year. The expenditures in the years 1933-34 and 1934-35 were higher than our usual ordinary expenditures on water-supply owing to the re-excavation of the reserved tank at a great cost. Our annual receipts from water rate fund is over Rs. 13,000 and ordinary annual expenditure on water-supply is about Rs. 11,000. So, there is an annual surplus of over Rs. 2,000 on this head, which is quite sufficient to meet the charges for the principal and interest due on it.

Hooghly.—No. 1496P.H.—12th April 1937.—In exercise of the power conferred by section 506 of the Bengal Municipal Act, 1932 (Bengal Act XV of 1932), the Governor of Bengal is pleased to confirm the by-laws framed by the Commissioners of the Bansberia Municipality in the district of Hooghly under section 269(*a*) of the said Act and published for information under notification No. 4429P.H., dated the 16th November 1936.

G. S. DUTT,
Secy. to the Govt. of Bengal.

EDUCATION DEPARTMENT.

NOTIFICATIONS.

Nadia-Dinajpur. — No. 1724Edn. — 12th April 1937.—Maulvi Khabiruddin Ahmed, District Inspector of Schools, Nadia, is transferred to Dinajpur, with effect from the date on which he joins the appointment.

24-Parganas-Burdwan. — No. 1725Edn. — 12th April 1937.—Mr. Fakhrul Islam, officiating Subdivisional Inspector of Schools, Alipore, is appointed to the Bengal Educational Service as a District Inspector of Schools, and is posted to Burdwan, with effect from the date on which he joins the appointment, *vice* Babu Satya Prasad Biswas, retired.

Rajshahi Divn.-Nadia.—No. 1726Edn. — 12th April 1937.—Maulvi Muhammad Khalilullah, Assistant Inspector of Schools for Muhammadan Education, Rajshahi Division, is appointed to act as District Inspector of Schools, Nadia, with effect from the date on which he joins the appointment, *vice* Maulvi Khabiruddin Ahmed, transferred.

Calcutta-Rajshahi Divn.—No. 1727Edn. — 12th April 1937.—Maulvi Jasimuddin Ahmed, Assistant Master, Ballygunge Government High School, is appointed to act in the Bengal Educational Service as Assistant Inspector of Schools for Muhammadan Education, Rajshahi Division, *vice* Maulvi Muhammad Khalilullah.

Darjeeling.—No. 1733Edn. — 14th April 1937.—Mr. T. Prins acted as Middle School Teacher, Victoria Boys' School, Kurseong, for the period from the 5th to 22nd March 1937, *vice* Mr. W. D. Caldeira, on deputation.

Darjeeling. — No. 1734Edn.—14th April 1937.—Mr. R. P. Hadley is appointed temporarily to act as Middle School Teacher, Victoria Boys' School, Kurseong, with effect from the date on which he joins the appointment, during the absence, on deputation, of Mr. W. D. Caldeira, or until further orders.

Calcutta.—No. 1739Edn. -14th April 1937.—Mr. Apurva Kumar Chanda of the Indian Educational Service is appointed to act, until further orders, as Principal, David Hare Training College, Calcutta, with effect from the date on which he joins the appointment on the expiry of his deputation as member of the Legislative Assembly (Indian).

Nadia-Calcutta.—No. 1740Edn.—14th April 1937.—Mr. Jitendra Mohan Sen of the Bengal Senior Educational Service is appointed to act, until further orders, as Principal, Krishnagar College, with effect from the date on which he joins the appointment on being relieved of his present officiating appointment as Principal, David Hare Training College, Calcutta.

Calcutta.—No. 1756Edn.—16th April 1937.—Dr. W. A. Jenkins, under orders of transfer as Principal, Islamia College, Calcutta, is allowed leave for the period from the 2nd July to the 12th October 1937, viz., leave on average pay for two months and thirteen days, under rules 81 (*b*) (*i*) and 82 (*b*) of the Fundamental Rules, and leave on half average pay for the remaining period, under rule 81 (*d*) of those Rules.

Darjeeling.—No. 1766Edn.—19th April 1937.—Miss R. B. Smart, Mistress of History, Dow Hill Girls' School, Kurseong, is allowed leave out of India on half average pay from the 11th March 1937 to the date prior to the commencement of winter vacation of the school for 1937-38 under rule 81 (*d*) of the Fundamental Rules in combination with the said vacation of the school under rule 82 (*d*) of the same Rules.

2. This cancels the order in notification No. 261Edn., dated the 18th January 1937.

No. 1769Edn.—19th April 1937.—The following draft of a notification which the Governor proposes to issue in exercise of the power conferred by sub-section (*1*) of section 66 of the Bengal (Rural) Primary Education Act, 1930 (Bengal Act VII of 1930), is published for the information of persons likely to be affected thereby.

2. The draft will be taken into consideration on or after 31st May 1937, and any objection or suggestion with respect thereto, which may be received by the undersigned before that date, will be duly considered:—

Draft notification.

In exercise of the power conferred by sub-section (*1*) of section 66 of the Bengal (Rural) Primary Education Act, 1930 (Bengal Act VII of 1930), the Governor is pleased to make the following rules governing the leave of the staff of the District School Board established under the said Act:—

(*1*) In these rules—

(*a*) "pay" or "substantive pay" means the amount drawn monthly by an employee of the Board as the pay other than special pay and personal pay;

(*b*) "special pay" means an addition, of the nature of pay, to the emoluments of the post granted in consideration of—

(*i*) the special arduous nature of the duties, or

(*ii*) special addition to the work or responsibility, or

(*iii*) the unhealthiness of the locality in which the work is performed;

(*c*) "personal pay" means additional pay to save a servant of the Board from a loss of substantive pay due to a revision of pay or to any reduction of pay otherwise than as a disciplinary measure or in exceptional circumstances, or other personal consideration;

(*d*) "leave salary" means the monthly amount paid by the Board to an employee of the Board on leave;

(*e*) "servants" include employees holding appointments under the Board excluding the teachers in primary schools;

(*f*) "leave" includes earned leave, leave on private affairs, leave on medical certificates and extraordinary leave;

(*g*) "earned leave" means leave earned in respect of periods spent on duty;

(*h*) "competent authority" means the Board competent to exercise such authority.

(*2*) Leave cannot be claimed as of right. Discretion is reserved to the competent authority to grant leave, to refuse or revoke leave at any time.

(*3*) Any kind of leave under these rules may be granted in combination with or in continuation of any other kind of leave.

(*4*) No leave shall be granted to a servant beyond the date on which the Board decide to compulsorily retire him.

(*5*) (*a*) The earned leave admissible to a servant in permanent employ is 1/11th of the period spent on duty, provided that when the earned leave amounts to ninety days he shall cease to earn such leave.

(*b*) The earned leave admissible to a servant not in permanent employ is one-twenty-second of the period spent on duty, provided when the earned leave amounts to thirty days he shall cease to earn such leave.

(*c*) No earned leave is admissible to a menial servant not in permanent employ.

(*6*) Leave on private affairs may be granted to a ministerial servant in permanent employ for twelve months in all during the whole period of his service and on any one occasion for not more than three months.

(*7*) Leave on medical certificate not exceeding twelve months in all during the whole period of his service may be granted to a servant in permanent employ. Such leave shall be granted only on the production of medical certificate deemed sufficient for the purpose by the competent authority.

(*8*) Extraordinary leave may be granted to any servant in special circumstances—

(*a*) when no other leave by rule is admissible, or

(*b*) when other leave is admissible, but the servant concerned applies in writing for the grant of extraordinary leave.

Except in the case of a servant in permanent employ, the duration of extraordinary leave shall not exceed three months on any one occasion.

(*9*) A servant on earned leave is entitled—

(*a*) if in permanent employ to leave salary equal to his average pay or to his average substantive pay for the twelve complete months preceding the month in which the leave is taken, whichever is greater:

Provided that the leave salary of a menial servant shall be reduced by half the amount of the pay drawn by any substitute employed in his absence.

(*b*) if not in permanent employ, to leave salary equal to his pay on the day before the leave commences:

Provided no substitute is taken in his place.

(*10*) A servant on leave on private affairs or leave on medical certificate is entitled to leave salary equal to half his average substantive pay for the twelve complete months preceding the month in which leave is taken.

(*11*) No leave salary is admissible to any servant on extraordinary leave.

Registration.

NOTIFICATIONS.

Tippera.—No. 324Regn.—13th April 1937.—In exercise of the power conferred by section 3 of the Bengal Muhammadan Marriages and Divorces Registration Act, 1876 (Bengal Act I of 1876), Government are pleased to appoint Maulvi Abul Khair Muhammad Waliullah to be a Muhammadan Registrar within the police-station of Nabinagar, in the district of Tippera.

Tippera.—No. 325Regn.—13th April 1937.—In exercise of the power conferred by section 2 of the Kazis' Act, 1880 (Act XII of 1880), Government are pleased to appoint Maulvi Abul Khair Muhammad Waliullah to be the Kazi for the celebration of marriages and the performance of other rites and ceremonies within the police-station of Nabinagar in the district of Tippera.

Mymensingh-Calcutta. — No. 330Regn. — 14th April 1937.—Maulvi Saiyid Abu Sayid Muhammad Taifoor, District Sub-Registrar of Mymensingh, is appointed temporarily to act, until further orders, as Sub-Registrar of Calcutta, with effect from the date on which he joins the appointment, *vice* Khan Sahib Quazi Mahmood-ur Rahman, appointed to act as Registrar of Assurances, Calcutta.

24-Parganas-Calcutta.—No. 331Regn.—14th April 1937.—Rai Sahib Jyotish Chandra Mookerji, District Sub-Registrar of the 24-Parganas, is appointed, temporarily, to act, until further orders, as Inspector of Registration Offices, Bengal, with effect from the date on which he joins the appointment.

24-Parganas.—No. 332Regn. — 14th April 1937.—Babu Shital Chandra Banarji, District Sub-Registrar, on leave, is appointed, temporarily, to act as District Sub-Registrar of the 24-Parganas, with effect from the date on which he joins the appointment, *vice* Rai Sahib Jyotish Chandra Mookerji, transferred.

Midnapore. — No. 335Regn. — 15th April 1937.—In exercise of the power conferred by section 3 of the Bengal Muhammadan Marriages and Divorces Registration Act, 1876 (Bengal Act I of 1876), Government are pleased to appoint Maulvi Muhammad Abdul Hadi temporarily to be a Muhammadan Registrar within the police-station of Ghatal, in the district of Midnapore, until further orders.

Midnapore.—No. 336Regn.—15th April 1937.—In exercise of the power conferred by section 2 of the Kazis' Act, 1880 (Act XII of 1880), Government are pleased to appoint Maulvi Muhammad Abdul Hadi temporarily to be the Kazi for the celebration of marriages and the performance of other rites and ceremonies within the police-station of Ghatal, in the district of Midnapore, until further orders.

Chittagong.—No. 341Regn.—15th April 1937.—In exercise of the power conferred by section 3 of the Bengal Muhammadan Marriages and Divorces Registration Act, 1876 (Bengal Act I of 1876), Government are pleased to appoint Maulvi Khabirul Huq to be a Muhammadan Registrar within the police-station of Hathazari, in the district of Chittagong.

Chittagong.—No. 342Regn.—15th April 1937.—In exercise of the power conferred by section 2 of the Kazis' Act, 1880 (Act XII of 1880), Government are pleased to appoint Maulvi Khabirul Huq to be the Kazi for the celebration of marriages and the performance of other rites and ceremonies within the police-station of Hathazari, in the district of Chittagong.

Bakarganj.—No. 347Regn.—15th April 1937.—In exercise of the power conferred by section 2 of the Kazis' Act, 1880 (Act XII of 1880), Government are pleased to appoint Maulvi Momtazuddin Ahmed temporarily to be the Kazi for the celebration of marriages and the performance of other rites and ceremonies within the police-station of Banaripara, in the district of Bakarganj.

Bakarganj.—No. 348Regn. — 15th April 1937.—In exercise of the power conferred by section 3 of the Bengal Muhammadan Marriages and Divorces Registration Act, 1876 (Bengal Act I of 1876), Government are pleased to appoint Maulvi Momtazuddin Ahmed temporarily to be a Muhammadan Registrar within the police-station of Banaripara, in the district of Bakarganj.

Dinajpur.—No. 354Regn.—19th April 1937.—Babu Satyendra Nath Mitra, District Sub-Registrar of Dinajpur, is allowed leave on average pay for four months, with effect from the 16th April 1937, or any subsequent date on which he avails himself of it, under rule 81(*b*)(*ii*) of the Fundamental Rules.

Dinajpur.—No. 356Regn.—19th April 1937.—In exercise of the power conferred by section 3 of the Bengal Muhammadan Marriages and Divorces Registration Act, 1876 (Bengal Act I of 1876), Government are pleased to appoint Maulvi Abdul Latif temporarily to be a Muhammadan Registrar within the police-stations of Dinajpur, Biral, Gangarampur, Tapan and Chirirbandar, in the district of Dinajpur, during the absence, on leave, of Maulvi Jamiruddin Ahmed, or until further orders.

Dinajpur.—No. 357Regn.—19th April 1937.—In exercise of the power conferred by section 2 of the Kazis' Act, 1880 (Act XII of 1880), Government are pleased to appoint Maulvi Abdul Latif temporarily to be the Kazi for the celebration of marriages and the performance of other rites and ceremonies within the police-stations of Dinajpur, Biral, Gangarampur, Tapan and Chirirbandar, in the district of Dinajpur, during the absence, on leave, of Maulvi Jamiruddin Armed, or until further orders.

Chittagong. — No. 362Regn. — 19th April 1937.—In exercise of the power conferred by section 3 of the Bengal Muhammadan Marriages and Divorces Registration Act, 1876 (Bengal Act I of 1876), Government are pleased to appoint Maulvi Muhammad Isa temporarily to be a Muhammadan Registrar within the police-station of Rangania, in the district of Chittagong, during the absence, on leave, of Maulvi Masud Ahmed Quereshi, or until further orders.

Chittagong. — No. 363Regn. — 19th April 1937.—In exercise of the power conferred by section 2 of the Kazis' Act, 1880 (Act XII of 1880), Government are pleased to appoint Maulvi Muhammad Isa temporarily to be the Kazi for the celebration of marriages and the performance of other rites and ceremonies within the police-station of Rangania, in the district of Chittagong, during the absence, on leave, of Maulvi Masud Ahmed Quereshi, or until further oders.

Birbhum.—No. 368Regn.—19th April 1937. —In exercise of the power conferred by section 3 of the Bengal Muhammadan Marriages and Divorces Registration Act, 1876 (Bengal Act I of 1876), Government are pleased to appoint Maulvi Moshtaq Hossain Khan, Muhammadan Registrar and Kazi of Dubrajpur, temporarily to be a Muhammadan Registrar within the police-stations of Rajnagar and Khairasole, in the district of Birbhum, in addition to his own duties, until further orders.

This cancels the orders in notification No. 266Regn., dated the 15th April 1936.

Birbhum. — No. 369Regn. — 19th April 1937.—In exercise of the power conferred by section 2 of the Kazis' Act, 1880 (Act XII of 1880), Government are pleased to appoint Maulvi Moshtaq Hossain Khan, Muhammadan Registrar and Kazi of Dubrajpur, temporarily to be the Kazi for the celebration of marriages and the performance of other rites and ceremonies within the police-stations of Rajnagar and Khairsole, in the district of Birbhum, in addition to his own duties, until further orders.

This cancels the orders in notification No. 267Regn., dated the 15th April 1936.

Midnapore.—No. 374Regn. — 19th April 1937.—Babu Shital Chandra Banarji, District Sub-Registrar of Midnapore, is allowed leave on average pay for one month and fifteen days, with effect from the 25th March 1937, or any subsequent date on which he availed himself of it, under rule 81 (*b*) (*ii*) of the Fundamental Rules.

Dacca.—No. 376Regn.—19th April 1937.—Maulvi Fazlul Karim, District Sub-Registrar of Dacca, is allowed leave on average pay for ten days, with effect from the 15th April 1937, under rule 81 (*b*) (*ii*) of the Fundamental Rules.

Dacca.—No. 377Regn.—19th April 1937.—Babu Pramatha Kumar Roy, Sadar Second Joint Sub-Registrar, Dacca, is appointed to act as District Sub-Registrar of that place, with effect from the 15th April 1937, during the absence, on leave, of Maulvi Fazlul Karim, or until further orders.

Mymensingh.—No. 380Regn.—19th April 1937.—The order in notification No. 291-Regn., dated the 31st March 1937, granting leave on average pay for one day, on the 25th March 1937, to Maulvi Saiyid Abu Sayid Muhammad Taifoor, late District Sub-Registrar of Mymensingh, is hereby cancelled.

Rangpur.—No. 383Regn.—19th April 1937. —In exercise of the power conferred by section 3 of the Bengal Muhammadan Marriages and Divorces Registration Act, 1876 (Bengal Act I of 1876), Government are pleased to appoint Maulvi Muhammad Fazlur Rahman temporarily to be a Muhammadan Registrar within the police-stations of Lalmonirhat and Fulbari, in the district of Rangpur, during the absence, on leave, of Maulvi Naziruddin Ahmed, or until further orders.

Rangpur.—No. 384Regn.—19th April 1937. —In exercise of the power conferred by section 2 of the Kazis' Act, 1880 (Act XII of 1880), Government are pleased to appoint Maulvi Muhammad Fazlur Rahman temporarily to be the Kazi for the celebration of marriages and the performance of other rites and ceremonies within the police-stations of Lalmonirhat and Fulbari, in the district of Rangpur, during the absence, on leave, of Maulvi Naziruddin Ahmed, or until further orders.

T. M. Dow,

Secy. to the Govt. of Bengal (offg.).

Orders by the Inspector-General of Registration, Bengal.

Tippera-Noakhali. — No. 185.—12th April 1937.—This department notification No. 140, dated the 20th March 1937, granting leave for 25th March 1937, to Maulvi A. B. Sharfuddin Ahmad, Sub-Registrar of Fulgazi, in the district of Noakhali, when attached to the Sadar Registration office at Comilla, Tippera, is cancelled.

Hooghly.—No. 186.—12th April 1937. — Babu Govinda Charan Samanta, Sub-Registrar of Dhaniakhali, in the district of Hooghly, is allowed leave on average pay for four months, under rule 81 (*b*) (*ii*) of the Fundamental Rules, with effect from the date on which he may be relieved.

Hooghly-Midnapore.—No. 187.—12th April 1937.—Maulvi Muhammad Manir, Sub-Registrar of Haripal, in the district of Hooghly, under orders of transfer to Anandpur, in the district of Midnapore, is appointed to act as Sub-Registrar of Dhaniakhali, in the district of Hooghly, during the absence, on leave, of Babu Govinda Charan Samanta, or until further orders.

Calcutta. — No. 188.—12th April 1937. — Babu Saurindra Nath Sen, Sub-Registrar attached to the office of the Registrar of Assurances, Calcutta, is allowed leave on average pay for five days, under rule 81 (*b*) (*ii*) of the Fundamental Rules, with effect from the 30th March 1937.

Tippera.—No. 189.—12th April 1937.—Babu Lochan Mani Nath, 3rd Joint Sub-Registrar of Laksham at Chandina, in the district of Tippera, is allowed leave on average pay for three months and fifteen days, under rule 81 (*b*) (*ii*) of the Fundamental Rules, in extension of the leave granted to him in this department notification No. 52, dated the 5th February 1937.

Tippera.—No. 190. — 12th April 1937. — This department notification No. 121, dated the 9th March 1937, granting leave on average pay for 25th March 1937 to Maulvi Habibur Rahman, No. II, Sub-Registrar of Daudkandi, in the district of Tippera, is cancelled.

Tippera.—No. 191. — 15th April 1937. — Babu Ratish Chandra Ray, Joint Sub-Registrar of Nabinagar at Bancharampur, in the district of Tippera, is allowed leave on average pay for twenty-one days, under rule 81 (*b*) (*ii*) of the Fundamental Rules, with effect from the 5th April 1937, or any subsequent date on which he may be relieved.

Tippera. — No. 192. — 15th April 1937.—Maulvi Wakiluddin Ahmed Chaudhuri, Probationary Sub-Registrar attached to the Sadar Registration office at Comilla, Tippera, is appointed to act as Joint Sub-Registrar of Nabinagar at Bancharampur in the same district, during the absence, on leave, of the permanent incumbent, or until further orders.

Bogra-Hooghly. — No. 193. — 15th April 1937.—Babu Bhupendra Nath Gupta, Sub-Registrar of Shariakandi, in the district of Bogra, is appointed to be Sub-Registrar of Goghat, in the district of Hooghly.

Rangpur-Bogra. — No. 194. — 15th April 1937.—Maulvi Mukhlesur Rahman Chaudhuri, Sub-Registrar of Palashbari, in the district of Rangpur, on leave, is appointed to be Sub-Registrar of Shariakandi, in the district of Bogra.

Chittagong.—No. 195.—15th April 1937.—Babu Hemendu Bikash Roy, Sub-Registrar of Raojan, in the district of Chittagong, was on leave on average pay for one day, on the 25th March 1937, under rule 81 (*b*) (*ii*) of the Fundamental Rules.

Midnapore.—No. 196.— 16th April 1937.—This department notification No. 137, dated the 20th March 1937, granting earned leave on average pay for four days to Babu Bishnupada Sinha, officiating Sub-Registrar of Khajri, in the district of Midnapore, is hereby cancelled.

Khulna.—No. 197.—17th April 1937.—Maulvi Badiuzzaman, Joint Sub-Registrar of Kaliganj at Assasuni, in the district of Khulna, is allowed leave on average pay for four days, under rule 81(*b*) (*ii*) of the Fundamental Rules, with effect from the 14th April 1937.

Bakarganj.—No. 198.—17th April 1937.—Babu Akshay Kumar Ghosh, Joint Sub-Registrar of Patarhat (Mehdiganj) at Muladi, in the district of Bakarganj, was on leave on average pay for five days, under rule 81(*b*) (*ii*) of the Fundamental Rules, with effect from the 30th March 1937.

Burdwan.—No. 199.—17th April 1937.—Babu Shib Chandra Banerji, M.B.E., Sub-Registrar of Asansol, in the district of Burdwan, is allowed leave on half average pay for two months, under rule 81(*d*) of the Fundamental Rules, in extension of the leave granted to him in this department notification No. 720, dated the 24th December 1936.

S. CHATTERJEA,

Inspector-General of Registration, Bengal.

FINANCE DEPARTMENT.

Audit.

NOTIFICATIONS.

No. 3881F.—14th April 1937.—In exercise of the powers conferred by rule 16 of the Treasury Rules, Bengal, made under section 151 of the Government of India Act, 1935, the Finance Minister, after consultation with the Accountant-General, is pleased to make the following modifications :—

Pages 120-121—T. R. Appendix I—41—Veterinary.—Against the minor head "Subordinate establishment", *substitute* the following for the sub-head "Glanders and College staff and other establishment" and the entries against it :—

Sub-head.	Drawing Officer.	Classes of bills drawn.	Section, if any, into which each bill should be drawn.	Remarks.
(*a*) Glanders and College staff.	Principal, Bengal Veterinary College.	Pay and travelling allowance bills of self and establishment and contingent bills.	..	Principal, Bengal Veterinary College, countersigns travelling allowance bills of all officers subordinate to him.
(*b*) Other establishment.	Director, Civil Veterinary Department.	Ditto ..	..	Director, Civil Veterinary Department, countersigns travelling allowance bills of all officers of the Civil Veterinary Department.
	Assistant Directors, Civil Veterinary Department.	Ditto.		
	Superintendent, Veterinary Vaccine Section.	Pay bills of self and establishment.		

Page 29—S. R. 67.—Insert the following as clause (*vi*) below Note 2 :—

(*vi*) The Assistant Director, Civil Veterinary Department, Western Range, "for" the Director, Civil Veterinary Department, pay and contingent bills in respect of the Director's office when he is out on tour on the understanding that the responsibility for any irregularity will continue with the Director.

No. 4325F.—17th April 1937.—In exercise of the powers conferred by rule 16 of the Treasury Rules, Bengal, made under section 151 of the Government of India Act, 1935, the Finance Minister, after consultation with the Accountant-General, is pleased to make the following amendment :—

Pages 92-93—T. R. Appendix I.—Insert the following under "8-Provincial Excise" sub-head "District charges" :—

Drawing Officer.	Class of bills drawn.	Section, if nay, into which each bill should be divided.	Remarks.
Deputy Commissioner of Excise and Salt, Central Detective Department.	Contingent bills of the Central Detective Department and establishment bills of the executive staff attached thereto.	....	Countersigns travelling allowance bills of the staff subordinate to him.

No. 4182F.—16th April 1937.—In exercise of the powers conferred by section 241 (2) (b) of the Government of India Act, 1935, the Governor is pleased to direct that the following amendments shall be made in the General Provident Fund (Bengal Services) Rules, namely:—

Amendments.

1. In sub-rule (1) of rule 14 for the words "according to the method of calculation prescribed from time to time by the Government of India" the following shall be substituted:—

"by the Local Government".

2. For the proviso to sub-rule (1) of rule 14, the following shall be substituted:—

"Provided that, if the rate of interest determined for a year is less than 4 per cent., all existing subscribers to the Fund in the year preceding that for which the rate has for the first time been fixed at less than 4 per cent. shall, if they were in service on the 31st March 1937 and either

(a) were eligible on the 31st March 1937 to join the Fund or

(b) would have been so eligible on the 31st March 1937 had they not been required to subscribe to a contributory Provident Fund or

(c) came on the 31st March 1937 within the purview of the 3rd proviso to rule 4 of those rules,

be allowed interest at 4 per cent."

CORRIGENDUM.

No. 4328F.—19th April 1937.—The Government of Bengal are pleased to issue the following corrigendum to the General Provident Fund (Bengal Services) Rules:—

Pages 28-29.—Delete Appendix E.

Miscellaneous.

NOTIFICATION.

No. 1720Mis.—15th April 1937.—In exercise of the power conferred by the explanation to section 25 of the Negotiable Instruments Act, 1881 (XXVI of 1881), read with sub-paragraph (2) of paragraph 8 of the India and Burma (Transitory Provisions) Order, 1937, the Governor is pleased to declare the 12th May 1937 to be a public holiday on account of the celebration in India of the Coronation of His Majesty the King Emperor of India.

D. GLADDING,

Secy. to the Govt. of Bengal.

DEPARTMENT OF COMMERCE AND LABOUR.

ORDER.

No. 4336Com.—12th April 1937.—Whereas on the complaint of Sreemati Sarbati Debi of Ratan Mahal, Kurseong, the Governor in Council was pleased in resolution No. 8533-Com., dated the 10th November 1936, to appoint under section 138 of the Indian Companies Act, 1913 (VII of 1913), Messrs. Ray and Ray, Chartered Accountants of 6, Church Lane, Calcutta, as Inspectors to investigate into the affairs of Messrs. Hurdeodass Company, Limited, and to report thereon with special regard to the points raised in the complaint;

And whereas Messrs. Ray and Ray submitted their report on the 4th March 1937, and a perusal thereof shows that the complaint made by Sreemati Sarbati Debi against Messrs. Hurdeodass Company, Limited, is justified;

Now, therefore, in exercise of the powers conferred by sub-section (3) of section 141 of the said Act read with sub-paragraph (2) of paragraph 8 of the India and Burma (Transitory Provisions) Order, 1937, the Governor is pleased to direct that the sum of Rs. 600 (six hundred rupees only) being the consolidated remuneration due to Messrs. Ray and Ray for their said investigation into the affairs of Messrs. Hurdeodass Company, Limited, shall be paid by the said Company.

NOTIFICATIONS.

No. 4350Com.—12th April 1937.—Mr. J. Parkinson, Chief Engineer, the Calcutta Electric Supply Corporation, Ltd., is appointed to be a member of the Licensing Board, Bengal, constituted in accordance with the provisions of regulation 2 of the Regulations published under this Government notification No. 12230Com., dated the 24th December 1935, *vice* Mr. F. T. Homan, M.I.E.E., A.M.I.Mech.E., resigned.

A. HUGHES,

Dy. Secy. to the Govt. of Bengal.

No. 5080Com.—17th April 1937.—The following report of the Court of Enquiry appointed by the Government of Bengal under section 21 (*1*) of the Indian Mines Act, 1923 (IV of 1923), is published as required under section 22 of the said Act.

A. HUGHES,

Dy. Secy. to the Govt. of Bengal.

Report under section 21 of the Indian Mines Act on the disaster at Poidih Colliery which occurred on the 18th of December 1936.

1. *Ownership and management of the colliery.*—The Poidih Colliery belongs to the Bengal Coal Company, Limited, whose Managing Agents are Messrs. Andrew Yule and Company. This and other collieries belonging to the Company at the time of the accident were under the supervision of Mr. C. W. G. Hindley, who was appointed Acting Chief Mining Engineer on the death of Mr. Cunningham who was killed in a mining accident in July 1936. Mr. Cunningham had succeeded Mr. Wardlow in March 1936. Mr. R. P. Rosser was Mr. Hindley's Personal Assistant and made frequent inspections of Poidih Colliery on behalf of Mr. Hindley, who as Chief Mining Engineer of the Company had charge of 20 to 30 collieries. The Manager of the mine was Mr. E. Dobbs. Mr. Jas Thomson, Chief of the Survey Department, Messrs. Andrew Yule and Company, also assisted Mr. Hindley by inspecting this and other mines on his behalf.

Mr. R. H. Worthington, a Director of Messrs. Andrew Yule and Company, has assured us that the whole technical direction of the colliery was left to their Chief Mining Engineer, whose duties included the laying out of the workings and the control of the mine through the Manager; and who, as Agent, was responsible together with the Manager to the Mines Department for the safety of the mine.

We are satisfied that the officers employed by the Company, from the Manager upwards, were all fully qualified men.

2. *Description of the colliery.*—Poidih Colliery is situated about 7 miles from Asansol and 2½ miles from Sitarampur. It consists of workings in the Dishergarh seam. A plan of the mine, brought up to date by the Chief Inspector of Mines, is attached to this report.*

There are two shafts, 740 and 754 feet deep. Coal was reached in 1931 and since then the mine has been worked continuously. The seam is about 15 feet thick and the coal is of high quality.

At the time of the accident, extraction of pillars was going on in the places marked on the plan as the main west dip depillaring district and No. 6 east dip depillaring district. In two other areas near the shaft, depillaring had been done. One of those areas was sealed off by stoppings. There are two areas of disturbed ground both adjoining the shafts. The seam is traversed by several dykes, most of which are in the neighbourhood of the shafts.

3. *Description of the accident.*—The evidence of Mr. Davies, Manager of the adjoining colliery of Bejdih, fixes the time of the accident with accuracy as 10-52 standard. He heard the noise of the explosion from a distance of about ¼ of a mile, and about 4 seconds afterwards perceived a large cloud of black smoke and dust with white smoke in the middle come out of each shaft simultaneously. He went straight to Poidih Colliery, and found, on arrival, that smoke was still coming up from each shaft but in less quantity. About 2 minutes after his arrival, *i.e.*, about 12 minutes after the explosion, ventilation began to resume its normal course, *i.e.*, down the downcast and up the upcast shaft. The latter shaft continued to emit smoke for some time.

A second eye-witness of the explosion, Banku Bowri, surface trammer, was shunting empty tubs at the top of No. 1 shaft, when he saw smoke coming from the pit and then heard an explosion. He jumped off the pit bank and escaped with his life. There were four men with Banku, at the time, namely, Fakir, the signalman, who was killed

*Not printed.

by the explosion, and three trolley men, who escaped. In addition to Fakir's, a second body and parts of a third body were found on the surface, but they could not be identified. It seems probable that they were blown up the shaft by the explosion.

The state of the pit head just after the explosion has been clearly described by Mr. N. Barraclough, Inspector of Mines, a member of the Coal Mining Committee. He and other members of the Committee were returning to Asansol from Saltore Colliery, and passed by Poidih at 11-35 a.m. on the 18th December. Meeting an excited crowd, they went at once to the colliery arriving five minutes later. Mr. Barraclough's description, given *verbatim*, is as follows:—

"*At No. 1 Downcast Shaft.*—The west cage had been blown to the top of the headgear, where it was held. The rope was detached from its pulley and the overwinding bell boxes, with the two heavy girders supporting them, had been blown over the pulley wheels. On the east side, the pulley wheel had been broken and the top girders bent. The cage keps and the heavy girders supporting them had been dislodged and left suspended 3 feet above their original position. The wall, 3 feet in thickness, which surrounded the shaft from ground level to the banking level, had been blown down, one block of masonry, weighing about a ton, having been shifted about 20 feet from the shaft. Empty tubs on the banking level had been smashed and some had been blown off the banking level. A steel corrugated sheet shelter over the banking level had been destroyed. Under the debris on the south side of the shaft was the mutilated body of the banksman.

No. 2 Upcast Shaft.—The pit top covering had been blown into the headgear. The west cage which had been at the top of the shaft at the time of the accident was resting on the keps, but the other cage which had been near the bottom of the shaft at the time of the accident had been blown up the shaft into the headgear, a distance of over 700 feet. The top of the shaft was blocked by a tangled mass of ironwork and ropes. The fan was standing, with the fan doors open.

About 20 yards south-east of the shaft there was a body so badly smashed as to be beyond recognition. The bonnets of three safety lamps which had probably been those used at the bottom of the shafts were also found on the surface.

There was black smoke and soot coming up the upcast shaft".

It is clear that the violence of the explosion within the mine must have been terrific, and its extent considerable, in order to cause such damage at the pit head.

4. *Measures taken immediately after the explosion.*—Mr. Barraclough on his arrival at 11-40 a.m. assumed charge of the situation in his official capacity as Inspector of Mines. He sent word to the Chief Inspector of Mines, who was at Dhanbad, and requisitioned policemen to control the gathering crowd. He asked the head clerk to inform him about the number of persons underground, and learned that the number was 151 persons, including the Manager. This number was subsequently found to be incorrect, for reasons which will be explained later on.

Mr. Barraclough proceeded then, in consultation with several Mine Managers who had arrived at the spot, to make preparations for descending the downcast shaft. It was obvious that several hours' work was necessary before even temporary arrangements for descent could be made. Descent of the upcast shaft was out of the question owing to smoke and asphyxiating gases. It was realised by all present that there was very little possibility of any person being left alive in the mine, but Mr. Rosser and Mr. Thomson, who had arrived, pointed out that there was a bottle-neck at the bottom of the North East District, and suggested that it was possible for persons in that district to be still alive. The only thing that could be done to help such persons was to increase the quantity of fresh air going into the mine, by re-starting the fan, and suspending brattice cloth round the headgear and over the cross girders of No. 2 upcast shaft, in order to form a temporary airlock, so that air might be effectively exhausted from the pit.

The fan was started at 1 p.m. and by 1-30 p.m. was doing effective work. The bratticing was completed at 2 p.m. Simultaneously with this work, clearing of debris at No. 1 pit head went on, and arrangements were taken in hand for the purpose of bringing into use a sinking bucket for lowering an exploratory party into the mine. This work was completed by 8-45 p.m.

In the meantime, the Chief Inspector of Mines had arrived (at 1-45 p.m.). He was informed of the arrangements made, and approved of them. Mr. Barraclough stated that he anticipated that the explosion would be followed by a fire, and had kept this danger clearly in view. It was realised by all present that exploratory work would be difficult and dangerous, but that the attempt would have to be made, in view of the possibility (remote though it was) that some persons might still be alive, below ground.

5. *Exploratory work after the disaster—1st Party.*—Programme for exploratory work was drawn up by the Chief Inspector, and at 9 p.m. a party consisting of Mr. Barraclough (leader), and Messrs. Wilkinson, Barron and Rosser descended the shaft in a bucket, with safety lamps, electric torches, some light tools, and a cage of birds. Descent had to be slow and cautious, owing to obstructions in the shaft. There was also danger, during the descent, from loose brickwork. Bottom was reached at 9-30 p.m. The condition of the bottom of the shaft is thus described by Mr. Barraclough:—

"The protective roofing of the shaft, consisting of a heavy concrete and girder structure on both sides, had been blown inwards and rested on the top of the cage. There were loose guide ropes coiled on the top of other debris. A wall of brickwork in mortar about 30 inches thick, at one side of the shaft, had been blown away. A number of tubs, both full and empty, had been driven into the shaft bottom".

It was decided to explore the east side first. Mr. Barron was left at the bucket to give signals. There was a clear air current in the shaft bottom. The party climbed over the debris in the shaft bottom and on to a row of full tubs in the east side level. At the side of the tub there was dust 2 feet in thickness. Evidence of great violence was found at the end of the set of full tubs. A piece of rock weighing about 80 lbs. had been carried along the level a considerable distance and had knocked a hole through the steel plate of the end tub. The full tubs, of which there were twelve, had not been derailed. At the point (B) on the plan (Plan No. 2) the wall in the cross-cut had fallen into the level. At the point (A) there was white smoke at the roof. At the point (C) there was a fall of roof, forming a cavity which was filled with white smoke. Beyond the point (C) the whole roadway was filled with white smoke.

All the ventilation stoppings which could be examined had been blown to considerable distances and the bricks broken to small pieces. At the point (D) the stopping in the gallery had been blown down and the bricks broken to small pieces and strewn from one shaft level to the other. The air was clear but had an odour characteristic of "gob-stink".

On the west side of the shaft bottom, empty and full tubs were found tightly packed across the full width of the roadway. Some of the tubs had been overturned, others canted at various angles, and one empty tub had been lifted on to the top of others and jammed against the roof. In the cross-cut gallery (H) there were four empty tubs, one being on the top of the others. Two bodies were found at the points x.x. The limbs were broken, the hair appeared to have been singed and the skin on the palms of the hands and the soles of the feet was peeling off, indicating burning. The bodies were badly smashed and it is probable that they had been carried a considerable distance by the force of the explosion. At (G) there was thick white smoke coming out of the rise gallery and drifting across the level for a depth of two or three feet from the roof. Fresh air was passing along the level under the smoke as well as short circuiting down the dip gallery with the smoke into the return airway. A test was made for inflammable gas at this point and a full "cap" was obtained indicating at least 4 to 5 per cent. of "inflammable gas". Mr. Barraclough assumed from this that the rise workings were full of inflammable gas combined with other gases. The Chief Inspector of Mines considers, and we agree, that this assumption was correct.

By this time Mr. Barraclough had a severe headache, and his knees were shaking probably because he had advanced further than the others into the noxious gases to make the tests. Moreover, the party had been underground for more than the time allotted to them by the Chief Inspector of Mines, *viz.*, one hour. They therefore returned to the shaft bottom and re-ascended. The time was then 10-15 p.m.

While the other three of the party had been away from the shaft bottom, Mr. Barron had gone into a rise gallery to the point (F) where

he found a stopping blown down and smoke near the roof. At the point (E), a large electric transformer, weighing about a ton, had been blown over in a direction away from the shaft.

6. *Conference after the first exploratory party.*—The Chief Inspector of Mines, after receiving the report of the exploratory party, held a conference with the members of the party, Mr. Worthington, a Director of the Company, the Agent and several of the Company's Colliery Managers, besides other Mining Engineers. The conference was unanimously of opinion that conditions underground were very dangerous, and that it seemed impossible that any person left underground could have survived.

The Chief Inspector of Mines considered that before any further exploratory work could be undertaken with a reasonable measure of safety, the top of the downcast shaft should be further cleared and loose brickwork removed from the sides of the shaft. It was decided to carry out this work during the night and to attempt further exploration the following day.

7. *Second exploratory party.*—By 10-45 on the 19th of December, preparations were complete for the second descent, which commenced at 11 a.m. The party consisted of Messrs. Barraclough, Wilkinson, Barron, and an overman of the colliery, Babu A. N. Sen Gupta. They got traces of "gob-stink" when passing the Burra-dhemo "inset" on the way down the shaft.

The overman was left at the bottom and the rest of the party continued to explore.

On the west side at the point (G) it was found that the white smoke had increased and had spread along the roof almost to the bottom of the shaft. The quantity of air passing along the level was decidedly less than on the previous night. At this point a test showed the presence of inflammable gas. A sample of the atmosphere was also taken. At the point (I) the pump pipes had been broken and the corrugated roof sheeting had fallen across the pumps. The wall against the shaft side had been destroyed. At the point (J) 3 per cent. of inflammable gas was found in the air and a sample of the atmosphere taken. The samples of air taken showed the presence of inflammable gas, carbon dioxide, and a deficiency of oxygen. One of them gave 1 per cent. of carbon monoxide but the other showed none of that gas. The conditions in the upcast pit bottom were as follows:—

"The heavy protective roofings at the shaft bottom had been blown inwards and had pushed the guide ropes together. The guide ropes appeared to be intact and no other material damage was observed. On the east side at (D) tests for inflammable gas were made and it was found that the main body of the air travelling towards the upcast shaft contained 2½ per cent. of inflammable gas. A safety lamp, which appeared to be undamaged, was seen lying near the point (D). A change had taken place at the point (D). The atmosphere which had been clear the previous night had become 'foggy'. At (B) white smoke or vapour was coming out of the rise gallery and passing across the level into the dip gallery 'K'. There was also white smoke or vapour passing along the level from the direction of (C) and visibility was only possible for a short distance along the floor beyond the point (K). A test for inflammable gas at the point (K) gave a full 'cap'. The birds which were being carried became affected and were found to be dead shortly after the party reached the surface at about 12-15 p.m."

The party reported to the Chief Inspector of Mines at once, all of them being of opinion that conditions below ground were worse than on the previous occasion.

8. *Attempt to get response from those entombed.*—The possibility of anyone being alive underground seemed now more remote than ever. No sign of life had been noticed by either exploratory party, and Mr. Barraclough had got no response to his shouts when below ground. The whole mine seemed to be full of asphyxiating gases and it was impossible for any exploratory party to proceed for any distance. If any person had survived the explosion (which was most improbable) it seemed practically certain that he must have been asphyxiated. As a last resort, however, Dr. Penman arranged for Mr. D. Heron, Manager of Sodepur No. 9 and 10 pits, to traverse the barrier between his colliery and Poidih and to knock on the coal. This was carried out over the whole length of the accessible barrier between Poidih and Sodepur, but no response was obtained.

9. *Conference after the second explorators' party.*—After the second party reached the surface, the Chief Inspector held another conference with the officials of the Company, Agents, and Managers of collieries and members of the exploratory party.

There was a considerable body of opinion in favour of closing the mine at once, in view of the probable existence of fire in the mine and the danger of another explosion, if fresh air continued to be circulated. The Chief Inspector gave this proposal most careful consideration and decided that he could not agree to it without obtaining the opinion of other Mining Engineers who had knowledge of underground fires. He agreed, however, to a temporary stoppage of the fan, in order that the gases from the mine might come up the upcast shaft in a less diluted form, and might be examined in this state, from the surface, in order to estimate the probable conditions in the interior of the mine. It was argued, with considerable force, that the whole system of ventilation must have been wrecked by the explosion. Fresh air, therefore, was not reaching the recesses of the mine, but was passing, by a short circuit, down one shaft and up the other.

10. *Final conference about closing the mine.*—The final conference of experts took place on 20th December, and lasted from 9-30 a.m. till noon. It was attended by a large number of experienced Mining Engineers from both the Raniganj and Jharia coalfields. The most experienced Engineers were of opinion that the smell at the top of the upcast shaft indicated the presence of fire in the mine. Messrs. Barraclough, Wilkinson and Barton, members of both exploratory parties, had formed the same opinion from the conditions observed by them below ground. The conference were unanimously of opinion that there was no possibility of anyone being alive in the mine, and that the probability was that all were dead shortly after the explosion. Opinion was unanimous that the shaft should be sealed. The Chief Inspector then agreed to the sealing of the shafts. He has placed it on record that he came to this decision with extreme reluctance and a heavy heart, because no other course was open to him.

11. *Remarks on the action taken subsequent to the accident.*—We are definitely of opinion that the action taken after the accident was prompt and adequate, considering that no trained rescue team equipped with the necessary apparatus was available, that the exploratory work was well organised and that the members of the exploratory parties carried out their dangerous and, in some cases, self-imposed duties, with great courage, as well as with discretion. Further exploratory work would have been useless and dangerous, and the final decision to close the mine was supported by a weighty body of professional opinion.

12. *Prospect of re-opening the mine.*—It seems unlikely that the mine will be re-opened for several months, and after re-opening, it will take some time before the whole mine can be safely explored. After re-opening operations have been finished, detailed examination of the mine may furnish more definite evidence regarding the cause of the disaster. In the meantime this report is being submitted on the basis of the evidence at present available.

13. *Uncertainty regarding cause of the accident.*—The available evidence is at present insufficient to justify a definite finding as to the causes of the disaster, and after carefully considering the plan of the mine and the descriptions given by various witnesses of the conditions below ground before and after the accident we find it diffcult to explain how an explosion of such great violence could occur.

As no explosives were used in the mine, it is extremely probable that the accident had its origin in the accidental ignition of an accumulation of inflammable gas rather than coal dust, but there is no definite evidence to show from what part of the mine the explosion originated, how it was propagated through the galleries, or what was the igniting cause.

14. *The igniting cause.*—Any one of the following causes may have originated a gas explosion:—

(*a*) A defect in, or accidental damage to, a safety lamp.
(*b*) Misuse of a safety lamp in the presence of gas.
(*c*) A light from a match or other apparatus for producing a light.
(*d*) A spark from electrical apparatus.
(*e*) A spark from some other accidental cause, *e.g.*, a falling stone in a goaf, or a runaway tub.

15. *Coal dust and gas as probable causes.*—It is more easy to explain the violence of the explosion if it is assumed that a secondary explosion of coal dust followed the initial gas explosion. It is also possible that the original explosion may have released an accumulation of gas and so caused secondary explosions.

Wherever the explosion originated, and however it was propagated, it seems probable, from its great violence and from the way in which its force was directed from both sides towards No. 1 shaft, that it was not one explosion only, but a series of separate explosions following one another in quick succession from one part of the mine to another. A gas explosion followed by a coal dust explosion may have been followed again by another gas explosion.

An air blast in one of the goaves might raise a cloud of coal dust in the adjacent galleries which the ignition of inflammable gas would explode. Then this coal dust explosion might, by breaking down the stoppings of the walled off goaf, release and almost simultaneously explode inflammable gas which had accumulated behind those stoppings.

16. *Where the main explosion occurred.*—The main explosion which wrecked the mine probably occurred at some distance from the shafts. No flame was seen coming out of the pit at the time of the explosion, and there was no evidence of flame, in or in the vicinity of, the shafts after the explosion, which forced itself with great violence through both shafts. And from the observations of the exploratory parties, it seems that the force of the blast came towards the downcast shaft almost equally from both sides. Mr. Barraclough has deposed that the exploratory party found soot but no signs of coking. If a coal dust explosion is assumed, this fact points towards the same conclusion, namely, that the explosion probably originated at some distance from the shaft (*vide* pages 19 and 20, Bulletin 167, U. S. A. Bureau of Mines, quoted by Mr. Barraclough in the note appended to his evidence).

17. *Places where gas may have accumulated.*—Let us now consider, having regard to the plan of the mine, in what part of it such an explosion could possibly originate.

The mine is one in which inflammable gas has been detected from time to time. In one place, as the evidence shows, gas was given off continually in very small quantities, and it is possible that even smaller quantities were elsewhere coming into the workings without being detected. But since the 27th of May previous to the accident, no inflammable gas had been reported as found in any of the workings. Before that date, gas had been detected occasionally in working faces, and had been dealt with in the usual way by dilution with air from the ventilating current. In recent months gallery driving had reached the boundaries in practically every part of the mine, and at the time of the accident only two galleries remained to be driven through the coal. It is possible for isolated pockets of gas to be encountered in the small galleries which are driven to split pillars before extraction, or even in the pillars themselves during extraction. But it is in gallery driving proper that gas is most frequently tapped, so the management had very little reason to expect to tap a fresh source of gas in the coal seam.

18. *Possibility of gas in the goaves.*—But, in addition to the danger of gas from this source, there is the possibility that gas may have lodged in some of the goaves created by the extraction of coal pillars, and may have been suddenly expelled by a caving-in of the roof. Such goaves existed in the following four districts:—

(1) *The Main West Dip District.*—Here coal extraction was going on at the time of the accident. A goaf had been formed, covering an area of about 500 feet long between barriers and 100 to 250 feet in breadth from the extreme dip upwards. The roof had fallen to a height of from 10 to 30 feet above the seam, but the main roof had not come down. The overmen and sirdars in the relays preceding the day relay of 18th December state that the goaf was quiet, that is, no further falls of roof were imminent. Inspections for gas, at the edge of and inside the goaf, had been made by the Manager and others from time to time, but no gas had been found. These tests were, however, not conclusive. It was impossible to reach the extreme height in order to test for gas, and after the first roof fall it is possible that an accumulation of inflammable gas remained undetected in the cavities and in the breaks or joints above.

(2) *No. 6 West Dip District.*—This is situated nearer the shafts than the first mentioned goaf. It is a smaller excavation, its dimensions being 350 feet long and 50 to 150 feet broad, from dip to rise. It also had reached its dip barrier limit and was being brought backwards in the process of pillar extraction. On the 18th December, and for some time previously, coal extraction in this area had been at a standstill owing to shortage of miners, but the usual statutory inspections were being made. Some local roof falls had already taken place but no further falls were considered to be imminent. As in the main west district, it is possible there was some accumulation of gas in the roof cavities.

(3) *No. 5 West Crosscut District.*—This adjoins the last mentioned district and is separated from it on its west side by a coal barrier 70 feet thick, containing one opening in which a masonry water dam had been built. The dimensions of this goaf were roughly 500 feet square, and on the rise side, for a length of about 200 feet, it adjoins the shaft pillar. Unlike the other depillaring districts, it had been worked out, and was isolated from the rest of the mine by seven masonry stoppings of substantial construction, in addition to the water dam mentioned above. The height up to which the roof had fallen was unknown. It is probable that gas had lodged in the roof cavities here.

The late Manager, on one occasion at least, found inflammable gas outside these stoppings and reported the fact to Mr. Rosser. The gas was dispersed by increasing the ventilating current outside the stoppings. This discovery indicates that there was probably some inflammable gas behind these stoppings. Water was accumulating inside the goaf and had risen to above the dam level. There was an outlet pipe in the dam which had been blank-flanged. The only escape for air or gas compressed by the rise of the water would be through or around the edges of the stoppings. It does not appear that the water edge had reached the site of the stoppings. The east edge of the goaf was at a dyke which continued across the shaft levels and to the rise

(4) *No. 6 East Dip District.*—Lies to the east of the district just described and is separated from it by a solid barrier described on the plans as "disturbed ground," of an average width of about 200 feet. Extraction had been started, as in the other districts, from the dip barrier, and a goaf had been formed about 450 feet long and 200 feet broad from dip to rise. At one point, for a short distance of 50 feet, the goaf was within 60 feet of the main return level of No. 2 pit. Owing to the shortage of labour, there had been no actual cutting of pillars in this district recently, but only a little roof coal cutting. The roof was reported quiet within the goaf.

This goaf is traversed by several small dykes. The disturbed ground on the west, likewise, has dykes and a fault running through it. From one of these dykes in the shaft main level the sound of gas escaping in small quantity was always to be heard. This goaf possibly contained some inflammable gas. No further falls of roof were expected, according to the night shift officials.

19. *Possibility of explosion of gas in the goaves.*—The method of pillar-extraction followed in this mine, namely, working from the dip boundaries towards the rise, was calculated to minimise accumulation of gas in the goaves. Such accumulation would tend to begin only after the first cavity was formed. The gas would then be liable to expulsion by roof falls, and to become ignited after expulsion under certain circumstances. Though all goaves were reported as quiet and without any roof weighting, in the relay preceding the one during which the explosion occurred, the possibility of a roof fall cannot be ignored.

20. *Possibility of gas explosion elsewhere than near the goaves.*—Returning to the possibility of a gas explosion in the few remaining "whole" workings, that is, on the East Rise Gallery District, we think this to be extremely unlikely as the source of the disaster, although gas might be emitted from the dyke which forms the rise boundary of this district. This dyke is one of those which were suspected of giving off the gas which caused an explosion at the adjoining Aldih Colliery in November 1933. But in Poidih Colliery, no emission of gas from this dyke had been detected, although it had been touched by four galleries. Assuming that an undetected quantity was present and exploded, it could not have caused so serious a disaster, as the quantity must have been small and the district being very wet, no

propagation by coal-dust would have been possible. Accumulations of inflammable gas in the old workings to the rise of the shafts on both east and west sides were only remotely possible. These workings were regularly inspected and were kept ventilated throughout.

21. *General conclusion regarding nature of the explosion.*—We agree with the opinion expressed by the Chief Inspector of Mines that the disastrous results of the explosion were due either to the ignition of a considerable body of a highly explosive mixture of fire-damp and air, or to a comparatively smaller body of this mixture followed by an explosion propagated by fine coal-dust. On no other assumptions can we explain the extent and violence of the explosion.

22. *Suspicion falls on the depillaring districts.*—Now, if combustion of coal-dust played a part in the explosion, it seems to us that the primary ignition of inflammable gas probably took place in the neighbourhood of one of the four districts where depillaring operations were or had been in progress. Our reasons for this opinion are, firstly, that in these districts an accumulation of inflammable gas to cause the initial explosion could more easily occur, through expulsion from the goaves, than in the rise workings, whether old or in progress; and secondly, that in the rise workings, it was practically impossible for a coal-dust explosion to be propagated, as the district is naturally wet throughout.

23. Of the four depillaring districts, we consider that the Main West Dip depillaring area is the most likely seat of the disaster, if it was caused by a comparatively small explosion of gas, initiating a coal-dust explosion.

The other depillaring districts are all closer to the shafts, and we have already given reasons for considering that the main explosion took place at some distance from the shafts. No. 5 West Crosscut District, in particular, seems the most unlikely of all, as it is mainly under water.

24. *Coal-dust conditions.*—Regarding coal-dust conditions in the Main West Dip District, Mr. Chatterjee, Junior Inspector of Mines, has testified that during his inspections on the previous 22nd August and 6th October he was fairly satisfied with conditions, and that he considered that the bye-laws in force at Poidih were being carried out as far as was practicable at that time. From that we may conclude that conditions were not favourable for a coal-dust explosion; but, on the other hand, it is a fact that it was the intention of the management, at the instance of the Chief Inspector of Mines, to take further steps, by stone-dusting, to improve the underground conditions and render them safer. Preparations to this end were already in hand. We infer that as regards coal-dust the district was reasonably safe, but not absolutely so. If coal-dust of the proper fineness and dryness existed in sufficient quantities, there may have been a coal-dust ignition here. If this were arrested by lack of sufficient suitable material to carry the propagation as far as the mine outlets, the absence of the major evidence of a coal-dust explosion, that is, coking of the coal-dust, and flame near or in the shafts, would be accounted for.

25. *Places where a big explosion of gas may have occurred.*—In considering the possibility of an explosion purely or at least mainly of fire-damp, we have to assume that a relatively large quantity of gas existed and was ignited, and our attention is called to the goafed and goafing areas (3) and (4) (*vide* paragraph 18 above) especially the latter. In contrast to the goaves in the areas (1) and (2) these are traversed by dykes and lie adjacent to what is described as disturbed ground, through which other dykes and a fault run. One at least of these dykes continually exuded gas in small quantities.

Mr. Thomson, while Manager in June 1935, found gas in the East Dip District, when the fan had been stopped for a few hours owing to breakdown, and ascribed its presence to exudations from three dykes on the rise of the district. We think therefore that, in order to obtain as complete a picture as we can of the possible factors, we should realise that these areas may have acted as reservoirs or receptacles for gas, and that this gas may have been released by breakdown of the strata following extraction of pillars. In No. 6 East Dip District any gas given off in ordinary quantities would have been carried into the main return airway and to the upcast shaft, but it is conceivable that larger quantities coming off at some pressure might find their way into the intakes of the main rise district, and might be carried along and ignited, under favourable conditions.

26. *Gas in the mine after the accident.*—A feature of the disaster is the large volume of inflammable unexploded gas found in the mine by the two exploring parties which descended 12 and 24 hours after the explosion. The quantity cannot be estimated, as only at the edges, at or comparatively near to, the shafts, could tests be made. But it was clear that the quantity had increased between the first and second descents, a safety lamp test made by Mr. Barraclough showing a 3 per cent. mixture in the full air current, the fan running at the time. The rise workings, at least, were full of inflammable gas, probably highly concentrated, and doubtless for some distance in the direction of the dip there would be gas, probably less concentrated. Dr. Penman has suggested that this accumulation may have represented the ordinary "make" of the mine in 12 or 24 hours with little or no ventilating current passing into the workings, *plus* what may have been ejected from the walled off goaf to the dip of the shafts subsequent to the explosion. In the absence of any exact data, however, we think that there may have been some other source of supply. If an abnormal discharge of gas caused the explosion, this discharge may have continued and may even have increased, after the explosion.

27. *Number of persons involved in the accident.*—The Chief Inspector has calculated the number of persons underground at the time of the accident as 208 including the Manager. The calculation appears to us to be correct. All these perished. In addition, as already described, one more was killed at the pit head by the explosion, so that the total casualties were 209, of whom 63 were women. All these women were below ground at the time of the accident. The number of women below ground was therefore greatly in excess of the permissible percentage, viz., 8 per cent. The attendance register, however, showed as below ground only 144 men and 6 women, excluding the Manager, whose name was not on the register. This discrepancy was due to deliberate falsification of the attendance registers by the attendance clerks under the instructions of the late Manager Mr. Dobbs. There was similar falsification of the safety lamp issue registers. For instance, the entries in the lamp issue register relating to the shift which perished show 153 lamps issued only. The colliery employees who kept up these registers have admitted that they falsified the entries. Their plea is that they had to obey the Manager's instructions.

28. *The true number of casualties how ascertained.*—The Manager obviously had to keep a true record of the persons entering the mine. But he wished to conceal from the Government Inspectors the fact that he was employing women over the permissible percentage. Under his instructions, therefore, only a few women were entered in the attendance register. The names of the others were noted in a rough scrap book. To keep up the deception, it was necessary also to falsify the lamp issue register, for the lamp issue clerk has to record against the name of each person going down mine the number of the particular safety lamp issued to him or her. In addition, therefore, to the ordinary lamp issue register, there was a separate scrap book kept, in which the names of the extra women and the numbers of the extra lamps issued were noted. From the rough scrap books kept by the attendance and lamp issue clerks, together with the regular registers, it has been possible to ascertain the names of all those persons who perished in the mine on the 18th December. The real stage of affairs as regards the numbers below ground was discovered by Mr. Cameron, Inspector of Mines, during enquiries made by him after the accident.

29. *Responsibility of the Manager and his staff for the employment of excess women.*—It is clear from the evidence that this fraudulent system, by which the presence of excess women below ground was concealed, was the invention of Mr. Dobbs, and had not been practised by previous Managers. At the same time, there are indications that it had been going on for several months. Precautions were also taken to conceal the women from the Inspector of Mines on the occasion of his visits. Mr. N. C. Chatterjee, Junior Inspector of Mines, paid visits to Poidih Colliery without previous notice on 22nd August 1936 and 6th October 1936. He has stated that in course of his inspections on those dates he examined the attendance register and checked it with the safety lamp register, and found nothing irregular. He has also deposed that he took notice of the number of women to be seen below ground and had no reason to suspect that the permissible number was being exceeded. The Chief Inspector has stated that Mr. Chatterjee is most meticulous in his work, and careful and alert in matters of detail, and that no blame attaches to him for failure to detect the fraud. We agree with this. In fact, the careful manipulation of the

registers indicates that Mr. Dobbs knew very well that the Government inspection would be thorough and took his precautions accordingly.

By falsification of the attendance register, the attendance clerks seems to have rendered themselves liable under regulation No. 149 and bye-law No. 95. The lamp issue clerks' liability under the regulations is not so clear, as they did actually record the number of the safety lamps issued to each person, and there is no prescribed form for the register to be kept by them (*vide* regulation 126 and bye-law 95).

The labour contractor, Babu Ram Kinkar Sarkar, also must have known of the excess women in the mine and practically admits so in his evidence, but he disclaims liability, and it is difficult to fix any statutory liability on him.

30. *Responsibility of the Agent for excess of women.*—We have carefully considered, in the light of the available evidence, whether any of the late Mr. Dobbs' superiors knew or should have known about the employment of excess women. It is clear that in the daily returns submitted to the Agent, which show, amongst other things, daily attendance of labour below ground, there is nothing to indicate any malpractice.

The only reports which were submitted to Mr. Hindley's office and which contained reference to labour attendance were the daily raisings returns. In columns alongside the tonnage figures the attendance of miners and "Kamins", that is, female loaders of coal, were shown separately. Messrs. Hindley and Rosser would know that the figures of coal-raisings were authentic, and having gone into the details of these reports covering seven days immediately before the accident, we consider that they would not have been justified in doubting the accuracy of the attendance figures, for the following reason:—

For the week preceding the disaster 877 tons of steam coal and slack were raised from the mine with a declared total labour attendance of 1,228 miners and Kamins so that the average yield per head per shift was about 14 cwts., *i.e.*, about the capacity of one tub. The output being confined practically to coal from pillar cutting, and mining conditions generally being favourable for output, this may be considered as a very poor average yield, and certainly did not denote that there was any under-reporting of labour attendances. Comparisons between these reports and the attendance registers would have revealed only small discrepancies, if any, and we hardly think that any officer superior to the Manager would have felt that there was any need for investigation by him. The only criticism that can justly be levied against the Agent and his Assistants in this connection is as follows:—

The reason why so many women were employed underground was in all probability the difficulty which Mr. Dobbs, like other Managers, was experiencing in finding sufficient labour to keep raisings of coal up to the required standard. The shortage of labour was abnormal not only in this, but in other collieries. The Agent and his Personal Assistant had to keep on pressing the Manager to increase his output. But they did not, as they admit, pay particular attention to the way in which the Manager was tackling the difficulty arising from the shortage of labour, nor did they question him as to whether he was tempted to employ an excess of females in order to maintain a sufficient output of coal. We consider it would have been better if the Agent and his Personal Assistant had interested themselves in this matter. Mr. Thomson, on behalf of the Agent, paid two visits to the mine between the middle of November and the date of the accident, to enquire about despatching of coal. He did not see the Manager on either occasion or go underground. It is clear that Mr. Thomson had much less opportunity than the Agent's Personal Assistant, Mr. Rosser, to discover the presence of excess women underground. Mr. Rosser visited the mine on an average once in three weeks, and went below ground with the Manager on these occasions. He did not notice any excess of women below ground, and in our opinion, he was not likely to do so unless he had paid particular attention to this matter.

31. *Precautions taken against accidents—ventilation.*—The mine was known to be a gassy one. The seam gave off inflammable gas, and it had been detected on 27th May 1936 and on several previous occasions. Safety lamps were in use, and there was regular testing for gas. The need for adequate ventilation, which is the chief safeguard against explosions, was clearly recognised, and an electrically driven fan was kept constantly running at the top of the upcast shaft during the greater part of the year.

Mr. Dobbs appears to have stopped the fan at certain times of the day from 26th to 28th November, stopped it from 20th to 28th November, run it for a short time on 2nd December and then stopped it from 3rd December to the time of the accident. The Agent and his Personal Assistant both knew the fan had been stopped, and raised no objection. The latter deposes that the ventilation was excellent with the fan stopped. Some previous Managers of this same mine had also stopped the fan in the cold weather, and found that at this season of the year the natural ventilation was quite sufficient. The evidence of the overmen is to the same effect. The Chief Inspector of Mines has gone carefully into the question of ventilation, and has come to the conclusion that air was being properly coursed round the mine. The evidence that no gas was being found in the working places, points, he says, to the same conclusion. The Chief Inspector considers that ventilation was adequate up to the relay before the accident occurred. He has given his opinion, however, that it was a mistake to stop the fan He points out (1) that the records show that the draught produced by natural ventilation was about 20,000 cubic feet per minute less than at the corresponding time in the previous month and about 10,000 cubic feet per minute less than in the month of May of the same year, (2) that the mine had grown more extensive and (3) that the fan had been kept running in the previous cold weather. He admits, however, that there is nothing, apart from the explosion, to show that the stoppage of the fan led to inadequacy of ventilation; and it is right to point out that, although the mine had extended to a small extent as compared with the previous year, the number of galleries driven in the solid were only two in number, and hence the ventilation system had become more simplified on the whole

Perhaps the fairest way to sum the matter up would be as follows:—

In the light of subsequent events, it is a pity that the fan was stopped; for to keep it running would have been an additional precaution, which just possibly might have averted the explosion by preventing accumulation of gas; but to say that the management were actually at fault in stopping the fan, would be going too far.

32. *Precautions taken against accidents—coal-dust.*—Special bye-laws prescribing precautions against explosion of coal-dust had been in force in this mine since 24th January 1936. These bye-laws are as follows:—

"1. The floor, roof and sides of airways, haulage and travelling roads of parts thereof, which are not naturally wet, shall be systematically cleared of all loose coal-dust so as to prevent, as far as practicable, dry coal-dust accumulating, and such clearings of coal-dust shall be sent out of the mine."

"2. The airways, haulage and travelling roads and working places or parts of the same which contain dry coal-dust shall be treated with water or stone dust in such manner and at such intervals as will ensure immunity from the danger of ignition by coal-dust from any cause."

"3. A special examination of the underground roadways and working faces shall be made at least once a month or, if these places are naturally wet throughout, at intervals not exceeding three months, by a competent underground official, and a report (to be recorded in a book kept at the mine for the purpose) made on their condition as to the nature of coal-dust present and the steps taken to mitigate any danger arising therefrom."

The first question for consideration is whether these bye-laws were being observed. Mr. N. C. Chatterjee, Inspector of Mines, reported on 22nd August 1936 that "water was being allowed to run down the haulage dips to keep them damp. The present Manager is not in favour of providing sprays on roadways. The level roads are periodically treated with ashes. The eastern rise section was found to be naturally wet throughout". Mr. Chatterjee was generally satisfied that the bye-laws for coal-dust were being complied with. The Chief Inspector was not satisfied, however, with the watering arrangements and directed another inspection. This was done by Mr. Chatterjee on 6th October 1936. On receiving his report, the Chief Inspector was still not fully satisfied, and informed the Inspector of Mines that adequate watering of the roadways or stone dusting should be insisted on

The Inspector wrote to the Agent, who replied that the measures taken at Poidih Colliery were of a temporary and experimental nature; that a mill was shortly to be constructed to supply stone

dust to Poidih Colliery; and that in the meantime watering of the haulage roads and regular sweeping to prevent accumulations of coal-dust was being carried on as the best means available for the present, to meet requirements.

As to the actual state of the mine just before the accident, the evidence of the overmen, of Mr. Rosser and of Mr. Hindley indicates clearly what precautions against coal-dust were being taken.

Overman Abanindra Nath Sen Gupta, for instance, deposes that since Mr. Chatterjee's last inspection both east and west main haulage roads had been kept dust-free. White-washing has been done, and arrangements made for regular watering. The water pipes were kept open continuously to keep the haulage dip roadway wet. The floor throughout the section under this overman (*i.e.*, west dip depillaring section, which was not naturally wet) was kept thoroughly wet and free from dust.

This evidence is corroborated by Mr. Rosser, who inspected the mine on behalf of the Agent a week before the disaster. He considered that the bye-laws relating to coal-dust were being satisfactorily carried out. Mr. Rosser candidly admits, however, that coal-dust may have played some part in the explosion. "I do not think it is likely", he says, "that a pure gas explosion could cause such damage".

The Agent Mr. Hindley stated as follows:—

"I have no idea how this accident could have been caused. In compliance with the bye-laws regarding coal-dust, we were watering haulage roads in the dip workings, the rise workings being naturally wet. The first steps we took were to course water down the haulage roads in the dip working to keep the floors thoroughly wet. Coolies were also employed to sweep up and take away any fine dust that we could discover. The methods of dealing with this matter were gradually being improved and it was my intention to adopt stone dusting as soon as we could get a stone mill erected at the adjoining colliery. The machinery had been constructed and erection work was expected to begin within a few days. Since I have taken over, I have speeded up the arrangements for stone dusting at all collieries at which bye-laws have been established."

Again, Mr. Hindley says:—

"When I got the letter from the Inspector of Mines, No. 2 Circle, that he did not consider the method of dealing with coal-dust adequate, I discussed the matter with Mr. Rosser and replied to the Inspector of Mines. Later, I talked it over with the Manager. We agreed that dry sweeping was no use. We decided to put stone dust down as soon as we could."

On this evidence, we think it is clear that bye-laws (1) and (3) were properly observed. As regards bye-law (2) the position was not quite so satisfactory. The watering of the dry parts of the mine was confined to the roadways only, leaving the roof and sides neither sprayed with water nor treated with stone dust as the bye-law prescribed.

We are satisfied that the Agent and the Company had intended to comply fully with the second bye-law and had made preparations for a supply of stone dust for Poidih. Unfortunately the supply was not available up to the time of the accident. It should be added that it is by no means certain that the mine would have been completely safeguarded against explosions of coal-dust even if the bye-laws had been fully complied with. The Chief Inspector of Mines has stated in his report that precautions against coal-dust are of comparatively recent origin in Indian mines, and that, while much has been done, chiefly at his instance, much remains to be done. Some groups of collieries prefer watering, and others stone dusting. There has been doubt in some minds as to whether watering is to be preferred to stone dusting, and also as to what standard of precaution could be considered adequate. The Chief Inspector is of opinion that coal-dust in old galleries may be a danger, although, up to the present, attention has been paid to the treatment of coal-dust at what has been considered the most dangerous parts of the mine, *viz.*, haulage and tramming roads, travelling roads, airways and working places.

Our conclusions as regards coal-dust precautions in this mine may be summed up as follows:—

(1) Those responsible for the management and control of the mine did make an honest effort to take adequate precautions against coal-dust but had not, up to the time of the accident, fully complied with bye-law No. 2, to the satisfaction of the Chief Inspector.

(2) In view of the probability that explosion of coal-dust played an important part in the accident, it is possible that the precautions taken were not as a matter of fact adequate.

(3) Even if the existing bye-laws had been fully complied with, the danger of coal-dust explosion would not have been entirely absent.

33. *Precautions against accidents—safety lamps.*—In Poidih Colliery, safety lamps were in use throughout the mine. The question arises whether regulations and bye-laws relating to their use were properly observed.

The Chief Inspector is of opinion that an adequate number of lamp cleaners, examiners and issue clerks was maintained in the lamp cabin, and that there was an ample number of lamps to ensure that they could be cleaned and examined between relays. In addition to the instruction of lamps on issue, a weekly inspection of, and report on, all safety lamps was made by competent persons to the Manager and Agent. We think, on the evidence, that the rules were being complied with, except for the fact that the lamp issue register was being manipulated, along with the attendance registers, in order to conceal from Government Inspectors the fact that the number of women employed underground was beyond the permissible percentage. But the lamp issue men who gave evidence before us did not seem to have sufficient sense of responsibility, and no great reliance can be placed on their testimony. It is a matter of doubt, in our opinion, whether they were actually performing their duties conscientiously, though our impression may be due to their seeking to evade responsibility, after the accident.

34. *Precautions against accidents—searches for matches, etc.*—In respect of searches, the procedure at Poidih Colliery was in advance of the regulations and bye-laws, which, although they prohibit possession of matches and smoking apparatus, etc. [regulation 127(*e*)] do not prescribe that persons entering mines should be searched for concealed matches, etc. The lamp checker, who was stationed at the entrance to the shaft, not only examine the safety lamps of those entering the mine but asked each person to make sure that he had no "biri" or matches with him, and also searched such men as he suspected. Women were not searched (evidence of Bagola Prasad Mondal corroborated by Gobinda Barui).

35. *Appointments by the Manager under regulations 127, etc.*—Under regulation 127 and bye-laws 26 and 27, lamp issue clerks have to be competent persons appointed by the Manager. Now, if we were to believe the evidence of these clerks, some of them were not duly authorised. But we are unable to accept their evidence in this respect. Mr. N. C. Chatterjee, Inspector of Mines, says that he inspected the mine on 6th October 1936 and was satisfied that those persons who should be authorised, were authorised. Harihor Roy, lamp issue clerk, told Mr. Chatterjee, that he had no authorisation letter, but in cross-examination before us, he admitted that he got an authorisation from a previous Manager, Mr. Rosser. We think it probable that some of those witnesses who have denied receipt of authorisations have deposed falsely with the idea of evading responsibility. In the absence of any complete register showing all appointments or authorisations in force at this colliery, no conclusion can be drawn from the non-discovery of a complete set of copies of authorisations. If the witnesses wished to deny their authorisations they would probably do away with some of the copies. Regulation 25, which deals with appointments by the Manager of the supervising staff of the mine, is not sufficiently stringent. Under this regulation, copies of such appointments have to be kept in the office at the mine but they need not be noted in any register. In our opinion a bound register of authorisations should be preserved.

36. *Recommendations.*—The making of recommendations is, strictly speaking, not within the scope of this enquiry, but the facts which have transpired indicate that action on the following lines may be advisable:—

(1) Improvement of the present system of mining, as far as possible, so as to prevent accumulation of gas in goaf cavities, which frequently form reservoirs for the accumulation of inflammable gas. This question, we understand, is at present under the consideration of the Coal Mining Committee.

(2) The attention of Agents and Managers of gassy mines should be drawn to the necessity of keeping mechanical ventilators working continuously in order to safeguard against any unforeseen accumulation of inflammable gas.

They should be advised to bring to the notice of the Inspector of Mines any prolonged stoppage of such ventilators.

(3) It is advisable that a regulation should be introduced to make it compulsory that persons entering a gassy mine should be searched. This regulation might be framed on the lines of section 35(2) of the English Coal Mines Act of 1911.

(4) Regulation 25 should be amended so as to provide that a bound register should be kept at every colliery, showing all appointments or authorisations of competent persons by the Manager.

(5) A regulation should be framed requiring the Manager or a competent person appointed by him to examine all the safety lamps in use at the mine at least once a week, and to record the result of such examinations in a book to be kept at the mine for the purpose.

(6) We think that electric safety lamps are less liable to misuse in the hands of irresponsible persons, and their use by all persons except the supervising and inspecting staff should be encouraged, in preference to the flame type of lamp. This is particularly advisable when extraction of pillars is being carried on. We do not advise, however, that the use of electric lamps in place of the flame type should be compulsory.

(7) Regulation 122 should be amended so as to specify more clearly the points at which the monthly measurements of air shall be made.

(8) A regulation should be issued requiring old workings in gassy mines, and particularly places in which inflammable gas may accumulate, to be examined once a week by competent person and the results recorded in a book kept at the mine for the purpose.

(9) We are impressed with the dangers arising from coal-dust in gassy mines and are of opinion that existing regulations and bye-laws regulating coal-dust should be examined with a view to their consolidation and possibly more stringent application. But in view of the limited scope of the present enquiry, and the controversial nature of the technical questions involved, we do not make any specific recommendations. We understand that the question is one of those engaging the attention of the Coal Mining Committee.

(10) We invite attention of the fact that in Poidih mine there were goaves isolated by stoppings in such a way as to make it impossible to ascertain whether inflammable gas was accumulating behind these stoppings. It is advisable that in a stopping or series of stoppings there should be arrangements whereby atmospheric conditions behind the stoppings can be readily ascertained.

37. In conclusion we wish to acknowledge our indebtedness in this enquiry to the careful and thorough report prepared by the Chief Inspector of Mines; to record our thanks to the Director and Managing Agents of the Bengal Coal Company, Limited, and to the Agent of the colliery, for the great assistance they have given to us in this enquiry; and to express our appreciation of the promptness and efficiency of the action taken after the disaster and of the courage of those who, at great personal risk, descended the mine with the exploratory parties.

O. M. Martin,

The 5th March 1937. *Officer holding the enquiry.*

L. A. Jacobs,

The 8th March 1937. *Assessor.*

B. K. Bose,

The 10th March 1937. *Assessor.*

G. S. Cameron,

The 12th March 1937. *Assessor.*

Orders by the Registrar of Joint Stock Companies, Bengal.

Calcutta, the 9th April 1937.

In the matter of the Indian Companies Act, 1913 (VII of 1913), and in the matter of Oriental Sugar Works, Ltd.

Notice is hereby given that, on the expiration of three months from date, the name of Oriental Sugar Works, Ltd., will, unless cause is shown to the contrary, be struck off the register, and the company will be dissolved.

In the matter of the Indian Companies Act, 1913 (VII of 1913), and in the matter of Basanti Transport, Ltd.

Notice is hereby given that, on the expiration of three months from date, the name of Basanti Transport, Ltd., will, unless cause is shown to the contrary, be struck off the register, and the company will be dissolved.

In the matter of the Indian Companies Act, 1913 (VII of 1913), and in the matter of Swadesh Publishing Co., Ltd.

Notice is hereby given that, on the expiration of three months from date, the name of Swadesh Publishing Co., Ltd., will, unless cause is shown to the contrary, be struck off the register, and the company will be dissolved.

N. K. MAJUMDER, *Registrar of Companies under Act VII of 1913.*

Calcutta, the 9th April 1937.

In the matter of the Indian Companies Act, 1913 (VII of 1913), and in the matter of S. J. Velly and Co., Ltd.

Notice is hereby given that the name of S. J. Velly and Co., Ltd., has this day, in pursuance of section 247 of the Act, been struck off the register and that the company is dissolved.

In the matter of the Indian Companies Act, 1913 (VII of 1913), and in the matter of Herbert Parrott and Co., Ltd.

Notice is hereby given that the name of Herbert Parrott and Co., Ltd., has this day, in pursuance of section 247 of the Act, been struck off the register and that the company is dissolved.

In the matter of the Indian Companies Act, 1913 (VII of 1913), and in the matter of Thelmer, Ltd.

Notice is hereby given that the name of Thelmer, Ltd., has this day, in pursuance of section 247 of the Act, been struck off the register and that the company is dissolved.

In the matter of the Indian Companies Act, 1913 (VII of 1913), and in the matter of B. A. S., Ltd.

Notice is hereby given that the name of B. A. S., Ltd., has this day, in pursuance of section 247 of the Act, been struck off the register and that the company is dissolved.

In the matter of the Indian Companies Act, 1913 (VII of 1913), and in the matter of Bengal Bridge and Bolt Co., Ltd.

Notice is hereby given that the name of Bengal Bridge and Bolt Co., Ltd., has this day, in pursuance of section 247 of the Act, been struck off the register and that the company is dissolved.

In the matter of the Indian Companies Act, 1913 (VII of 1913), and in the matter of G. C. Taluqdar and Co., Ltd.

Notice is hereby given that the name of G. C. Taluqdar and Co., Ltd., has this day, in pursuance of section 247 of the Act, been struck off the register and that the company is dissolved.

In the matter of the Indian Companies Act, 1913 (VII of 1913), and in the matter of Asansol Motor and Engineering Co., Ltd.

Notice is hereby given that the name of Asansol Motor and Engineering Co., Ltd., has this day, in pursuance of section 247 of the Act, been struck off the register and that the company is dissolved.

In the matter of the Indian Companies Act, 1913 (VII of 1913), and in the matter of Elliott and Co., Ltd.

Notice is hereby given that the name of Elliott and Co., Ltd., has this day, in pursuance of section 247 of the Act, been struck off the register and that the company is dissolved.

In the matter of the Indian Companies Act, 1913 (VII of 1913), and in the matter of Tiretta Bazar, Ltd.

Notice is hereby given that the name of Tiretta Bazar, Ltd., has this day, in pursuance of section 247 of the Act, been struck off the register and that the company is dissolved.

In the matter of the Indian Companies Act, 1913 (VII of 1913), and in the matter of Industrial Rupee Bank and Tea Co., Ltd.

Notice is hereby given that the name of Industrial Rupee Bank and Tea Co., Ltd., has this day, in pursuance of section 247 of the Act, been struck off the register and that the company is dissolved.

In the matter of the Indian Companies Act, 1913 (VII of 1913), and in the matter of Pearl and Fishery Co., Ltd.

Notice is hereby given that the name of Pearl and Fishery Co., Ltd., has this day, in pursuance of section 247 of the Act, been struck off the register and that the company is dissolved.

In the matter of the Indian Companies Act, 1913 (VII of 1913), and in the matter of K. V. Seyne and Co., Ltd.

Notice is hereby given that the name of K. V. Seyne and Co., Ltd., has this day, in pursuance of section 247 of the Act, been struck off the register and that the company is dissolved.

In the matter of the Indian Companies Act, 1913 (VII of 1913), and in the matter of Oriental Agency, Ltd.

Notice is hereby given that the name of Oriental Agency, Ltd., has this day, in pursuance of section 247 of the Act, been struck off the register and that the company is dissolved.

In the matter of the Indian Companies Act, 1913 (VII of 1913), and in the matter of Wallace Stuart and Co., Ltd.

Notice is hereby given that the name of Wallace Stuart and Co., Ltd., has this day, in pursuance of section 247 of the Act, been struck off the register and that the company is dissolved.

In the matter of the Indian Companies Act, 1913 (VII of 1913), and in the matter of Indian Brick and Tiles Manufacturing Co., Ltd.

Notice is hereby given that the name of Indian Brick and Tiles Manufacturing Co., Ltd., has this day, in pursuance of section 247 of the Act, been struck off the register and that the company is dissolved.

In the matter of the Indian Companies Act, 1913 (VII of 1913), and in the matter of General Gulvanizers, Ltd.

Notice is hereby given that the name of General Gulvanizers, Ltd., has this day, in pursuance of section 247 of the Act, been struck off the register and that the company is dissolved.

N. K. MAJUMDER,

Registrar, Joint Stock Companies.

DEPARTMENT OF COMMUNICATIONS AND WORKS (COMMUNICATIONS AND BUILDINGS).

Establishment.

NOTIFICATION.

Minister-in-charge: The Hon'ble Maharaja Srischandra Nandy, of Kasimbazar.

No. 22.—15th April 1937. — Babu Paresh Nath Sen, Electrical Assistant Engineer, Western (Electrical) Division, Electrical Circle, is allowed, under rule 81 (*b*) (*ii*) of the Fundamental Rules, leave on average pay for four months, with effect from the date of his relief.

S. K. HALDAR,

Secy. to the Govt. of Bengal.

DEPARTMENT OF AGRICULTURE AND INDUSTRIES.

Industries.

NOTIFICATION.

No. 2405Ind.—9th April 1937.—In exercise of the power conferred by rule 41 of the Civil Services (Classification, Control and Appeal) Rules, the Government of Bengal are pleased to make the following rule regulating the pay of the post of Director of Industries included in the Bengal General Service while held by Mr. S. C. Mitter. It shall be deemed to have come into force with effect from the 2nd February 1937:—

Rule.

The pay of the said post, while held by Mr. S. C. Mitter, shall be Rs. 1,500—50/2—1,800. In addition Mr. Mitter will draw a special pay of Rs. 200 per mensem for so long as he is in charge of the Detenu Training Scheme.

Agriculture.

NOTIFICATIONS.

No. 2370Agri. — 7th April 1937. — Mr. Dwijadas Datta, Second Economic Botanist, Bengal, is allowed leave, on medical certificate, for six months, viz., leave on average pay for five months and one day, i.e., up to 1st July 1937, under the proviso to rule 81 (*b*) (*ii*) of the Fundamental Rules, and leave on half average pay for the remaining period, under rule 81 (*d*) of those Rules, in extension of the leave already granted to him.

No. 2371Agri. — 7th April 1937. — Mr. S. G. Sharngapani, officiating Deputy Director of Agriculture, Northern Circle, is appointed to act as Second Economic Botanist, Bengal, during the absence, on leave, of Mr. Dwijadas Datta, or until further orders.

No. 2372Agri. — 7th April 1937. — Mr. H. R. Edmunds, Superintendent of Agriculture, Kalimpong, is appointed to act as Deputy Director of Agriculture, Northern Circle, in addition to his own duties, *vice* Mr. S. G. Sharngapani, or until further orders.

No. 2589Agri. — 15th April 1937. — Mr. K. C. Guha, District Agricultural Officer, is appointed to act as Live Stock Expert to the Government of Bengal in the Bengal Lower Agricultural Service, *vice* Mr. F. J. Gossip, on leave, or until further orders.

Veterinary.

NOTIFICATIONS.

No. 2459Vety.—12th April 1937.—In exercise of the power conferred by sub-section (*1*) of section 4 of the Glanders and Farcy Act, 1899 (XIII of 1899), the Governor is pleased to make the following amendments in the designation of officers appointed to be Inspectors under that Act in notification No. 7235-Agri., dated the 2nd September 1916, and mentioned in the table attached thereto:—

(1) *For* "Stationary and Itinerating Veterinary Assistants" against item 2 in column 1 of the table *substitute* "Stationary and Itinerating Veterinary Assistant Surgeons."

(2) Against item 5 in column 1 of the table *substitute* "Director" *for* "Superintendent," "Vice-Principal" *for* "Assistant Principal," "Assistant Directors" *for* "Deputy Superintendents" and "Veterinary Assistant Surgeons" *for* "Veterinary Assistants."

No. 2463Vety.—12th April 1937.—In exercise of the power conferred by sub-section (*1*) of section 7 of the Glanders and Farcy Act, 1899 (XIII of 1899), the Governor is pleased to make the following amendments in the designation of officers appointed in notification No. 7236Agri., dated the 2nd September 1916, to be Veterinary Practitioners to act under the said section 7 of the Act in any district in Bengal so far as the diseases of glanders, farcy, surra and lymphangitis epizootica are concerned:—

(1) *Substitute* the words "Vice-Principal" *for* "Assistant Principal" in item (2).

(2) *Substitute* the word "Director" *for* "Superintendent" in item (3).

(3) *Substitute* the words "Assistant Directors" *for* the words "Deputy Superintendents" in item (4).

H. S. E. STEVENS,
Secy. to the Govt. of Bengal.

REVENUE DEPARTMENT.

Land Revenue.

NOTIFICATIONS.

Hooghly.—No. 8737L.R.—10th April 1937.—In exercise of the power conferred by section 103B, sub-section (*3*) of the Bengal Tenancy Act, 1885 (Act VIII of 1885) and in continuation of the notification No. 10147L.R., dated the 13th September 1934, published at pages 1354 to 1356, Part I of the *Calcutta Gazette*, dated the 20th September 1934, the Governor is pleased to declare that a record-of-rights has been finally published under

section 103A, sub-section (2) of the said Act, in respect of the remaining villages in police-station Tarkeswar in the district of Hooghly.

Hooghly.—No. 8738L.R.—10th April 1937.—In exercise of the power conferred by section 103B, sub-section (3) of the Bengal Tenancy Act, 1885 (Act VIII of 1885), and in continuation of notification No. 7352L.R., dated the 8th May 1936, published at page 1111, Part I of the *Calcutta Gazette*, dated the 14th May 1936, the Governor is pleased to declare that a record-of-rights has been finally published under section 103A, sub-section (2) of the said Act, in respect of the remaining villages in police-stations Khanakul and Arambag in the district of Hooghly.

Hooghly.—No. 8739L.R.—10th April 1937.—In exercise of the power conferred by section 103B, sub-section (3) of the Bengal Tenancy Act, 1885 (Act VIII of 1885), and in continuation of notification No. 3454L.R., dated the 28th February 1936, published at pages 481-82, Part I of the *Calcutta Gazette*, dated the 5th March 1936, the Governor is pleased to declare that a record-of-rights has been finally published under section 103A, sub-section (2) of the said Act, in respect of the remaining villages in police-station Chinsura in the district of Hooghly.

Hooghly.—No. 8740L.R.—10th April 1937.—In exercise of the power conferred by section 103B, sub-section (3) of the Bengal Tenancy Act, 1885 (Act VIII of 1885), the Governor is pleased to declare that a record-of-rights has been finally published under section 103A, sub-section (2) of the said Act, in respect of every village included in the police-stations of Serampore and Bhadreswar in the district of Hooghly.

Howrah.—No. 8829L.R.—12th April 1937.—Under the provision of section 3 (14) of the Bengal Tenancy Act, 1885 (Act VIII of 1885), the undermentioned Kanungos are authorised to discharge, in the district of Howrah, the functions of a Revenue Officer, under Chapter X of the Act, so far as they relate to surveys and the preparation of record-of-rights:—

Maulvi Anisur Rahaman.

Babu Krishna Chandra Ray.

Bakarganj. No. 8861L.R.—12th April 1937.—Babu Satya Charan Haldar, Deputy Magistrate and Deputy Collector, is appointed to be the Khas Mahal Officer of Bakarganj, with effect from the 21st February 1937.

No. 8994L.R.—15th April 1937.—Babu Anukul Chandra Sarkar, Sub-Deputy Collector, is allowed leave on average pay for a further period of four days, under rule 81 (b) (ii) of the Fundamental Rules, in extension of the leave granted to him in this department notification No. 3053L.R., dated the 11th February 1937.

No. 8999L.R.—15th April 1937.—In exercise of the power conferred by section 7 of the Government Management of Private Estates Act, 1892 (Act X of 1892), the Governor is pleased to direct that the following rates be levied for the year commencing from the 1st April 1937 and ending on the 31st March 1938:—

1. *Levy of general rate.*—The rates leviable under section 3 of the Act on all private estates as defined in clause (3) of section 2, in order to cover, as nearly as possible, the cost of all Government establishment employed and contingent expenditure incurred by Government for the supervision and management of such estates, shall be calculated on the gross income of the several estates at the scales specified below:—

Four per cent. for the Bhowal estate.

One and one-quarter per cent. for the Kasimbazar and Murshidabad Nawab estates.

Two and three-quarters per cent. for all other estates.

2. *Levy of general rate for a portion of the year.*—If any estate is under Government management for a portion of the year only, the rate is to be levied only upon the gross income received during the period of such management.

3. *Levy of audit rate.*—Under section 4 the rate leviable on all private estates having a current rent and cess demand of Rs. 50,000 and upwards, which are subjected to audit by the Examiner of Local Accounts, shall be as follows:—

Six annas per hundred rupees on the Mahisadal Estate and Murshidabad Nawab estate.

Seven annas and a half per hundred rupees on other estates excluding the Kasimbazar and Bhowal estates but including Behari Lal Mukherji's Trust estate in the district of Hooghly, though the rent and cess demands of that estate may fall below Rs. 50,000.

4. *Legal Remembrancer's fees.*—Under section 4 the payment of fees shall be obligatory on all estates for legal business done for them by the office of the Superintendent and

Remembrancer of Legal Affairs. The scales of fee are as follows:—

(1) Examining plaints and written statements*—1 of 2 gold mohurs.
(2) Settling grounds of appeals and petitions (District Courts)*—1 of 2 gold mohurs.
(3) Compromise*—1 or 2 gold mohurs.
(4) Consultation—2 or 3 gold mohurs.
(5) Opinion—2 to 5 gold mohurs.

Bakarganj. — No. 9005L.R. — 15th April 1937.—In exercise of the power conferred by sub-section (*3*) of section 158A of the Bengal Tenancy Act, 1885 (VIII of 1885), the Governor is pleased to appoint the Certificate Officer of Bhola *ex-officio* to perform the functions of a Certificate Officer under the Bengal Public Demands Recovery Act, 1913 (Bengal Act III of 1913), for the purpose of the said section in respect of recovery of arrears of rent (including cesses) due to the estate No. 5285 of Babu Saradindu Mukherjee situated in the district of Bakarganj.

Murshidabad.—No. 9008L.R. — 15th April 1937.—In exercise of the power conferred by sub-section (*3*) of section 158A of the Bengal Tenancy Act, 1885 (VIII of 1885), the Governor is pleased to appoint the Certificate Officer, Berhampore, *ex-officio*, to perform the functions of a Certificate Officer under the Bengal Public Demands Recovery Act, 1913 (Bengal Act III of 1913), for the purpose of the said section in respect of recovery of arrears of rent (including cesses) due to the estate of the Maharajadhiraja Bahadur of Burdwan, in the district of Murshidabad.

Hooghly.—No. 9011L.R.—15th April 1937. —In exercise of the power conferred by sub-section (*3*) of section 158A of the Bengal Tenancy Act, 1885 (VIII of 1885), the Governor is pleased to appoint the Certificate Officers at Hooghly and Arambagh *ex-officio* to perform the functions of Certificate Officer under the Bengal Public Demands Recovery Act, 1913 (Bengal Act III of 1913), for the purposes of the said section in respect of the recovery of arrears of rent (including cesses) due to the estate of the Maharajadhiraja Bahadur of Burdwan, situated in the district of Hooghly.

Burdwan.—No. 9014L.R.—15th April 1937. —In exercise of the power conferred by sub-section (*3*) of section 158A of the Bengal Tenancy Act, 1885 (VIII of 1885), the Governor is pleased to appoint the Certificate Officer of Burdwan, Sadar, *ex-officio* to perform the functions of a Certificate Officer under the Bengal Public Demands Recovery Act, 1913 (Bengal Act III of 1913), for the purpose of the said section in respect of the recovery of arrears of rent (including cesses) due to the estate of the Maharajadhiraja Bahadur of Burdwan, situated in the district of Burdwan.

*In analogous cases one-half of the fee assessed will be charged for each case after the first, subject to a minimum fee of 2 gold mohurs for all the analogous cases taken together.

Howrah.—No. 9086L.R.—16th April 1937. —Under the provisions of section 3 (*14*) of the Bengal Tenancy Act, 1885 (VIII of 1885), the undermentioned kanungos are authorised to discharge, in the district of Howrah, the functions of a Revenue Officer, under Chapter X of the Act, so far as they relate to surveys and preparation of record-of-rights:—

Babu Matilal Maitra.

Babu Bishnupada Chatarji.

Land Acquisition.

NOTIFICATIONS.

Calcutta.—No. 8629L.A. — 7th April 1937. —Whereas it appears to the Governor that land is likely to be required to be taken by Government at the expense of the Corporation of Calcutta for a public purpose, viz., for a children's park at Sashi Bhusan Chatterjee Lane in ward No. 30 of the Calcutta Municipality in the city of Calcutta, it is hereby notified that for the above purpose a piece of land comprising premises Nos. 11/2 and 13/1, Sashi Bhusan Chatterjee Lane, and measuring, more or less, 0·2644 of an acre, bounded on the—

North—By premises Nos. 10, 11, 12 and 13, Raja Sew Bux Bagla Lane,

West—By premises Nos. 10 and 12, Sashi Bhusan Chatterjee Lane,

South—By common passage to premises Nos. 9 and 10, Sashi Bhusan Chatterjee Lane, and 4, Banamali Chatterjee Street,

East—By Sashi Bhusan Chatterjee Lane,

is likely to be required within the aforesaid ward No. 30 of the Calcutta Municipality in the city of Calcutta.

This notification is made, under the provisions of section 4 of Act I of 1894, to all whom it may concern.

A plan of the land may be inspected in the office of the Second Land Acquisition Collector at No. 5, Bankshall Street, Calcutta.

In exercise of the powers conferred by the aforesaid section, the Governor is pleased to authorise the officers for the time being engaged in the undertaking, with their servants and workmen, to enter upon and survey the land and do all other acts required or permitted by that section.

Any person interested in the above land, who has any objection to the acquisition thereof, may, within thirty days after the date on which public notice of the substance of this notification is given in the locality, file an objection in writing before the Second Land Acquisition Collector, Calcutta.

Chittagong. — No. 8632L.A. — 7th April 1937.—Whereas it appears to the Governor that land is likely to be required to be taken by Government at the expense of the Chandra Nagar Tea Company, Ltd., for extension of Company's factories and construction of their

cooke sheds, etc., in the village of Jujkhola, police-station Fatickchery, zilla Chittagong, it is hereby notified that for the above purpose pieces of land comprising the revisional survey plots Nos. 6667 (part), 6668, 6669, 6670, 6671, 6672, 6673, 6674, 6675, 6676, 6678, 6679, 6680, 6681, 6682, 6683, 6684, 6685, 6686, 6687, 6688, 6689, 6690, 6691, 6692, 6693, 6694, 6695, 6696, 6697, 6698, 6699, 6700, 6701, 6702, 6703, 6704, 6705, 6706, 6707, 6708, 6709, 6786, 6787, 6788, 6789, 6790, 6791, 6792, 6795, 6796, 6797, 6798, 6801, 6802, 6803, 6804, 6805, 6806, 6813, 6814 and 6815 and measuring, more or less, 15·10 acres, are likely to be required within the aforesaid village of Jujkhola.

This notification is made, under the provisions of section 4 of Act I of 1894, to all whom it may concern.

A plan of the land may be inspected in the office of the Collector of Chittagong.

In exercise of the powers conferred by the aforesaid section, the Governor is pleased to authorise the officers for the time being engaged in the undertaking, with their servants and workmen, to enter upon and survey the land and do all other acts required or permitted by that section.

Any person interested in the above land, who has any objection to the acquisition thereof, may, within thirty days after the date on which public notice of the substance of this notification is given in the locality, file an objection in writing before the Collector of Chittagong.

Murshidabad.—No. 8635L.A. — 7th April 1937.—Whereas it appears to the Governor that land is likely to be required to be taken by Government at the expense of the district board, Murshidabad, for a public purpose, viz., for constructing the north approach of Godaipur ferry ghat in the villages of Khidirpur and Godaipur, jurisdiction list Nos. 2 and 3, respectively, thana Raghunathganj, pargana Gankar, zilla Murshidabad, it is hereby notified that for the above purpose a piece of land measuring, more or less, 4·2198 acres, comprising parts of cadastral plots Nos. 69, 68, 62, 61, 60, 63, 55, 54, 53, 52, 51, 50 and 105 of mauza Khidirpur and parts of settlement plots Nos. 616, 615, 605, 625, 593, 595, 594, 592, 589, 590, 580, 663, 662, 990 and entire plot No. 581 of mauza Godaipur, is likely to be required within the aforesaid villages of Khidirpur and Godaipur.

This notification is made, under the provisions of section 4 of Act I of 1894, to all whom it may concern.

A plan of the land may be inspected in the office of the Subdivisional Officer, Jangipur.

In exercise of the powers conferred by the aforesaid section, the Governor is pleased to authorise the officers for the time being engaged in the undertaking, with their servants and workmen, to enter upon and survey the land and do all other acts required or permitted by that section.

Any person interested in the above land, who has any objection to the acquisition thereof, may, within thirty days after the date on which public notice of the substance of this notification is given in the locality, file an objection in writing before the Collector of Murshidabad.

Murshidabad.—No. 8638L.A. — 7th April 1937.—The Governor is pleased to cancel the notification No. 10798L.A., dated the 12th August 1935, under section 4 of the Land Acquisition Act, I of 1894, published at page 1580, Part I of the *Calcutta Gazette* of the 15th idem, in respect of the proposed acquisition of 4·677 acres of land required by the district board of Murshidabad for constructing the north approach of Godaipur ferry-ghat in the villages of Khidirpur and Godaipur, jurisdiction list Nos. 2 and 3, respectively, thana Raghunathganj, pargana Gankar, zilla Murshidabad.

Calcutta.—No. 8641L.A.—7th April 1937.—The Governor is pleased to cancel the notification No. 13274L.A., dated the 6th November 1931, under section 4 of the Land Acquisition Act, I of 1894, published at page 1444, Part I of the *Calcutta Gazette* of the 19th idem, in respect of the proposed acquisition of 0·0263 of an acre of land required by the Corporation of Calcutta for widening Scott Lane at premises No. 13, Scott Lane, and 2, Williams Lane, in Ward No. IX of the Calcutta Municipality in the city of Calcutta.

Bogra.—No. 8644L.A. — 7th April 1937.—Whereas it appears to the Governor that land is likely to be required to be taken by Government at the expense of the Amdal union board for a public purpose, viz., for a union board road from Madhainagar to Mirgram in the villages of Tegharidandapani and Mirgram, jurisdiction list Nos. 146 and 147, respectively, thana Jaipurhat, pargana Poladashi, district Bogra, it is hereby notified that for the above purpose a piece of land comprising parts of cadastral plots Nos. 306, 304, 305, 269, 271, 270, 332, 333, 272, 623, 622, 599, 602, 544, 601, 603, 525, 542, 543, 626, 627, 624, 600, 526 and 541, and measuring, more or less, 1·23 acres, is likely to be required within the aforesaid villages of Tegharidandapani and Mirgram.

This notification is made, under the provisions of section 4 of Act I of 1894, to all whom it may concern.

A plan of the land may be inspected in the office of the Collector of Bogra.

In exercise of the powers conferred by the aforesaid section, the Governor is pleased to authorise the officers for the time being engaged in the undertaking, with their servants and workmen, to enter upon and survey the land and do all other acts required or permitted by that section.

Any person interested in the above land, who has any objection to the acquisition thereof, may, within thirty days after the date on which public notice of the substance of this notification is given in the locality, file an objection in writing before the Collector of Bogra.

Malda.—No. 8647L.A. — 7th April 1937.—Whereas it appears to the Governor that land is likely to be required to be taken by Government at the expense of the district board,

Malda, for a public purpose, viz., for improvement of the Ghorapir-Chandipur road in the village of Uttar Ramchandrapur, jurisdiction list No. 71, thana English Bazar, pargana Bhatia Gopalpur, district Malda, it is hereby notified that for the above purpose a piece of land comprising parts of cadastral plots Nos. 253, 251, 247, 243, 242, 241, 239, 237, 236, 586, 587, 589, 590, 625, 626, 630, 631, 688, 689, 690, 694, 745, 744, 742, 737, 741, 740, 739, 774, 771, 770 and 769 and measuring, more or less, 1·470 acres, is likely to be required within the aforesaid village of Uttar Ramchandrapur.

This notification is made, under the provisions of section 4 of Act I of 1894, to all whom it may concern.

A plan of the land may be inspected in the office of the Collector of Malda.

In exercise of the powers conferred by the aforesaid section, the Governor is pleased to authorise the officers for the time being engaged in the undertaking, with their servants and workmen, to enter upon and survey the land and do all other acts required or permitted by that section.

Any person interested in the above land, who has any objection to the application thereof, may, within thirty days after the date on which public notice of the substance of this notification is given in the locality, file an objection in writing before the Collector of Malda.

Calcutta.—No. 8650L.A.—7th April 1937.—The Governor is pleased to cancel the notification No. 11357L.A., dated the 10th September 1931, under section 4 of the Land Acquisition Act, published at page 1112, Part I of the *Calcutta Gazette* of the 17th idem, in respect of the proposed acquisition of 0·0017 of an acre of land required by the Corporation of Calcutta for splaying off the corner opposite to No. 3, Royd Lane, in Ward No. XV of the Calcutta Municipality, in the city of Calcutta.

Bakarganj. — No. 8744L.A. — 10th April 1937.—Whereas it appears to the Governor that land is likely to be required to be taken by Government at the expense of the district board, Bakarganj, for a public purpose, viz., for a road from Shohagdal-Muninag Road to south Shohagdal reserved tank, in the village of Shohagdal, pargana Selimabad, district Bakarganj, it is hereby notified that for the above purpose a piece of land comprising portions of cadastral survey plot Nos. 2239 and 2240, and measuring more or less, 0·08 of an acre, is likely to be required within the aforesaid village of Shohagdal.

This notification is made, under the provisions of section 4 of Act I of 1894, to all whom it may concern.

A plan of the land may be inspected in the office of the Collector of Bakarganj.

In exercise of the powers conferred by the aforesaid section, the Governor is pleased to authorise the officers for the time being engaged in the undertaking, with their servants and workmen, to enter upon and survey the land and do all other acts required or permitted by that section.

Any person interested in the above land, who has any objection to the acquisition thereof, may, within thirty days after the date on which public notice of the substance of this notification is given in the locality, file an objection in writing before the Collector of Bakarganj.

Nadia.—No. 8831L.A.—12th April 1937.—Whereas it appears to the Governor that land is likely to be required to be taken by Government at the expense of the Meherpur Municipality for a public purpose, viz., for the construction of a maternity ward of the charitable dispensary at Meherpur, in the village of Meherpur, jurisdiction list No. 59, thana Meherpur, pargana Rajpur, district Nadia, it is hereby notified that for the above purpose, a piece of land comprising parts of cadastral plot No. 1810, and measuring, more or less, 0·08 of an acre, is likely to be required within the aforesaid village of Meherpur.

This notification is made, under the provisions of section 4 of Act I of 1894, to all whom it may concern.

A plan of the land may be inspected in the office of the Land Acquisition Collector of Meherpur.

In exercise of the powers conferred by the aforesaid section, the Governor is pleased to authorise the officers for the time being engaged in the undertaking, with their servants and workmen, to enter upon and survey the land and do all other acts required or permitted by that section.

Any person interested in the above land, who has any objection to the acquisition thereof, may, within thirty days after the date on which public notice of the substance of this notification is given in the locality, file an objection in writing before the Land Acquisition Deputy Collector of Meherpur.

Burdwan.—No. 8983L.A.—15th April 1937.—Whereas it appears to the Governor that land is likely to be required to be taken by Government at the public expense for a public purpose, viz., for spur bund in connection with flexible brick mattress work in the 20th and 21st miles of Damodar Left Embankment, in the village of Mirchhoba, jurisdiction list No. 33, thana Burdwan, pargana Burdwan, district Burdwan, it is hereby notified that for the above purpose a piece of land comprising parts of cadastral survey plot Nos. 180 and 188 and measuring, more or less, 0·63 of an acre, is likely to be required within the aforesaid village of Mirchhoba.

This notification is made, under the provisions of section 4 of Act I of 1894, to all whom it may concern.

A plan of the land may be inspected in the office of the Special Land Acquisition Officer, Burdwan, as well as in that of the Executive Engineer, Damodar Division, Calcutta.

In exercise of the powers conferred by the aforesaid section, the Governor is pleased to authorise the officers for the time being engaged in the undertaking, with their servants and workmen, to enter upon and survey the land and do all other acts required or permitted by that section.

Any person interested in the above land, who has any objection to the acquisition thereof, may, within thirty days after the date on which public notice of the substance of this notification is given in the locality, file an objection in writing before the Collector of Burdwan.

Tippera.—No. 8986L.A.—15th April 1937. —Whereas it appears to the Governor that land is likely to be required to be taken by Government at the expense of the Comilla Municipality for a public purpose, viz., for widening the Hymnes Road in front of the Raj Rajeswari Kalibari, in the village of Manoharpur, part 2, Comilla town, pargana Meherkul, zilla Tippera, it is hereby notified that for the above purpose a piece of land measuring, more or less, 0·01 of an acre and bounded on the—

North—By the Hymnes Road,

South—By part of Roshnabad Settlement plot Nos. 270 and 271,

East—By part of Roshnabad Settlement plot No. 271, and

West—By part of Roshnabad Settlement plot No. 270,

is likely to be required within the aforesaid village of Manoharpur, part 2, Comilla town.

This notification is made, under the provisions of section 4 of Act I of 1894, to all whom it may concern.

A plan of the land may be inspected in the office of the Collector of Tippera.

In exercise of the powers conferred by the aforesaid section, the Governor is pleased to authorise the officers for the time being engaged in the undertaking, with their seravnts and workmen, to enter upon and survey the land and do all other acts required or permitted by that section.

Any person interested in the above land, who has any objection to the acquisition thereof, may, within thirty days after the date on which public notice of the substance of this notification is given in the locality, file an objection in writing before the Subdivisional Officer, Sadar, South, Comilla.

Jessore.—No. 8992L.A.—15th April 1937. —Maulvi Wali-ul-Islam, Sadar Subdivisional Officer, district Jessore, is vested with the powers of a Collector under the Land Acquisition Act I of 1894, in the Sadar, Bongaon and Jhenidah subdivisions of the district.

Hooghly.—No. 9002L.A.—15th April 1937. —The Governor is pleased to cancel the notification No. 6360L.A., dated the 5th June 1934, under section 4 of the Land Acquisition Act I of 1894 published at page 843, Part I of the *Calcutta Gazette* of the 14th idem, in respect of the proposed acquisition of 0·132 of an acre of land required by the Serampore Municipality for the construction of a rest house at the junction of the Grand Trunk Road and Jagonath Ghat Lane in the village of Mahesh, thana Serampore, jurisdiction list No. 19, pargana Boro, district Hooghly.

Murshidabad.—No. 9223L.A. — 17th April 1937.—Whereas it appears to the Governor that land is likely to be required to be taken by Government partly at the public expense and partly at the expense of the London Missionary Society, Berhampore (Bengal), for a public purpose, viz., for enlarging the play ground of the London Missionary Society's Boys' Primary School at Nimtola, in the village of Gorabazar, jurisdiction list No. 90, thana Berhampore town, pargana Kulberia, zilla Murshidabad, it is hereby notified that for the above purpose a piece of land comprising cadastral plot No. 1384 of mauza Gorabazar, and measuring, more or less, 0·1 of an acre, is likely to be required within the aforesaid village of Gorabazar.

This notification is made, under the provisions of section 4 of Act I of 1894, to all whom it may concern.

A plan of the land may be inspected in the office of the Collector of Murshidabad.

In exercise of the powers conferred by the aforesaid section, the Governor is pleased to authorise the officers for the time being engaged in the undertaking, with their servants and workmen, to enter upon and survey the land and do all other acts required or permitted by that section.

Any person interested in the above land, who has any objection to the acquisition thereof, may, within thirty days after the date on which public notice of the substance of this notification is given in the locality, file an objection in writing before the Collector of Murshidabad.

24-Parganas.—No. 9226L.A. — 17th April 1937. — Whereas it appears to the Governor that land is likely to be required to be taken by Government at the expense of the Panihaty Municipality for a public purpose, viz., for the construction of Municipal Office building, in the village of Panihati, jurisdiction list No. 10, thana Khardaha, pargana Calcutta, district 24-Parganas, it is hereby notified that for the above purpose a piece of land comprising cadastral plots Nos. 1108, 1109 and portion of cadastral plot No. 1105 and measuring, more or less, 1·2686 acres, is likely to be required within the aforesaid village of Panihati.

This notification is made, under the provisions of section 4 of Act I of 1894, to all whom it may concern.

A plan of the land may be inspected in the office of the Chairman, Panihati municipality.

In exercise of the powers conferred by the aforesaid section, the Governor is pleased to authorise the officers for the time being engaged in the undertaking, with their servants and workmen, to enter upon and survey the land and do all other acts required or permitted by that section.

Any person interested in the above land, who has any objection to the acquisition thereof, may, within thirty days after the date on which public notice of the substance of this notification is given in the locality, file an objection in writing before the Collector of the 24-Parganas

Hooghly.—No. 9229L.A.—17th April 1937. —Whereas it appears to the Governor that land is likely to be required to be taken by Government at the expense of the Hooghly-Chinsurah Municipality for a public purpose, viz., for municipal cooly and cattle shed at Tolaphatak in Ward No. V of the said municipality, in the village of Chinsurah, jurisdiction list No. 20, thana Chinsurah, pargana Arsa, district Hooghly, it is hereby notified that for the above purpose a piece of land comprising cadastral plots Nos. 8017 and 8024, and measuring, more or less, 0·498 of an acre, is likely to be required within the aforesaid village of Chinsurah.

This notification is made, under the provisions of section 4 of Act I of 1894, to all whom it may concern.

A plan of the land may be inspected in the office of the Land Acquisition Officer of Hooghly (Sadar).

In exercise of the powers conferred by the aforesaid section, the Governor is pleased to authorise the officers for the time being engaged in the undertaking, with their servants and workmen, to enter upon and survey the land and do all other acts required or permitted by that section.

Any person interested in the above land, who has any objection to the acquisition thereof, may, within thirty days after the date on which public notice of the substance of this notification is given in the locality, file an objection in writing before the Land Acquisition Officer of Hooghly (Sadar).

Chittagong. — No. 9241L.A. — 19th April 1937.—Whereas it appears to the Governor that land is likely to be required to be taken by Government partly at the public expense and partly at the expense of the school authorities for a public purpose, viz., for the playground of the Satkania High English School, in the village of Paschim-Dhemsha, police-station Satkania, zilla Chittagong, it is hereby notified that for the above purpose a piece of land comprising the revisional survey plots Nos. 4019, 4032 and parts of revisional survey plots Nos. 3999, 4000, 4033, 4034 and 3998, and measuring, more or less, 2·38 acres, is likely to be required within the aforesaid village of Paschim-Dhemsha.

This notification is made, under the provisions of section 4 of Act I of 1894, to all whom it may concern.

A plan of the land may be inspected in the office of the Collector of Chittagong.

In exercise of the powers conferred by the aforesaid section, the Governor is pleased to authorise the officers for the time being engaged in the undertaking, with their servants and workmen, to enter upon and survey the land and do all other acts required or permitted by that section.

In exercise of the powers conferred by section 17(*4*) of the Land Acquisition Act (Act I of 1894), as amended by Act XXXVIII of 1923, the Governor is pleased to direct that the provisions of section 5A of the act shall not apply in this case.

Burdwan. No. 9247L.A.—19th April 1937. Whereas it appears to the Governor that land is likely to be required to be taken by Government at the public expense for a public purpose, viz., for an approach road of the bridge and regulator at mile 6, chainage 43 and 95 feet of distributary No. 11, branch canal, Damodar Canal Project, in the village of Balsidanga, jurisdiction list No. 60, thana Bhatar, pargana Mazafarsahi, district Burdwan, it is hereby notified that for the above purpose a piece of land comprising parts of cadastral survey plot No. 239, and measuring, more or less, 0·025 of an acre, is likely to be required within the aforesaid village of Balsidanga.

This notification is made, under the provisions of section 4 of Act I of 1894, to all whom it may concern.

A plan of the land may be inspected in the office of the Special Land Acquisition Officer, Burdwan, as well as in that of the Executive Engineer, Damodar Canal Division, Burdwan.

In exercise of the powers conferred by the aforesaid section, the Governor is pleased to authorise the officers for the time being engaged in the undertaking, with their servants and workmen, to enter upon and survey the land and do all other acts required or permitted by that section.

In exercise of the powers conferred by section 17(*4*) of the Land Acquisition Act, I of 1894, as amended by Act XXXVIII of 1923, the Governor is pleased to direct that the provisions of section 5A of the Act shall not apply in this case.

ERRATUM.

Midnapore.—No. 8657L.A.—7th April 1937. —In line 11 of notification No. 6347L.A., dated the 18th April 1936, under section 4 of the Land Acquisition Act, published at page 983, Part I of the *Calcutta Gazette* of the 23rd idem, in respect of the proposed acquisition of 0·22 of an acre of land required for the Jhargram station of the Bengal-Nagpur Railway, in the village of Jangal Khas, district Midnapore, for the expression "part of cadastral plot No. 45" *read* "parts of cadastral plots Nos. 2/31 and 31/45".

DECLARATIONS.

Dacca.—No. 8755L.A.—10th April 1937.—Whereas it appears to the Governor that land is required to be taken by Government at the expense of the Rarikhal-Maijpara union board, for a public purpose, viz., for the construction of a new road connecting the local board road at Rarikhal with the Harendra Lal road at Bhagyakul, in the villages of Rarikhal and Mandra, parganas Bikrampur, Khizirpur and Tappa-Ramkrishnapur, zilla Dacca, it is hereby declared that for the above purpose two pieces of land in Block Nos. I and II, altogether measuring, more or less, 2·053 acres, and comprising parts of cadastral survey plots Nos. 272, 275, 276, 277, 278, 279, 285, 287, 303, 3295, 328, 329, 331, 332, 336, 355 and 356 of mauza Rarikhal and parts of cadastral survey plots Nos. 12, 13, 22, 23, 32, 33, 36, 37 and 39 of mauza Mandra, are required with the aforesaid villages of Rarikhal and Mandra.

This declaration is made, under the provisions of section 6 of Act I of 1894, to all whom it may concern.

A plan of the land may be inspected in the office of the Subdivisional Officer of Munshiganj.

Jalpaiguri. — No. 8989L.A. — 15th April 1937.—Whereas it appears to the Governor that land is required to be taken by Government at the expense of the District Board, Jalpaiguri, for a public purpose, viz., for a road in the Char of the Teesta river in the village of Kharia, pargana Baikunthapur, zilla Jalpaiguri, it is hereby declared that for the above purpose a piece of land comprising parts of cadastral plots Nos. 1, 13 and 14 of sheet No. 21 and measuring, more or less, 1·48 acres of land is required within the aforesaid village of Kharia.

This declaration is made, under the provision of section 6 of Act I of 1894, to all whom it may concern. A plan of the land may be inspected in the office of the Deputy Commissioner, Jalpaiguri

Jalpaiguri.—No. 9232L.A.—17th April 1937.—Whereas it appears to the Governor that land is required to be taken by Government partly at the public expense and partly at the expense of the Managing Committee, Boda High English School, for a public purpose, viz., for a game-field for the Boda High English School in the village of Baguladangi, pargana Boda, zilla Jalpaiguri, it is hereby declared that for the above purpose a piece of land comprising cadastral plots Nos. 500-02 and parts of plots Nos. 505, 513 and 514 of taluk Baguladangi, and measuring, more or less, 6·80 acres of land, bounded on the—

North—By settlement plots Nos. 513 and 514 of taluk Baguladangi,

East—By settlement plots Nos. 503-05, 509 and 512 of taluk Baguladangi,

South—By taluk Kumarinagar,

West—By settlement plots Nos. 499, 574 and Patharaj river of taluk Baguladangi,

is required within the aforesaid village of Baguladangi.

This declaration is made under the provisions of section 6 of Act I of 1894, to all whom it may concern.

A plan of the land may be inspected in the office of the Deputy Commissioner of Jalpaiguri.

Howrah.—No. 9244L.A.—19th April 1937.—Whereas it appears to the Governor that land is required to be taken by Government partly at the public expense and partly at the expense of the Mohiary union board for a public purpose, viz., for Purbanapara-Ankurhati play ground, in the village of Ankurhati, pargana Paikan, zilla Howrah, it is hereby declared that for the above purpose a piece of land measuring, more or less, 2·28 acres, bounded on the—

North—By river Saraswati,

South—By union board road,

East—By lands of Imani Sheik and Rahim Sheik,

West—By lands of Anwar Sheik and Rajek Sheik.

is required within the aforesaid village of Ankurhati.

This declaration is made, under the provisions of section 6 of Act I of 1894, to all whom it may concern.

A plan of the land may be inspected in the office of the Collector of Howrah.

Emigration.

ERRATUM.

No. 9238Emi.—19th April 1937.—In line 12 of notification No. 5568Emi., dated the 9th March 1937, published at page 601, Part I of the *Calcutta Gazette* of the 18th *idem*, making certain amendments in the Rules of the Government of Bengal under the Tea Districts Emigrant Labour Act, 1932, *omit* the words "of sub-rule (*1*)".

Excluded Area.

NOTIFICATION.

Chittagong Hill Tracts.—No. 9088E.A.—16th April 1937.—In exercise of the power conferred by section 18 of the Chittagong Hill Tracts Regulation, 1900 (Regulation I of 1900), the Governor is pleased to make the following amendments in the rules for the administration of the Chittagong Hill Tracts, published under notification No. 123-P.D., dated the 1st May 1900, at page 429, Part I of the *Calcutta Gazette* of the 2nd May 1900, as subsequently amended, namely:—

I. *For* rule 38 of the said rules *substitute* the following:—

"38. *Administration of the circles and mauzas.*—The Circle Chiefs shall from an advisory council to the Deputy Commissioner, and shall assist him with information and advice on all matters which concern the administration of their respective circles, and shall exercise their authority as Chiefs in the prompt enforcement in the mauzas of their circle of all orders of the Deputy Commissioner. They shall visit all parts of their circles from time to time, and by personal supervision shall ensure that the work of the mauza headmen is efficient, in the collection of revenue, in the preservation of the public peace and in good administration. They shall use their influence to spread education and to imporve the health and material condition of the people resident in their circles. They shall at no time forcibly require "nazars" to be paid to them nor require the people to work without payment for their labour.

The mauza headmen shall collect, punctually credit and account for the revenues due from their mauzas. They shall obey the orders of the Deputy Commissioner, the Subdivisional Officers and the Chiefs. They shall preserve peace and order within their mauzas, and shall give information to the Deputy Commissioner of any changes in the position of villages or the population or changes in the extent of cultivation within their mauzas.

The Maini valley shall be administered under special orders of the Governor issued from time to time".

II. *For* rule 40 of the said rules *substitute* the following:—

"40. *Administrative powers of the Chiefs and Headmen.*—Save as otherwise provided in this rule the mauza headmen shall adjudicate on all disputes which may be brought to them by persons resident within their mauzas. They shall decide tribal cases in accordance with the social custom of the parties with powers of fine up to Rs. 25, of enforcing restitution, and of detention until the orders of the Deputy Commissioner in the matter are received.

Save as otherwise provided in this rule the Chiefs shall adjudicate on all disputes in their *khas mauzas* as headmen and shall try such tribal cases as are referred to them from the decision of headmen or by the headmen themselves.

The Chiefs shall have powers of fining up to Rs. 50, of enforcing restitution, and of detention until the orders of the Deputy Commissioner in the matter are received, in tribal cases, and their decisions shall, subject to the general revisional jurisdiction of the Deputy Commissioner, be final. In all cases in which the Chiefs or the headmen are unable to enforce the penalties imposed, they may apply to the Deputy Commissioner for assistance.

No court-fee or other imposition whatsoever shall be levied in cases tried by Chiefs or headmen, and no Chief or headman shall make any profit out of any case tried by him.

The Chiefs and headmen shall have no power to try any criminal or civil matters except as the Governor may from time to time empower them in this behalf.

The Deputy Commissioner shall have general revisional and concurrent jurisdiction over the exercise of all the powers under this rule by the Chiefs and headmen.

The offences specified below are altogether excluded from adjudication by Chiefs or headmen, namely:—

(1) offences against the State, against persons in the service of the Crown in India, or against public justice;

(2) riots in which grievous hurt has been caused or deadly weapons have been used;

(3) the following serious offences against the person, namely, murder, culpable homicide, voluntarily causing grievous hurt, wrongful confinement, rape, abduction, kidnapping, and unnatural offences;

(4) extortion, robbery, dacoity, lurking, house-trespass, or house-breaking when the property taken exceeds Rs. 50 in value;

(5) forgery;

(6) offences under Chapter IV of the Chittagong Hill Tracts Regulation, 1900;

(7) any other offence or class of offences which the Commissioner may specify in this behalf."

O. M. MARTIN,

Secy. to the Govt. of Bengal.

FOREST AND EXCISE DEPARTMENT.

Forests.

NOTIFICATION.

No. 8625For.—7th April 1937.—The following notification issued by the Government of India is republished for general information:—

No. F. 7-1/37-F., dated the 30th March 1937.

Mr. E. A. C. Modder, I.F.S., is appointed to officiate as Conservator of Forests, Bengal, with effect from the forenoon of the 13th March 1937.

Excise.

NOTIFICATION.

No. 8742Ex.—10th April 1937.—In exercise of the powers conferred by clause (7) of section 86 of the Bengal Excise Act, 1909 (Bengal Act V of 1909), the Governor is pleased to make the following amendments in notification No. 1382Ex., dated the 21st December 1936, prescribing the rates of license fees for the sale of foreign liquor "wholesale" and "retail", viz.:—

(*1*) In line 2 of item (*III*) of paragraph 1 of the said notification, for the words "and Dining cars" *substitute* the comma and words ", Dining cars and Dak Bungalows."

(*2*) In line 1 of paragraph 2 of the said notification, for the word and figures "and 171" *substitute* the comma, word and figures ", 171 and 172".

J. B. KINDERSLEY,

Secy. to the Govt. of Bengal (offg.).

Orders by the Commissioner of Excise and Salt, Bengal.

No. 2Exc.—8th April 1937.—The period o posting of Maulvi Md. Zaher-Uddin, Inspector of Excise and Salt, to Naogaon in the district of Rajshahi for work in connection with the cultivation and manufacture of ganja ordered in this office notification No. 50Exc., dated 11th November 1936, is extended up to 30th April 1937. On the expiry of this period he is transferred to the licensing branch in the district of Calcutta in the public interest.

No. 3Exc.—8th April 1937.—Babu Subal Chandra Roy, Inspector of Excise and Salt, Hooghly, is transferred to the Sugar (Excise) work with headquarters in Calcutta in the public interest.

No. 4Exc. — 8th April 1937. — Babu Bhupendra Narain Deb, temporary Inspector of Excise and Salt, is, on the expiry of the period of his temporary posting at Naogaon in the district of Rajshahi, posted to Hooghly in the public interest.

No. 5Exc.—8th April 1937.—Maulvi Abbas Ali Khan, Inspector of Excise and Salt, Naogaon, district Rajshahi, on leave, is, on the expiry of the same, posted to the Matches Preventive in the district of Calcutta in the public interest.

No. 6Exc. — 15th April 1937. — Maulvi Abbas Ali Khan, Inspector of Excise and Salt, was allowed leave on average pay for one month, with effect from the 8th March 1937, under rule 81 (*b*) (*ii*) of the Fundamental Rules.

D. MACPHERSON,

Commr. of Excise and Salt, Bengal.

CO-OPERATIVE CREDIT AND RURAL INDEBTEDNESS DEPARTMENT.

Debt Conciliation.

NOTIFICATIONS.

Rajshahi.—No. 803D.C.—16th April 1937.—In exercise of the power conferred by sub-section (*1*) of section 3 of the Bengal Agricultural Debtors Act, 1935 (Bengal Act VII of 1936), and in partial modification of notification No 11933L.R., dated the 19th August 1936, sanctioning the establishment of the Bamankola Debt Settlement Board, published at page 2030 of Part I of the *Calcutta Gazette*, dated the 27th idem, the Governor is pleased to declare the area for which the said Board is established to be the whole of Masinda union.

Howrah.—No. 804D.C.—16th April 1937.—In exercise of the power conferred by sub-section (*1*) of section 3 of the Bengal Agricultural Debtors Act, 1935 (Bengal Act VII of 1936), the Governor is pleased to establish the undermentioned Debt Settlement Boards in the Uluberia subdivision of the Howrah district for the local areas respectively specified against each:—

Name of Debt Settlement Board.		Name of union comprising the local area
Baneswarpur	...	Baneswarpur.
Banibon	...	Banibon.

2. In exercise of the power conferred by sub-section (*1*) of section 40 of the said Act, the Governor is pleased to appoint the Subdivisional Magistrate of Uluberia, *ex-officio*, as Ordinary Appellate Officer as defined in clause (*6*) of rule 2 of the Bengal Agricultural Debtors Rules, 1936, and the senior munsif of Uluberia, *ex-officio*, as Special Appellate Officer as defined in the said clause for each of the said local areas specified in paragraph 1.

Rangpur.—No. 805D.C.—16th April 1937.—In exercise of the power conferred by sub-section (*1*) of section 3 of the Bengal Agricultural Debtors Act, 1935 (Bengal Act VII of 1936), the Governor is pleased to establish the undermentioned Debt Settlement Boards in the Gaibandha subdivision of the Rangpur district for the local areas respectively specified against each:—

Name of Debt Settlement Board.		Name of union comprising the local area
Naldanga	...	Naldanga.
Lakshmipur	...	Lakshmipur.
Kamarpara	...	Kamarpara.
Sundarganj	...	Dahaband.
Mohimaganj	...	Mohimaganj.
Sadullapur	...	Banogram.

2. In exercise of the power conferred by sub-section (*1*) of section 40 of the said Act, the Governor is pleased to appoint the Subdivisional Magistrate of Gaibandha, *ex-officio*, as Ordinary Appellate Officer as defined in clause (*6*) of rule 2 of the Bengal Agricultural Debtors Rules, 1936, and the senior Munsif of Gaibandha, *ex-officio*, as Special Appellate Officer as defined in the said clause for each of the said local areas specified in paragraph 1.

Rangpur.—No. 806D.C.—16th April 1937.—In exercise of the power conferred by sub-section (*1*) of section 3 of the Bengal Agricultural Debtors Act, 1935 (Bengal Act VII of 1936), the Governor is pleased to establish the undermentioned Special Debt Settlement Board in the Kurigram subdivision of the Rangpur district for the local area shown against it:—

Name of Special Debt Settlement Board		Names of thanas comprising the local area.
Kurigram	...	Kurigram, Ulipur, Chilmari, and Rowmari.

2. In exercise of the power conferred by section 7 of the said Act, the Governor is pleased to empower the said Board to exercise powers under sub-section (*2*) of section 9, sub-section (*2*) of section 13, clause (*b*) of sub-section (*1*) of section 19, and section 21 of the said Act.

Rangpur.—No. 807D.C.—16th April 1937.—In exercise of the power conferred by sub-section (*1*) of section 3 of the Bengal Agricultural Debtors Act, 1935 (Bengal Act VII of 1936), the Governor is pleased to establish the undermentioned Debt Settlement Boards in the Sadar subdivision of the Rangpur district for the local areas respectively specified against each:—

Name of Debt Settlement Board.		Name of union comprising the local area.
Badarganj	...	Badarganj.
Nohalipara	...	Nohalipara.
Haridebpur	...	Haridebpur.
Pashuram	..	Pashuram.
Satgara	...	Satgara.
Chandanpat	...	Chandanpat.
Darsana	...	Darsana.
Lakshmitari	...	Lakshmitari.
Gajaghanta	..	Gajaghanta.

2. In exercise of the power conferred by sub-section (*1*) of section 40 of the said Act, the Governor is pleased to appoint the Subdivisional Magistrate of Sadar, *ex-officio*, as Ordinary Appellate Officer as defined in clause (*6*) of rule 2 of the Bengal Agricultural Debtors Rules, 1936, and the senior munsif of Sadar, *ex-officio*, as Special Appellate Officer as defined in the said clause for each of the said local areas specified in paragraph 1.

Hooghly.—No. 808D.C.—16th April 1937.—In exercise of the power conferred by sub-section (*1*) of section 3 of the Bengal Agricultural Debtors Act, 1935 (Bengal Act VII of 1936), the Governor is pleased to establish the undermentioned Debt Settlement Boards in the Sadar subdivision of the Hooghly district for the local areas respectively specified against each:—

Name of Debt Settlement Board		Name of union comprising the local area.
Mogra	...	Mogra.
Bakulia-Dhobapara	...	Bakulia-Dhobapara.
Somra	...	Somra.
Satithan	...	Satithan.
Polba	...	Polba.
Boinchee	...	Batke-Boinchee.
Pandua	...	Pandua.
Beloon Dhamasin	...	Beloon Dhamasin.
Dhaniakhali	...	Dhaniakhali.
Belmuri	...	Belmuri.

2. In exercise of the power conferred by sub-section (*1*) of section 40 of the said Act, the Governor is pleased to appoint the Subdivisional Magistrate of Sadar, *ex-officio*, as Ordinary Appellate Officer as defined in clause (*6*) of rule 2 of the Bengal Agricultural Debtors Rules, 1936, and the senior munsif of Sadar, *ex-officio*, as Special Appellate Officer as defined in the said clause for each of the said local areas specified in paragraph 1.

Hooghly.—No. 809D.C.—16th April 1937.—In exercise of the power conferred by sub-section (*1*) of section 3 of the Bengal Agricultural Debtors Act, 1935 (Bengal Act VII of 1936), the Governor is pleased to establish the undermentioned Debt Settlement Boards in the Arambagh subdivision of the Hooghly district for the local areas respectively specified aaginst each:—

Name of Debt Settlement Board.		Name of union comprising the local area.
Harinkhola	...	Harinkhola.
Bali	...	Bali.
Khanakul	...	Khanakul.
Rajhati	...	Rajhati.

2. In exercise of the power conferred by sub-section (*1*) of section 40 of the said Act, the Governor is pleased to appoint the Subdivisional Magistrate of Arambagh, *ex-officio*, as Ordinary Appellate Officer as defined in clause (*6*) of rule 2 of the Bengal Agricultural Debtors Rules, 1936, and the senior munsif of Arambagh, *ex-officio*, as Special Appellate Officer as defined in the said clause for each of the said local areas specified in paragraph 1.

Hooghly.—No. 810D.C.—16th April 1937.—In exercise of the power conferred by sub-section (*1*) of section 3 of the Bengal Agricultural Debtors Act, 1935 (Bengal Act VII of 1936), the Governor is pleased to establish the undermentioned Debt Settlement Boards in the Serampore subdivision of the Hooghly district for the local areas respectively specified against each:—

Name of Debt Settlement Board.		Name of union comprising the local area.
Begumpur	...	Begumpur.
Akuni-Echhapasar	...	Akuni-Echhapasar.
Antapur Jangipara	...	Antapur Jangipara.
Singur	...	Singur.
Tarakeswar	...	Tarakeswar.

2. In exercise of the power conferred by sub-section (*1*) of section 40 of the said Act, the Governor is pleased to appoint the Subdivisional Magistrate of Serampore, *ex-officio*, as Ordinary Appellate Officer as defined in clause (*6*) of rule 2 of the Bengal Agricultural Debtors Rules, 1936, and the senior munsif of Serampore, *ex-officio*, as Special Appellate Officer as defined in the said clause for each of the said local areas specified in paragraph 1.

Jessore.—No. 811D.C.—16th April 1937.—In exercise of the power conferred by sub-section (*1*) of section 3 of the Bengal Agricultural Debtors Act, 1935 (Bengal Act VII of 1936), the Governor is pleased to establish the undermentioned Debt Settlement Boards in the Magura subdivision of the Jessore district for the local areas respectively specified against each:—

Name of Debt Settlement Board.		Name of union comprising the local area.
Hajipur	...	Hajipur.
Atharokhada	...	Atharokhada.
Raghabdair	...	Raghabdair.
Maghi	...	Maghi.
Jagdal	...	Jagdal.
Srikole	...	Srikole.
Kadirpara	...	Kadirpara.
Satakhali	...	Satakhali.
Gangarampur	...	Gangarampur.
Borni	...	Borni.
Hariharnagar	...	Hariharnagar.
Benodepur	...	Benodepur.
Digha	...	Digha.
Bana	...	Bana.

2. In exercise of the power conferred by sub-section (*1*) of section 40 of the said Act, the Governor is pleased to appoint the Subdivisional Magistrate of Magura, *ex-officio*, as Ordinary Appellate Officer as defined in clause (*6*) of rule 2 of the Bengal Agricultural Debtors Rules, 1936, and the senior munsif of Magura, *ex-officio*, as Special Appellate Officer as defined in the said clause for each of the said local areas specified in paragraph 1.

Jessore.—No. 812D.C.—16th April 1937.—In exercise of the power conferred by sub-section (*1*) of section 3 of the Bengal Agricultural Debtors Act, 1935 (Bengal Act VII of 1936), the Governor is pleased to establish the undermentioned Debt Settlement Boards in the Bongaon subdivision of the Jessore district for the local areas respectively specified against each:—

Name of Debt Settlement Board.		Name of union comprising the local area.
Bongaon	...	Bongaon.
Gopalnagar	...	Gopalnagar.
Sarsha	...	Sarsha.
Sukpukuria	...	Sukpukuria.
Narayanpur	...	Narayanpur.
Boyra	...	Boyra.

2. In exercise of the power conferred by sub-section (*1*) of section 40 of the said Act, the Governor is pleased to appoint the Subdivisional Magistrate of Bongaon, *ex-officio*, as Ordinary Appellate Officer as defined in clause (*6*) of rule 2 of the Bengal Agricultural Debtors Rules, 1936, and the senior munsif of Bongaon, *ex-officio*, as Special Appellate Officer as defined in the said clause for each of the said local areas specified in paragraph 1.

24-Parganas.—No. 813D.C.—16th April 1937.—In exercise of the power conferred by sub-section (*1*) of section 3 of the Bengal Agricultural Debtors Act, 1935 (Bengal Act VII of 1936), the Governor is pleased to establish the undermentioned Debt Settlement Boards in the Sadar subdivision of the 24-Parganas district for the local areas respectively specified against each:—

Name of Debt Settlement Board.		Name of union comprising the local area.
Langalberia	...	Langalberia.
Mahestala	...	Mahestala.

2. In exercise of the power conferred by sub-section (*1*) of section 40 of the said Act, the Governor is pleased to appoint the Subdivisional Magistrate of *Sadar*, *ex-officio*, as Ordinary Appellate Officer as defined in clause (*6*) of rule 2 of the Bengal Agricultural Debtors Rules, 1936, and the senior munsif of Sadar, *ex-officio*, as Special Appellate Officer as defined in the said clause for each of the said local areas specified in paragraph 1.

24-Parganas.—No. 814D.C.—16th April 1937.—In exercise of the power conferred by sub-section (*1*) of section 3 of the Bengal Agricultural Debtors Act, 1935 (Bengal Act VII of 1936), the Governor is pleased to establish the undermentioned Debt Settlement Boards in the Barasat subdivision of the 24-Parganas district for the local areas respectively specified against each:—

Name of Debt Settlement Board.		Name of union comprising the local area.
Rajarhat	...	Rajarhat.
Chandpur	...	Chandpur.

2. In exercise of the power conferred by sub-section (*1*) of section 40 of the said Act, the Governor is pleased to appoint the Subdivisional Magistrate of Barasat, *ex-officio*, as Ordinary Appellate Officer as defined in clause (*6*) of rule 2 of the Bengal Agricultural Debtors Rules, 1936, and the senior munsif of Barasat, *ex-officio*, as Special Appellate Officer as defined in the said clause for each of the said local areas specified in paragraph 1.

Malda.—No. 815D.C.—16th April 1937.—In exercise of the power conferred by sub-section (*1*) of section 3 of the Bengal Agricultural Debtors Act, 1935 (Bengal Act VII of 1936), the Governor is pleased to establish the undermentioned Debt Settlement Boards in the Sadar subdivision of the Malda district for the local areas respectively specified against each:—

Name of Debt Settlement Board		Name of union comprising the local area.
Jalalpur	...	Jalalpur and Jaluabadhal.
Kaliachak	...	Kaliachak and Alinagar.
Birnagar	...	Birnagar.
Krishnapur	...	Krishnapur and Kumbhira.
Enayetpur	...	Enayetpur and Chauki Mirdadpur.
Manikchak	...	Manikchak.
Panchanandapur	...	Panchanandapur and Kakribandha-Jhowbona.
Sahebganj	...	Paranpur and Hamidpur.
Bedrabad	...	Bedrabad.
Akandabaria	...	Akandabaria.
Gohalbari	...	Gohalbari.
Daldali	...	Daldali and Jambaria.
Mathurapur	...	Mathurapur.
Nurpur	...	Nurpur.
Kotwali	...	Kotwali.
Khempur	...	Khempur.
Mukdampur	...	Mukdampur.
Matiharpur	...	Matiharpur.
Gourhand	...	Gourhand.
Mahanandapur	...	Mahanandapur.
Jalalpur	...	Jalalpur.
Chanchal	...	Chanchal and Kaligram.

Name of Debt Settlement Board.		Name of union comprising the local area.
Kushida	...	Kushida.
Harischandrapur	...	Harischandrapur.
Barduary	...	Barduary.
Daulatpur	...	Daulatpur.
Bhaluka	...	Bhaluka.
Kahala	...	Kahala.
Ratua	...	Debipur and Ratua.
Sreepur	...	Sreepur.
Sambalpur	...	Sambalpur.
Chak-kirty	...	Chak-kirty.
Mobarakpur	...	Mobarakpur.
Dhainagra	...	Dhainagra.
Shibganj	...	Shibganj.
Ghorapakhia	...	Ghorapakhia
Nayalabhanga	...	Nayalabhanga.
Bangabari	...	Bangabari.
Choudala	...	Choudala.
Boalia	...	Boalia.
Durlovpur	...	Durlovpur.
Radhakantapur	...	Radhakantapur.
Ramjibanpur	...	Ramjibanpur.
Lalagola	...	Gobindapur.
Muchia	...	Sahapur, Muchia and Aiho.
Jhilim	...	Jhilim.

2. In exercise of the power conferred by sub-section (*1*) of section 40 of the said Act, the Governor is pleased to appoint the Subdivisional Magistrate of Sadar, *ex-officio*, as Ordinary Appellate Officer as defined in clause (*6*) of rule 2 of the Bengal Agricultural Debtors Rules, 1936, and the senior munsif of Sadar, *ex-officio*, as Special Appellate Officer as defined in the said clause for each of the said local areas specified in paragraph 1.

Pabna.—No. 816D.C.—16th April 1937.—In exercise of the power conferred by sub-section (*1*) of section 3 of the Bengal Agricultural Debtors Act, 1935 (Bengal Act VII of 1936), the Governor is pleased to establish the undermentioned Debt Settlement Boards in the Sadar subdivision of the Pabna district for the local areas respectively specified against each;—

Name of Debt Settlement Board.		Name of union comprising the local area.
Nutan Bharenga	...	Nutan Bharenga.
Puran Bharenga	...	Puran Bharenga.
Karanja	...	Karanja.
Raghunathpur-Ataikula	...	Raghunathpur-Ataikula.
Dulai	...	Dulai.

2. In exercise of the power conferred by sub-section (*1*) of section 40 of the said Act, the Governor is pleased to appoint the Subdivisional Magistrate of Sadar, *ex-officio*, as Ordinary Appellate Officer as defined in clause (*6*) of rule 2 of the Bengal Agricultural Debtors Rules, 1936, and the senior munsif of Sadar, *ex-officio*, as Special Appellate Officer as defined in the said clause for each of the said local areas specified in paragraph 1.

Bogra.—No. 817D.C.—16th April 1937.—In exercise of the power conferred by sub-section (*1*) of section 3 of the Bengal Agricultural Debtors Act, 1935 (Bengal Act VII of 1936), the Governor is pleased to establish the undermentioned Debt Settlement Boards in the Sadar

subdivision of the Bogra district for the local areas respectively specified against each:—

Name of Debt Settlement Board.		Name of union comprising the local area.
Khottapara	...	Khottapara.
Rajapur	...	Rajapur.
Gokul	...	Gokul.
Namuja	...	Namuja.
Mirjapur	...	Mirjapur.
Kusumbi	...	Kusumbi.
Malancha	...	Malancha.
Murail	...	Murail.
Khetlal	...	Khetlal.
Punat	...	Punat.
Shibganj	...	Shibganj.
Deuli	...	Deuli.
Bohail	...	Bohail.

2. In exercise of the power conferred by sub-section (*1*) of section 40 of the said Act, the Governor is pleased to appoint the Subdivisional Magistrate of Sadar, *ex-officio*, as Ordinary Appellate Officer as defined in clause (*6*) of rule 2 of the Bengal Agricultural Debtors Rules, 1936, and the senior munsif of Sadar, *ex-officio*, as Special Appellate Officer as defined in the said clause for each of the said local areas specified in paragraph 1.

Jalpaiguri.—No. 818D.C.—16th April 1937.—In exercise of the power conferred by sub-section (*1*) of section 3 of the Bengal Agricultural Debtors Act, 1935 (Bengal Act VII of 1936), the Governor is pleased to establish the undermentioned Special Debt Settlement Board in the Alipurduar subdivision of the Jalpaiguri district for the local area shown against it:—

Name of Special Debt Settlement Board.		Names of thanas comprising the local area.
Alipurduar	...	Alipurduar, Kalchini, Kumargram Duar, Falakata and Madaribat, excluding tea gardens and forest area.

2. In exercise of the power conferred by section 7 of the said Act, the Governor is pleased to empower the said Board to exercise powers under sub-section (*2*) of section 9, sub-section (*2*) of section 13, clause (*b*) of sub-section (*1*) of section 19, and section 21 of the said Act.

Jalpaiguri.—No. 819D.C.—16th April 1937.—In exercise of the power conferred by sub-section (*1*) of section 3 of the Bengal Agricultural Debtors Act, 1935 (Bengal Act VII of 1936), the Governor is pleased to establish the undermentioned Special Debt Settlement Board in the Sadar subdivision of the Jalpaiguri district for the local area shown against it:—

Name of Special Debt Settlement Board		Names of thanas comprising the local area.
Jalpaiguri	...	Jalpaiguri, Rajganj, Tetulia, Boda, Debiganj, Pachagarh, Patgram, Mainaguri and Dhupgiri, excluding tea gardens and forest area.

2. In exercise of the power conferred by section 7 of the said Act, the Governor is pleased to empower the said board to exercise powers under sub-section (*2*) of section 9, sub-section (*2*) of section 13, clause (*b*) of sub-section (*1*) of section 19, and section 21 of the said Act.

Rangpur.—No. 836D.C.—16th April 1937.—In exercise of the power conferred by sub-section (*1*) of section 3 of the Bengal Agricultural Debtors Act, 1935 (Bengal Act VII of 1936), the Governor is pleased to establish the undermentioned Debt Settlement Boards in the Kurigram subdivision of the Rangpur district for the local areas respectively specified against each :—

Name of Debt Settlement Board.	Names of mauzas comprising the local area with jurisdiction list number of each mauza.	
Nageswari ...	Payradanga ...	82
	Shyampur } Ballavpur } ...	76
	Badijamapur ...	77
	Araji-Kumarpur ...	83
	Kumarpur ...	84
Mahendranagar ...	Chinipara ...	78
	Nizpara ...	79
	Telipara ...	80
	Batrish-Hajari ...	81
	Makra-Dhadogach ...	83
	Dhadogach ...	84
	Haranarayan ...	85
	Kashipur ...	86
	Bari-Mrittinga ...	87
	Gabai ...	88
	Singader ...	89
	Surnarayan ...	90
	Satpatki ...	91
	Haradatta ...	133
	Arzi-Fatekhan ...	134
	Kismat-Mrittinga ...	135
	Manoram ...	138
	Kumarbhita ...	139
	Akhilmamud ...	141
	Dhananjoy ...	142
	Haradeb-Upanchaki ...	143
	Guridaha ...	144
	Chota-Mrittinga ...	145
	Ramakanto ...	146
	Harithakur ...	199
	Mrittinga-Harodanga ...	200
	Naodabash ...	201
	Patronoy ...	209
	Baje-Mujrai ...	210
	Ramjiban ..	211
	Kismat-Dhadogach ...	212
Chhinai ...	Chhinai-Kismat ...	238
	Jagadish ...	240
	Mekhli ...	241
	Chhinai ...	242
	Chaturbhuj ...	243
	Kaloa ...	245
	Chhinai ...	248
	Joykumar ...	250
	Debottar ...	251
	Ramratan ...	252
	Khanda-Khetra ...	253
	Baneswar-Nilkantha ..	254
	Nilai ...	176
	Satrajit ...	152
	Ramkarji ...	151
	Acharja ...	153
	Mirerbari ...	262
	Guru-Krishna ...	264
	Paikpara ...	293
	Debaloy ...	296

Name of Debt Settlement Board.		Names of mauzas comprising the local area with jurisdiction list number of each mauza.		
Joymonirhat	...	Dewanerkhamar	...	47
		Aminerkhamar	...	48
		Chota-Khatamari	...	49
		Baro-Khatamari	...	50
		Bhikumarirbhati	...	51
		Bhojanpur	...	55
		Singjhar	...	56
		Pratham Khanda-Bakanirchara	...	57
		Ditiyakhanda-Bakanirchara	...	58
		Trityakhanda-Bakanirchara	...	59
		Poaturkuti	...	60
Dharanibari	...	Dharanibari	...	182
		Madhupur	...	115
		Abdul Hakim	...	235
		Madartari	...	114
		Bakarai-Madhupur	...	112
		Malatibari	...	180
		Digor Malatibari	...	181
Dhamsreni	...	Dhamsreni	...	233
		Jonaidanga	...	188
		Bagchir-Khamar	...	232
Buraburi	...	Buraburi	...	79
		Satbhita	...	83
		Atharapaika	...	109
		Dalon	...	82
		Fakirmamud	...	81
		Kalakata	...	84
		Kamdeb	...	77
		Patronobis	...	110
		Khamar Lakshminarain	...	82
		Botla	...	78
		Maharaneegunge (Bakshigunge)	...	83
Fulbari	...	Chandrakhana	...	20
		Kuti-Chandrakhana	...	23
		Paninachherkuti	...	21
		Bidyabagish	...	22
		Kabirmamud	...	18
		Kismat-Prankrisna	...	37
		Bujrerkhamar	...	35
		Nagdaha	...	25
		Krishnahari	...	36

2. In exercise of the power conferred by sub-section (*1*) of section 40 of the said Act, the Governor is pleased to appoint the Subdivisional Magistrate of Kurigram, *ex-officio*, as Ordinary Appellate Officer as defined in clause (*6*) of rule 2 of the Bengal Agricultural Debtors Rules, 1936, and the senior munsif of Kurigram, *ex-officio*, as Special Appellate Officer as defined in the said clause for each of the said local areas specified in paragraph 1.

Bogra.—No. 837D.C.—16th April 1937.- In exercise of the power conferred by sub-section (*1*) of section 3 of the Bengal Agricultural Debtors Act, 1935 (Bengal Act VII of 1936), the Governor is pleased to establish the undermentioned Special Debt Settlement Board in the Bogra district for the local area shown against it:—

Name of Special Debt Settlement Board		Names of thanas comprising the local area.
Bogra	...	The whole of the district of Bogra.

2. In exercise of the power conferred by section 7 of the said Act, the Governor is pleased to empower the said Board to exercise powers under sub-section (*2*) of section 9, sub-section (*2*) of section 13, clause (*b*) of sub-section (*1*) of section 19, and section 21 of the said Act.

E. W. HOLLAND,

Joint Secy. to the Govt. of Bengal.

BENGAL LEGISLATIVE ASSEMBLY.

NOTIFICATION.

No. 760L.A.—19th April, 1937.

Bengal Legislative Council.

Election by the members of the Bengal Legislative Assembly.

Notice in respect of the returns of election expenses published under the provisions of rule 9 of the Bengal Legislative Assembly and the Bengal Legislative Council Electoral (Election Expenses and Election Petitions) Rules, 1936.

	Name of the candidate.	Date on which the return of election expenses and the declarations have been lodged.
1.	Mr. Abdur Razak	5th April, 1937.
2.	Rai Umesh Chandra Chakladar Bahadur	5th April, 1937.
3.	Mr. Sudhindra Nath Basu ...	6th April, 1937.
4.	Mr. Rashidul Hassan ...	6th April, 1937.
5.	Mr. Surpat Singh	6th April, 1937.
6.	Haji Md Abul Mansur Mia Palwan ...	6th April, 1937.
7.	Mr. Kader Baksh	6th April, 1937.
8.	Mr. Asimananda Ray	7th April, 1937.
9.	Prof. Shahid Suhrawardy ...	9th April, 1937.
10.	Khan Bahadur Sharfuddin Ahmed ...	10th April, 1937.

The returns can be inspected in the office of the Secretary to the Bengal Legislative Assembly, Council House, Calcutta, on any working day between the hours of 11 a.m. and 3 p.m. on payment of the prescribed fee of Re. 1 only. Attested copies of the return or any part of it may be obtained from that office on payment of a fee of Rs. 2 only, for each copy.

K. ALI AFZAL, *Returning Officer.*

BOARD OF REVENUE, BENGAL.

NOTIFICATION.

Chittagong.—No. 5960C.P.—15th April 1937.—In exercise of powers conferred by clause (2) of section 8 of the Bengal Land Revenue (Assistant Collectors) Regulation, 1821 (IV of 1821), the Board of Revenue authorises Babu Hira Lal Karmakar, Settlement Kanungo, who has been placed on duty in connection with the maintenance, for the purposes of section 158A of the Bengal Tenancy Act, 1885, of the record-of-rights of the estate of Rai Upendra Lal Ray Bahadur and others in the district of Chittagong, to exercise and perform within the local limits of the said estate any of the powers and duties vested in the Collectors of Land Revenue under any enactment in force therein for the purpose of the said work of maintenance of the record-of-rights.

S. BANERJEE,

Secy. to the Board of Revenue, Bengal.

TREASURY NOTICES.

Suri, the 10th April 1937.

Uncovenanted Deputy Collector Babu Kanti Chandra Mukerjee is placed in charge of Birbhum Treasury, with effect from the afternoon of 9th April 1937, and is authorised to draw bills on other treasuries, *vice* Babu Surendra Nath Banerji, Sub-Deputy Collector.

A. H. M. ABDUL HYE, *Collector.*

Orders by the Deputy Accountant-General, Bengal.

The Treasury Buildings, the 15th April 1937.

It is notified that the refund order book No. 774 containing 50 orders is in use by the Income-Tax Office, Central Salaries Circle, Calcutta, with effect from the 2nd April 1937.

C. BHASKARAIYA,

Dy. Accountant-General, Bengal.

SHERIFF'S OFFICE.

The 11th March 1937.

Notice is hereby given that the Second Criminal Sessions of the year 1937 of the High Court of Judicature at Fort William in Bengal for the town of Calcutta and Factory of Fort William and the places subordinate thereto, will be held at the Court House, in the town of Calcutta, on Monday, the 3rd day of May 1937, at 11 o'clock in the forenoon, and thenceforward from day to day until the said sessions be over. And it is hereby proclaimed that all persons who are to prosecute any of the prisoners to be brought up for trial at the said sessions be present then and there to prosecute.

S. C. LAW, *Sheriff.*

সরিফ আফিস, সন ১৯৩৭ সালের ১১ই মার্চ।

সকলকে সমাচার দেওয়া যাইতেছে যে, সুবে বাঙ্গালার ফোর্ট উইলিয়ম দুর্গের অধীনে সহর কলিকাতার ও অন্যান্য স্থানের ফৌজদারী বিচার নিষ্পত্তি জন্য আগামী সন ১৯৩৭ সালের ৩রা মে সোমবার বেলা ১১ ঘটিকার সময় এবং যে পর্য্যন্ত সেশিয়ানের কার্য্য সমাধা না হয়, প্রতিদিন উক্ত সময়ে কলিকাতার হাইকোর্টের আপন আদালত ঘরে সন ১৯৩৭ সালের দ্বিতীয় ক্রিমিন্যাল সেশিয়ান বসিবেক, এবং এতদ্বারা প্রচার করা যাইতেছে যে, যে সকল ব্যক্তি কোন কয়েদীর বিরুদ্ধে কোন ফৌজদারী মিছিল করিবেক, তাহারা উক্ত স্থানে উক্ত সময়ে হাজির থাকিয়া মোকদ্দমা করে। ইতি।

এস্, সি, লাহা,
সরিফ।

ORDERS BY THE HIGH COURT OF JUDICATURE AT FORT WILLIAM IN BENGAL.

Appointments and Transfers.

Tippera-Birbhum. — No. 4407A. — 12th April 1937.—Babu Nagendra Nath Mukharji, munsif of Chandpur, in the district of Tippera, is appointed to be a munsif in the district of Birbhum, to be ordinarily stationed at Rampurhat, *vice* Babu Satyendra Nath Palit.

Birbhum-Tippera.—No. 4413A.—12th April 1937.—Babu Satyendra Nath Palit, munsif of Rampurhat, in the district of Birbhum, is appointed to be a munsif in the district of Tippera, to be ordinarily stationed at Chandpur, *vice* Babu Nagendra Nath Mukharji.

Powers.

Tippera.—No. 4395A.—12th April 1937.—Babu Satyendra Nath Palit, munsif, under orders of transfer to Chandpur, in the district of Tippera, is vested under section 19, sub-section (2) of the Bengal, Agra and Assam Civil Courts Act, 1887 (XII of 1887), as amended by the Decentralization Act, 1914 (IV of 1914), with powers to try, under the ordinary procedure, original suits up to the value of Rs. 2,000 arising within the local limits of the Chandpur munsifi.

Tippera.—No. 4398A.—12th April 1937. — Babu Satyendra Nath Palit, munsif, under orders of transfer to Chandpur, in the district of Tippera, is vested with the powers of a Judge of a Court of Small Causes for the trial of suits cognizable by such a Court up to the value of Rs. 300 within the local limits of the Chandpur munsifi.

Birbhum.—No. 4401A.—12th April 1937.—Babu Nagendra Nath Mukharji, munsif, under orders of transfer to Rampurhat, in the district of Birbhum, is vested under section 19, sub-section (2) of the Bengal, Agra and Assam Civil Courts Act, 1887 (XII of 1887), as amended by the Decentralization Act, 1914 (IV of 1914), with powers to try, under the ordinary procedure, original suits up to the value of Rs. 2,000 arising within the local limits of the Rampurhat munsifi.

Birbhum.—No. 4404A.—12th April 1937.—Babu Nagendra Nath Mukharji, munsif, under orders of transfer to Rampurhat, in the district of Birbhum, is vested with the powers of a Judge of a Court of Small Causes for the trial of suits cognizable by such a Court up to the value of Rs. 300 within the local limits of the Rampurhat munsifi.

N. L. HINDLEY, *Registrar, Appellate Side (offg.).*

ORDERS BY COMMISSIONERS OF DIVISIONS.

Burdwan Division—Chinsura.

No. 1296J.G.—10th April 1937. — Babu Nutbehari Chatterjee, Sub-Deputy Collector, Howrah, is transferred to Rampurhat, in the district of Birbhum, for employment on general duty. The transfer is made in the public interest.

No. 500M.—12th April 1937.—In exercise of the power conferred by section 50 of the Bengal Municipal Act, 1932 (Bengal Act XV of 1932), it is hereby notified for general information that at a by-election of the Ghatal Municipality in the district of Midnapore held on 21st March 1937 the following gentlemen were duly elected (uncontested) as Commissioners of that municipality:—

Ward A.

Babu Monoj Nath Ghanteswari (*vice* Babu Motilal Bhattacherjee, resigned.

Ward B.

Babu Hari Satya Roy, *vice* Rai Sahib Sreecharan Bag, resigned.

Ward C.

Babu Sitaram Kundoo, *vice* Babu Gobordhan Das, deceased.

No. 1334J.G. — 12th April 1937. — The orders contained in this office notification No. 1040J.G. of the 20th March 1937, granting leave on average pay for one day, viz., 25th March 1937, under rule 81 (*b*) (*ii*) of the Fundamental Rules, to Maulvi Muhammad Ibrahim, Sub-Deputy Collector, Tamluk, district Midnapore, are cancelled.

A. J. DASH, *Commissioner.*

No. 1217E.—16th April 1937.—It is hereby notified that Mr. Prova Nath Singh Roy, a candidate for election from the Burdwan Landholders' Constituency of the Bengal Legislative Assembly, has filed on the 7th April 1937 his return of election expenses and the declarations in respect thereof, as required under sub-rules (*1*) and (*2*) of rule 7 of the Bengal Legislative Assembly and the Bengal Legislative Council Electoral (Election Expenses and Election Petitions) Rules, 1936. These can be inspected in the office of the Commissioner of the Burdwan Division, Chinsura, during office hours on payment of a fee of one rupee.

2. Any person may, on payment of a fee of Rs. 2 for each copy, obtain attested copies of the return or declaration or of any part thereof.

A. J. DASH, *Commissioner and Returning Officer.*

Burdwan, the 7th April 1937.

It is hereby notified for general information that, under section 13 of the Bengal Village Self-Government Act, 1919 (Bengal Act V of 1919), read with rule 36 of the rules for the election and appointment of members of union boards, etc., Mr. S. Tidy has been duly appointed by the District Magistrate of Burdwan to be a member of Ondal union board in police-station Ondal in the Asansol subdivision of Burdwan, *vice* Mr. R. H. Tangri, resigned.

It is hereby notified for general information that, under section 13 of the Bengal Village Self-Government Act, 1919 (Bengal Act V of 1919), read with rule 36 of the rules for the election and appointment of members of union boards, etc., Dr. Bimala Charan Das has been duly appointed by the District Magistrate of Burdwan to be a member of the Kalipahari union board in police-station Asansol in the Asansol subdivision of Burdwan, *vice* Babu Biraj Mohan Mukherjee, resigned.

It is hereby notified for general information that, under section 13 of the Bengal Village Self-Government Act, 1919 (Bengal Act V of 1919), read with rule 36 of the rules for the election and appointment of members of union boards, etc., Babu Ashutosh Sarkar has been duly appointed by the District Magistrate of Burdwan to be a member of the Jemeri union board in police-station Raniganj in the Asansol subdivision of Burdwan, *vice* Babu Ram Rudra Chatterjee, deceased.

Burdwan, the 9th April 1937.

It is hereby notified for general information that, under section 13 of the Bengal Village Self-Government Act, 1919 (Bengal Act V of 1919), read with rule 36 of the rules for the election and appointment of members of union boards, etc., Dr. Manindra Nath Paul has been duly appointed by the District Magistrate of Burdwan to be a member of the Ukhra union board in police-station Ondal in the Asansol subdivision of Burdwan, *vice* Dr. Dwija Pada Mukherjee, resigned.

It is hereby notified for general information that, under section 13 of the Bengal Village Self-Government Act, 1919 (Bengal Act V of 1919), read with rule 36 of the rules for the election and appointment of members of union boards, etc., Babu Surendra Nath Mitra has been duly appointed by the District Magistrate of Burdwan to be a member of the Ukhra union board in police-station Ondal in the Asansol subdivision of Burdwan, *vice* Mr. Charles E. Ashcroft, resigned.

S. DUTT, *District Magistrate.*

Bankura, the 10th April 1937.

Erratum. — No. 3526J. — In notification No. 3067J., dated the 23rd March 1937, published at page 842, Part I of the *Calcutta Gazette*, dated the 8th April 1937, *for* the name "Babu Bibhuty Bhushan Chakravarty" *read* "Babu Bibhuty Bhushan Chaudhury".

Bankura, the 12th April 1937.

No. 3570J.—It is hereby notified for general information that, under section 13 of the Bengal Village Self-Government Act, 1919 (Bengal Act V of 1919), read with rule 35 of the rules for election and appointment of members of union boards, Babu Joy Gopal Mohanti has been appointed as a member of Nethurpur union board in police-station Raipur in the Sadar subdivision of the district of Bankura, *vice* Babu Mahadev Mohanti, deceased.

J. M. CHATARJI, *District Magistrate.*

Chinsura, the 16th April 1937.

No. 3564J.G.—It is hereby notified for general information that, under section 13 of the Bengal Village Self-Government Act, 1919 (Bengal Act V of 1919), read with rule 35 of the rules for the election and appointment of members of union boards, etc., Babu Basanta Kumar Chatterjee has been duly elected to be a member for Ward No. III of the Akuni-Ichhapasar union board in police-station Chanditola in the Serampore subdivision of the district of Hooghly, *vice* Babu Sarat Chandra Chakravarty, deceased.

S. P. GHOSH, *District Magistrate.*

Suri, the 8th March 1937.

It is hereby notified for general information that Maulvi Haji Hamid-ur-Rahaman, a candidate for the seat in the Birbhum Rural Muhammadan Constituency of the Bengal Legislative Assembly, has filed his return of election expenses and declarations on the 25th March 1937. The return can be inspected in the office of the District Magistrate, Birbhum at Suri, on any working day during office hours on payment of a fee of rupee one. Attested copy of the return or any part thereof may be obtained on payment of a fee of Rs. 2 for each copy.

A. HYE, *Returning Officer.*

Chinsura, the 12th April 1937.

No. 2509J.G.—It is hereby notified that Babu Amulya Charan Naskar of Jothvim, thana Bhangore, post office Rajarhat Bishnupur, district 24-Parganas, a candidate for election in respect of the seat reserved for the scheduled caste from the Hooghly North-East (Rural) General Constituency of the Bengal Legislative Assembly, whose nomination paper was rejected at the time of scrutiny, has filed on the 10th April 1937 his return of election expenses and declarations in respect thereof as required under sub-rules (*1*) and (*2*) of rule 7 of the Bengal Legislative Assembly and the Bengal Legislative Council Electoral (Election Expenses and Election Petitions) Rules, 1936. These can be inspected in the office of the District Magistrate of Hooghly, Chinsura, on payment of Re. 1 only between the hours of 11 a.m. and 4 p.m. on the days the office is open for a week from the publication of this notice in the *Calcutta Gazette*, or from the 21st April 1937, whichever is later.

2. Any person may, on payment of a fee of Rs. 2 only for each copy, obtain attested copies of the returns or declarations or of any part thereof.

S. P. GHOSH, *Returning Officer.*

Chinsura, the 15th April 1937.

No. 3503J.G.—It is hereby notified that Babu Moni Kumar Das of Khatirbazar Mahesh, post office Rishra, district Hooghly, a candidate for election in respect of the seat reserved for the scheduled caste from the Hooghly North-East (Rural) General Constituency of the Bengal Legislative Assembly, whose nomination paper was rejected at the time of scrutiny, has filed on the 12th April 1937 his return of election expenses and declaration in respect thereof, as required under sub-rules (*1*) and (*2*) of rule 7 of the Bengal Legislative Assembly and the Bengal Legislative Council Electoral (Election Expenses and Election Petitions) Rules, 1936. These can be inspected in the office of the District Magistrate, Hooghly, Chinsura, on payment of Re. 1 only between the hours of 11 a.m. and 4 p.m. on the days the office is open, for a week from the publication of this notice in the *Calcutta Gazette*, or from the 21st April 1937, whichever is later.

2. Any person may, on payment of a fee of Rs. 2 only for each copy, obtain attested copies of the returns or declaration or of any part thereof.

S. P. GHOSH, *Returning Officer.*

Orders by the Deputy Inspector-General of Police, Burdwan Range.

Chinsurah.—No. 2748.—16th April 1937.—Mr. W. B. Webster, Inspector, E. I. Railway, Howrah, is granted 1 month's privilege leave, on medical certificate, in extension of the leave already granted to him.

J. M. MACKENZIE,

Deputy Inspector-General of Police (offg.).

Chittagong Division—Chittagong.

No. 2121G.—8th April 1937.—In exercise of the power conferred by sub-section (2) of section 3 of the Bengal Agricultural Debtors Act, 1935 (Bengal Act VII of 1936), delegated to Commissioners by Government notification No. 10105-8L.R., dated the 14th July 1936, the undersigned is pleased to appoint Maulvi Golam Husain to be a member of Chhagalnaiya Debt Settlement Board in the Feni subdivision of the Noakhali district, in place of Munshi Umed Raja, resigned.

J. D. V. HODGE, *Commissioner.*

Chittagong, the 10th April 1937.

No. 3454.—It is hereby notified for general information that, under section 13 of the Bengal Village Self-Government Act (Act V of 1919), read with rule 35 of the election and appointment of members of union boards, Munshi Md. Abdul Aziz Matbar has been duly elected to be a member of Badarkhali union board No. III in police-station Chakaria in Cox's Bazar subdivision of the district of Chittagong, *vice* Munshi Siddique Ahmad, deceased.

No. 3456.—It is hereby notified for general information that, under section 13 of the Bengal Village Self-Government Act (Act V of 1919), read with rule 36 of the rules for election and appointment of members of union boards, Munshi Syed Ahamed has been duly appointed to be a member of Gumanmardan union board No. IV in police-station Hathazari in Sadar "A" subdivision of the district of Chittagong, *vice* Maulvi Nur Ahamed, deceased.

A. RAHMAN,
for *Addl. District Magistrate.*

Brahmanbaria, the 9th April 1937.

It is hereby notified for general information that Maulvi Mizanur Rahman Bhuia, a candidate for a seat in the Brahmanbaria North Muhammadan Rural Constituency of the Bengal Legislative Assembly, of which I am the Returning Officer, lodged his return of election expenses and declaration with me on the 9th April 1937.

Any person is, on payment of a fee of Re. 1 entitled to inspect such return or declaration in my office from 11 a.m. to 5 p.m., and on payment of a fee of Rs. 2 for each copy to obtain attested copies thereof or of any part thereof.

A. RAHMAN, *Returning Officer (Subdivisional Officer).*

Chittagong, the 12th April 1937.

It is hereby notified under rule 9 of the Bengal Legislative Assembly and the Bengal Legislative Council Electoral (Election Expenses and Election Petitions) Rules, 1936, that Maulvi Siddique Ahamed Chowdhury, a candidate for the Chittagong South Central (Muhammadan) Rural Constituency of the Bengal Legislative Assembly, lodged his return of election expenses with the undersigned on the 8th April 1937.

The return and the declaration can be inspected in the office of the Additional Sadar Subdivisional Officer on payment of a fee of Re. 1 between the hours of 11 a.m. and 5 p.m.

N. M. BARDHAN, *Addl. Sadar Subdivisional Officer (Returning Officer).*

Feni, the 12th April 1937.

No. 1029M.—It is notified for general information, under rule 9 of the Bengal Legislative Assembly and the Bengal Legislative Council Electoral (Election Expenses) Rules, 1936, that the return of the election expenses supported by declarations for the last general election of a member to the Bengal Legislative Assembly from the Feni Muhammadan Rural Constituency has been lodged by the candidate Abdur Razzak Maulvi on the 5th March 1937.

Any person shall, on payment of a fee of one rupee, be entitled to inspect the above return or declaration in the office of the Returning Officer, Feni, between the hours of 11 a.m. and 5 p.m. on office days.

S. A. ULLAH, *Returning Officer (Subdivisional Officer).*

Feni, the 12th April 1937.

No. 1030M.—It is notified for general information, under rule 9 of the Bengal Legislative Assembly and the Bengal Legislative Council Electoral (Election Expenses) Rules, 1936, that the return of the election expenses supported by declarations for the last general election of a member to the Bengal Legislative Assembly from the Feni Muhammadan Rural Constituency has been lodged by the candidate Nurul Huq Choudhury on the 8th March 1937.

Any person shall, on payment of a fee of one rupee, be entitled to inspect the above return or declaration in the office of the Returning Officer, Feni, between the hours of 11 a.m. and 5 p.m. on office days.

S. A. ULLAH, *Returning Officer (Subdivisional Officer).*

Feni, the 12th April 1937.

No. 1031M.—It is notified for general information, under rule 9 of the Bengal Legislative Assembly and the Bengal Legislative Council Electoral (Election Expenses) Rules, 1936, that the return of the election

expenses supported by declarations for the last general election of a member to the Bengal Legislative Assembly from the Feni Muhammadan Rural Constituency has been lodged by the candidate Mohammed Sadeque Mia on the 10th March 1937.

Any person shall, on payment of a fee of one rupee, be entitled to inspect the above return or declaration in the office of the Returning Officer, Feni, between the hours of 11 a.m. and 5 p.m. on office days.

S. A. ULLAH, *Returning Officer (Subdivisional Officer).*

Orders by the Deputy Inspector-General of Police, Bakarganj Range.

Barisal. — No. 1548. — 8th April 1937. — Babu Subodh Chandra Mazumdar, Officiating Inspector, Noakhali, will continue to act as such, *vice* Rai Sahib Prabhat Chandra Datta, Inspector, confirmed in the rank of Deputy Superintendent.

Sub-Inspector Bazlur Rashid Chaudhuri (at present officiating as Inspector in Tippera, *vice* Babu Subarna Kumar Basu, Inspector, on leave), is transferred to Bakarganj in exchange with Sub-Inspector Suresh Chandra Chaudhuri (at present officiating as Inspector in Bakarganj, *vice* Babu Manoranjan Bhattacharji, acting as Deputy Superintendent in the Central Intelligence Branch).

The former will continue to act as Inspector in Bakarganj, *vice* Babu Manoranjan Bhattacharji, and the latter is appointed to officiate as Court Inspector in Tippera, *vice* Babu Nagendra Bihari Basu, Court Inspector, granted leave with effect from the 4th May 1937.

The transfers are sanctioned in the interests of public service.

G. H. MANNOOCH,
Deputy Inspector-General of Police (offg.).

Dacca Division—Dacca.

No. 1299R.—9th April 1937.—In exercise of the power delegated to me under Government notification No. 10106L.R., dated the 14th July 1936, and with reference to notification No. 73471L.R., dated the 23rd March 1937, sanctioning the establishment of the undermentioned Debt Settlement Boards in the Patuakhali subdivision of the Bakarganj district, published at page 758, Part I of the *Calcutta Gazette*, dated the 1st April 1937, I hereby appoint under section 3 (2) of the Bengal Agricultural Debtors Act, 1935 (Bengal Act VII of 1936), the following persons to be Chairmen and members of the said Boards as noted above their names for a term of three years:—

Ayla Debt Settlement Board.

Maulvi Hajrat Ali Chaudhury, Chairman.

Members.

M. Kanchan Ali Howlader.
M. Arshed Ali Howlader.
M. Hashem Ali.
M. Belayet Ali.

Baragourichanna Debt Settlement Board.

Maulvi Abdul Khabir, Chairman.

Members.

M. Arshed Ali Akon.
M. Jainaluddin Howlader.
M. Mahammad Arshed Ali.
Babu Bistu Ch. Kapali.

Fuljhury Debt Settlement Board.

Maulvi Mahmed Yeasin Akon, Chairman.

Members.

M. Hosonuddin Matbar.
Babu Rajendra Kumar Podder.
M. Abdul Ali.
M. Manik Sikder.

Kaunia Debt Settlement Board.

Maulvi Abdur Rahman Khan, Chairman.

Members.

M. Fakhruddin Kazi.
Babu Prasanna Kumar Chakraborty.
M. Daliluddin Ahmed.
M. Arshed Ali Sikder.

Kanakdia Debt Settlement Board.

Maulvi Azaharuddin Ahmed, Chairman.

Members.

Syed Hossain Ali.
M. Apser Ali Talukder.
M. Nur Mahmed.
Babu Rukkini Kumar Pal.

Madanpur Debt Settlement Board.

Maulvi Abul Awal, Chairman.

Members.

Babu Jogesh Ch. Saha.
M. Aminaddin Howladar.
Babu Nagendra Nath Pal.
M. Joynal Abdin.

No. 1301R.—9th April 1937.—In exercise of the power delegated to me under Government notification No. 10106L.R., dated the 14th July 1936, and with reference to notification No. 7348L.R., dated the 23rd March 1937, sanctioning the establishment of the undermentioned Debt Setlement Boards in the Pirojpur subdivision of the Bakarganj district, published at page 758, Part I of the *Calcutta Gazette*, dated the 1st April 1937, I hereby appoint under section 3 (2) of the Bengal Agricultural Debtors Act, 1935 (Bengal Act VII of 1936), the following persons to be Chairmen and members of the said Boards as noted above their names for a term of three years:—

Kadamtala Debt Settlement Board.

Maulvi Mominuddin Molla, Chairman.

Members.

Babu Gopal Chandra Dutta.
Maulvi Yasin Sarder.
Babu Nibaran Chandra Sikdar.
Maulvi Abdur Rahman Sikdar.

Sayna-Raghunathpur Debt Settlement Board.

Maulvi Ansaruddin Ahmed, Chairman.

Members.

Maulvi Ali Ahmed Sikdar.
Babu Umacharan Das.
Maulvi Abdur Razzak Fakir.
Babu Prokash Chandra Biswas.

Illuhar Debt Settlement Board.

Maulvi Syed Samsul Huda, Chairman.

Members.

Munshi Nur Mohammad Molla.
Maulvi Syed Md. Abdul Latif.
Babu Rash Behari Sarker.
Babu Bhagaban Chandra Baroi.

Salia-Bakpur Debt Settlement Board.

Babu Birendra Nath Roy, Chairman.

Members.

Dr. Asmat Ali Talukdar.
Maulvi Kazi Montazuddin.
Maulvi Razzab Ali.
Babu Satindra Nath Sen.

Chakhar-Khalishakota Debt Settlement Board.

Babu Jhanendra Nath Sen, Chairman.

Members.

Maulvi Sarafuddin Nur Ahmed Majumdar.
Babu Manoranjan Chatterjee.
Maulvi Afsaruddin Khondaker.
Kari Mohammad Samsuddin.

Matibhanga-Baniari Debt Settlement Board.

Babu Jatindra Nath Guha, Chairman.

Members.

Munshi Madhu Sheikh.
Babu Chandi Charan Halder.
M. Rafizuddin Molla.
M. Ainuddin Khan.

Malikhali-Deulbari-Dobra Debt Settlement Board.

Maulvi Mohammad Isahaque, Chairman.

Members.

Babu Banamali Basu.
M. Abdul Gafur Fakir.
Babu Madhab Chandra Bagchi.
Babu Madhab Chandra Roy.

No. 1342R.—12th April 1937.—In exercise of the powers delegated to me by Government notification No. 10106L.R., dated the 14th July 1936, and with reference to Government notification No. 10094L.R., dated the 14th July 1936, appointing certain gentlemen to be Chairman and members of the Chandshi Debt Settlement Board in the Sadar subdivision of the Bakarganj district, I hereby cancel under section 4 of the Bengal Agricultural Debtors Act, 1936, the appointment of Babu Ashutosh Ghose, Chairman of the said Debt Settlement Board, and appoint under section 3 (2) of the Act Babu Rai Charan Pal, retired Sub-Deputy Collector, as Chairman in his place.

No. 2051J.—15th April 1937.—It is hereby notified for general information that, in exercise of the power conferred by section 19(2) of the Bengal Local Self-Government Act (Bengal Act III of 1885), I hereby appoint Maulvi Azizuddin Ahmed, Pleader, Barisal, to be a member of the Sadar local board in the district of Bakarganj in place of Maulvi Abdul Gaffur, deceased.

No. 1423R.—17th April 1937.—In exercise of the powers delegated to me under Government notification No. 10106L.R., dated the 14th July 1937, and with reference to notification No. 17867L.R., dated 23rd December 1936, sanctioning the establishment of the Ashujia Debt Settlement Board in the Netrakona subdivision of the Mymensingh district, I hereby order under section 4 of the Bengal Agricultural Debtors Act, 1935, that the said Board be dissolved.

H. R. WILKINSON, *Commissioner (offg.)*.

Faridpur, the 16th April 1937.

No. 3219J.—It is hereby notified for general information that, under section 13 of the Bengal Village Self-Government Act (Act V of 1919), M. Sahedali Sarder has been duly elected to be a member of the Senerchar union board in police-station Janjira in the Madaripur subdivision of the Faridpur district, *vice* Jonabali, deceased.

No. 3221J. It is hereby notified for general information that, under section 13 of the Bengal Village Self-Government Act (Act V of 1919), Munshi Mosleuddin Ahmed has been duly elected to be a member of the Nalmuri union board in police-station Gosairhat in the Madaripur subdivision of the Faridpur district, *vice* Munshi Kafiluddin Ahmed, removed

[ILLEGIBLE], for *District Magistrate.*

Barisal, the 16th April 1937

No. 2063J. — It is hereby notified for general information that, under sub-section (2) of section 6 of the Bengal Village Self-Government Act, 1919 (Bengal Act V of 1919), the following gentlemen have been duly elected to be members of the undermentioned union boards in police-stations noted above each in the Perojpur subdivision of the Bakarganj district:—

Kowkhali police-station.

Kowkhali union board.

Babu Ashutosh Das Munshi.
Babu Gopal Chandra Somaddar.
Hazi Abdul Hashem Khan.
Maulvi Md. Abdul Rashed.
Maulvi Tofel Uddin Ahmed.
Maulvi Makbul Ahmed Rari.

Swarupkati police-station.

Sohagdal-Kowrikhara union board.

Maulvi Adeluddin Ahmed.
Maulvi Md. Nowab Ali Mia.
Maulvi Md. Sarifulla Mia.
Maulvi Md. Azahar Uddin Ahmed.
Munshi Afazaddin Ahmed.
Munshi Abul Hossain Mia.

2. Under sub-section (3) of section 6 of the Act, the following gentlemen have been appointed by the District Magistrate of Bakarganj to be members of the said union boards:—

Kowkhali police-station.

Kowkhali union board.

Maulvi Mansur Ali Mahajan.
Dr. Abdul Karim.
Babu Keshab Chandra Bose.

Swarupkati police-station.

Sohagdal-Kowrikhara union board.

Dr. Moslem Ali Mia.
Babu Ramesh Chandra Das.
Babu Agni Kumar Somaddar.

A. MAJID, *Addl. District Magistrate.*

Mymensingh, the 9th April 1937

Maulvi Muhammad Abdul Jabbar Palwan, a candidate for election to the Bengal Legislative Council from the Mymensingh West Rural Muhammadan Constituency, lodged with me his return of election expenses and declarations on the 30th March 1937. They may be inspected in my office on payment of the prescribed fee of Re. 1 during office hours 11 a.m. to 5 p.m.

K. G. MORSHED, *Returning Officer (District Magistrate).*

Mymensingh, the 9th April 1937.

Babu Hem Chandra Chakrabarty, a candidate for election to the Bengal Legislative Assembly from the Mymensingh East Rural General Constituency, lodged with me his return of election expenses and declarations on the 5th April 1937. They may be inspected in my office on payment of the prescribed fee of Re. 1 during office hours 11 a.m. to 5 p.m.

K. G. MORSHED, *Returning Officer (District Magistrate).*

Mymensingh, the 9th April 1937.

Maulvi Mayezuddin Talukdar, a candidate for election to the Bengal Legislative Assembly from the Jamalpur-*cum*-Muktagacha Rural Muhammadan Constituency, lodged with me his return of election expenses and declarations on the 2nd April 1937. They may be inspected in my office on payment of the prescribed fee of Re. 1 during office hours 11 a.m. to 5 p.m.

K. G. MORSHED, *Returning Officer (District Magistrate).*

Mymensingh, the 9th April 1937.

Babu Ramratan Barman, a candidate for election to the Bengal Legislative Assembly from the Mymensingh West Rural General Constituency, lodged with me his return of election expenses and declarations on the 1st April 1937. They may be inspected in my office on payment of the prescribed fee of Re 1 during office hours 11 a.m. to 5 p.m.

K. G. MORSHED, *Returning Officer (District Magistrate).*

Mymensingh, the 9th April 1937.

Hafez Fazlur Rahman Ranbhawali, a candidate for election to the Bengal Legislative Assembly from the Mymensingh South Rural Muhammadan Constituency, lodged with me his return of election expenses and declarations on the 3rd April 1937. They may be inspected in my office on payment of the prescribed fee of Re. 1 during office hours 11 a.m. to 5 p.m.

B. P. BHATTACHARJEE, *Returning Officer (Subdivisional Magistrate).*

Mymensingh, the 9th April 1937.

Maulvi Waizuddin, a candidate for election to the Bengal Legislative Assembly from the Mymensingh West Rural Muhammadan Constituency, lodged with me his return of election expenses and declarations on the 5th April 1937. They may be inspected in my office on payment of the prescribed fee of Re. 1 during office hours 11 a.m. to 5 p.m.

B. P. BHATTACHARJEE, *Returning Officer (Subdivisional Magistrate).*

Notice under rule 9.

Jamalpur, the 15th April 1937.

Name of the constituency.	Name of the candidate.	Date of lodging return of expenses by the candidate.	Date of making declaration by the candidate and by his agent, if any.
Jamalpur North (Rural) Muhammadan.	Maulvi Kafiluddin Ahamed.	15th April 1937 ..	15th April 1937.

The abovementioned returns and declarations can be inspected in my office between 11 a.m. and 5 p.m. Any person shall, on payment of a fee of one rupee, be entitled to inspect any such return or declaration, and on payment of a fee of Rs. 2 for each copy, to obtain attested copies thereof or of any part thereof.

E. R. KITCHIN, *Returning Officer.*

Orders by the Deputy Inspector-General of Police, Dacca Range.

Dacca.—No. 1412.—8th April 1937.—Sub-Inspector Heramba Chandra Ghosh of Mymensingh is appointed to act as Court Inspector in that district, *vice* Rai Sahib Kshiti Nath Ghosh, Court Inspector, appointed to act as Deputy Superintendent.

Babu Nishitha Nath Banarji, officiating Court Inspector, Mymensingh, will continue to act as such, *vice* Babu Phani Bhushan Banarji, Inspector, officiating as Deputy Superintendent.

Maulvi Ashraf Ali, Inspector, Mymensingh, having returned to duty on the forenoon of the 10th March 1937, the unexpired portion of his leave is hereby cancelled.

F. W. KIDD,
Deputy Inspector-General of Police (offg.).

Presidency Division—Calcutta.

No. 670R.G.—12th April 1937.—Babu Tarapada Bhattacharji, Sub-Deputy Collector, Sealdah, 24-Parganas, is granted leave on average pay for thirteen days, under rule 81(*b*) (*ii*) of the Fundamental Rules, with effect from the 26th April 1937.

H. J. TWYNAM, *Commissioner.*

Calcutta, the 17th April 1937.

Notice under rule 19 (5) of the Council of State Electorate Rules and Regulations.

The undermentioned candidate for general election to the West Bengal Non-Muhammadan Constituency of the Council of State has lodged his return of election expenses and declaration on the date mentioned against his name.

Any person is, on payment of a fee of one rupee, entitled to inspect such return or declaration in the office of the Commissioner, Presidency Division, at 3, Charnock Place, Calcutta, during office hours:—

Name of candidate.	Date on which return was lodged with the Returning Officer.
Babu Satyendra Nath Sen	24th February 1937.

D. K. GHOSH, *Personal Assistant for Commissioner, Presidency Division.*

Calcutta, the 17th April 1937.

Notice under rule 9 of the Bengal Legislative Assembly and the Bengal Legislative Council Electoral (Election Expenses and Election Petitions) Rules, 1936, at page 139 of the Bengal Electoral Conduct of Election Rules.

The undermentioned duly elected candidate at the by-election to the Bengal Chamber of Commerce Constituency of the Bengal Legislative Assembly has lodged his return of election expenses and declaration on the date mentioned against his name.

Any person is, on payment of a fee of one rupee, entitled to inspect such return or declaration in the office of the Commissioner, Presidency Division, at 3, Charnock Place, Calcutta, during office hours and, on payment of a fee of Rs. 2 for each copy, to obtain attested copies thereof or of any part thereof:—

Name of candidate	Date on which return was lodged with the Returning Officer.
Mr. Michael Arthur Frederic Hirtzel.	7th April 1937.

D. K. GHOSH, *Personal Assistant for Commissioner (Returning Officer).*

Jessore, the 12th April 1937.

It is hereby notified for general information that, under section 13 of the Bengal Village Self-Government Act, 1919 (Bengal Act V of 1919), read with rule 35 of the rules for the election and appointment of members of union boards, Babu Gagon Mandal has been duly elected to be a member of Babukhali union board in the Magura subdivision of the district of Jessore, *vice* Babu Aswani Kumar Majumdar, resigned.

Jessore, the 16th April 1937.

It is hereby notified for general information that, under section 13 of the Bengal Village Self-Government Act, 1919 (Bengal Act V of 1919), read with rule 36 of the rules for the election and appointment of members of union boards, etc., Babu Ananta Kumar Saha has been appointed a member of the union board No. 11—Padmakar in Jhenida police-station in the Jhenida subdivision of the district of Jessore, *vice* Babu Sakti Charan Ghose, resigned.

P. D. MARTYN, *District Magistrate.*

Berhampore, the 15th April 1937.

It is hereby notified for general information that, under section 13 of the Bengal Village Self-Government Act, 1919 (Bengal Act V of 1919), read with rule 35 of the rules for the election and appointment of members of union boards, Babu Giruja Bhusan Mukhopadhyaya is declared to be a duly elected member of Satui-Chowrigachha union board in police-station Berhampore Town of Sadar subdivision in the district of Murshidabad, *vice* Babu Satkari Chattopadhyaya, resigned.

S. M. MITRA, for *District Magistrate.*

Khulna, the 15th April 1937.

It is hereby notified for general information that, under section 13 of the Bengal Village Self-Government Act, 1919 (Bengal Act V of 1919), read with rule 35 of the rules for the appointment and election of members of union boards, Maulvi Eman Ali Haldar of Jigirmolla, post office and police-station Rampal, has been duly elected to be a member of Perikhali union board within the jurisdiction of Rampal police-station in the Bagerhat subdivision of the Khulna district, *vice* Maulvi Emanali Izardar, resigned.

B. SARKAR, *District Magistrate.*

Krishnagar, the 16th April 1937.

No. 1345L.S.-G.—It is hereby notified for general information that, under section 13 of the Bengal Village Self-Government Act, 1919 (Bengal Act V of 1919), read with rule 36 of the rules for the election and appointment of members, etc., of union boards under the said Act, Babu Khirod Chandra Saha has been appointed by me to be a member of the Pragpur union board within Daulatpur police-station in the Kushtia subdivision of the Nadia district in place of Maulvi Tasiruddin Ahmed, deceased.

N. SEN, for *District Magistrate.*

Alipore, the 13th April 1937.

It is hereby notified for general information under rule 9 of the Bengal Legislative Assembly Electoral (Election Expenses and Election Petitions) Rules, 1936, that the candidates named below have filed their return of election expenses on the dates and in respect of the constituencies noted against their names :—

	Name of candidate.	Name of constituency of the Bengal Legislative Assembly.	Date on which the return of election expenses and declarations have been lodged.
1	Purnendu Sekhar Basu	24-Parganas Rural North-West General Constituency.	6th March 1937.
2	Basanta Kumar Mal	Ditto	10th April 1937.
3	Annada Prosad Nasker	Ditto	Ditto.
4	Profullah Kumar Guha	24-Parganas Municipal General Constituency.	9th April 1937.

The returns can be inspected on any working day between the hours of 11a.m. and 5 p.m. at District Magistrate's office, Alipore, by any person on payment of a fee of Re. 1 only.

H. GRAHAM, *District Magistrate and Returning Officer.*

Satkhira, the 9th April 1937.

It is hereby notified for general information that, under rule 9 of the Bengal Legislative Assembly and the Bengal Legislative Council Electoral (Election Expenses and Election Petitions) Rules, 1936, Hazi Neamuddin Ahmad, an unsuccessful candidate from the Satkhira Rural Muhammadan Constituency of the Bengal Legislative Assembly, has lodged with me his return of election expenses and declaration on the 31st March 1937 under rule 7 (4) of the aforesaid rules. They may be inspected in my office on payment of the prescribed fee of rupee one only, and attested copy of the same or any part thereof may be had on payment of a fee of Rs. 2 only between the hours of 11 a.m. and 5 p.m.

A. MEAH, *Returning Officer (Subdivisional Officer).*

Orders by the Deputy Inspector-General of Police, Presidency Range.

Calcutta.—No. 2176.—10th April 1937. — Babu Rasik Lal Chakrabatti, Inspector, 24-Parganas, is granted 4 months' leave on average pay, on medical certificate, in extension of the leave already granted to him.

The existing acting arrangement will continue.

Babu Upendra Lal Deb, officiating Court Inspector, Khulna, will continue to act as such in the vacancy caused by the retirement of Babu Harendra Kumar Ghosh, Inspector.

R. M. WRIGHT,

Deputy Inspector-General of Police.

Rajshahi Division—Jalpaiguri.

No. 3081 J.R.—10th April 1937.—It is hereby notified under rule 9 of the Bengal Legislative Council Electoral (Election Expenses and Election Petitions) Rules, 1936, that Khan Bahadur Maulvi Basiruddin Mohammad, a candidate duly nominated for the by-election to the Bengal Legislative Council from the Rajshahi-*cum*-Malda Muhammadan Rural Constituency, has lodged with the Returning Officer on the 9th April 1937 a return of his expenses supported by necessary declarations.

The return may be inspected in the office of the Commissioner, Rajshahi Division, Jalpaiguri, during office hours on payment of a fee of Re. 1 only, and attested copies or copies of any part thereof may be obtained from that office on payment of a fee of Rs. 2 only for each copy.

[ILLEGIBLE], for *Commissioner and Returning Officer.*

Malda, the 17th February 1937.

Under rule 32A of the Election Rules under the Local Self-Government Act, it is notified for general information that the 17th May 1937 has been fixed for the by-election of a member for the Malda local board from thana Kharba to fill up the vacancy caused by the removal of Rai Sahib Kamala Kanta Bagchi under section 18(*1*)(*c*) of the Local Self-Government Act.

B. R. SEN, *District Magistrate.*

Bogra, the 12th April 1937.

No. 2411J.—It is hereby notified for general information that, under sub-section (2) of section 6 of the Bengal Village Self-Government Act, 1919 (Bengal Act V of 1919), the following gentlemen have been duly elected to be members of the undermentioned union board in the district of Bogra:—

Kahaloo police-station.

Union No. IV—Narhatta.

Ward No. I.

Maulvi Azimuddin Ahmad.
Munshi Alamuddin Pramanik.

Ward No. II.

Munshi Rahimuddin Sarkar.
Munshi Yusufuddin Pramanik.

Ward No. III.

Maulvi Kudratuddin Ahmad.
Munshi Rasitulla Mandal.

No. 2412J.—It is hereby notified for general information that, under sub-section (3) of section 6 of the Bengal Village Self-Government Act, 1919 (Bengal Act V of 1919), the following gentlemen have been duly appointed to be members of the undermentioned union board in the district of Bogra:—

Kahaloo police-station.

Union No. IV—Narhatta.

Babu Surendra Nath Das.
Maulvi Latifuddin Taluqdar.
Babu Gangadhar Sarkar.

T. I. M. NURANNABI CHAUDHURI,
District Magistrate.

Kurigram, the 12th April 1937.

Under rule 9 of the Bengal Legislative Assembly and the Bengal Legislative Council Electoral (Election Expenses and Election Petitions) Rules, 1936, it is hereby notified for the information of all those concerned that the return of election expenses under rule 7 (2) of the aforesaid rules was filed before me on the 12th April 1937 by Maulvi Abdul Latif Ahammad, a candidate from the Kurigaon South (Rural) Muhammadan Constituency of the Bengal Legislative Assembly. The return has been received at 11 a.m. today, the 12th April 1937.

The return can be inspected on any working day between the hours of 11 a.m. and 5 p.m. at my office by any person on payment of a fee of Re. 1 only and attested copy of the return or any part thereof can be obtained on payment of a fee of Rs. 2 only.

A. K. BOSE, *Subdivisional Officer and Returning Officer.*

Orders by the Deputy Inspector-General of Police, Rajshahi Range.

Rajshahi.—No. 2550. — 9th April 1937. — The following posting and promotions are ordered with effect from the 16th January 1937:—

(1) Babu Amarendra Nath Mitra, Inspector, Rangpur (now employed in the Intelligence Branch), is posted to Malda, *vice* Maulvi Saiyid Quobad Husain, Court Inspector, Malda, retired.

(2) Maulvi Muhammad Yasin, officiating Court Inspector, Rangpur, is allowed to act, until further orders, in the permanent vacancy caused by the retirement of Maulvi Saiyid Quobad Husain, Inspector.

(3) Sub-Inspector Shamsher Ali Ahmad, of Malda, is appointed to act as Court Inspector, *vice* Babu Amarendra Nath Mitra, Inspector, temporarily attached to the Intelligence Branch.

H. C. HUNT,
Deputy Inspector-General of Police (offg.).

Registered No. C207

The Calcutta Gazette

THURSDAY, APRIL 22, 1937.

PART IA

Orders and Notifications by the Government of India republished for general information.

DEPARTMENT OF INDUSTRIES AND LABOUR.

CORRIGENDA.

New Delhi, the 29th March 1937.

No. L.-3050.—In the *Gazette of India* (Part I), dated the 27th March 1937:—

1. In the Hazardous Occupations (Lead) Rules, 1937, published with notification No. L.-3050, dated the 18th March 1937, on pages 627-30 of the Gazette—

(a) in sub-rule (2) of *rule 3 for* "appiled" *read* "applied";

(b) in *rule 8, for* the figures and word "*i* to *vi*" *read* "(*i*) to (*vi*)"; and

(c) in *rule 13* before the words "The Chief Inspector" *insert* the heading "*Exemptions*".

2. In *rule 1* of each of the following sets of rules, namely:—

(1) The Hazardous Occupations (Miscellaneous) Rules, 1937,

(2) The Hazardous Occupations (Aerated Waters) Rules, 1937,

(3) The Hazardous Occupations (Rubber) Rules, 1937,

(4) The Hazardous Occupations (Chromium) Rules, 1937,

(5) The Hazardous Occupations (Cellulose Spraying) Rules, 1937, and

(6) The Hazardous Occupations (Sand Blasting) Rules, 1937,

published respectively with notifications Nos. L.-3050 (1) to (6), dated the 27th March 1937, on pages 776-8 of the Gazette, *for* the words, figures and brackets—

"1. (*a*) *Title and application.*—" *read* "1. *Title and application.*—(*a*)".

NOTIFICATION.

CORRIGENDA.

New Delhi, the 29th March 1937.

No. S.-601.—In notification No. S.-601 published on pages 779—837 of the *Gazette of India*, Part I, dated the 27th March 1937:—

(1) on page 779, in the preamble to the rules, before the words "to make" *insert* the words "after previous publication";

(2) on page 799, in sub-rule (3) of rule 70, *for* "cretified" *read* "certified";

(3) on page 800, in sub-rule (5) of rule 74, *for* "sub-rule" *read* "sub-rules";

(4) on page 802, in sub-rule (3) of rule 76, *for* "live-wire" *read* "live wire".

NOTIFICATIONS.

New Delhi, the 28th March 1937.

No. L.-3070.—In pursuance of clause (e) of sub-section (2) of section 7 of the Payment of Wages Act, 1936 (IV of 1936), the Governor-General in Council is pleased to authorise the following as amenities and services for which deductions from the wages of persons employed by a railway administration may be made, namely:—

(i) use of Railway Institutes;
(ii) use of Railway Clubs;
(iii) use of Railway schools;
(iv) services rendered by Medical officers;
(v) supply of electric current;
(vi) supply of water; and
(vii) replacement of electric fittings and articles supplied in residential houses and quarters.

The 31st March 1937.

No. M -826 (1).—*Corrigendum.*—In notification No. M.-826 (6), dated the 23rd March 1937, promulgating the Petroleum Rules, 1937, published on pages 720-775 of the *Gazette of India*, Part I, dated the 27th March, 1937:—

(1) on page 721, for "CHAPTER I" above the heading "Importation of Petroleum" read "CHAPTER II";
(2) on page 726,—
(*a*) in sub-rule (1) of rule 34, omit the full-stop after the word "flat",
(*b*) in sub-rule (4) of rule 37, after the word and comma "bulk," insert the word "if";
(3) on page 738, in sub-rule (5) of rule 115, omit comma after "applied for";
(4) in Schedule III, on page 772,—
(i) in the 28th line for "29·22" read "29·92";
(ii) in the 30th line for "below 29·22" read "above 29·92"; and
(iii) in the 38th line omit full-stop after the word "degrees".

No. M -826 (2).—The Governor-General in Council is pleased to appoint the officers specified in the annexed Schedule as the officers to certify under rule 30 of the Petroleum Rules, 1937, ships or other vessels as suitable for the carriage of petroleum in bulk by water.

THE SCHEDULE.

* * * *

6. The Principal Engineer and Ship Surveyor, Mercantile Marine Department, Calcutta District.
7. The Second Engineer and Ship Surveyor, Mercantile Marine Department, Calcutta District.
8. The Third Engineer and Ship Surveyor, Mercantile Marine Department, Calcutta District.
9. The Fourth Engineer and Ship Surveyor, Mercantile Marine Department, Calcutta District.
10. The Fifth Engineer and Ship Surveyor, Mercantile Marine Department, Calcutta District.
11. The Ship Surveyor, Mercantile Marine Department, Calcutta District.
12. The Engineer and Ship Surveyor, Mercantile Marine Department, Chittagong.

* * * *

A. G. CLOW,
Secy. to the Govt. of India.

FINANCE DEPARTMENT (CENTRAL REVENUES).

NOTIFICATIONS.

CUSTOMS.

New Delhi, the 3rd April 1937.

No. 23.—In exercise of the powers conferred by section 19 of the Sea Customs Act, 1878 (VIII of 1878), the Governor-General in Council is pleased to prohibit the export of monkeys by sea or by land from British India during the period from the 1st of March to the 31st of October in each year.

No. 24.—In exercise of the powers conferred by section 23 of the Sea Customs Act, 1878 (VIII of 1878), the Governor-General in Council is pleased to direct that the following further amendment shall be made in the notification of the Government of India in the Finance Department (Central Revenues), No 33-Customs, dated the 22nd June 1935, relating to the exemption from customs duties or part thereof:—

In the said notification, in Schedule I—Import Duties, under the head "A. General", after entry No. 28-J., the following entry (which relates to Item No. 29 of the First Schedule to the Indian Tariff Act, 1934), shall be inserted, namely:—

"28-K	Cinematograph Films not exposed ..	So much of the duty as is in excess of 20 per cent *ad valorem* when the films are liable to a standard rate of duty and so much as is in excess of 10 per cent. *ad valorem* when they are liable to a preferential rate of duty"

W. W. NIND,
Joint Secy. to the Govt. of India.

DEPARTMENT OF COMMERCE.

NOTIFICATIONS.

TREATIES (I. E R.).

New Delhi, the 31st March 1937.

No. 303 (25)-Tr. (I E R.).—In pursuance of section 13 of the Indian Rubber Control Act, 1934 (XXVIII of 1934), the Governor-General in Council is pleased to declare that the permissible maximum net exports of dry rubber from British India, excluding Burma, for the third and fourth quarters of 1937 shall be 2,812½ tons for each quarter, and that the permissible maximum net exports of dry rubber from Burma for the same periods shall be 2,025 tons for each quarter.

TARIFFS.

New Delhi, the 1st April 1937.

No. 341-T (5)/37.—In exercise of the powers conferred by sub-section (1) of section 4 of the Indian Tariff Act, 1934 (XXXII of 1934), the Governor-General in Council is pleased to increase the duty chargeable under the First Schedule to the said Act on the articles specified in the annexed table to the extent set forth therein.

TABLE.

Article, with number of entry in the First Schedule under which chargeable.	Present rate of duty chargeable under the Indian Tariff Act.	Increased rate of duty.
1	2	3
48(1) Fabrics, not otherwise specified, containing more than 90 per cent. of artificial silk—		
(b) not of British manufacture ..	50 per cent *ad valorem* or 4 annas per square yard, whichever is higher	50 per cent. *ad valorem* or 5 annas per square yard, whichever is higher
48(5) Fabrics, not otherwise specified, containing not more than 10 per cent. silk but more than 10 per cent. and not more than 90 per cent artificial silk—		
(a) Containing 50 per cent or more cotton—		
(ii) not of British manufacture	50 per cent *ad valorem* or 3¼ annas per square yard, whichever is higher.	50 per cent. *ad valorem* or 4 annas per square yard, whichever is higher.
(b) containing no cotton or containing less than 50 per cent cotton—		
(ii) not of British manufacture	50 per cent. *ad valorem* or 4 annas per square yard, whichever is higher.	50 per cent. *ad valorem* or 5 annas per square yard, whichever is higher.

H DOW,

Secy. to the Govt of India.

Registered No. C207

The Calcutta Gazette

THURSDAY, APRIL 22, 1937.

PART IB

Educational Notices.

Presidency Division.

40-1A, Free School Street, Calcutta, the 10th April 1937.

CORRIGENDUM.

In the list of candidates who were awarded Middle Scholarships in 1936, published in the *Calcutta Gazette* on Thursday, the 24th December 1936, under the head "24-Parganas" and sub-head "Two scholarships reserved for Muhammadans"—

Read

1 Md. Abdur Rashid .. Narayanpur M. E. School .. Nawab Bahadur's Institution, Murshidabad.

for

1 Md. Abdur Rashed .. Narayanpur M. E. School .. Nawab Bahadur's Institution, Murshidabad.

P. BANERJEE,

for *Inspector of Schools, Presidency Division.*

University of Dacca.

Ramna, Dacca, the 22nd March 1937.

NOTIFICATION.

The Syllabuses of the Departments of Physics and Law for the session 1937-38 are published below for general information.

N. AHMAD, *Registrar.*

Syllabuses—Session 1937-38.

Faculty of Science.

DEPARTMENT OF PHYSICS.

B. Sc. (Ordinary) Degree Examination, 1939.

(First year course.)

I. (*a*) *Properties of Matter.*

Laws of motion; work, power and energy; units and dimensions of physical quantities; motion in straight and circular paths; frictions; elasticity; moments of intertia (simple cases only); gravitation; simple harmonic motion; pressure in liquids and gases; viscosity of fluids; specific gravities; capillary action.

(*b*) *Sound.*

Wave motion; production and propagation of sound; noises and musical notes and their characteristics; musical scale and intervals; interference, consonance and dissonance; vibrations of strings and air columns; resonance.

II. Heat.

Temperature and thermometers; expansion; calorimetry; change of state; properties of vapours; hygrometry; first law of thermo-dynamics; conduction, convection and radiation; elementary ideas of steam and other heat engines.

Laboratory work (*two periods of three hours each per week*).—The spherometer; specific gravities; Young's modulus; modulus of rigidity; simple pendulum and determination of "*g*"; atmospheric pressure and Boyle's law; surface-tension of water and mercury; velocity of sound; determination of pitch; the sonometer; Melde's experiments; expansion of solids, liquids and gases; determination of specific and latent heats; cooling; hygrometry.

(Second year course.)

III. Light.

Propagation of light; photometry; reflection and refraction; prisms, mirrors and lenses; the human eye and defects of vision; optical instruments; dispersion and aberration; velocity of light; polarisation and double refraction; elementary ideas of the wave-theory; reflection and refraction of plane waves from plane surface.

IV. Magnetism and Electricity (*two lectures per week*).

Fundamental ideas of magnetism; magnetic measurements; terrestrial magnetism; dip, declination; fundamental ideas and general theorems in electrostatics; capacity and condensers; electrical machines, electrometers; atmospheric electricity, primary and secondary cells; general effects of currents; currents and magnets; Ampere's hypothesis; aperiodic galvanometer; elementary principles of dynamos and motors; divided circuits; Ohm's law; electromotive force; resistance, Joule's law; thermo-electricity; electro-magnetic induction; induction coils; electrical units, electrolysis, radioactivity—elementary theory only; X-Rays, elementary theory.

Laboratory work.—The sextant; refraction through prisms; refractive indices; focal lengths of mirrors and lenses; magnifying powers; the spectrometer; law of inverse squares in the case of magnets; determination of "H"; lines of force, dip; verification of Ohm's law; the tangent galvanometer; comparison of resistances and electormotive forces; the potentiometer; Wheatstone's bridge, electro-chemical equivalents.

The final examination at the end of the 2nd year will consist of two theoretical papers of three hours each and one practical examination for six hours.

Paper I.

Part I. Properties of Matter and Sound.
Part II. Heat.

Paper II.

Part I. Light.
Part II. Magnetism and Electricity.

III. Practical Examination.

Text-books recommended:—

Watson. Text-book of Physics.
Ramsey. Geometrical Optics.
Wagstaff. Properties of Matter.
Catchpool. Sound.
Poynting and Thomson. Sound.
Edser. Heat for Advanced Students.
Houston. Intermediate Light.
Edser. Light.
Hadley. Electricity and Magnetism.
Hutchinson. Intermediate Text-books of Electricity and Magnetism.
Starling. Magnetism and Electricity.
Allen and Moore. Text-book of Practical Physics.
Datta. Text-book of Practical Physics.
Ganguly. Practical Physics.

HONOURS SCHOOL OF PHYSICS.

B. Sc. (Honours) Degree Examination, 1940.

I. Mechanics and Properties of Matter (two lectures per week).

Motion in straight and circular paths; laws of motion, work, power and energy; units and dimensions of physical quantities; collision and impact; rotatory motion; moments of inertia, simple harmonic motion and motion about a fixed axis; simple and compound pendulums; attractions; potential, gravitation; theory of elasticity; hydrostatics; liquids in motion; Bernoulli's theorem; discharge through an orifice; water-wheels, turbines, centrifugal pumps, surface-tension and capillarity; viscosity.

II. Heat (two lectures per week).

Temperature and thermometers; expansion; calorimetry; conduction and convection of heat; change of state; properties of vapours, hygrometry, kinetic theory of gases; the continuity of states; steam and heat-engines; diffusion of gases; theory of pumps.

III. Sound—(two lectures per week).

Wave motion; propagation of sound; noises and musical notes; musical scale; interference, transverse vibration of strings; longitudinal and torsional vibrations of bars; plane waves of sound; vibration of air-columns in pipes; resonance; analysis of vibrations; combination tones; consonance and dissonance; the ear and musical instruments.

Laboratory work (three periods of three hours each per week).—The balance; sensibility curve; calibration of weights; the cathetometer; density determination with corrections; determination of elastic constants; determination of "*g*" by simple and compound pendulums; surface-tensions; viscosity; moments of inertia, expansion of liquids; expansion of solids and liquids by weight thermometers; calibration of thermometer tubing; experiments on specific heat; steam calorimeter; hygrometry; vapour-density; conductivity; mechanical equivalent of heat.

IV. Light.

(*a*) *Geometrical Optics.*—Photometry; reflection and refraction; mirrors, prisms, lenses; Fermat's law; aberration; caustics; dispersion and achromatism; optical instruments; velocity of light.

(*b*) *Physical Optics.*—Wave theory; interference and diffraction; polarisation and double-refraction; spectroscopy; theories of dispersion and radiation.

V. Statical Electricity and Magnetism.

(*a*) *Statical Electricity.*—General phenomena and general theorems; potential and energy in electrified system; capacity; dielectrics and specific inductive capacity; atmospheric electricity.

(*b*) *Magnetism.*—General phenomena and general theorems; inverse square law; magnetic fields; induced magnetisation; magnetic properties of materials; magnetic susceptibility and permeability; para-, ferro-and diamagnetism; terrestrial magnetism; magnetism and light.

VI.—Thermodynamics and Radiation.

The laws of thermodynamics and their applications to various problems; equilibrium of systems; the phase rule; theory of the galvanic cells; thermo-electric phenomena; the Nernst heat-theorem; theory of radiation; Kirchhoff's law; theory of exchange; Stefan's law; Wien's displacement law; Planck's Radiation formula.

Laboratory work (three periods of three hours each per week).—

Light: Laws of geometrical optics; mirrors, prisms and lenses; optical bench; optical instruments; magnifying powers; the spectroscope and the spectrometer; bi-prisms; Newton's rings; polarimeter.

Sound: Velocity of sound; frequency of vibrations of strings; vibrations of air column.

Magnetism: Fundamental properties and laws; magnetometry; oscillations of a magnet in a magnetic field; the earth's magnetic field.

VII. Current Electricity (three lectures per week).

The electric current: Ohm's law; electromotive force and resistance; electrolysis; thermo-electricity; electro-magnetics; varying currents; alternating currents; units and dimensions; electro-magnetic radiation.

Electro-magnetic theory—fundamental equations; early experimental verifications; refraction in isotropic media; dispersion.

VIII. Modern Physics.

Gaseous conduction; the atomic nature of electricity; electron; determination of charge and mass; X-Ray, modes of production; flourescent and continuous radiations; works of Barkla, Mosley and Bragg; determination of characteristic wave length; radioactivity; elementary ideas of the Quantum Theory.

Laboratory work (five periods of three hours each per week).—

Current electricity; measurement of current, electromotive force and resistance; electrolysis; induced currents; comparison of capacities.

IX. Wireless.

Modes of generation and reception. Principles of wireless telephony.

Examinations.—Five papers of three hours each and a practical examination for 18 hours.

B. Sc. Honours.

Text-books recommended:—

Loney. Dynamics of a Particle and of Rigid Bodies.
Poynting and Thomson. (*1*) Properties of Matter, (*2*) Heat, (*3*) Sound, (*4*)Electricity and Magnetism, Parts I and II.
Newman and Searle. The General Properties of Matter.
R. N. Ghosh. Sound.
Saha and Srivastava. A Text-book of Heat.
Roberts. Heat and Thermodynamics.
Bloch. The Kinetic Theory of Gases.
Houston. Treatise on Light.
Preston. Theory of Light.
Hoare. Thermodynamics.
Wood. Physical Optics.
Heath. Elementary Treatise on Geometrical Optics.
J. J. Thomson. Mathematical Theory of Electricity and Magnetism.
Jeans. Mathematical Theory of Electricity and Magnetism.
Whetham. Theory of Experimental Electricity.
Starling. Electricity and Magnetism.
Crowther. Ions, Electrons and Ionising Radiations.
Millikan. The Electron.
Fajans. Radioactivity.

For reference:—

Loney. Elementary Treatise on Statics.
Barton. Text-book on Sound.
Richardson. Text-book of Sound.
Wood. Text-book of Sound.
Preston. Theory of Heat.
Planck. Treatise on Thermodynamics.
Ramsey. Elementary Geometrical Optics.
Southall. Mirrors, Prisms and Lenses.
Michelson. Light-Waves and Their Uses.
Michelson. Studies in Optics.
Lyman. Spectroscopy of the Extreme Ultra-Violet.
Debye. Polar Molecules.
Richtmyer. Introduction to Modern Physics.
G. P. Thomson. The Atom.
Hevesy and Paneth. Radioactivity.

For practical work the following books are recommended:—

Watson. Text-book of Practical Physics.
Allen and Moore. Practical Physics.
Worsnop and Flint. Advanced Practical Physics.

Physics for the M. Sc. Degree Examination, 1939.

Two years' course for Ordinary students.

Part I.—M.Sc. Course for 1938.

Light.—Physical Optics (same as for B.Sc. Honours); static and current electricity and magnetism (same as for B.Sc. Honours); radiation and thermodynamics (same as for B.Sc. Honours); gravitation, theory of elasticity, including theory of vibration; capillarity and viscosity of liquids and gases; kinetic theory of matter.

Part I.—M.Sc. Examination will consist of three theoretical papers and a two days' practical examination.

Paper I.—General Physics and Thermodynamics.

Paper II.—Physical Optics and Radiation.

Paper III.—Electricity and Magnetism.
Practical Examination for two days.

Part II.—M.Sc. Course for 1939.

Part II (by Examination).

Paper I.—Electro-magnetic Theory, Electron Theory, Classical Optics.

Paper II.—Quantum Theory including its application in X-Ray, Spectroscopy, Magnetism and Constitution of matter and general ideas about radio-activity.

Paper III.—One of the following subjects:—

(*a*) Wireless Telegraphy and Telephony.

(*b*) X-Ray and Crystallography.

(*c*) Relativity and wave mechanics.

Paper IV.—(100 marks) Practical Examination on the general subjects extending over two days.

Paper V.—(100 marks) Practical Examination on the special subject extending for two days.

Practical.

General subjects.

Measurement of Self Inductance and Mutual Inductance.
Lorentz's method of determining the absolute value of an Ohm.
Determination of e/m by a diode valve.
Characteristic curves of diodes and triodes.
Heterodyne method of determining K.
Lecher wire waves.
Spectrum Photography (ultra-violet and visible).
Michelson's Interferometer.
Dispersion of birefringence and rotation of the plane of polarisation of quartz.
Debye Scherrer photograph.

Practical.

Special subjects.

(I) *Wireless Telegraphy and Telephony.*

High frequency measurement of capacity, self and mutual inductance and Resistance.
Construction of damped and undamped Oscillatory Circuits—the measurement of wavelength.
Determination of decrement.
Generation of unmodulated waves.
Determination of wavelength by the heterodyne principles.
Determination of the constants of the aerial.
Generation of modulated waves.
Determination of the degree of modulation.
Reception of Wireless Waves: Construction of receiving sets
Determination of field strength.
Generation of ultra short waves and determination of wavelength by Lecher wires.
Simple experiments with Cathode Ray Oscillograph.

(II) *X-Rays and Crystallography.*

Setting up of a Hadding Tube.
Spectroscopy of X-Rays.
Absorption Spectroscopy of X-Rays.
Powder Photograph.
Laue Photograph.
Rotation Photograph.

(III) *Spectroscopy (For Group C).*

Photographic photometry.
(Intensity measurements and absorption measurements).
Concave Grating.
Zeeman Effect by Lummer Gehrke Plate.
Raman Effect.
Fabry and Perot Etalon—Fine structure of spectral lines.

Text-books recommended:—

Drude. Theory of Optics.
Richardson. The Electron Theory of Matter.
Lorentz. Theory of Electrons and its Applications.
Lorentz. Problems of Modern Physics.
Cunningham. Principles of Relativity.
Debye. Polar Molecules.
Haas. Introduction to Theoretical Physics. Vols. I and II.
Turner. Wireless.
Sommerfeld. Atomic Structure and Spectral Lines.
Newman. Recent Advances in Physics.
Ruark and Urey. Atoms, Molecules and Quanta.
Pauling and Goudsmit. The structure of Line Spectra.
Foote and Mohler. The Origin of Spectra.
Andrade. The Structure of the Atom.
Birtwistle. The New Quantum Mechanics.
Compton and Allison. X-Rays in Theory and Practice.
Siegbahn. Spectroscopy of X-Rays.
W. H. Bragg and W. L. Bragg. X-Rays and Crystal Structure.
Rutherford, Chadwick and Ellis. Radiations from Radioactive Substances.
Aston. Isotopes.
Stoner. Magnetism and Matter.
Stoner. Magnetism (Methuen's Monographs on Physics).
Haas. Wave Mechanics and the New Quantum Theory.
Darwin. The New Conceptions of Matter.

For reference:—

Molecular Spectra and Molecular Structure: Farad. Soc. Report
Rawlins and Taylor. Infra—Red Analysis of Molecular Structure.
Fowler. Report on the Series in Line Spectra.
Baly. Spectroscopy, Vols. I, II and III.
Heisenberg. The physical Principles of Quantum Theory.

Practical Physics.

Watson. Text-book of Practical Physics.
Worsnop and Flint. Advanced Practical Physics.
Hoag. Electron Physics.
Gray. Absolute Measurements in Electricity and Magnetism, Vols. I and II.

DEPARTMENT OF LAW.

Preliminary Examination in Law.

The Preliminary Law Examinations to be held after January 1937 shall embrace the following five papers, all of which shall be compulsory.

Each paper is of four hours' duration and carries 100 marks. No candidate is allowed to pass who does not obtain 50 per cent. of the aggregate marks with a minimum of 30 per cent. in each paper; and in order to secure a first class, a candidate must obtain 66 per cent. of the aggregate marks.

No student is allowed to take his Preliminary Examination earlier than at the second examination held during his second year course. (See Chapter XIX of the Ordinances and Regulations for fuller information.)

Candidates should possess a general knowledge of the Leading Cases specified and make a special study of those marked with an asterisk.

I.—JURISPRUDENCE (ONE PAPER).

A.—Jurisprudence (Theoretical).

Methods of Legal Study. The meaning of Jurisprudence.

Jurisprudence and allied sciences.

The Nature of Law. Definition of Law according to the Analytical School. Criticism. Sources of Law. Classification of Law.

The conception of Legal Rights and Duties. Analysis of Right. Person. Things. Facts. Acts. Negligence. Juristic Act. Ignorance of Law.

Classification of Rights. (1) Private and Public; (2) Normal and Abnormal; (3) Antecedent and Remedial; (4) *In rem* and *in personam;* (5) *Ex contractu* and *ex lege.*

Normal Antecedent Rights *in rem*—(1) Rights relating to the protection and freedom of action of the person; (2) Rights relating to family; (3) Right to reputation; (4) Rights to advantages open to the community generally; (5) Rights to immunity from damage by fraud;

(6) Rights to property; Ownership—Possession— *Jura in re aliena.*

Normal Antecedent Rights *in personam.* Contract.

Classification of Contracts. Antecedent rights *ex lege.*

Normal Remedial Rights. Torts. Classification of Torts. Extinction of Remedial Rights.

Abnormal Rights. Causes of abnormality in natural persons. Artificial persons.

Adjective Law; its importance and scope. Abnormal Adjective Law.

Public Law—(1) Constitutional Law; (2) Administrative Law; (3) Criminal Law; (4) The Law of the State as a juristic person.

International Law; its nature. Private International Law or Conflict of Laws.

Books recommended:—

Holland. Jurisprudence.
Pollock. First book of jurisprudence.

Book of reference—

Salmond. Jurisprudence.

B.—Jurisprudence (Historical).

Nature and scope of Historical Jurisprudence. Sources of information—Origin and growth of Law—History of the Law of Nature—Ancient social organisations—Family and Kindred—Evolution of Marriage—Evolution of Sonship—Early history of Property—Early history of the Law of Intestate and Testamentary Succession—Early history of Contract—Early history of Delict and Crime—History of Judicial Procedure and the Law of Evidence.

Books recommended:—

Maine. Ancient Law.
•Dr. Sen Gupta. Evolution of Law.

Book of reference—

Kocourek and Wigmore. Primitive and Ancient Legal Institutions, Chapters X, XII, XV, XXI and XXVII.
Vinogradoff. Historical Jurisprudence, Vol. I.
Russell and Suhrawardy. Muslim Law; Historical Introduction to the Law of Inheritance.

II.—ROMAN LAW (ONE PAPER).

Political and Social institutions during the three periods of Roman history—Sources of Roman Law. Classification of Roman Private Law.
The Law of Persons.—The status of citizens and aliens, of freemen and slaves. Father's powers (*Patria potestas*). Tutors and Curators. Juristic person.
The Law of Property. Classification of Things. Ownership. Acquisition of ownership; original and derivative. *Jura in re aliena*. Possession. Possessory Interdicts.
The Law of Succession. The character of Roman succession. Classification of heirs. Intestate succession. Testamentary succession. Legacies. *Fidei Commissa*.
The Law of Obligations. Character and sources of obligations. Classification of Roman Contracts. Pacts. Quasi-contracts. Delicts. Quasi-delicts.
The Law of Procedure. The *Legis Actiones*. The Formulary Procedure. The Extraordinary Procedure.

Books recommended:—

Leage. Roman Private Law.
Girard. History of Roman Law.
S. C. Bagchi. Roman Private Law.

Books of reference—

Sohm. Institutes, Book I, Chapter I; Book II, Chapter I, sections 46-57; Chapter II; Chapter III; Book III, Chapter II.
Walton. Historical Introduction to Roman Law.
Justinian. Institutes (Translation by Moyle).

III.—HINDU LAW (ONE PAPER).

Special features of Hindu Jurisprudence—Application of Hindu Law—Effect of conversion—Sources of Hindu Law—Schools of Hindu Law—Effect of migration—Hindu Law personal, not territorial—Mitakshara and Dayabhaga Schools: Fundamental differences—Marriage—Sonship—Adoption—Joint family system and Joint property—Mitakshara joint family—Coparcenary property: right by birth: legal position of *Karta*—Separate property—Gains of Science—Debts—Ancestor's debts, pious obligation to pay—Gifts—Alienations—Legal Necessity—Partition—Impartible estates.
General principles of inheritance—Inheritance to males—Mitakshara School and Dayabhaga School—Exclusion from inheritance.
Woman's Estate—Stridhan—Qualified woman's estate—Reversioners—Testamentary Succession—Wills—Maintenance—Religious and Charitable endowments.

Leading Cases—

*1. The Collector of Madura *versus* Mootooramlinga, 12 M. I. A. 397.
2. Gurugobinda *versus* Anandalal, 5 B. L. R. 15.
*3. Manikyamala *versus* Nandakumar I. L. R. 33 Cal. 1306, 11 C. W. N. 12.
*4. Sri Balusu *versus* Sri Balusu, I. L. R. 22 Mad. 398, L. R. 26 I. A. 113.
5. Bhagwan Sing *versus* Bhagwan Sing, L. R. 26 I. A. 153.
6. Perrazu *versus* Subbarayadu, L. R. 48 I. A. 280, I. L. R. 44 Mad. 656.
*7. Hanuman Pershad *versus* Babooi Munraj, 6 M. I. A. 393, 18 W. R. 81.

*8. Rangaswami *versus* Nachiappa, 29 C. L. J. 539, L. R. 46 I. A. 72, I. L. R. 42 Mad. 523, 23 C. W. N. 777.
*9. Suraj Bansi *versus* Sheoprosad, L. R. 6 I. A. 88, I. L. R. 5 Cal. 148.
*10. Brijnarain *versus* Manglaprosad, 28 C. W. N. 253, L. R. 51 I. A. 129, I. L. R. 46 All. 95.
11. Hiralal *versus* Tripura, I. L. R. 40 Cal. 615, C. W. N. 679.
12. Rajaninath *versus* Nitaichand, 32 C. L. J. 333, 25 C. W. N. 433, F. B.
*13. Tagore *versus* Tagore, 18 W. R. 359 P. C., 9 B. L. R. 377.
14. Bhupatinath *versus* Ramlal, I. L. R. 37 Cal. 128, 14 C. W. N. 18.
15. Balwant Rao *versus* Baiji Rao, L. R. 47 I. A. 213, I. L. R. 48 Cal. 30.
16. Baijnath *versus* Tejbali Singh, 48 I. A. 195, 43 All. 228.
*17. Monohar Mukerji *versus* Bhupendra, 56 C. L. J. 468, 37 C. W. N. 29 (F. B.).
18. Shyamacharan Chattopadhyaya *versus* Sricharan Chattopadhya, 56 Cal. 1135.
19. Haridas Chatterjee *versus* Manmatho Nath Mallik, 41 C. W. N. 322.

Books recommended:—

G. C. Sastri. Hindu Law.
Mayne. Hinidu Law.
Mulla. Hindu Law.

Books of reference—

Bhattacharyya. Hindu Law.
Mandlik. Hindu Law.
J. C. Ghose. Hindu Law.
P. N. Sen. Hindu Jurisprudence.

IV.—MUHAMMADAN LAW AND LAW OF PERSONS.

A.—Muhammadan Law.

Conception of Law in Muhammadan Jurisprudence and its distinctive characteristics. Customs and usages of the Pre-Islamic Arabs and their influence on Muhammadan Law. Sources of divine legislation. The Koran. The Hadis. The origin and development of the different Schools of Law. The introduction and application of Muhammadan Law in Hindustan during Muhammadan rule. Muhammadan Law under British rule in India. The conflict of Muhammadan Law with other laws. Marriage. Dower. Divorce. Parentage. Guardianship. Maintenance. Administration. Inheritance. Will. Gift. Wakf. Pre-emption (Shia and Sunni).

Leading Cases—

1. Hamir Singh *versus* Lakia (1875), 1 All., p. 57 (F. B.).
*2. Ashrafoodowla *versus* Hyder Hussain, 11 M. I. A. 94.
3. Azibullakh Khan *versus* Ahmed Ali Khan, I. L. R. 7 All. 353.
*4. Abdul Fatah Md. Ishak *versus* Rasamy Dhar Choudhury (1895), 22 Cal. 619, 22 I. A. 76.
5. Nawab Amjad Ali *versus* Mohumdee Begum (1867), 11 M. I. A 517.
6. Hasarat Bibi *versus* Golam Jaffar (1898), 3 C. W. N. 57.
7. Nimai Chand *versus* Golam Husein (1909), 37 Cal. 179.
8. Abdul Rezak *versus* Aga Mohammed Jaffar Bindanin, 21 Cal. 666, L. R. 21 I. A. 56.
9. Imambandi *versus* Hazi Mutsaddi, L. R. 45 I. A. 73.
*10. Kulsum Bibi *versus* G. H. L. Ariff, 10 C. W. N. 449.
*11. Jadu Lal *versus* Janki Koer, 39 Cal. 915, L. R. 39 I. A. 101.
*12. Govinda Doyal *versus* Inayatulla, 7 All. 775 (F. B.).
*13. Sadik Hussein *versus* Hashim Ali (1916), L. R. 43 I. A. 212 38 All. 627.

Books recommended:—

Abdur Rahim. Muhammadan Jurisprudence, Pages 1 to 192.
Mullah. Muhammadan Law.
Ameer Ali. Student's Handbook of Muhammadan Law.

Book of refeerence—

Ameer Ali. Muhammadan Law.
Wilson. Anglo-Muhammadan Law.
Baillie. Digest of Muhammadan Law.
Tyabji. Principles of Muhammadan Law.

B.—Law of Persons.

Law of Persons distinguished from Law of Things. Personal privileges of the Sovereign. Irresponsibility. Nature and scope of Petition of Right. Responsibility of agents and servants of the Sovereign. Legal responsibility of the Government of India. Prerogatives of the Crown. Immunities of Foreign Sovereigns and their ambassadors. The tie of allegiance between Sovereign and subject. Natural-born and Naturalized subjects. Alien friends. Alien enemies. Natural and local allegiance. Domicile. Husband and wife. Parent and child. Guardian and Ward. Master and Servant. Personal laws as distinguished from territorial laws. System of personal laws prevailing in India. Change of personal law. Effect of election, migration, conversion and change of domicile.

Leading Cases:—

1. Udny *versus* Udny, L. R. H. L. Sc. 441.
*2. Skinner *versus* Orde, L. R. 4 P. C. 60, 40 M. I. A. 309, 10 B. L. R. 125.
3. Abraham *versus* Abraham, 9 M. I. A. 195.
*4. Khunilal *versus* Koer Gobind, L. R. 38 I. A. 87, I. L. R. 23 All. 356, 15 C. W. N. 545.
*5. Besant *versus* Narayaniah, L. R. 41 I. A. 314, I. L. R. 38 Mad. 807, 18 C. W. N. 1089.
*6. R. *versus* Lynch (1903), 1 K. B. 444.

Books recommended:—

Campbell. Principles of English Common Law, Chapters IV, V, VIII, XII-XV.
Indian Majority Act.
Guardians and Wards Act.
Eversley. Domestic Relations.

V.—CONSTITUTIONAL LAW AND HISTORY OF ENGLISH LAW (ONE PAPER).

A.—Constitutional Law.

English Constitutional Law. Historical outline. Leading characteristics. Relation between Laws and Conventions of the constitution. Parliamentary Sovereignty; its evolution and present position. Non-sovereign Legislatures. Federation. Relative positions and powers of the Legislature, Judiciary and Executive in England, the United States and France; contrasting effect upon the Rule of Law. The English Rule of Law compared with the *Droit administratif* of France; their varying effect upon the powers of the State and the rights of the Individual. Liberties of the subject. Personal freedom. Freedom of Discussion. Right of assemblage. Martial and Military Law. Power of the Purse. Official and Ministerial responsibility. Relation of Parliamentary Sovereignty to the Rule of Law.

British Indian Constitution. Course of its development and present composition: The Legislatures, Executive Governments, Courts and the services, etc.

Leading Cases:—

1. Stockdale *versus* Hansard, 9 Ad. and E., 1.
*2. Beatty *versus* Gillbanks, L. R., 9 Q. B. D., 308.
3. Wise *versus* Dunning (1902), 1 K. B., 167.
4. Wolfe Tone's case, 27 St. Tr., 614.
*5. *Ex parte* Marais (1902), A. C. 109.

6. Dunn *versus* Queen (1896), 1 Q. B., 116.
*7. R. *versus* Burah, I. L. R. 4 Cal. 172.
8. *In re* Madhava Singh, 8 C. W. N. 841, L. R. 31 I. A. 239.
*9. Secretary of State *versus* Momen, I. L. R. 40 Cal. 391, L. R. 40 I. A. 48, 17 C. W. N. 169.
10. Besant *versus* Advocate-General of Madras, L. R. 46 I. A. 176, 23 C. W. N. 986.
*11. Bugga *versus* King-Emperor, L. R. 47 I. A. 128, 24 C. W. N. 650.
*12. Satischandra Das *versus* Secretary of State, I. L. R. 54 Cal. 44.
13. Hemchand Devchand *versus* Azam Sakarlal, I. L. R. 33 Cal. 219, 10 C. W. N. 361, L. R. 33 I. A. 1.

Books recommended:—

Dicey. Law of the Constitution.
Cowell's Tagore Law Lectures, 6th Edition, Chapters 1-6, 10, and the History of the High Courts in Chapter 11.
Montague. Elements of English Constitutional History.
Maitland. History of the English Constitution.
Ghose. Comparative Administrative Law, Lectures I, V, XII and XVIII, pp. 449-460.
Anson. Law and Custom of the Constitution.
Sarvadhikari. English Constitutional Law.
Thomas. Leading Cases in Constitutional Law.
Government of India Act, 1935.

B.—English Legal History.

English Legal History. Anglo-Saxon Law and Legal institutions. Effects thereon of the Norman Conquest. Feudalism. Growth of Royal Justice and by its means of the English Common Law. Effect thereof on English Private and Public Law. History of the Jury System. Debt of Roman Law. Canon Law and Ecclesiastic Jurisdiction. Growth of Chancery and the development of Equity jurisdiction. The Court of Star Chamber and its importance in English Legal History. The Legal Profession. History of Legislation in England. Evolution of Parliamentary Omnicompetence in Legislation. Legal Reforms of the Nineteenth Century. Amalgamation of Courts, Jurisdictions and Procedure by the Judicature Acts. Jurisdiction and Powers of the Judicial Committees of the House of Lords and the Privy Council; genesis and present position.

Books recommended:—

Maitland and Montague. History of English Law.
Holdsworth. History of English Law.
Jenks. Short History of English Law.

Final Examination in Law.

The Final Examinations in Law to be held after July 1936 shall embrace the following six papers all of which shall be compulsory.

Each paper is of four hours' duration and carries 100 marks. No candidate is allowed to pass who does not obtain 50 per cent. of the aggregate marks with a minimum of 30 per cent. in each paper; and in order to secure a first class, a candidate must obtain 66 per cent. of the aggregate marks.

Candidates for the B. L. Examinations should possess a general knowledge of the Leading Cases specified and make a special study of those marked with an asterisk.

I.—LAW OF CONTRACT AND TORTS (ONE PAPER).

A.—Contract.

Contract. The general principles of the English and Indian Law of Contract. The meaning of Contract. Elements of valid Contract: —(1) Offer and Acceptance. (2) Form and consideration. (3) Capacity of Parties and Genuineness of consent. Effect of Mistake, Misrepresentation, Fraud, Coercion and Undue Influence on contract—Frustration. (4) Legality of object. The operation and the interpretation of contract. (5) Discharge of contract.

Some specific classes of Contract. Sale of goods. Bailment. Agency. Partnership.

Remedies. Specific performance. Injunction. Damages. Measure of damages.

Leading Cases—

*1. Khwaja Muhammad Khan *versus* Husaini Begum, 32 All. 410, L. R. 37 I. A. 152, 14 C. W. N. 865.
*2. Mohori Bibee *versus* Dhurmodas Ghose, I. L. R. 30 Cal. 639, L. R. 30 I. A. 114, 7 C. W. N. 441.
*3. Seth Kanhayalal *versus* National Bank of India, L. R. 40 I. A. 56.
*4. Smith *versus* Hughes, L. R. 6 Q. B. 597.
*5. Shaikh Kalu *versus* Ramsaran, 9 C. L. J. 216.
6. Cundy *versus* Lindsay, L. R. 3 A. C. 459.
7. Keighly. Moxted & Co. *versus* Durant (1901), A. C. 240.

Books recommended:—

Anson. Law of Contract.
Indian Contract Act. Indian Sale of Goods Act, III of 1930, and Indian Partnership Act of 1932.
Pollock. Principles of Contract.
Kenny. Cases on Contract.
W. G. H. Cook. Elements of the Law of Contract.

B.—Torts.

Tort, nature of. Conditions of liability. Absolute Liability. *Mens rea.* Negligence. Exemptions. Immunities. Joint wrongdoers. Vicarious Liability. Devolution of right and liability. Trespass Dispossession. Nuisance. Injuries to servitudes. Conversion and other injuries to Chattels. Injuries to Person. Injuries to Domestic Relations. Defamation. Intimidation. Deceit and Injurious Falsehood. Liability for Dangerous Property. Wrongful Process of Law. Inducing breaches of contract and allied torts. Remedies. Specific Restitution. Injunction and Damages. Remoteness of damages.

Leading Cases—

*1. Ashby *versus* White, 1 Sm. L. C. 231.
*2. Gaekwar of Baroda *versus* Gandhi, I. L. R. 27 Bom. 344, 30 I. A. 60, 7 C. W. N. 393.
*3. Derry *versus* Peek, L. R. 14, A. C. 337.
*4. St. Helens Colliery Co., Ltd., *versus* Hewitson, L. R. 1924 A. C. 59.
*5. Moghul Steamship Co. *versus* McGregor (1892), A. C. 25.
6. Smith *versus* Baker (1891), A. C. 325.
7. Hadley *versus* Baxendale, Exch. 241, 96 L. R. 742.
8. Canadian *Pacific* Railway *versus* Roy (1902), A. C. 220.
9. Armoury *versus* Delamirie, 1 Strange 505.

Books recommended:—

Salmond. Law of Torts.
Pollock. Law of Torts.
Kenny. Cases on Torts.

II.—THE LAW OF REAL PROPERTY, EQUITY AND TRUSTS (ONE PAPER).

English Law of Real Property. General ideas underlying the scheme of English land tenure; historical origins. Corporeal Hereditaments. Legal Estates in Land. Joint tenancy and tenancy-in-common. Equitable estates. Reversion. Remainder, vested and contingent. Executory interests. Remoteness of limitation. Common varieties of incorporeal hereditaments. Term of years. Mortgage of land.

N. B.—English Law of Real Property is to be studied in so far only as it is necessary to account for and explain the rules and principles thereof which have been adopted and applied in British India by Courts of Law and the Legislature.

Trusts. History. Express trusts. Creation of trusts. Rights and powers of trustees. Duties, liabilities and disabilities of trustees. Remedies for Breach of Trust. Limitation. Rights and liabilities of beneficiaries. Determination of Trusts and Trustee-ship. Obligation in the nature of trusts. Resulting and constructive trusts. Benami Transactions. Presumption of advancement.

Equity. Leading applications of English equitable principles in Indian Law and Practice. Tenancy by equitable estoppel. Subrogation of mortgages. Law against clogging the equity of redemption. Equitable doctrine of Part-performance. Fraudulent *benami* transfers. Contracts to assign *spes successionis.* Specific Performance. Injunction.

Leading Cases—

*1. Gopee Kristo *versus* Gunga Pershad, 6 M. I. A. 53.
2. Fox *versus* Mackreth, 2 Whi and T. L. C. 709.
3. *In re* Hallet's Trust, 12 Ch. D. 696.
*4. Cowasji *versus* Pochkhanawalla, I. L. R. 20 Bom. 511.
*5. Gurnarayan *versus* Sheolal Singh, I. L. R. 46 Cal. 566, 23 C. W. N. 521, L. R. 46 I. A. 1.
*6. Beniram *versus* Kundan Lal, I. L. R. 21 All. 496, L. R. 26 I. A. 58.
*7. Goculdas *versus* Puran Mal, I. L. R. 10 Cal. 1035, L. R. 11 I. A. 126.
8. Gurdeo *versus* Chandrika, I. L. R. 36 Cal. 193.
9. Noakes & Co., Ltd., *versus* Rice (1902), A. C. 24.
10. Mahomed Musa *versus* Aghore Kumar, L. R. 42, I. A. 1, I. L. R. 42 Cal. 801, 19 C. W. N. 250.
*11. Petherpermal *versus* Muniandi, I. L. R. 35 Cal. 551, 12 C. W. N. 562, L. R. 35 I. A. 98.
12. Tailby *versus* Official Receiver, 13 App. Cas. 523.
*13. Annadamohan Ray *versus* Gour Mohan Mullick, I. L. R. 50 Cal. 929, 28 C. W. N. 713, L. R. 50 I. A. 239.

Books recommended:—

Williams. Real Property.
Topham. Real Property.
Maitland. Equity, Lectures I-IV, VI, IX-XIII, XIX-XXI.
Dr. S. C. Bagchi. Principles of Equity.
Snell. Principles of Equity for Indian Students. By Dr. S. C. Bagchi—Chapters I to IV.
Indian Trusts Act.
Transfer of Property Act, Sections 53A, 60, 92.

III.—LAW OF TRANSFER AND SUCCESSION.

A.—Transfer.

Transfer of Property *inter vivos.* Classification of Property: (*a*) Movable; (*b*) Immovable; (*c*) Actionable claims. General rules governing the transfer of movable and immovable property. What cannot be transferred. Valid and invalid limitations and conditions of transfer. Election. Operation of transfer. Apportionment of rights and obligations upon transfer. General rules governing transfer of immovables. Effect of transfer by persons not fully qualified. Priority of rights created by transfer. Rent *bona fide* paid to holder under defective title and improvements made by *bona fide* holder under defective titles. *Lispendens.* Fraudulent transfers.

Sales of Immovable property. Mortgages of Immovable property and Charges. Leases of Immovable property. Exchanges. Gifts. Transfers of actionable claims. Registration of documents: Compulsory and optional Registration Effects of Registration and Non-Registration.

Leading Cases:—

*1. London & S. W. Railway Co. *versus* Gomm, 20 Ch. D. 562.
2. South Eastern Railway Co. *versus* Associated Portland Cement Manuf. (1910), 1 Ch. 28.
*3. Bellamy *versus* Sabine. 1 Deg and J. 566.
*4. Hakimlal *versus* Mushahar Shahu, I. L. R. 34 Cal. 999.
5. Imperial Bank of India *versus* U. Rai Gyaw Thu & Co., I. L. R. 51 Cal. 86, 28 C. W. N. 470, L. R. 50 I. A. 283.
6. Lal Achalram *versus* Kazim Hossain, I. L. R. 27 All. 271, L. R. 32 I. A. 113.
*7. Mahamaya *versus* Haridas Halder, I. L. R. 42 Cal. 455, 19 C. W. N. 208.

Books recommended:—

Transfer of Property Act.
Hindu Disposition of Property Act, XV of 1916.
•Registration Act, Sections 2, 17, 18, 48, 49, 50.
Ghose. Mortgage. Volume I.

B.—Succession.

Law of Succession (Statutory). Scheme and application of the Succession Act. Effect of domicile and marriage. Intestate succession. Testamentary succession. Wills and Codicils. *General* rules of Construction of Wills. Lapsing of legacies. Void bequests. Modes and conditions of valid testamentary disposition. Specific and demonstrative legacies. Ademption of legacies. *Donatio mortis causa.* Representative title. Grant and revocation of Probates and Letters of Administration. Executor *de son tort.* Powers, duties and liabilities of Executors and Administrators. Abatement of legacies. Succession certificates. Hindu Disposition of Property Act. Protection of Property of the Deceased.

Leading Cases:—

*1. Bagabati Barmania *versus* Kalicharan Singh, L. R. 38 I. A. 54, I. L. R. 38 Cal. 468; 15 C. W. N. 393.
2. Narendra Nath Sarkar *versus* Kamal Basini, I. L. R. 23 Cal 563; L. R. 23 I. A. 18.
3. Bai Motivahoo *versus* Mamubai, I. L. R. 21 Bom. 709, L. R. 24 I. A. 93.
*4. Mirza Karratulain *versus* Nawab Nuzhar-ud-Dowla, L. R. 32 I. A. 244, I. L. R. 33 Cal. 116.
*5. Bhupendra Krishna Ghosh *versus* Amarendra Nath Dey, 20 C. W. N. 169, I. L. R. 43 Cal. 432, L. R. 43 I. A. 12.
6. Subramanian Pillai *versus* Murugesa Pillai, 17 C. W. N. 488 P. C.
*7. Soundara Rajan *versus* Natarajan, 30 C. W. N. 434; I. L. R. 48 Mad. 906, L. R. 52 I. A. 310.
*8. Jones *versus* Administrator-General of Bengal, I. L. R. 46 Cal. 485.

Books recommended:—

Indian Succession Act, sections 1-28, 29-49 (excluding details of the order of succession), 57 (with Schedule III), 58-74, 80-82, 84-85, 87-90, 95, 97, 102-153, 177-179, 191-195, 208-217, 220-236, 261-312, 316-337, 368-389, 391.
Hindu Disposition of Property Act.

IV.—LAND LAWS OF BENGAL (ONE PAPER).

A.—History of Land Law—(*a*) Hindu theory of property in land. Rights of the Crown. Village Communities. Main features of the Hindu land system.

(*b*) Mahomedan theory of property in Land. Revenue system during the Moghul period.

(*c*) Grant of Diwani. Proprietary right of the East India Company. Bengal Zemindars. Growth of their rights and power. Zemindary tenures. Taluks, their general incidents.

B.—Revenue Law—(*a*) Law relating to Permanent Settlement. Regulations I and VIII of 1793. Main idea of Lord Cornwallis in effecting Permanent Settlement. Benefits anticipated from the Permanent Settlement; its defects.

(*b*) Law relating to Revenue-free lands. Origin and History of revenue-free grants in Hindu and Mahomedan times. Policy of the East India Company as to those lakhraj grants. Badshahi and non-badshahi grants; their classification.

(*c*) Law relating to under-tenures.

Dependent taluks created after Permanent Settlement. Patni taluks; their incidents.

(*d*) Law relating to sale for arrears of revenue. Short history of sale-laws previous to Act XI of 1859. Instalments of revenue under Act XI. Sale notification. Notices under sections 5 and 6. Separate accounts. Appeals before Commissioner. Suits regarding revenue sales. Rights of purchaser at revenue sales. Common and special registry.

(c) Law relating to Alluvion and Diluvion. English law on the subject. Regulation XI of 1825. Gradual accession; who are entitled to it. Ownership of islands. *Churs* in public navigable rivers and small and shallow rivers. Reformation *in situ*. Fishery rights.

C.—Law relating to Landlord and Tenant. Bengal Tenancy Act. Act VIII of 1885 as amended to date. Short history of tenancy laws from the Permanent Settlement up to the passing of Act VIII of 1885. Local Extent. Definitions. Classes of tenants. Tenureholders and the incidents of their holdings. Raiyats at fixed rates. Provisions as to transfer of tenures and holdings. Settled raiyats and Occupancy raiyats. Incidents of their tenancy. Enhancement and reduction of rents. Non-occupancy raiyats. Under-raiyats. Rules and presumptions as to rent. Alteration of rent on alteration of area. Payment of rent. Deposit of rent. Arrears of rent. Illegal cesses. Improvement by raiyats and landlords. Acquisition of land for building and other purposes. Surrender and abandonment. Subdivision of tenancy. Ejectment. Common Manager. Record-of-rights and settlement of rents. Decision of disputes. Judicial procedure in rent-suits. Sale for arrears under decree. Contract and Custom. Limitation in suits, appeals and applications.

D.—Law relating to Prescription and Easement. Prescription. Definition of easements. Affirmative and negative easements. Apparent and non-apparent easements. Easements of light, air and water. Public and private ways. Modes of origination. Express and implied grant. Easements of necessity. Acquisition of right in easements.

Leading Cases—

*1. Hurryhar Mukhopadhaya *versus* Madhab Chandra Baboo, 14 M. I. A. 152.
*2. Lopez *versus* Madan Mohan Thakur, 13 M. I. A. 467.
*3. Maharani Rajroop Koer *versus* Abdul Hossein, I. L. R. 6 Cal. 394; L. R. 7 I. A. 240.
4. Mohes Narain *versus* Nowbutt, I. L. R. 32 Cal. 397.
5. Sham Koondu *versus* Brojanath 21 W. R. 94.
6. Sonet Koer *versus* Himmath, I. L. R. 1 Cal. 391.
*7. Watson *versus* Ramchand, I. L. R. 18 Cal. 10, L. R. 17 I. A. 110.
8. Kripasindhu *versus* Ananda, I. L. R. 35 Cal. 34.
*9. Srinath *versus* Dinabandhu, L. R. 42 I. A. 221, I. L. R. 42 Cal 489.
*10. Paul *versus* Robson, L. R. 42 I. A. 180, 18 C. W. N. 933.
11. Jibanand *versus* Kalidas, I. L. R. 42 Cal. 164.
12. Midnapur Zemindary Co. *versus* Hrishikes, I. L. R. 41 Cal. 1108.
*13. Narayan Das Khettry *versus* Jatindra Nath Raychaudhury, 31 C. W. N. 965, I. L. R. 54 Cal. 669, L. R. 54 I. A. 218.
14. Azim Sirdar *versus* Ramlal, I. L. R. 25 Cal. 324.
*15. Binad Lal Pakrashi *versus* Kalu Pramanik, I. L. R. 20 Cal. 708, F. B.
*Bholanath Nandi *versus* The Midnapur Zemindary Co., Ltd., I. L. R. 31 Cal. 503; 8 C. W. N. 425 P. C.

Books recommended:—

Regulation I of 1793.
Preamble to Regulation II of 1793.
Regulation VIII of 1793.
Regulation XIX of 1793 (Sections 1 to 7).
Regulation XXXVII of 1793 (Sections 1-3).
Regulation VIII of 1819.
Regulation XI of 1825.
Act VIII of 1885 (Bengal Tenancy Act). Chapters I to VII and VIII, Chapter IX; Sections 86 to 89, Chapter X, Sections 101-103B, 105 to 109A, 111A, 115, Chapters XI XIII, XIV, XV.
Act XI of 1859.
Act IX of 1908. (Sections 26-28).
U. N. Mitra. Law of Prescription and Easements.
Field. Introduction to the Bengal Regulations (portions relating to Land Tenures).
Mitra. Land Laws of Bengal.

V.—LAW OF CRIMES (ONE PAPER).

Crimes:—Definition. Crimes and civil injuries. Origin and development of criminal law codification. *Mens Rea*. Grounds of Exemption from criminal responsibility. Punishment; its objects and limits. Conspiracy. Abatement. Attempt. Offences and their ingredients. Offences against the State. Sedition. Offences against public tranquillity and public justice. Offences by or relating to public servants. Offences affecting public health, safety, decency and morals. Offences affecting the human body. Homicide. Offences against Property. Forgery. Offences relating to coins, stamps, notes, weights and measures and marriage. Defamation. Criminal intimidation.

Criminal Procedure. Constitution of criminal courts. Powers of Courts. Aid and information to Magistrates and Police. Arrest, with or without Warrant. Summons. Warrant. Proclamation and attachment. Prevention of offences. Place of trial. Transfer of cases. Complaint. Inquiry into cases triable by the High Court or the Court of Session. Charges. Joinder of charges. Joinder of the accused. Trial in Summons cases and Warrant cases. Trial before High Court or Court of Session. Summary trials. Tender of pardon. *Autrefois acquit*. Record of evidence. Chemical Examiner and medical witness. Judgment. Execution. Youthful offenders and First offenders. Appeal. Reference. Revision.

Leading Cases:—

*1. Gonouri Lal Das *versus* Queen, I. L. R. 16 Cal. 206.
2. Prasanna Kumar Patra *versus* Udoy Saunt, I. L. R. 22 Cal. 669.
*3. Queen *versus* Bal Gangadhar Tilak, I. L. R. 22 Bom. 112.
4. Queen *versus* Nayamuddin, I. L. R. 18 Cal. 484.
5. Queen *versus* Gorachand Gope, B. L. R. Supp. Vol. 443, 5 W. R. Cr. 45.
*6. Queen *versus* Sricharan Chango, I. L. R. 22 Cal. 1017.
7. Queen *versus* Haradhan, I. L. R. 19 Cal. 380.
8. Queen *versus* Sashi Bhusan, I. L. R. 15 All. 210.
*9. Queen *versus* Abbas, I. L. R. 25 Cal. 512.
10. Empress *versus* Raisatali, I. L. R. 7 Cal. 352.
11. Khos Muhammad *versus* Nasir Muhammad, I. L. R. 33 Cal. 352.
12. Vaithinath Pillai *versus* Emp., L. R. 40 I. A. 193.
13. Amritlal Hazra *versus* Emp., I. L. R. 42 Cal. 957. (Only as to Joinder of charges and accused.)
*14. Pulin Behari Das *versus* Emp., 15 C. L. J. 517, 16 C. W. N. 1107. (Only as to the Law of Conspiracy.)
15. Barindra K. Ghosh *versus* Emp., I. L. R. 37 Cal. 467, 14 C. W. N. 1114.
16. *Re* Matilal Ghosh, I. L. R. 45 Cal. 169.
17. Amritalal Bose *versus* Corporation of Calcutta, I. L. R. 44 Cal. 1025.
18. Satish Chandra Chakravarty *versus* Ram Dayal Dey, 32 C. L. J. 94.
19. King-Emperor *versus* Shek Abdul. 20 C. W. N. 725.
20. Fatechand Agarwala *versus* Emp., 21 C. W. N. 33.
21. Empress *versus* Dhuno Kazi and another, I. L. R. 8 Cal. 121.
*22. Barendra Kumar Ghosh *versus* King-Emperor, 39 C. L. J. 1, I. L. R. 52 Cal. 197, 29 C. W N. 181. (Only as to interpretation of section 34, Indian Penal Code.)

Books recommended:—

Indian Penal Code, Chapters I-V, and such portions of Chapters VI-XXIII as do not relate exclusively to the amount of punishment to be inflicted.

Criminal Procedure Code, omitting Chapters I, IX, XIV, XXXIII-XL, XLII, XLIII, XLVI (except section 562.)

Stephen. General View of the Criminal Law of England.

Huda. Law of Crimes.

VI.—LAW OF EVIDENCE AND CIVIL PROCEDURE (ONE PAPER).

A.—Civil Procedure.

Civil Procedure. Procedure and Substantive Law. Organisation of Courts in India. Civil and Revenue Courts. Scope and application of the Civil Procedure Code. Code not exhaustive. Inherent power of

Courts. Structure of the Code. Suits and other civil proceedings. Right of suit. Jurisdiction of courts. Place of suing. Frame of suits. Joinder of causes of action and parties. Representative suits. Service of summons on Defendant. Recognised agents and pleaders Pleadings. Examination of Parties. Discovery. Framing of Issues. Hearing of suit. Default of appearance and failure to prosecute. *Res Judicata* and analogous pleas in bar. Execution. Special procedure in particular classes of suits. Incidental and supplemental proceedings. Appeal and incidence thereof as depending on the distinction between "decree" and "order." Procedure in appeals. First Appeals. Second Appeals. Appeals from orders. Appeals to the King in Council. Reference and Revision.

Rules of procedure not ends in themselves. Distinction between Rules which are mandatory and Rules which are recommendatory.

Leading Cases:—

1. Ramendranath *versus* Brojendranath, I. L. R. 45 Cal. 111.
2. Saminathan Chetty *versus* Palaniappa Chetty, L. R. 41 I. A. 142, 18 C. W. N. 617.
3. Cottingham *versus* Earl of Shrewsbury, 3 Hare 627.
4. Manimohan *versus* Ramratan, I. L. R. 43 Cal. 148.
*5. Ishan Chandra Sarkar *versus* Benimadhab Sarkar, I. L. R. 24 Cal. 62.
*6. Zainalabdin *versus* Asghar, I. L. R. 10 All. 166, L. R. 15 I. A. 12.
7. Malkarjun *versus* Narhari, I. L. R. 25 Bom. 337, 5 C. W. N. 10, I. L. R. 25 Bom. 337, L. R. 27 I. A. 216.
8. Raghunath *versus* Sundar, I. L. R. 42 Cal. 72, 18 C. W. N. 1058, L. R. 41 I. A. 251.
9. Kalamea *versus* Harperink, I. L. R. 36 Cal. 323, 13 C. W. N. 249, L. R. 36 I. A. 32.
10. Thakur Barmha *versus* Jibanram, I. L. R. 41 Cal. 590.
*11. Manzur Hasan *versus* Muhammad Zaman, 29 C. W. N. 486, I. L. R. 47 All. 152; L. R. 52 I. A. 61.
12. Walian *versus* Bankebehari, I. L. R. 30 Cal. 1021, 7 C. W. N. 774, L. R. 30 I. A. 182.
13. Rashidunessa *versus* Muhammad Ismail, L. R. 36 I. A. 168, 13 C. W. N. 1182.
*14. Kamini *versus* Pramatho, 20 C. L. J. 476, 19 C. W. N. 755.
15. Indrajit *versus* Amar Singh, 28 C. W. N. 279, 39 C. L. J. 318.
16. Ghuznavi *versus* Allahabad Bank, I. L. R. 44 Cal. 929.

Books recommended:—

Ghose. Introduction to the Civil Procedure Code.

Civil Procedure Code—Sections 1-158, Sch. I, Or. I-XII, XIV-XV, XVII-XVIII, XX-XXIII, XXX-XXXIII, XXXIV-XXXV, XXXIX-XLIII, XLV-XLVII; Sch. II.

Book of reference—

Mogha—The Law of Pleadings in British India.

B.—Evidence.

Law of Evidence. Theoretical bases. Grounds of belief in human testimony and sanctions of truth. Collateral Securities for ensuring the veracity and completeness of evidence. Factors on which credibility of human testimony depends.

Artificial character of judicial evidence and reason therefor. Distinctive feature of the Common Law system of evidence. Special rules in criminal trials. Instruments of Evidence: (*a*) Witness; (*b*) Real Evidence; (*c*) Documents: Competency and compellability of witnesses to give evidence. Privilege. Circumstantial evidence. Hearsay and other exclusionary rules: their *rationale*. Documentary evidence. Primary and Secondary Evidence. Exclusion of parol evidence to vary

or add to document. Proof of handwritings: Public and Private documents. Evidence and proof. Judicial notice. Presumption. Burden of proof. Estoppel. Admissibility of confessions and admissions and other statements made out of Court. Categories of relevancy. Relevancy of opinions and judgments. Character when relevant. Examination and cross-examination of witnesses. Effect of improper admission of evidence.

Leading Cases:—

1. R. *versus* Abdulla, 7 All. 385
2. Emp. *versus* Mangal Mali, I. L. R. 41 Cal. 601.
3. Amir Ali *versus* Aykub Ali, 19 C. L. J. 428.
4. Rupchand *versus* Sarbeswar, 10 C. W. N. 747, 3 L. J. 629.
*5. Balkishen Das *versus* Legge, I. L. R. 22 All. 149, L. R. 27 I. A. 58.
6. Superintendent, Remembrancer of Legal Affairs *versus* Lalit Mohan Singh Roy, 25 C. W. N 788.
*7. Saratchunder De *versus* Gopal Chunder Laha, I. L. R. 20 Cal. 296, L. R. 19 I. A. 203.
*8. Emp. *versus* Panchudas, I. L. R. 47 Cal. 671, 31 C. L. J. 402, 24 C. W. N. 501. (Only as to admissibility in evidence of subsequent similar but unconnected transactions.)
*9. Gujju Lall *versus* Fatteh Lall, I. L. R. 6 Cal. 171.
10. Kantaprosad *versus* Jagat, I L. R. 23 Cal. 335.
*11. Surendra Nath Ray *versus* Krishna Sakhi Dasi, 15 C. W. N. 239.

Books recommended:—

Indian Evidence Act.
Best. Law of Evidence, Books I and II and Book III, Part I.
Phipson. Law of Evidence.
Stephen. Introduction to the Law of Evidence.
Cockle. Cases on Evidence.

C.—Limitation.

Law of Limitation. Limitation and Prescription. Object, interpretation and application of statutes of limitation. Waiver of limitation. Computation of period of limitation. Grounds of exemption from or extension of period of limitation and suspension of limitation. Exclusion from the benefit of statute in cases of trustees. Limitation in suits for recovery of land and adverse possession in land.

Leading Cases:—

1. Rudrakanta *versus* Nabakishore, I. L. R. 9 Cal. 663.
2. Maniram *versus* Seth Rupchand, I. L. R. 33 Cal. 1047, L. R. 33 I. A. 163.
3. Balawant Rao *versus* Puran Mal, I. L. R. 6 All. 1, L. R. 10 I. A. 90.
4. Gopeswar *versus* Ishan Chandra, I. L. R. 41 Cal. 1125.
*5. Rani Sarnamayee *versus* Shoshee Mookhee, 12 M. I. A. 244, 2 B. L. R. P. L. 10.
*6. Kumar Basanta Roy *versus* Secretary of State, L. R. 44 I. A. 104, I. L. R. 44 Cal. 585.
*7. Meyappa Chetty *versus* Supramanian Chetty, 20 C. W. N. 833, L. R. 43 I. A. 113.
8. Brijindar *versus* Kanshi Ram, I. L. R. 45 Cal. 95.

Book recommended:—

Limitation Act, omitting Schedules. Arts. 142 and 144.

FACULTY OF LAW.

Syllabus for the M. L. Degree Course.

I.—JURISPRUDENCE.

Brown. Austinian Theory of Law.
Holmes. Common Law.
Salmond. Jurisprudence.
Holland. Jurisprudence.
Gray. Nature and Sources of Law.
Borolzheimer. World's Legal Philosophies.
Kohler. Theory of Law.
Vinogradoff. Historical Jurisprudence.
Bryce. Studies in History and Jurisprudence.
Kocourek and Wigmore. Evolution of Law.
Lee. Historical Jurisprudence.
Bentham. Theory of Legislation.
Green. Principles of Political Obligation.
Brown. Underlying Principles of Modern Legislation.
Ilbert. Legislative Forms and Methods.
Acharjya. Codification.
Dicey. Law and Public opinion.

II.—HINDU LAW.

Manusamhita.
Yajnavalkyasamhita.
Gautama Dharmasutra.
Bandhayana Dharmasutra.
Vishnu Dharmasutra.
Mitakshara—Achara, (Introduction, Marriage, and Rajadharma) and Vyavahara.
Vyavahara Mayukha—Inheritance only.
Viramitradaya—Inheritance only.
Vivadachintamani—Inheritance only.
Smriti Chandrika—Inheritance only.
Dayabhaga—Inheritance only.
Dattaka Mimansa.
Banerjee. Marriage and Stridhana.
Sen. Hindu Jurisprudence.
Mandlik. Hindu Law.
J. C. Ghosh. Hindu Law.
Sastri. Hindu Law.
Bhattacharjya. Hindu Law.
Mayne. Hindu Law.
Trevelyan. Hindu Law.
Sarbadhicary. Hindu Law of Inheritance.
Sastri. Hindu Law of Adoption.

III.—MUHAMMADAN LAW.

Rahim. Mahomedan Jurisprudence.
Wilson. Anglo Muhammadan Law.
Baillie. Muhammadan Law.
Robertson-Smith—Marriage and Kinship.
Ameer Ali. Mahomedan Law.
Yusuf. Tagore Law Lectures.
Tyabjee. Mahomedan Law.
Suhrawardy. History of Moslem Jurisprudence.
Al Serajajiya.
The Hedaya.
The Medjidieh.

IV.—ROMAN LAW.

Justinian. Institutes. (Translation by Moyle).
Gaius. Institutes (Ed. Poste).
Justinian. Digest (Translation by Munro).
Sohm. Institutes of Roman Law.
Roby. Roman Private Law.
Buckland. Roman Law.

V.—PRIVATE INTERNATIONAL LAW.

Westlake. Private International Law.
Dicey. Conflict of Laws.
Beal. Leading cases on Private International Law.

VI.—CONSTITUTIONAL LAW.

Dicey. Introduction to the study of the Law of the Constitution.
Maitland. The Constitutional History of England.
Taswell-Langmead. English Constitutional History.
Montagu and Chelmsford. Report on Indian Constitutional Reforms.
Fifth Report—(Portions dealing with the constitution of the Government of India).
Report of Joint Parliamentary Committee on the Government of India Act.
Government of India Act. 1920.
N. Ghose. Comparative Administrative Law (Tagore Law Lectures).

VII.—PRINCIPLES OF EQUITY AND TRUSTS.

Story. Equity.
Langdel. Survey of the Equity Jurisdiction.
Underhill. Trusts and Trustees.
Agnew. Law of Trusts.
Select Essays on Anglo-American Legal History (Essays dealing with Equity).

VIII.—HISTORY OF ENGLISH LAW.

Pollock and Maitland. History of English Law.
Holdsworth. A History of English Law.
Maitland. Collected Papers.
Vingradoff. Oxford Studies (Essays dealing with English Legal History).
Select Essays in Anglo-American Legal History.

IX.—LAW OF TRANSFER AND PRESCRIPTION AND EASEMENTS.

Dart. Vendors and Purchasers.
Williams. Vendors and Purchasers.
Ghosh. Law of Mortgages (Tagore Law Lectures).
Goddard. Law of Easements.
U. N. Mitra. Law of Prescription and Easement.
Transfer of Property Act.

X.—CRIMES AND CRIMINOLOGY.

Stephen's Digest of Criminal Law.
Russel. Crimes and Misdemeanours.
Mayne. Indian Criminal Law.
Archbold. Criminal Pleadings.
Garofalo. Criminology.
Tarde. Penal Philosophy.
Lombroso. Crime, its Causes, and Remedies.

XI.—REAL PROPERTY AND LAND LAWS.

Williams. Real Property.
Challis. Real Property.
Digby. History of Real Property.
Finch. Cases on the Law of Real Property.
Harington's Analysis.
Woodfall. Landlord and Tenants.
Foa. Landlord and Tenant.
Doss. Law of Riparian Rights.

S. C. Mitra. Land Laws.
Phillips. Land Tenures
Baden Powell. Indian Land Revenue System.
Indian Land Revenue System. Published by the Government of India.
Bengal Tenancy Act.
Land Revenue Regulations; Act XI of 1859.

XII.—LAW OF EVIDENCE.

Wigmore. Law of Evidence.
Best. Evidence.
Thayer. Preliminary treatise on Evidence.
Phillimore. History of Evidence.
Wigmore. Cases of Evidence.
Indian Evidence Act

XIII.—CONTRACTS AND TORTS.

Pollock. Principles of Contracts
Street. Foundations of Legal Liabilities.
Fry. Specific Performance.
Finch. Cases on Contracts.
Kenny. Cases on Torts.
Salmond. On Torts.
Satis Chandra Banerjee. The Law of Specific Relief in British India (Tagore Law Lectures).
The Indian Contract Act.

XIV.—LAW OF TESTAMENTARY AND INTESTATE SUCCESSION.

Underhill and Strahan. On the Interpretation of Wills and Settlements.
Thebald. Law of Wills.
Ingpen. The Law of Executors.
Henderson. The Law of Intestate and Testamentary Succession (Tagore Law Lectures).
Ashutosh Mukhopadhyaya. The Law of Perpetuities in British India (Tagore Law Lectures).
The Indian Succession Act.
The Hindu Wills Act.
The Probate and Administration Act.
The Specific Relief Act.

Calcutta University.

Senate House, the 5th April 1937.

NOTIFICATION No. T. 461.

It is notified for general information that the revised edition of the Matriculation Arabic Selections (Edition of 1936) has been reprinted this year but that the pieces prescribed for the Matriculation Examination of 1939 as notified in the *Calcutta Gazette* under notification No. T. 449, dated 17th October 1936, do not appear in the same pages of the reprint as in the revised edition of 1936.

The alterations in the paging are noted below:—

Pieces to be read (Edition of 1936).			Pieces to be read (Reprint Edition of 1937).
19-36	..	..	No alteration.
70-105	..	..	70-104
122-126	..	..	121-125
141-147	..	..	140-146
150-154	..	..	149-153

J. CHAKRAVORTI, *Registrar.*

Orders by the Inspector of Schools, Chittagong Division.

Chittagong, the 9th April 1937.

The following teachers are declared to have passed the Examination in the Art and Practice of Teaching held on the 5th April 1937:—

1 Mr. N. P. Das, Assistant Master, Arkan Anglo-Bengali School, Akyab.
2 Babu Mong Kyaw Zan U, Burmese Teacher, Rangamati Government High School.
3 Maulvi Muzaffar Ahmad, 2nd Pandit, Hajiganj Girls' Junior Madrasah.
4 Maulvi Abdul Hamid, Head Pandit, Bagmora Junior Madrasah.
5 Maulvi Nuruzzaman, Head Master, Sonapur Ali Akbar Middle English School.
6 Maulvi Tariq Ullah, Head Pandit, Government Middle English School, Chittagong.

A. AHMAD,
Inspector of Schools, Chittagong Division.

Medical College, Calcutta, 1937.

Rules for the guidance of students seeking admission into the Medical College, Calcutta.

1. Two classes of students are admitted to the college:—

(1) *Civil pupils' class.*—Admission to this class is restricted to students, male or female, who were born within or whose parents are domiciled within the territorial jurisdiction of the Calcutta University. Three students are also eligible for admission from the Dacca University area and three from the Dacca Intermediate Board. Students from other provinces and from Indian States for whom places have been reserved are also eligible for admission to the college.

Only students who intend to take the M. B. examination of the Calcutta University are admitted to this class.

(2) *Military pupils' class.*—Only European or Anglo-Indian students are admitted to this class (see separate prospectus for military pupils whose admission is regulated by the Director-General, Indian Medical Service).

NOTE.—Casual students are not admitted. No students are admitted other than those in one or other of the above classes.

2. The minimum preliminary qualification for admission is the First Class Pass certificate of the I. Sc. examination of the Calcutta University with Physics, Chemistry and Mathematics or an examination recognised as equivalent to it. This rule may be relaxed in favour of Muhammadan students and such candidates having passed the said examination in the second division may be admitted, provided they are otherwise considered suitable, to make up the number allotted for the Muhammadan students. In assessing the claims of those eligible for admission special weight will be attached to proficiency in English.

3. (*a*) Female students qualified under rules 1 and 2 will be admitted to the college, provided there is a vacancy in the Swarnamoyee Hostel in which all female students must reside. For special reasons to be recorded in writing, the Principal may allow any female student to reside outside this Hostel.

(*b*) Female students studying in the college but belonging to provinces other than Bengal and not domiciled in Bengal will pay rents for accommodation in the Swarnamoyee Hostel.

4. The session commences with the summer term which begins on the 15th June and ends on the day before the commencement of the Durga Puja holidays. The winter term commences on the day after close of the Durga Puja holidays and ends on the 31st March.

5. All applications direct from new students in Bengal for admission to the college should be accompanied by a fee of Rs. 4 which will not be refunded.

All new students must apply for admission to the Principal, Medical College, Calcutta, in the prescribed form, available in his office before the 25th May except in the following cases:—

(*a*) Students from other provinces for which places are reserved should apply to the Inspector-General, Civil Hospitals, of those provinces for admission within such dates as that officer may prescribe.

(*b*) The candidates from Indian States will be nominated by the States themselves.

(*c*) Students from the Dacca University area will be selected as follows:—

(*i*) Three students will be selected by the Dacca University, and

(*ii*) Three students by the Chairman of the Dacca Intermediate and Secondary Education Board.

6. The number of civil students to be admitted each year is 105. Vacancies are allotted as follows:—

Other provinces and Indian States including 1 from Nepal State	8
Dacca	6
Surgeon-General's nominees	5
Women	5
Muhammadan	21
Others	60

Preference for admission will usually be given to candidates who have superior qualifications, but the final selection lies entirely with the Selection Committee appointed by Government.

(*a*) Besides the students nominated by the Indian States under rule 5 (*b*), one student will be nominated by the Inspector-General of Civil Hospitals, Central Provinces, six students (including one female student) by the Inspector-General, Civil Hospitals, Assam, and six by the authorities mentioned in rule 5 (*c*).

These students must possess the qualifications mentioned in rule 2 and the nomination must reach the Principal, Medical College, Calcutta, before the 10th June each year, failing which the vacancies will be filled with local candidates. Vacancies arising by resignation or otherwise in places filled by reservation for the authorities in paragraph (*a*) cannot be filled again by those authorities during the year.

(*b*) Five seats shall be reserved annually for nomination by the Surgeon-General provided the candidates possess the necessary physical qualifications and at least a 2nd class pass certificate of the I.Sc. examination of the Calcutta University with the subjects mentioned in rule 2 or of an examination recognised as equivalent to it. These nominations shall ordinarily be made after the Selection Committee have made their choice under clause (*c*).

(*c*) The remaining vacancies shall be filled up by the Selection Committee specially appointed by Government from year to year. This Selection Committee will be the authority to select candidates belonging to Bengal.

(*d*) Every student selected by the Selection Committee for admission shall be examined medically in the Medical College, have his health card filled up and be passed fit before his fees are accepted, provided that if it is proposed to reject any student on the ground of his being medically unfit as a result of such examination, such decision shall not take effect unless it is sanctioned by the majority of votes of the members of the medical profession on the Selection Committee.

(*e*) Any candidate who has—

(*i*) endeavoured to enlist for his candidature the support of persons of influence or of Government officials,

(*ii*) personally canvassed any member of the Selection Committee or on whose behalf anyone else has canvassed any such member,

(*iii*) produced any letter of recommendation other than certificates from teachers or testimonials from persons under whom he has actually been employed,

shall be held to be disqualified for admission into the Medical College.

7. Of the total number of candidates nominated by the Selection Committee at least one-fourth should be Muhammadans, if a suitable number of qualified candidates belonging to that community can be obtained.

8. Selected candidates must pay the following fees within the time prescribed by the Principal, failing which their names will be struck off the rolls:—

	Rs.
Admission fee	25
Fees for summer term	100
Athletic Club fees	4
Caution money for Laboratory Practice ...	10
Total ...	139

(a) A student who without leave absents himself from the College or his hostel for more than one month, shall be removed from the rolls of the College, if the College Council so recommend. No refund of fees paid can be claimed in such cases.

Fees other than caution money once paid cannot be refunded except to those whose claim for refund is tenable under rule 17. The levy, accounting and disposal of caution money will be governed by the rules prescribed under Government order No. 1689Medl., dated the 24th May 1932.

9. Forms of application for admission will be issued from the 15th April and received up to the 25th May every year.

10. Failed students must apply for admission and pay the fees within the date prescribed by the Principal, otherwise their claim will lapse.

11. All civil students admitted after 1925-26 will pay Rs. 200 in two instalments, viz., Rs. 100 for the summer term and Rs. 100 for the winter term. They must also pay the annual Athletic Club fee of Rs. 4 (with the exception of female students) and any caution money due for attendance at practical classes along with the fees for their summer term. Fees once paid cannot be refunded except those whose claim for the refund is tenable under rule 17.

12. The fees for each term are to be paid in one instalment. The fees for the summer term are due (except from new students) on the 15th June and those for the winter term on the 1st November and must be paid together with athletic club fees, on those dates or on such later dates as the Principal may direct, after which a daily fine of annas four will be levied along with the fees on each defaulter. The names of students whose fees are more than 30 days overdue will be removed from the rolls of the college.

(a) A student detailed to hospital duty who overstays the authorised vacation leave without the permission of the Principal will be liable to pay a fine of Rs. 2 only for each day of overstay.

13. A student kept back in, or referred back to the class in which he was previously studying on account of his failure to appear at or pass any examination prescribed for promotion to the next higher class, will pay Rs. 50 each term until he passes the examination in question, after which he will pay fees on the full scale laid down in rule 11.

14. The fee for certificates issued to civil students leaving the college before completing their study shall be Rs. 40 for each course of lectures and practical classes and Rs. 30 for every three months of hospital practice.

[In calculating the sum to be paid under this rule the amount of college fees paid by the student (or in the case of a student enjoying a stipendiary scholarship and free tuition the amount of which would have been paid by him had he been a paying student) shall be deducted.]

15. Students who fail to appear at or to pass the Final M. B. Examination shall immediately on readmission after failure, pay fees each term at the rate of Rs. 25 for each of the subjects in which they are to appear at the subsequent examination.

16. The fee for post-graduate students undergoing a course of training in the Pathological, Bacteriological, Physiological or Chemical Laboratory is Rs. 90 for a period not exceeding six months.

17. Students who hold scholarships awarded by the Government of Bengal or Government scholarships awarded by the Board of Intermediate and Secondary Education, Dacca, and all holders of Mohsin Stipend irrespective of the authority granting such stipend are not required to pay the annual fee of Rs. 200 for the year in which they hold such scholarships if they are natives of Bengal or if their parents are domiciled in Bengal. All holders of other scholarships, whether granted by other Local Governments, Local Bodies or the Dufferin Fund, shall pay the same fees as Civil Students.

18. The following is the curriculum of the College:—

Civil students.

I. First Year (one summer term and one winter term)—

Lectures on Physics, Chemistry (Inorganic and Organic), Botany and Zoology and Practical Classes in all these subjects.

Test Examinations in each of these subjects will be held during the course of the First Year Class and students who fail* in these examinations will not be sent up for the Preliminary Scientific M.B. Examination. Students failing* to pass the Preliminary Scientific M.B. Examination of the Calcutta University four times within two years will be transferred to the Membership Course of the State Medical Faculty of Bengal (Such students shall be allowed to appear at the Primary Membership Examination of the State Medical Faculty at the first two available examinations after their transfer to the Membership Course and they will be permanently removed from the rolls of the College in case of their failure* to pass the Primary Membership Examination in the second chance.)

N.B.—First year's course also includes Anatomy. In the summer term there will be demonstrations in which 75 per cent. of attendance is compulsory. In the winter term the superior extremity is to be dissected by the 15th of January.

II. Second Year (one summer and one winter term)—

Lectures on Anatomy, Physiology, Practical Classes in Physiology and Dissections to be followed by Test Examinations in these subjects during the course.

Students failing* to pass the Test Examinations in Anatomy and Physiology will not be eligible for any scholarship and will not be promoted to the Third Year Class.

III. Third Year (one summer and one winter term)—

Lectures on Anatomy, Physiolgoy and Materia Medica and Pharmacology Dissections and Practical Classes in Anatomy, Physiology and Pharmacy followed by Test Examinations in Anatomy and Physiology.

Students who fail* in these Test Examinations will not be sent up for the First M.B. Examination. Students who fail* four times in two years at the First M.B. Examination will not be allowed to go on with the M.B. Course, but will be transferred to the Membership Course of the State Medical Faculty, Bengal. (Such students shall be allowed to appear at the Intermediate Membership Examination of the State Medical Faculty at the first two available examinations after their transfer to the Membership Course and they will be permanently removed from the rolls of the College in case of their failure* to pass the Intermediate Membership Examination in the second chance.)

IV. Fourth Year (one summer and one winter term)—

Lectures on Pharmacology and Materia Medica, Elementary Bacteriology and General Pathology, Medicine, Surgery and Clinical Medicine and Practical Classes in Elementary Bacteriology and Pathology.

Test Examinations in Elementary Bacteriology and General Pathology, Pharmacology and Materia Medica will be held during the course. Students who fail* in these Test Examinations will not be sent up for the Second M.B. Examination. This year's curriculum also includes Hospital Practice for 12 months and 20 practical classes in Clinical Methods and 30 Demonstrations in Practical Surgery and Bandaging. Students who fail* four times to pass the Second M.B. Examination will not be allowed to continue in the M.B., Course, but will be transferred to the Membership Course of the State Medical Faculty of Bengal.

*Failure to appear at an examination is equivalent to failure in the examination.

V. Fifth Year (one summer and one winter term)—

Lectures on Forensic Medicine and attendance at 12 Medicolegal Post-mortem Examinations and Lectures on Hygiene and Public Health with Practical Demonstrations.

Test Examinations in these subjects will be held during the course. Students who fail* in these Test Examinations will not be sent up for the Third M.B. Examination. This year's curriculum also includes lectures on Medicine, Clinical Medicine, Surgery, Dental Surgery (Optional), Midwifery, 20 Demonstrations in Practical Midwifery and Hospital Practice for 12 months. Students who fail* four times to pass the Third M.B. Examination will not be allowed to continue in the M.B. Course, but will be transferred to the Membership Course of the State Medical Faculty of Bengal.

VI. Sixth Year (one summer and one winter term)—

Lectures on Advanced Midwifery, Ophthalmic Surgery, Clinical and Operative Surgery, Mental Diseases, Hospital Practice for 12 months, including attendance in the special departments for diseases of the eye, ear, nose and throat and venereal diseases, elementary instruction in Radiology and classes in Special Pathology and in Surgical Anatomy.

Any student failing* to pass the Final M.B. Examination of the Calcutta University within the limit of 19 months calculated from the date of the candidate's passing in a subject or subjects of the said examination, will be transferred to the Membership Course of the State Medical Faculty of Bengal.

19. In order to qualify for signature for lectures and Practical Classes and attendance at Hospital 75 per cent. of possible attendance at lectures, demonstrations, Practical Classes and working days in the wards of the Hospital is compulsory. Absence with or without leave is calculated as non-attendance.

20. The following are the scholarships and rewards obtained by students:—

(*a*) Ten college scholarships of Rs. 12 each with free tuition tenable for one year awarded to the first ten students on the results of the Test Examination of the first year class, provided such students also pass the Preliminary Scientific M. B. Examination of the Calcutta University at the first attempt.

(*b*) Ten college scholarships of Rs. 12 each with free tuition tenable for one year awarded to the first ten students on the results of the second year's Test Examinations, provided they have not attended more than one course in the second year.

(*c*) Ten scholarships of Rs. 12 each with free tuition awarded to the first ten students on the results of the Test Examinations of the third year class, provided such students also pass the First M. B. Examination of the Calcutta University at the first attempt.

(*d*) Ten scholarships of Rs. 12 each with free tuition tenable for one year awarded to the first ten students on the results of the Test Examination of the fourth year class, provided such students also pass the Second M. B. Examination of the Calcutta University at the first attempt.

(*e*) Ten scholarships of Rs. 12 each with free tuition tenable for one year awarded to the first ten students on the results of the Test Examination of the fifth year class, provided such students also pass the Third M. B. Examination of the Calcutta University at the first attempt.

NOTE.—Only students of Bengal are allowed to compete for these scholarships. 40 per cent. is the pass mark for Text Examinations, 60 per cent. in the aggregate must be obtained by a candidate to be eligible for a scholarship. All scholarships are granted subject to good conduct and satisfactory progress.

(*f*) Six Government scholarships (one for each year) of the value of Rs. 25 will be awarded to the female students of the regular classes who do not hold Dufferin or other scholarships except Mrs. Mary Chandra's Scholarship.

*Failure to appear at an examination is equivalent to failure in the examination.

(*g*) *Mohsin scholarships.*—Six stipends of the value of Rs. 15 each tenable in the Medical College, Calcutta, are annually awarded by the Director of Public Instruction from the Mohsin Endowment Fund to deserving poor Bengali Muhammadan students in the following manner:—

Two scholarshps on admission tenable for one year only on the result of the I. Sc. Examination.

Two scholarships tenable for two years on the result of the Preliminary Scientific M. B. Examination.

Two scholarships on admission tenable for three years on the result of the First M. B. Examination subject to their passing the Second and Third M. B. Examinations in regular course.

(*h*) A limited number of stipends will be granted to Muhammadan students in straitened circumstances who must prove to the satisfaction of the Principal that they are poor and deserving Bengali Muhammadan students.

21. If on account of the death, resignation or dismissal of any college scholar a scholarship falls vacant, such a scholarship for the remainder of its tenure will be awarded to the next best student in the list of the first scholarship examination or to such other students as the Principal may consider fit.

22. Holders of college scholarships, any other Government scholarships or Trust Fund Scholarships administered by Government are not eligible for the Durga Charan Laha Scholarship. Similarly a student already holding a scholarship, either on the results of the University Examination or granted by Government, is not eligible to compete for the college scholarships.

23. Civil students who at any time are kept back for a second year of study, in all the subjects of one curriculum, are thereby rendered ineligible for any of the stipendiary scholarships awarded by the Government of Bengal. They are, however, eligible for the special scholarships, Mohsin Stipends and class prizes and medals and certificates of honour of the college except the Sir Frank Connor Memorial Prize for which only the regular students are eligible.

24. Certificates of honour to the number of three in each subject, may be awarded by the Professor, subject to the sanction of the Principal, to students who have not obtained the medal but are deemed worthy of it (on the result of the test examination in that subject or any special Honours Examination held for the purpose).

25. The following is the list of prizes and special scholarships:—

List of prizes and special scholarships.

Name of reward.	Subject.	To whom open.	Condition of grant.	When awarded.	Value and nature.	Tenure.
					Rs. a.	
Goodeve Scholarship.	Midwifery ..	Civil students of fifth year's curriculum who are bona-fide natives of India of Hindu or Muhammadan parentage.	On the result of the special examination in Midwifery.	At the end of the fifth year.	12 0 per month.	One year.
F. C. Chatterjee Scholarship.	Histology ..	Civil students of Indian parentage.	(*a*) The best student in Histology. Normal and Morbid, at the end of fourth year. (*b*) Good conduct.	Annually in June.	15 0 per month.	Ditto.
Abdul Gunny Scholarship.	....	Civil students	The best student in all subjects at the College Examinations of the first to fourth years inclusive.	Ditto	22 0 per month.	Ditto
Prosector's Prize.	Anatomy ..	Ditto ..	(*a*) The first two students in Anatomy at the end of the second year. (*b*) Satisfactory work as prosector.	Annually	24 0	

Name of reward.	Subject.	To whom open.	Condition of grant.	When awarded.	Value and nature.	Tenure.
					Rs. a.	
Bholanath Bose's Prize.	Medicine or Surgery.	Civil students	The most successful student of the fourth year at bedside diagnosis of disease in Medicine or Surgery.	Annually	35 0	
Government Prize in Clinical Medicine.	Clinical Medicine.	Civil students and others.	The best clinical student of fourth and fifth years.	..	35 0	
Government Prize in Clinical Surgery.	Clinical Surgery.	Ditto ..	The best clinical dresser of fourth and fifth years.	..	Instruments worth not exceeding Rs. 35.	
Duke of Edinburgh's Prize.	Surgery ..	Civil students	To the best student of the fourth and fifth years.	..	28 0	
Raye Testimonial Prize.	Anatomy ..	Civil and Military pupils.	On the result of third year examination in Anatomy.	Annually	56 0	
Maharaja of Gwalior Prize.	Preliminary Scientific M. B. Examination.	Civil students	Highest marks at the Preliminary Scientific M. B. Examination and provided that the winner does not get any other prize.	Ditto	10 8	
Dr. Chandra's Scholarship.	Materia Medica and Therapeutics.	(1) Senior students of the Medical College. (2) Ex-senior students of the Medical College studying in a Medical College in India or Europe. (3) Any Graduate or Licentiate in Medicine of whatever standing	Examination and Thesis. Winner need not complete course of study in India.	Ditto	30 2 per month.	One or two years.
Mrs. Mary Chandra's Scholarship.	....	Female medical students of the second year.	To the female medical student who stands first at the first year's examination. No restriction on place of study afterwards.	Annually at the end of first year.	20 0 per month.	Two years.
Sir Pardey Lukis Memorial Scholarship.	Medicine ..	Civil and Military students.	To the student who stands first at the Honours Examination in Medicine at the end of the fifth year.	Annually at the end of the fifth year.	20 0 per month.	One year
Banku Behari Gupta Scholarship.	....	To a native of the Tangail subdivision.	Awardable to a student of the Tangail subdivision, preferably of village Bhatgram who has passed his Matriculation Examination from the Pogose School, Dacca.	Annually on admission.	10 0 per month.	Ditto.
Goodeve ..	Anatomy ..	Civil students	To the best Indian student of second year in the subject.	End of second year.	Silver.	
Macnamara ..	Chemistry ..	Ditto ..	To the best Indian student of first year class.	End of first year.	Do.	
Class ..	Ditto ..	Civil and Military students.	Ditto ..	Ditto	Gold.	
Class ..	Botany ..	Civil students	Ditto ..	Ditto	Do.	
Class ..	Comparative Anatomy.	Ditto ..	Ditto ..	Ditto	Do	
Class ..	Physiology ..	Civil and Military students.	To the best student of third year.	End of third year.	Do.	
Class ..	Anatomy ..	Ditto ..	Ditto ..	Ditto	Do.	
Class ..	Materia Medica and Pathology.	Ditto ..	To the best student of fourth year class in those subjects.	End of fourth year.	Do.	
Class ..	Medicine and Surgery.	....	To the best student of fifth year class in those subjects.	End of fifth year.	Do.	
Class ..	Midwifery ..	....	To the best student of the sixth year class in this subject.	End of the sixth year class.	Do.	

Name of reward.	Subject.	To whom open.	Condition of grant.	When awarded	Value and nature.	Tenure.
					Rs. a.	
Class ..	Dental Surgery.	Civil students	To the best Civil students of the fifth year only.	End of fifth year.	Gold.	
Class ..	Medical Jurisprudence and Hygiene.	Civil and Military students.	To the best student of fifth year.	Ditto	Do.	
Class ..	Ophthalmic Surgery and Ophthalmic Medicine.	Civil students	To the best of sixth year Civil and fifth year Military students.	Ditto	..	
Orfilla ..	Medical Jurisprudence.	Ditto ..	To the best student at the oral and practical portion of the Pass Examination of the third M.B., held in April.	Ditto	Silver.	
Calvert ..	Medicine ..	Ditto ..	To the student who stands second in the Honours Examination in Medicine at the end of fifth year.	Annually at the end of fifth year.	Do.	
Sutherland ..	Medical Jurisprudence.	Ditto ..	To the second best student in Practical Medical Jurisprudence at the third M. B. Examination.	End of fifth year.	Do.	
Wilson ..	Operative Surgery.	Ditto ..	To the student of the sixth year class who secures the highest marks in Operative Surgery in an examination conducted by the Professor of Surgery.	Ditto	Do.	
Deare Prize ..	Clinical Medicine.	Ditto ..	To the best regular student of the sixth year class.	Annually	80 0 or thereabout.	
Anandalal Sanyal Prize.	Midwifery ..	Ditto ..	To the student who stands second in the class Assistantship Examination.	End of the fifth year.	95 0 Prize in books.	
Hemnath Ghosal Scholarship.	....	Ditto ..	Student passing the First M. B. Examination of the Calcutta Medical College who stands next to the student securing Government scholarship.	At the end of third year.	7 0	One year.
Shanks Medal	Clinical Pathology.	Ditto ..	To the best student of the fifth and sixth year classes on the results of a competitive examination in Clinical Pathology.	Annually	Silver Medal.	
Sir Frank Connor Medal.	Surgical Anatomy.	Ditto ..	To the student of the sixth year class who obtains the highest number of marks in Surgical Anatomy.	Annually at the end of the Surgical Anatomy class and before the commencement of the Final M.B. Examination.	Do.	
Green-Armytage Prize.	Clinical Gynaecological and Obstetrical Pathology.	Sixth year Civil regular students and Final M.B. passed students qualified not more than six months before examination.	To the best student	Annually	Money donation of Rs. 50 and a gold medal valued at Rs. 25.	
Sir Frank Connor Memorial Prize.	Surgery ..	Regular student of the 6th year class.	To the student who stands first in Surgery at the Final Examination among the successful students of this College.	Ditto	In books or instruments to be settled by the Professor of Surgery.	
Dr. Lal Mohan Ghosal Silver Medal.	Physiology	To the best student of the second year class.	On the result of the annual Test Examination at the end of the second year class.	Ditto	Silver Medal.	

MEDICAL COLLEGE, CALCUTTA.

Application for Enrolment.

To be submitted on or before the 25th May.

[No application will be registered unless a fee of Rs. 4 only is paid either personally or by money-order.]

N.B.—The admission is restricted to students who are born within or whose parents are domiciled within the territorial jurisdiction of the Calcutta University.

This application must accompany a certificate from the Principal of the College from which the candidate appeared in (or passed) the I.Sc. Examination that he had Physics, Chemistry and Mathematics in his I.Sc. course.

1. Name.....
2. Age.....
3. Race, caste or religion, nationality.....
4. Residence (native district, village and post office).....

   .....
5. Father's name (alive or deceased).....
6. (If father dead, guardian's name and residence.).....

   .....

   (State relationship with the guardian).....
7. Occupation and approximate annual income of father.....
8. Occupation and approximate annual income of guardian.....
9. Source of maintenance while a student.....
10. What University examination appeared (state name of college and roll number).....
11. What University examinations passed.....
    (*a*) In what division.....
    (*b*) From what college.....
    (*c*) In what year.....
    (*d*) From what University.....
    (*e*) In which of the subjects (Physics, Chemistry, Mathematics, Botany, Zoology) have you appeared or passed the Intermediate Examination in Science or the Bachelor of Science. { ....
12. What is your University registration number.....
13. Did you apply for admission in any previous year? If so, quote the registration number of your application with dates.....

    .....

We hereby certify that the above statement of particulars is true.

Signature of applicant.....

Address.....

Signature of the guardian.....

Address.....

Date.....

N.B.—Any candidate who has—

(*i*) endeavoured to enlist for his candidature the support of persons of influence or of Government Officials,

(*ii*) personally canvassed any member of the Selection Committee or on whose behalf anyone else has canvassed any such member,

(*iii*) produced any letter of recommendation other than certificates from teachers or testimonials from persons under whom he has actually been employed,

shall be held to be disqualified for admission into the Medical College.

T. C. BOYD, LT.-COL., I.M.S.,

Principal, Medical College, Calcutta.

Dacca Division.

Dacca, the 15th April 1937.

The undermentioned candidates are declared to have passed the Guru Training Examination held in January 1937:—

(The asterisk prefixed to the name of the candidate indicates that he has passed in the optional subject English.)

FIRST DIVISION.

(In order of merit.)

Faridpur Guru Training School.

1 Muzaffar Ahmed.

Patuakhali Guru Training School.

2 Sudhangshu Bhusan Roy.

Mymensingh Guru Training School.

3 Basanta Kumar Gope.

Madaripur Guru Training School.

4 *Maulvi Abdul Matin.
5 Aftabuddin Ahmed.

Faridpur Guru Training School.

6 *Brajendra Lal Biswas.

Munshiganj Guru Training School.

7 Jagadish Chandra Sarkar.

Patuakhali Guru Training School.

*Serajullah.

Munshiganj Guru Training School.

8 Gostalal Sutradhar.

Patuakhali Guru Training School.

9 Faslul Karim.

Kishoreganj Guru Training School.

Md. Abdur Rahim Bhuian.

Faridpur Guru Training School.

10 Krishna Lal Ghosh.

Patuakhali Guru Training School.

Kazem Ali Nakib.
11 *Asmat Ali Khan.

Munshiganj Guru Training School.

12 Parikshit Chandra Bhowal.

Mymensingh Guru Training School.

*Debendra Kishore Dhar.

Faridpur Guru Training School.

Md. Abdul Kayum Mian.

Sagardi Guru Training School.

Lehajuddin Khan.

Birisiri Guru Training School.

13 Brajendra Nath Biswas.

Tangail Guru Training School.

Makhan Lal Das.

Mymensingh Guru Training School.

14 Nirode Chandra Bhattacharji.

Faridpur Guru Training School.

15 Khandakar Abdul Gafur.
16 Kali Prasad Baidya.
*A. K. Md. Idris.
17 *Satya Bhusan Saha.
*Bhajahari Kunda.
18 *Manindra Lal Lahiri.
19 Atul Chandra Saha.

Munshiganj Guru Training School.

Serajul Haque.

Mymensingh Guru Training School.

20 Basanta Kumar Aditya.

Birisiri Guru Training School.

Makhan Lal Saha.

Faridpur Guru Training School.

21 *Abdul Khaleq.

Sagardi Guru Training School.

22 Parikshit Chandra Pal.

Patuakhali Guru Training School.

Md. Ismail.

Raipura Guru Training School.

23 *A. K. Md. Altamesh.

Birisiri Guru Training School.

*Abdul Aziz Khan.

Munshiganj Guru Training School.

24 Md. Hossain Ali.

Madaripur Guru Training School.

25 *Sarat Chandra Mitra.

Munshiganj Guru Training School.

26 Maniruddin Mia.
Hara Lal Saha.

Birisiri Guru Training School.

Ram Chandra Sil.

Faridpur Guru Training School.

Mofazzal Hussain Biswas.

Raipura Guru Training School.

27 *Md. Shafiqur Rahman Bhuian.

Faridpur Guru Training School.

Nural Haque Mia, II.

Patuakhali Guru Training School.

*Surendra Nath Roy.

Madaripur Guru Training School.

28 *Kazi Ahsanullah.
Md. Ismail Sharif.

Patuakhali Guru Training School.

Md. Ishaque.

Munshiganj Guru Training School.

29 Kamini Mohan Bhowal.

Raipura Guru Training School.
*Mahiuddin Ahmed.

Kishoreganj Guru Training School.
30 Md. Abdul Majid Bhuian.

Sagardi Guru Training School.
*Sudhangsu Kumar Ganguly.

Dacca Guru Training School.
31 Habibur Rahman Bhuian.

Faridpur Guru Training School.
Khalilur Rahman Mia.

Patuakhali Guru Training School.
*Khirode Chandra Das.

Mymensingh Guru Training School.
32 Md. Jahiruddin Mia.

Patuakhali Guru Training School.
*Surendra Nath Sil.

Madaripur Guru Training School.
*Manmohan Kar.

Sagardi Guru Training School.
33 *Jagat Bandhu Majumdar.

Dacca Guru Training School.
34 *Surendra Chandra Pal.

Birisiri Guru Training School.
Md. Sayed Ali.

Mymensingh Guru Training School.
35 Bhupendra Chandra Das.

Munshiganj Guru Training School.
36 *Harish Chandra Das.

Bandhura Guru Training School.
37 Joyedur Rahman.

Birisiri Guru Training School.
*Nihar Chandra Biswas.

Mymensingh Guru Training School.
38 Abu Nasar Md. Bazlur Rahman.

Kishoreganj Guru Training School.
Brajendra Chandra Saha Roy.

Bandhura Guru Training School.
39 Vincent Gomes.

Madaripur Guru Training School.
*Hafez Ahmed.

Raipura Guru Training School.
40 *Bhuban Mohan Das.

Mymensingh Guru Training School.
Purna Chandra Nandi.

Faridpur Guru Training School.
Mir Hashem Ali.

Munshiganj Guru Training School.
41 Abu Bakar Mia.

Faridpur Guru Training School.
*Mohan Lal Sarkar.

Madaripur Guru Training School.
*Rati Kanta Roy.

Sagardi Guru Training School.
Abdul Karim Mia.

Raipura Guru Training School.
42 *Md. Ramzan Ali.

Jamalpur Guru Training School.
43 Nityananda Das.
44 Md. Abdul Majid.

Birisiri Guru Training School.
Ram Narayan Das.

Munshiganj Guru Training School.
45 *Md. Muslem Khan.

Madaripur Guru Training School.
*Anath Bandhu Barman.

Dacca Guru Training School.
46 *Dhirendra Chandra Ghosh.

Sagardi Guru Training School.
*Janardan Chakravarty.

Jamalpur Guru Training School.
47 *Sekandar Ali Khan.

Medua Guru Training School.
Subal Chandra Nath.

Mymensingh Guru Training School.
48 Harendra Chandra Pandit.

Dacca Guru Training School.
49 *Bidhu Bhusan Chakravarty.

Patuakhali Guru Training School.
50 Hafizuddin Mia.

Munshiganj Guru Training School.
51 Prasanna Kumar Das.

Patuakhali Guru Training School.
Abdul Karim.
52 Md. Abdul Majid Khan.

Dacca Guru Training School.
53 *Chand Mohan Das.

Munshiganj Guru Training School.
*Suresh Chandra De.

Kishoreganj Guru Training School.
Upendra Chandra Pandit.

Raipura Guru Training School.
54 *Subal Ranjan Das.

Mymensingh Guru Training School
Ramani Mohan Debnath.

SECOND DIVISION.

Dacca Guru Training School.

1 *Tamizul Islam.
2 *Gajendra Ch. Baral.
3 *Khabiruddin Khan.
4 Md. Rokat Ali.
5 Md. Asmat Ali.
6 *Jatindra Mohan Das.
7 *Sarat Chandra Bhadra.
8 Ramani Mohan De.
9 *Jinnat Ullah.
10 Md. Sabed Ali Khan.
11 Md. Serajuddin.
12 Abdul Gafur.
13 Sadat Ali Khan.
14 *Mohan Lal Das.
15 Md. Abdul Hakim.
16 Abdus Sobhan Darzi.
17 *Md. Jinnat Ali.
18 *Parimal Chandra Das.
19 Md. Eakub Ali.
20 Jogendra Mohan Majumdar.
21 Ichhamuddin Kazi.
22 Naib Ali.
23 *Md. Sahebuddin Khan.
24 *Abani Kumer Sirkar.
25 Radha Shyam Das.
26 *Hari Mohan Das.
27 *Md. Altafuddin.
28 *Abdul Mannan Laskar.
29 Abdul Majid.
30 *Md. Abdus Subhan Khan.

Munshiganj Guru Training School.

1 Chandra Mohan Das.
2 Matab Lal Das.
3 *Mono Ranjan De.
4 *Ahmed Ali.
5 Radha Ballav Das.
6 *Abdul Mannan.
7 *Tamizuddin Mia.
8 Fazlul Karim.
9 *Gopal Krishna Das.
10 *Basiruddin.
11 *Shamsuddin Ahmed.
12 Chitta Ranjan De.
13 Shyam Lal Saha.
14 *Nagarbashi Mitra Banikya.
15 Shamsul Haq Bhuian.
16 Ramizul Haque.
17 *Besanti Palma.
18 Nasiruddin Ahmed.
19 *Aflatoon Dhali.
20 *Ambar Ali.
21 *Md. Sultan.
22 *Radha Ballav Rudra Pal.
23 *Jaladhar Chakravarty.
24 Abdur Rahman.
25 *Abdus Sobhan Bhuian.
26 *Md. Abdul Bari.
27 Tamizuddin.
28 Abdul Karim Mia.
29 Md. Ijjat Ali (private).
30 Rajendra Chandra Nandi (English only).

Raipura Guru Training School.

1 Azimuddin Ahmed.
2 Mamtazuddin Ahmed.
3 *Md. Basiruddin Akon.
4 *Krishna Kumer Das Bhoumik.
5 Md. Halaque Chan.
6 Aftabuddin Ahmed.
7 Syed Serajul Haq.
8 *Md. Mujaffar Ali.
9 Md. Helaluddin.
10 Md. Ismail.
11 Md. Shuruz Ali.
12 *Md. Anwaral Haq.
13 *Md. Azhar Mia.
14 *Mahendra Chandra Chanda Bhoumik (private)
15 Ataur Rahman (English only).

Manikganj Guru Training School.

1 Suresh Chandra De.
2 *Amrita Lal Adhikari.
3 Shyama Kanta Roy.
4 Nani Mohan Ghosh.
5 *Sudhir Chandra Chakravarty.
6 *Basiruddin Dewan.
7 *Musharraf Ali Chaudhury.
8 Girish Chandra Sirkar.
9 *Md. Shamsuddin.
10 Minhazuddin.
11 Phanindra Nath De Sirkar.
12 Jagat Bandhu Singha.

Bandhura Holy Family Guru Training School.

1 Thakur Das Baishnab.
2 Sachindra Kumer Das Gupta.
3 Gagan Chandra Sil.
4 Kafiluddin Ahmed.
5 Anthony J. Rithchil.
6 Clement Mankin.
7 Abdus Sobhan.
8 Md. Shamsheruddin Khan.
9 Sachindra Makhal.

Mymensingh Guru Training School.

1 Sam Samuddin Md. Ismail.
2 Enayet Hussain.
3 Paresh Chandra Pal.
4 Dharani Kanta Bhadra.
5 Shah Md. Abdul Hakim.
6 Md. Guney Ali.
7 Nishi Kanta Neogi.
8 Jatindra Mohan Sirkar.
9 *Talimuddin Ahmed.
10 Md. Abdul Ali.
11 *Md. Sowab Ali Bhuian.
12 Faziluddin Ahmed.
13 *Md. Hydar Rahman.
14 Md. Lutfar Rahman.
15 Md. Sadat Ali Bhuian.
16 Md. Imam Hussain.
17 Mahiuddin Ahmed.
18 Md. Sulaiman.
19 *Srihari Ranjan Majumdar.
20 Md. Ismail, I.
21 A. K. Mominuddin Ahmed.
22 *Md. Wahed Ali Akanda.
23 Md. Habibullah.
24 Md. Tayyib Ali Khan.
25 Md. Ismail, II.
26 Md. Mir Hussain.
27 Md. Ilahi Newaj.
28 Md. Abdul Hakim.
29 Md. Imanuddin Bhuian.
30 Md. Mafizuddin.

Jamalpur Guru Training School.

1 *Md. Serajul Islam.
2 Sahedullah Ahmed.
3 *Md. Kasimuddin.
4 *Md. Abdul Ghani.
5 Syedur Rahman Talukdar.
6 *Rajendra Chandra De.
7 Mujaffaruddin Ahmed.
8 Md. Golam Hussain.
9 *Golam Sarwar Khan.
10 *Ramesh Chandra Roy.
11 Md. Tafazzal Hussain.
12 Jinnat Ullah Mandal.
13 *Mir Abdur Razzak.
14 Madhusudan De.
15 *Md. Yeakub Ali Khan.
16 Mazammal Haq.
17 Md. Eakub.
18 Makbul Ahmed (private).

Kishoreganj Guru Training School.

1 Md. Safiruddin.
2 Md. Ataul Haq.
3 Munshi Mafizuddin Ahmed.
4 *Sayanuddin Ahmed.
5 *Muslimuddin Ahmed.
6 *Md. Abdul Majid.
7 Munshi Mafizuddin Khan.
8 *Md. Amiruddin Bhuian.
9 Narendra Kishore Sirkar.
10 Lal Mohan Das.
11 Md. Abdul Bari Khan.
12 Md. Abdul Halim.
13 Khursheduddin Ahmed.
14 Gabinda Chandra Debnath.

Tangail Guru Training School.

1 Bijoy Gobinda Sirkar.
2 Abdul Hamid Mia.
3 *Nrishingha Kumar Dutta.
4 *Md. Bahaqddin.
5 *Nijamuddin.
6 *Abdur Raihan Mia.
7 *Paresh Chandra Poddar.
8 Md. Hussain Ali Mia.
9 *Mafeluddin Mia.
10 Md. Torap Ali.
11 Krishna Madhab Pal.
12 Md. Mozammel Haq.
13 *Mahiuddin Ahmed.
14 *Md. Safiuddin.
15 Kh. Md. Hussain Ali.
16 Hussain Ali Mia
17 Kh. Chand Mohmmed.
18 *Radhikalal Goswami.
19 Jitendra Mohan Bose.
20 Hatem Ali Talukdar (private, English only).

Birisiri Guru Training School.

1 *Md. Abdul Gafur.
2 Dharani Kanta Das.
3 *Khursheduddin Khan.
4 Biswa Nath Sangma.
5 Chitta Ranjan Singha.
6 *Ramani Bhusan Ray.
7 *Dinesh Chandra De.

Faridpur Guru Training School.

1 Md. Abdul Gafur, I.
2 Nurul Haq Mia, I.
3 Abdur Rashid Khan.
4 Mahendra Nath Biswas.
5 Kazi Abdul Majid.
6 Kabiruddin Ahmed.
7 Shamsul Haq Howladar.
8 Daliluddin Howladar.
9 *Imam Hussain Khan.
10 Mukunda Lal Biswas.
11 *Khabiruddin Ahmed.
12 *Asim Ali Mia.
13 Aktaruddin Ahmed.
14 *Khandakar Elajuddin.
15 *Abul Kasem Mia.
16 Makbul Ahmed Khan.
17 Abdus Sattar Sirkar.
18 Jatindra Mohan Sarkar.
19 *Md. Abdul Latif.
20 *Panchanan Biswas.
21 Mohmmud Ali Bakwal (private).

Madaripur Guru Training School.

1 *Md. Ataur Rahman.
2 Abdul Ali Rari.
3 Md. Aftabuddin.
4 Khandakar Abdur Razzak.
5 Abdur Rashid.
6 Haralal Guha Thakurta.
7 Jnanendra Nath Mandal.
8 Ananta Kumar Aich.
9 Md. Joynal Abedin.
10 *Kiran Chandra Ray.
11 *Judhisthir Ratna.
12 *Gopal Chandra Debnath.
13 Rajendra Lal Das.
14 Abdul Motaleb.
15 Md. Nazem Ali.
16 Jalaluddin Ahmed.
17 Bhabaranjan Das (private).
18 Md. Amjad Ali (English only).

Sagardi Guru Training School.

1 Monohar Bhattacharjee.
2 *Daliluddin Sardar.
3 Haripada Mukherjee.
4 *Surendranath Debnath.
5 Abdul Hamid.
6 *Ramesh Chandra Haldar.
7 *Taleb Hussain Molla.
8 Md. Ataharuddin Molla.
9 *Abdur Rahman Mia.
10 Bhubaneswar Chakravarty.
11 *Jajneswar Ray.
12 *Shashi Bhusan Ray.
13 *Bepin Bihari Baidya.
14 *Gopal Krishna Mandal.
15 *Ram Charan Banik.
16 Shafiuddin Ahmed.
17 *Md. Obayed Ulla Patwari.
18 *Azhar Sardar.
19 Abdul Mannan.
20 *Abdul Wahab.
21 *Kartik Chandra Biswas.
22 *Ramesh Chandra Das.
23 *Ananta Kumar Chatterjee.
24 *Satish Chandra Haldar.
25 Md. Rajjab Ali.
26 Md. Kasem Ali Hawladar.
27 *Md. Yeakub Ali.
28 Surendra Nath Biswas.
29 *Md. Tafizuddin Akon.
30 *Mozharuddin.
31 Md. Shamsul Haq.
32 *Md. Belayet Hussain.
33 *Bimal Chandra Biswas.
34 *Md. Kasem Ali.
35 Surendra Nath Parai.
36 Altafuddin.
37 Munshi Rahim Baksh (private).
38 Yeakub Ali Molla (English only).
39 Hussain Ali Howladar (English only).

Patuakhali Guru Training School.

1 Abdul Khaleq.
2 Abdul Mannan.
3 Abdus Salam.
4 Abdus Sattar.
5 Akram Ali.
6 Binode Bihari Mistri.
7 Fazlul Haq.
8 Hafizuddin Khan.
9 Hamizuddin.
10 Hemayetuddin Ahmed.
11 Mafizuddin.
12 Md. Arshed Ali.
13 Md. Azharuddin.
14 Md. Bazlul Haq.
15 Md. Yeakub.
16 *Md. Hafizullah.
17 Md. Hashem Chaudhury.
18 Md. Ishaq Ali Howladar.
19 Md. Ishaq Molla.
20 Md. Moslem Ali Khan.
21 Md. Safiqullah.
22 Mir Abdul Majid.
23 Motahar Ali.
24 Nur Mohammad.
25 Shashi Bhusan Mridha.
26 Sultan Ahmed Khan.
27 Surya Kumar De.
28 *Tazem Ali Molla.
29 Upendra Kumar Nath.
30 Abdul Aziz Akon.
31 Azhar Ali.
32 Md. Hanif.
33 Mazibul Haque.
34 Md. Haydar Ali (private).
35 Debendra Nath Haldar (English only).

Medua Guru Training School.

1 Abdul Jabbar.
2 Md. Fazle Ali.
3 *Bagala Prasanna Datta Mazumdar.
4 Md. Nuru Haq.
5 Md. Nader Ali Khan.
6 Rajendra Chandra Das.
7 Abdul Hashem.
8 *Motahar Ali.
9 Shamsul Haq.
10 Md. Abdur Rahim.
11 Majibal Haque, I.
12 Chinta Haran Sil.
13 Abala Charan De.
14 *Abdul Aziz, I.
15 *Mir Md. Hashem.
16 Tarini Kumar De.
17 Md. Azhar.
18 *Md. Abdul Wahab.
19 *Sadat Ali Bhuiyan.
20 Md. Nader Ali.
21 Md. Osman Ali.
22 Md. Chanda Mia.
23 Abul Hashem.
24 Haralal Chakravarty (private).
25 Md. Ismail (private).

K. D GHOSH,
Inspector of Schools, Dacca Division

Calcutta University.

Senate House, the 12th April 1937.

NOTIFICATION No. Misc. R.35.

The following changes in the Regulations sanctioned by the Government of Bengal (Ministry of Education) are notified for general information:—

The existing syllabus of studies in Pali as given in Chapter XXXIII of the Regulations for the M.A. Examination be replaced by the following:—

1. The M.A. course in Pali shall comprise the following five groups:—

A. Literature.
B. Philosophy and Religion.
C. Epigraphy and History.
D. Mahayana Literature and Philosophy.
E. Art and Iconography.

2. There shall be eight papers, each carrying 100 marks. The papers shall be distributed as follows:—

(i) Compulsory:—

(I) Select portions of Buddhist Sutras (Pali and Sanskrit) with or without commentaries.

(II) Select portions of the Vinaya and Ecclesiastical Chronicles.

(III) Select portions of the Buddhist Philosophical Works (Pali and Sanskrit).

(IV) Language and Literature.

(V) History and Geography (with special reference to the original texts).

(ii) Special:—

Besides the five Compulsory Papers, candidates will have to select one of the following groups:—

Group A (Literature).

(VI) Special Jatakas and Avadanas and select texts of Folk Literature.

(VII) Select poetical pieces and extra-canonical texts (Prose and Poetry).

(VIII) Comparative study of allied Indian Literature and Essay.

Group B (Philosophy and Religion).

(VI) Special Philosophical texts from Pali Literature.

(VII) Special Philosophical texts from Buddhist Sanskrit Literature and other Sanskrit texts dealing with Buddhist Philosophy.

(VIII) Comparative Studies in Indian Philosophy and Essay.

Group C (Epigraphy and History).

(VI) Special Buddhist Historical texts, Archaeological Reports and Records of Buddhist Pilgrims.

(VII) Select Prakrit Inscriptions.

(VIII) Select Sanskrit Inscriptions and Essay.

Group D (Mahayana Literature and Philosophy).

(VI) Select Sanskrit Sutras and Poetical Works.

(VII) Special Philosophical and Tantra texts.

(VIII) Buddhism outside India and Essay.

Group E (Art and Iconography).

(VI) Select Buddhist and other Indian texts dealing with Architecture Sculpture and Painting.

(VII) Select Buddhist Monuments, Reliefs, Images and Frescoes.

(VIII) Buddhist Art in its origin and development in and outside India and Essay.

3. Students shall be expected to be able to read Buddhist texts in Sinhalese, Siamese and Burmese characters.

The changes will come into operation with effect from the Examination in 1939.

J. CHAKRAVORTI, *Registrar.*

Electric Licensing Board, Bengal.

1, Haris Mukerji Road, Elgin Road post office, Calcutta, the 16th April 1937.

Examinations for Electrical Supervisors and Workmen.

It is notified for general information that examinations for Supervisors' Certificates of Competency and Electrical Workmen's Permits will be held in Calcutta, commencing from the 3rd May 1937. The place, dates and hours of the examinations will be communicated to the candidates eligible to sit for the examinations.

Examinations for Supervisors' Certificates of Competency and Electrical Workmen's Permits will also be held in Calcutta during the first week of June 1937. Candidates for admission to this examination must apply to the Secretary in the prescribed form duly filled in on or before the 8th May 1937.

Prescribed forms and other particulars may be obtained from the Secretary on application.

The place, dates and hours of examinations for the June examination will be communicated to the candidates eligible to sit for the said examination.

N. N. SEN GUPTA,
Secretary, Licensing Board, Bengal.

Registered No. C207

The Calcutta Gazette

THURSDAY, APRIL 22, 1937.

PART II

Advertisements.

Notices.

Advertisements, Notices, etc., intended for insertion in this part of the Gazette must be sent to Press before 12 noon on Saturday, and all costs deposited and proofs returned by 4 p.m. on Monday. Manuscripts and postal remittances must be addressed to Superintendent, Government Printing (Publication Branch), Bengal Government Press, Alipore.

For the convenience of advertisers located in Calcutta, arrangements have been made to accept advertisements and prepayment of charges at Sales Office, Ground Floor, Writers' Buildings, Calcutta. The latest time for receipt of advertisements for current week's Gazette has been extended till 4 p.m. on Mondays.

In the High Court of Judicature at Fort William in Bengal, in Insolvency.

NOTICE OF ADJUDICATION ORDER.

No. 28 of 1937.

Re Edward D'Rozario, residing and carrying on business at No. 36, Mott Lane, in the town of Calcutta, under the name and style of Dalhousie Printing Press, trader, ex parte the debtor.

Messrs. S. C. Dhar & Co., debtor's solicitors.

ON the 7th day of April 1937, an order was made by the High Court of Judicature at Fort William in Bengal in its insolvency jurisdiction adjudging the abovenamed as an insolvent.

Note.—All debts due to the estate should be paid to me.

Dated this 15th day of April 1937.

S. C. H. MEYER, Official Assignee.

In the High Court of Judicature at Fort William in Bengal, in Insolvency.

NOTICE OF ADJUDICATION ORDER.

No. 30 of 1937.

Re Ashutosh Laha, residing at No. 5, Bhola Nath Kundu Lane, in the town of Calcutta, an employee of Messrs. London and Lancashire Insurance Co., Ltd., of No. 2, Fairlie Place, Calcutta, ex parte the debtor in person.

ON the 9th day of April 1937 an order was made by the High Court of Judicature at Fort William in Bengal in its insolvency jurisdiction adjudging the abovenamed as an insolvent.

Note.—All debts due to the estate should be paid to me.

Dated this 15th day of April 1937.

S. C. H. MEYER, Official Assignee.

In the High Court of Judicature at Fort William in Bengal, in Insolvency.

NOTICE OF ADJUDICATION ORDER.

No. 32 of 1937.

Re Bajranglal Nemani, residing at No. 29, Zackaria Street, in the town of Calcutta, landholder, ex parte the debtor.

M. K. Bose, debtor's solicitor.

ON the 12th day of April 1937 an order was made by the High Court of Judicature at Fort William in Bengal in its insolvency jurisdiction adjudging the abovenamed as an insolvent.

Note.—All debts due to the estate should be paid to me.

Dated this 15th day of April 1937.

S. C. H. MEYER, Official Assignee.

In the High Court of Judicature at Fort William in Bengal, in Insolvency.

NOTICE OF ADJUDICATION ORDER.

No. 33 of 1937.

Re Biswanath Mukherjee, residing at No. 8B, Dinabandhu Lane, in the town of Calcutta, of no occupation, ex parte the debtor.

Messrs. Bhattacharyya and Sil, debtor's solicitors.

ON the 12th day of April 1937 an order was made by the High Court of Judicature at Fort William in Bengal in its insolvency jurisdiction adjudging the abovenamed as an insolvent.

Note.—All debts due to the estate should be paid to me.

Dated this 15th day of April 1937.

S. C. H. MEYER, Official Assignee.

In the High Court of Judicature at Fort William in Bengal, in Insolvency.

No. 170 of 1932.

Re Estate John Frederick Herbert.

NOTICE is hereby given that a dividend is intended to be declared in the above estate. Persons claiming to be creditors of the above estate are hereby required to file their claims by affidavit supported by vouchers on or before the 15th May 1937, after which date no claims received by the undersigned will be considered.

Creditors who have already lodged their claims need not file fresh claims.

A form of proof of debt may be had on application from the undersigned.

S. C. H. MEYER, Official Assignee.

10, Old Post Office Street, Calcutta,
The 15th April 1937.

(830—1)

In the Court of the Sub-Judge, Rangpur.

OTHER EXECUTION CASE No. 561 OF 1936

Tarapada Chatterjee, decree-holder, of Saidpur, police-station Saidpur, district Rangpur,

versus

Rambishnu Kurmi and others of Kaya known as Kangalipara, police-station Saidpur, district Rangpur, judgment-debtors.

Date for sale—3rd May 1937.

Schedule No. 1.

IN the district of Rangpur, police-station Saidpur, of mauza Koya under the zemindar Raja Gopal Lal Roy Bahadur at present Babu P. C. Nahata and others, in the name of Hitan Lal Mistri for a tenure kayami mokorari jote, comprising 1 bis 1 don 7 kalis 10 gandas of land at a rental of Rs. 12-3-9p., 3 dones of land at a rental of 15 as. 3 p. and in the name of Birshadu Kabiraj for 1 done of land at a rental of 8 as. out of 1 bis 9 kalis 7 gandas at a rental of Rs. 18-0-9p. Approximate value is Rs. 200.

Schedule No. 2.

In the district of Rangpur, police-station Saidpur, of mauza Koya under the aforesaid landlords, a tenure consisting of 19 dones of land at a rental of Rs. 14-4 out of 1 bis 11 dones 6 kalis at a rental of Rs. 23-7-9 in the name of Jan Mamud and 9 dones of land at a rental of Rs. 9 out of 1 bis 8 kalis 17 gandas at a rental of Rs. 20-11-6 in the name of Gul Mamud and 3 dones 8 kalis of land at a rental of Rs. 7 in the name of Gul Mamud. Approximate value is Rs. 200.

Schedule No. 3.

In the district, police-station and mauza as aforesaid under Namer Uddin Chowdhury and others, tenure 14 kalis of land at a rental of 9 as. 6p. in the name of Gul Mamud. Approximate value is Rs. 25.

Schedule No. 4.

In the district, police-station and mauza as aforesaid under Raja Gopal Lal Roy Bahadur at present Puran Chand Nahata, tenure 6 dones 8 kalis of land at a rental of Rs. 4-7-9 out of 3 bis 5 dones 14 kalis 11 gandas at a rental of Rs. 44-13-8 gandas in the name of Kudrutulla, 1 done 8 kalis of land at a rental of Rs. 1-15-3 out of 15 dones 12 kalis 5 gandas at a rental of Rs. 15-15-3 in the name of Gul Mamud and 3 dones 2 kalis of land at a rental of Rs. 2-8-3 out of 2 bis 1 done 11 kalis 7 gandas at a rental of Rs. 33-2-6 in the name of Jan Mamud. Approximate value is Rs. 200.

Schedule No. 5.

In the district, police-station, mauza and malik as aforesaid, 2 dones 4 kalis of land at a rental of Rs. 1-8 out of 1 bis 19 dones 1 kali at a rental of Rs. 26-4-6 in the name of Churmutu and Jenat Ulla. Approximate value is Rs. 200.

Schedule No. 6.

Buildings situated on property No. 5 as said before:—

1. Brick wall and C. I. roofed house, 22″×60″—Cook-shed, latrine, well, six sets. Approximate value is Rs. 200.
2. Two-storied C. I. roofed house with brick wall, 38×25 cubits. Approximate value is Rs. 400.
3. Sitting room—brick walls, pucca roof, 24×7 cubits. Approximate value is Rs. 400.
4. House, C. I roof, 16×7 cubits. Approximate value is Rs. 250.
5. House, C. I. roof, 17×7 cubits. Approximate value is Rs. 250.
6. House, C. I. roof, 23×9 cubits. Approximate value is Rs. 300.
7. House with brick walls, tile roofed, 26×12 cubits. Approximate value is Rs. 1,000.
8. House, with brick walls, tile roofed, 27×12 cubits. Approximate value is Rs. 1,500.
9. Gate with room, pucca walls and roof, 12×8 cubits. Approximate value is Rs. 500.
10. House, C. I. roofed, 12×7 cubits. Approximate value is Rs. 25.
11. House with tiled roof, Sal post, pucca floor, bamboo walls, 16×12 cubits. Approximate value is Rs. 250.
12. House with tiled roof, Sal post, pucca floor, bamboo walls, 10×8 cubits. Approximate value is Rs. 175.
13. House with tiled roof, Sal post, pucca floor, bamboo walls, 12×9 cubits. Approximate value is Rs. 175.
14. House with tiled roof, Sal post, pucca floor, bamboo walls, 12×9 cubits. Approximate value is Rs. 175.

M. P. SINHA, Sub-Judge.

Rangpur, the 15th April 1937.

(819—1)

In the Court of the Sub-Judge at Asansol.

INSOLVENCY CASE No. 6 OF 1937.

Kenoo Lal Mistri of Asansol, petitioner.

TAKE notice that the abovenamed petitioner has been adjudged insolvent on 10th March 1937 and that he has been directed to apply for discharge within one year from that date.

J. P. BANERJEA, Sub-Judge.

Asansol, the 10th April 1937. (820—1)

In the Court of the District Judge of Bankura.

NOTICE is hereby given under clause (2) of section 19 of the Provincial Insolvency Act, V of 1920, to his creditors that the insolvency petition of Pramatha Nath Das of Bankura town has been admitted by this Court as No. 3 of 1937 and that 28th May 1937 has been fixed for hearing thereof.

G. BANARJI, District Judge.

Bankura, the 10th April 1937. (808—1)

NOTICE TO CREDITORS OF THE DATE OF HEARING OF AN INSOLVENCY PETITION.

Section 19 of the Provincial Insolvency Act, V of 1920.

In the Court of the District Judge at Chittagong.

INSOLVENCY APPLICATION No. 5 OF 1937.

WHEREAS debtor Banish Chandra De, son of late Kailash Chandra De, of Hinguli, police-station Mirsarai, district Chittagong, has applied to this Court, by a petition, dated 10th day of March 1937, to be declared an insolvent under the Provincial Insolvency Act, V of 1920, and this is to give notice that the Court has fixed the 5th day of May 1937 for the hearing of the aforesaid petition and the examination of the debtor.

S. K. DEY, for District Judge.

(802—1)

NOTICE TO CREDITORS OF THE DATE OF HEARING OF AN INSOLVENCY PETITION.

Section 19 of the Provincial Insolvency Act, V of 1920.

In the Court of the District Judge at Chittagong.

INSOLVENCY APPLICATION No. 6 OF 1937.

WHEREAS debtor Emdad Mia, son of late Homar Ali, of East Barghona, police-station Banskhali, post office Jaldi, district Chittagong, has applied to this Court, by a petition, dated the 18th day of March 1937, to be declared an insolvent under the Provincial Insolvency Act, V of 1920, this is to give notice that the Court has fixed the 8th day of May 1937 for the hearing of the aforesaid petition and the examination of the debtor.

U. C. MAJUMDAR, for District Judge.

Chittagong, the 8th April 1937. (810—1)

NOTICE TO CREDITORS OF THE DATE OF HEARING OF AN INSOLVENCY PETITION.

Section 19 of the Provincial Insolvency Act, V of 1920.

In the Court of the District Judge at Chittagong.

INSOLVENCY APPLICATION No. 7 OF 1937.

WHEREAS creditor Rahimdad Chowdhury, son of late Nuraddin Chowdhury, of Ujanteia, police-station Chakaria, district Chittagong, has applied to this Court, by a petition, dated the 2nd day of April 1937, to have Babu Mahim Chandra Guha Deb Burman, son of late Sarat Chandra Guha Deb Burman, of Chandanpura, district Chittagong, debtor, declared insolvent under the Provincial Insolvency Act, V of 1920, and this is to give notice that the Court has fixed the 18th day of May 1937 for the hearing of the aforesaid petition and the examination of the petitioning creditor.

H. G. WAIGHT, District Judge.

Chittagong, the 15th April 1937. (827—1)

In the Court of the Addl. District Judge, Faridpur.

INSOLVENCY CASE Nos. 71 AND 72 OF 1932.

(1) Umacharan Debnath and (2) Radhika Mohon Debnath, sons of Ram Chandra Debnath, of Panditsar, police-station Naria, district Faridpur.

NOTICE is hereby given that the adjudication orders of the abovementioned cases, dated 18th August 1933, have been annulled by an order of this Court, dated 10th April 1937.

R. A. DUTCH, Addl. District Judge.

Faridpur, the 15th April 1937. (813—1)

In the Court of the District Judge of Jessore.

INSOLVENCY CASE No. 10 OF 1937.

NOTICE is hereby given to the creditors that Kshitish Chandra Nandi, son of late Dina Nath Nandi, of village Karimali, police-station Jhinkergacha, district Jessore, filed a petition in this Court on 31st March 1937, which was numbered as case No. 10 of 1937, and that the 1st day of May 1937 has been fixed for hearing of the said case.

B. N. CHAKRAVARTY, District Judge.

Jessore, the 9th April 1937. (809—1)

In the Court of the District Judge of Murshidabad.

INSOLVENCY CASE No. 7 OF 1937.

In the matter of Debidas Choudhury, son of late Barunlal Choudhury, of Niallishpara, police-station Berhampore Town, district Murshidabad, debtor-petitioner.

NOTICE is hereby given to all concerned that the abovenamed debtor has applied to this Court for being adjudged an insolvent, and that the 24th day of April 1937 has been fixed for the hearing of his application.

K. K. HAJARA, District Judge.

Berhampore, the 8th April 1937. (801—1)

In the 2nd Court of the Addl. District Judge of Mymensingh.

INSOLVENCY CASE No. 14 OF 1936.

PURSUANT to a petition, dated the 9th day of April 1936, filed by Pratap Chandra Chakrabarty, son of late Iswar Chandra Chakrabarty, of village Bagjurkandi, police-station Katihadi, district Mymensingh, and on the application of the debtor himself and on reading his application and hearing his pleader, it is ordered that the debtor be and the said debtor is hereby adjudged insolvent.

It is further ordered that the debtor do apply for his final discharge within one year from this date.

Dated the 27th day of February 1937.

S. C. DUTT, Addl. District Judge.

(812—1)

In the Court of the District Judge of Hooghly.

NOTICE is hereby given, under clause (2) of section 41 of the Provincial Insolvency Act, V of 1920, to his creditors that the final discharge petition of Sheikh Sadu alias Sadekali, son of late Sheikh Achaladdin, of Subalarah, thana Chanditala, district Hooghly, has been filed in this Court in Insolvency Case No. 44 of 1936, and that the 15th May 1937 has been fixed for the hearing thereof.

S. MUKHERJEE, District Judge.

Chinsura, the 5th April 1937.

(769—1)

In the Court of the Addl. District Judge of Hooghly at Howrah.

NOTICE is hereby given under the Provincial Insolvency Act, V of 1920, to his creditors that the insolvency petition of Subalak Dutta, son of late Gadadhar Dutta, of 15, Mohinathpara Lane, thana Salkia, district Howrah, has been admitted by this Court as No. 8 of 1937 and that the 30th April 1937 has been fixed for the hearing thereof.

T. ROXBURGH, Addl. District Judge.

Howrah, the 12th April 1937. (811—1)

In the Court of the Addl. District Judge of Hooghly at Howrah.

INSOLVENCY PETITION No. 1 OF 1937.

NOTICE is hereby given that Ram Narayan Bajpai, Sew Narayan Bajpai and Prayag Narayan Bajpai, proprietors of the firm Ganga Charan Radha Prasad at Cawnpur, residing at 10, Dharmatalla Road, thana Salkia, district Hooghly, were on the 2nd April 1937 adjudged insolvents and directed to apply for discharge within six months.

T. ROXBURGH, Addl. District Judge.

Howrah, the 15th April 1937.

(822—1)

In the Court of the District Judge of Hooghly.

NOTICE is hereby given, under clause (2) of section 12 of the Provincial Insolvency Act, V of 1920, to his creditors that the insolvency petition of Luxmi Ram Kurmi, son of late Lalji Kurmi, of Bansberia, thana Shibpur, district Hooghly, has been admitted by this Court as No. 31 of 1937, and that the 15th May 1937 has been fixed for the hearing thereof.

S. MUKHERJEE, District Judge.

Chinsura, the 15th April 1937.

(826—1)

In the Court of the District Judge of Hooghly.

NOTICE is hereby given, under clause (2) of section 41 of the Provincial Insolvency Act, V of 1920, to his creditors that the discharge petition of Shambhoo Nath Das, son of late Hari Mohan Das, of Serampore, thana Serampore, district Hooghly, has been filed in this Court in Insolvency Case No. 62 of 1936 and that the 22nd May 1937 has been fixed for the hearing thereof.

S. MUKHERJEE, District Judge.

Chinsura, the 15th April 1937.

(828—1)

In the Court of the District Judge of Rangpur.

INSOLVENCY CASE No. 8 OF 1937.

ON the application of the debtor Bachhu Lal Kurmi, son of late Ramjiban Kurmi, of Lalmonirhat, police-station Lalmonirhat, in Rangpur, for being adjudged an insolvent, the 6th day of May 1937 has been fixed for hearing the aforesaid petition and the examination of the debtor.

S. C. CHAKRABERTY, District Judge.

Rangpur, the 12th April 1937. (806—1)

In the Court of the District Judge of Rangpur.

INSOLVENCY CASE No. 7 OF 1937.

ON the application of the debtor Mati Lal Kurmi, son of late Ramroach Kurmi, of Lalmonirhat, police-station Lalmonirhat, in Rangpur, for being adjudged an insolvent, the 6th day of May 1937 has been fixed for hearing the aforesaid petition and the examination of the debtor.

S. C. CHAKRABERTY, District Judge.

Rangpur, the 12th April 1937. (807—1)

ORDER OF ADJUDICATION.

Section 27 of the Provincial Insolvency Act, V of 1920.

In the Court of the District Judge of Pabna-Bogra.

INSOLVENCY CASES Nos. 19 OF 1936, 20 OF 1936 AND 21 OF 1936.

NOTICE is hereby given that petitioning debtors (1) Radha Charan Das, (2) Satish Chandra Das and (3) Radha Raman Das, sons of late Ram Tanu Das, of Salgaria, police-station and district Pabna, were adjudged insolvents, by an order of this Court, dated the 19th March 1937, and they have been directed to apply for final discharge within a year.

S. C. CHAKRAVERTTI, Sub-Judge,
2nd Court, Pabna, in charge.

Pabna, the 10th April 1937.

(821—1)

ORDER ANNULLING ADJUDICATION.

Section 43 of the Provincial Insolvency Act, V of 1920.

In the 4th Court of the Sub-Judge at Alipore.

INSOLVENCY APPLICATION No. 87 OF 1935.

R. D'Sylva, applicant.

WHEREAS R. D'Sylva of traffic quarters, Belgachia, 24-Parganas, debtor, does not proceed with his application for discharge, it is ordered that the order of adjudication, dated 30th July 1935, against the debtor be and the same is hereby annulled.

Dated this 29th day of January 1937.

T. C. MUKHERJEE, Sub-Judge.

(772—1)

In the 4th Court of the Sub-Judge of 24-Parganas.

INSOLVENCY CASE No. 83 OF 1937.

Shyama Nath Biswas of Gokulpore, police-station Sarupnagore, 24-Parganas, applicant.
To Ram Pujan Misra of 19, Surendra Nath Banerjee Road, Calcutta, and others, creditors.

ON the 3rd day of March 1937 it was ordered that the matter of the petition of the applicant be heard on the 23rd day of April 1937, and that the said applicant do attend to be examined by this Court on that date.

T. C. MUKHERJEE, Sub-Judge.

Alipore, the 11th March 1937.

(773—1)

In the 4th Court of the Sub-Judge of 24-Parganas.

INSOLVENCY CASE No. 103 OF 1937.

Lalit Mohan Gangapadhaya of 46, Lansdowne Road, Ballygunge, Calcutta, applicant.
To Kumar Satya Harsha Ghosal of Bhukailash, Rajbati, Calcutta, and others, creditors.

ON the 13th day of March 1937 it was ordered that the matter of the petition of the applicant be heard on the 30th day of April 1937, and that the said applicant do attend to be examined by this Court on that date.

T. C. MUKHERJEE, Sub-Judge.

Alipore, the 15th March 1937.

(774—1)

In the 4th Court of the Sub-Judge of 24-Parganas.

INSOLVENCY CASE No. 104 OF 1937.

Chedi Methor and Gherao Methor of 6, Garcha 1st Lane, Ballygunge, Calcutta, applicants.
To Bhagobaty Sha of 63, Hazra Road, Calcutta, and others, creditors.

ON the 13th day of March 1937 it was ordered that the matter of the petition of the applicants be heard on the 30th day of April 1937, and that the said applicants do attend to be examined by this Court on that date.

T. C. MUKHERJEE, Sub-Judge.

Alipore, the 15th March 1937.

(775—1)

In the 4th Court of the Sub-Judge of 24-Parganas.

INSOLVENCY CASE No. 107 OF 1937.

H. Mutsuddi of 69/1, Ekbalpore Road, police-station Watgunge, 24-Parganas, applicant.
To Behary Lal Barua of 5/2, Doctor's Lane, Calcutta, and others, creditors.

ON the 2nd day of April 1937 it was ordered that the matter of the petition of the applicant be heard on the 14th day of May 1937, and that the said applicant do attend to be examined by this Court on that date.

T. C. MUKHERJEE, Sub-Judge.

Alipore, the 3rd April 1937.

(776—1)

In the 4th Court of the Sub-Judge of 24-Parganas.

INSOLVENCY CASE No. 113 OF 1937.

Bedeshi Sha of 201, Manicktola Main Road, police-station Beliaghata, 24-Parganas, applicant.
To Dew Karan Jhunjhunwala of 46/1, Strand Road, Calcutta, and others, creditors.

ON the 22nd day of March 1937 it was ordered that the matter of the petition of the applicant be heard on the 7th day of May 1937, and that the said applicant do attend to be examined by this Court on that date.

T. C. MUKHERJEE, Sub-Judge.

Alipore, the 30th March 1937.

(777—1)

In the 4th Court of the Sub-Judge of 24-Parganas.

INSOLVENCY CASE No. 115 OF 1937.

Monjoor Hossain Mia of Joychandipore, Budge Budge, 24-Parganas, applicant.

To Sabdul Sardar of Joychandipore, Budge Budge, 24-Parganas, and others, creditors.

ON the 23rd day of March 1937 it was ordered that the matter of the petition of the applicant be heard on the 7th day of May 1937, and that the said applicant do attend to be examined by this Court on that date.

T. C. MUKHERJEE, Sub-Judge.

Alipore, the 1st April 1937.

(778—1)

In the 4th Court of the Sub-Judge of 24-Parganas.

INSOLVENCY CASE No. 116 OF 1937.

Ori Bari of Alifnagore, police-station Muchikhola, 24-Parganas, applicant.

To Nando Singh of 2, Basra Line, Kidderpore, and others, creditors.

ON the 23rd day of March 1937 it was ordered that the matter of the petition of the applicant be heard on the 7th day of May 1937, and that the said applicant do attend to be examined by this Court on that date.

T. C. MUKHERJEE, Sub-Judge.

Alipore, the 30th March 1937.

(779—1)

In the 4th Court of the Sub-Judge of 24-Parganas.

INSOLVENCY CASE No. 117 OF 1937.

Hira Lal Dera of 73/4, Mayerpore Road, Alipore, 24-Parganas, applicant.

To Birendra Nath Shee of 41, Chetla Road, Alipore, and others, creditors.

ON the 25th day of March 1937 it was ordered that the matter of the petition of the applicant be heard on the 7th day of May 1937, and that the said applicant do attend to be examined by this Court on that date.

T. C. MUKHERJEE, Sub-Judge.

Alipore, the 1st April 1937.

(780—1)

In the 4th Court of the Sub-Judge of 24-Parganas.

INSOLVENCY CASE No. 118 OF 1937.

Bholaram Lodhey of Benjanheria, police-station Budge Budge, 24-Parganas, applicant.

To Chote Lal Marwari of 48, Circular Garden Reach Road, Kidderpore, and another, creditors.

ON the 25th day of March 1937 it was ordered that the matter of the petition of the applicant be heard on the 7th day of May 1937, and that the said applicant do attend to be examined by this Court on that date.

T. C. MUKHERJEE, Sub-Judge.

Alipore, the 1st April 1937.

(781—1)

In the 4th Court of the Sub-Judge of 24-Parganas.

INSOLVENCY CASE No. 120 OF 1937.

Lakshman Chandra Mondal of Sonamukhi, police-station Moheshtala, 24-Parganas, applicant.

To Natabar Naskar of Jagannathpur, police-station Moheshtola, 24-Parganas, and others, creditors.

ON the 30th day of March 1937 it was ordered that the matter of the petition of the applicant be heard on the 14th day of May 1937, and that the said applicant do attend to be examined by this Court on that date.

T. C. MUKHERJEE, Sub-Judge.

Alipore, the 1st April 1937.

(782—1)

In the 4th Court of the Sub-Judge of 24-Parganas.

INSOLVENCY CASE No. 121 OF 1937.

(1) Rahim Bux Molla, (2) Eradali Molla, (3) Keramat Molla and (4) Mokchedali Molla of Tengrakhali, Canning, 24-Parganas, applicants.

To Basirhat Co-operative Bank, Basirhat, 24-Parganas, and others, creditors.

ON the 30th day of March 1937 it was ordered that the matter of the petition of the applicants be heard on the 14th day of May 1937, and that the said applicants do attend to be examined by this Court on that date.

T. C. MUKHERJEE, Sub-Judge.

Alipore, the 1st April 1937.

(783—1)

In the 4th Court of the Sub-Judge of 24-Parganas.

INSOLVENCY CASE No. 124 OF 1937.

Abodh Chandra Maghi of 63/2A, Ananda Palit Road, Entally, 24-Parganas, applicant.

To Surendra Nath Das of 7, Hazrabagan Lane, Calcutta, and others, creditors.

ON the 30th day of March 1937 it was ordered that the matter of the petition of the applicant be heard on the 14th day of May 1937, and that the said applicant do attend to be examined by this Court on that date.

T. C. MUKHERJEE, Sub-Judge.

Alipore, the 1st April 1937.

(784—1)

In the 4th Court of the Sub-Judge of 24-Parganas.

INSOLVENCY CASE No. 125 OF 1937.

Ramdin Nunia of Deulpara, Naihati, 24-Parganas, applicant.

To Badar Khan Kabuli of Kankinara, 24-Parganas, and others, creditors.

ON the 30th day of March 1937 it was ordered that the matter of the petition of the applicant be heard on the 14th day of May 1937, and that the said applicant do attend to be examined by this Court on that date.

T. C. MUKHERJEE, Sub-Judge.

Alipore, the 1st April 1937.

(785—1)

NOTICE TO CREDITORS OF APPLICATION FOR DISCHARGE.

Section 41(1) of the Provincial Insolvency Act, V of 1920.

In the 4th Court of the Sub-Judge at Alipore.

INSOLVENCY CASE No. 48 OF 1936.

Rohindra Mohan Rakshit of 41, Harish Neogy Road, 24-Parganas, applicant.

TAKE notice that the abovenamed insolvent has applied at the Court for his discharge, and that the Court has fixed the 14th day of May 1937 at 11 o'clock for hearing the application.

Dated this 1st day of April 1937.

T. C. MUKHERJEE, Sub-Judge.

(791—1)

NOTICE TO CREDITORS OF APPLICATION FOR DISCHARGE.

Section 41(1) of the Provincial Insolvency Act, V of 1920.

In the 4th Court of the Sub-Judge at Alipore.

INSOLVENCY CASE No. 55 OF 1936.

Gopal Chandra Guha Roy of Kowgachi, Jagaddal, 24-Parganas, applicant.

TAKE notice that the abovenamed insolvent has applied at the Court for his discharge, and that the Court has fixed the 14th day of May 1937 at 11 o'clock for hearing the application.

Dated this 3rd day of April 1937.

T. C. MUKHERJEE, Sub-Judge.

(792—1)

NOTICE TO CREDITORS OF APPLICATION FOR DISCHARGE.

Section 41(1) of the Provincial Insolvency Act, V of 1920.

In the 4th Court of the Sub-Judge at Alipore.

INSOLVENCY CASE No. 148 OF 1936.

Soleman Ali of Beliaghata, 24-Parganas, applicant.

TAKE notice that the abovenamed insolvent has applied at the Court for his discharge, and that the Court has fixed the 7th day of May 1937 at 11 o'clock for hearing the application.

Dated this 30th day of March 1937.

T. C. MUKHERJEE, Sub-Judge.
(793—1)

NOTICE TO CREDITORS OF APPLICATION FOR DISCHARGE.

Section 41(1) of the Provincial Insolvency Act, V of 1920.

In the 4th Court of the Sub-Judge at Alipore.

INSOLVENCY CASE No. 155 OF 1936.

Bhuban Chandra Biswas of Srikhanda, Sonarpore, 24-Parganas, applicant.

TAKE notice that the abovenamed insolvent has applied at the Court for his discharge, and that the Court has fixed the 7th day of May 1937 at 11 o'clock for hearing the application.

Dated this 30th day of March 1937.

T. C. MUKHERJEE, Sub-Judge.
(794—1)

NOTICE TO CREDITORS OF APPLICATION FOR DISCHARGE.

Section 41(1) of the Provincial Insolvency Act, V of 1920.

In the 4th Court of the Sub-Judge at Alipore.

INSOLVENCY CASE No. 162 OF 1936.

V. C. S. Dowman of 1, Loco Quarters, Narkeldanga, 24-Parganas, applicant.

TAKE notice that the abovenamed insolvent has applied at the Court for his discharge, and that the Court has fixed the 14th day of May 1937 at 11 o'clock for hearing the application.

Dated this 1st day of April 1937.

T. C. MUKHERJEE, Sub-Judge.
(795—1)

NOTICE TO CREDITORS OF APPLICATION FOR DISCHARGE.

Section 41(1) of the Provincial Insolvency Act, V of 1920.

In the 4th Court of the Sub-Judge at Alipore.

INSOLVENCY CASE No. 180 OF 1936.

Dhirendranath Ghosh of 1B, Ram Ratan Bose Lane, Manicktola, applicant.

TAKE notice that the abovenamed insolvent has applied at the Court for his discharge, and that the Court has fixed the 7th day of May 1937 at 11 o'clock for hearing the application.

Dated this 1st day of April 1937.

T. C. MUKHERJEE, Sub-Judge.
(796—1)

NOTICE TO CREDITORS OF APPLICATION FOR DISCHARGE.

Section 41(1) of the Provincial Insolvency Act, V of 1920.

In the 4th Court of the Sub-Judge at Alipore.

INSOLVENCY CASE No. 284 OF 1936.

Jogesh Chandra Burman of Kharda, police-station Diamond Harbour, 24-Parganas, applicant.

TAKE notice that the abovenamed insolvent has applied at the Court for his discharge, and that the Court has fixed the 7th day of May 1937 at 11 o'clock for hearing the application.

Dated this 30th day of March 1937.

T. C. MUKHERJEE, Sub-Judge.
(797—1)

NOTICE TO CREDITORS OF APPLICATION FOR DISCHARGE.

Section 41(1) of the Provincial Insolvency Act, V of 1920.

In the 4th Court of the Sub-Judge at Alipore.

INSOLVENCY CASE No. 298 OF 1936.

Mrs. B. Hazlam of 30, Convent Road, police-station Entally, 24-Parganas, applicant.

TAKE notice that the abovenamed insolvent has applied at the Court for her discharge, and that the Court has fixed the 14th day of May 1937 at 11 o'clock for hearing the application.

Dated this 1st day of April 1937.

T. C. MUKHERJEE, Sub-Judge.
(798—1)

NOTICE TO CREDITORS OF APPLICATION FOR DISCHARGE.

Section 41(1) of the Provincial Insolvency Act, V of 1920.

In the 4th Court of the Sub-Judge at Alipore.

INSOLVENCY CASE No. 315 OF 1936.

Natan Das M. Dhanrajani of 31, Russa Road, Tollygunge, Calcutta, applicant.

TAKE notice that the abovenamed insolvent has applied at the Court for his discharge, and that the Court has fixed the 30th day of April 1937 at 11 o'clock for hearing the application.

Dated this 10th day of March 1937.

T. C. MUKHERJEE, Sub-Judge.
(799—1)

NOTICE TO CREDITORS OF APPLICATION FOR DISCHARGE.

Section 41(1) of the Provincial Insolvency Act, V of 1920.

In the 4th Court of the Sub-Judge at Alipore.

INSOLVENCY CASE No. 327 OF 1936.

Abdul Wahab of 144, Garden Reach Road, police-station Watgunge, 24-Parganas, applicant.

TAKE notice that the abovenamed insolvent has applied at the Court for his discharge, and that the Court has fixed the 7th day of May 1937 at 11 o'clock for hearing the application.

Dated this 30th day of March 1937.

T. C. MUKHERJEE, Sub-Judge.
(800—1)

ORDER ANNULLING ADJUDICATION.

Section 43 of the Provincial Insolvency Act, V of 1920.

In the 4th Court of the Sub-Judge at Alipore.

INSOLVENCY APPLICATION No. 528 OF 1935.

Shaik Mohammad Amil, applicant.

WHEREAS Shaik Mohammad Amil, of Titagarh, Barhaniasthan, Titagarh, 24-Parganas, debtor, does not proceed with his application for discharge, it is ordered that the order of adjudication, dated 30th March 1936, against the debtor, be and the same is hereby annulled.

Dated this 22nd day of March 1937.

T. C. MUKHERJEE, Sub-Judge.

ORDER ANNULLING ADJUDICATION.

Section 43 of the Provincial Insolvency Act, V of 1920.

In the 4th Court of the Sub-Judge at Alipore.

INSOLVENCY APPLICATION No. 101 OF 1936.

R. T. Beadsworth, applicant.

WHEREAS R. T. Beadsworth of 25, Ekbalpore Road, Kidderpore, 24-Parganas, debtor, does neither appear nor apply for discharge within the specified time, it is ordered that the order of adjudication, dated 22nd June 1936, against the debtor, be and the same is hereby annulled.

Dated this 23rd day of March 1937.

T. C. MUKHERJEE, Sub-Judge.

ORDER ANNULLING ADJUDICATION.

Section 43 of the Provincial Insolvency Act, V of 1920.

In the 4th Court of the Sub-Judge at Alipore.

INSOLVENCY APPLICATION No. 256 OF 1936.

Shaik Ramjan, applicant.

WHEREAS Shaik Ramjan of 19, Alipore Road, 24-Parganas, debtor, does neither appear nor apply for discharge within the specified time, it is ordered that the order of adjudication, dated 21st September 1936, against the debtor, be and the same is hereby annulled.

Dated this 22nd day of March 1937.

T. C. MUKHERJEE, Sub-Judge.

MR. SIBAKALI BAGCHI, M.A., B.L., intends to be enrolled as an Advocate of the High Court.

(831—4)

MR. MADAN CHANDRA GHOSE intends to be enrolled as an Advocate of the Calcutta High Court.

(665—1)

RASH BEHARI MAZUMDAR intends to enrol himself as an Advocate of the High Court, Calcutta.

(686—4)

DHONESH CHANDRA MITRA, Pleader, desires to be enrolled as an Advocate of the High Court, Calcutta.

(743—4)

Office of the Collector of Faridpur.

APPLICATIONS are invited for the post of Government Pleader, Faridpur.

(a) The post carries a monthly retainer of Rs. 75 and fees according to the rules in the Legal Remembrancer's Manual.

(b) Appointment shall be for a period of three years and may be renewed for further periods if the incumbent is found fit and efficient.

(c) Candidates of other than Faridpur district will submit testimonials which must include recommendations from the Sessions Judge or District Magistrate of the district in which they are practising.

(d) Canvassing, in any form, will disqualify a candidate.

(e) Applications to be submitted to the Magistrate-Collector, Faridpur, on or before the 7th May 1937.

B. M. GHOSH, for Collector.

Faridpur, the 15th April 1937.

The Bengal and Madras Service Family Pension Fund which is provisionally managed and assisted by Government has for its object the provision of monthly pensions for the maintenance of the widows and children of subscribers and is open, with certain exceptions, to all active and pensioned members of the Uncovenanted service of Government (except those serving under the Government of Bombay), and to Local Fund servants earning pensions from Government. Some of the special features of the fund are (1) that widowed daughters incapable of re-marriage or children labouring under such mental or bodily infirmities as incapacitate them from earning their livelihood or preclude the possibility of marriage (in case of a daughter) are admitted to its benefits; and (2) that subscribers to the Widows' and Daughters' branches are entitled to a refund of 30 per cent. of the premia paid, should the nominee predecease them after five years of admission. The second quinquennial valuation of the Fund has been completed by the Actuary to the Government of India, and his report discloses very favourable results. For forms of application and rules of the Fund apply to the Accountant-General, Bengal, Imperial Secretariat Buildings, Calcutta.

Irrigation Department, Bengal.

In accordance with the rule 26 of the Navigation Rules of the Midnapore Canal issued under section 11 of the Canals Act, 1864 (Bengal Act V of 1864), and published under Irrigation Department notification No. 5 of the 19th June 1917, notice is hereby given for general information that the eighth reach of the Midnapore Canal from Bansberia to Uluberia will remain closed to traffic for a further period of eighteen days from 20th April 1937 to 7th May 1937, both days inclusive, owing to emergent repairs to the Bansberia and Uluberia locks and silt clearance of the said reach of the Canal in extension of the period already notified at page 1132 of Part II of the *Calcutta Gazette* of 10th December 1936.

S. C. MAJUMDAR,
Superintending Engineer,
South-Western Circle.

Calcutta, the 12th April 1937.

Notes.

PORTIONS of the following notes of the Calcutta Office of Issue are stated to have been destroyed, and payment of their value has been claimed by the person whose name is placed against the numbers. Any other person claiming a right to them is warned to communicate at once with the undersigned:—

Register No.	Number of Notes.	Value.	Name of claimant.
		Rs.	
W D 6-37	T/17, 222327	100	Abdul Jalil Biswas, son of Elahi Bux Biswas, village Jorpukhuria, post office Bamandi, district Nadia.
	T/17, 685829	100	
	T/17, 646167	100	
	T/17, 685830	100	
	T/17, 646166	100	
	T/17, 756364	100	
	T/17, 685832	100	
	T/17, 756365	100	
	T/17, 685831	100	
	T/17, 711659	100	
	T/17, 711660	100	
	T/17, 757796	100	
	T/17, 646165	100	
	T/17, 756366	100	
	T/17, 189287	100	

S. GUPTA, Currency Officer.

Reserve Bank of India, Issue Department, Calcutta, the 1st April 1937.

Custom House Notice.

TO be sold by public auction at the Custom House, 1, Charnock Place, Calcutta, at 1 p.m., on Wednesday, the 28th April 1937, under section 119, Sea Customs Act:—

1 case whisky (Inverary).
5 cases gin.
3 cases whisky (Portmore).
39 cases Jamie Stuart whisky.
20 cases rum.

The goods will be on view at the Custom House Baggage Shed, from 10 a.m., on the day of the sale.

They will be offered for sale in convenient lots.

G. N. BOWER, Collector of Customs.

Custom House, Calcutta, the 19th April 1937. (832—1)

Lost Receipt.

A RECEIPT numbered 6361, dated 7th April 1937, and granted by the Reserve Bank of India, Public Debt Office, on submission of the undermentioned Government Promissory Notes. Notice of loss has been given to the Reserve Bank of India, Public Debt Office, and the undersigned is about to apply for surrender of the securities:—

G. P. Note No.	Loan.	Amount. Rs.	Holder's name.
054976	5 per cent, 1945-55.	1,000	Sm. Indubala Debi.
039545	Ditto.	1,000	

Name of the proprietress—Sm. Indubala Debi.

Residence—25, Doctor Lane, Entally post office, Calcutta.

(829—1)

Lost Receipt.

A RECEIPT numbered 4, dated 8th February 1937, and granted by the Imperial Bank of India, Local Authorities Loan Section, on submission of the undermentioned New Howrah Bridge debenture. Notice of loss has been given to the Imperial Bank of India, Local Authorities Loan Section, and the undersigned is about to apply for the surrender of the security:

Debenture No.	Loan.	Amount. Rs.	Holder's name.
3191	3½ per cent., 1936.	5,000	Prabodh Chandra Chaudhuri.

Name of the proprietor—Prabodh Chandra Chaudhuri.

Residence—4, Bankshall Street, Calcutta.

(823—1)

Lost.

THE Government Promissory Note No. 376540 of the 3½ per cent. loan of 1900-01 for Rs. 1,000, originally standing in the name of Ashutosh Mullick, the proprietor, by whom it was never endorsed to any other person, having been lost, notice is hereby given that payment of the above note and the interest thereupon have been stopped at the Public Debt Office, Reserve Bank of India, Calcutta, and that application is about to be made for the issue of duplicate in favour of the proprietor. The public are cautioned against purchasing or otherwise dealing with the abovementioned security.

Signature of the advertiser—Ashutosh Mullick.

Residence—Babugange, Hooghly.

(787—3)

Lost.

THE Government Promissory Note No. 117459 of the 3½ per cent. loan of 1900-01 for Rs. 500, originally standing in the name of Prosad Das Boral and Brothers, and last endorsed to Charuprasad Chatterjee (since deceased), the proprietor, by whom it was never endorsed to any other person, having been lost, notice is hereby given that payment of the above note and the interest thereupon have been stopped at the Public Debt Office, Reserve Bank of India, Calcutta, and that application is about to be made for the issue of duplicate in favour of Sm. Saralabala Debi. The public are cautioned against purchasing or otherwise dealing with the abovementioned security.

Signature of the advertiser—Saralabala Debi.

Residence—57/1, Puddapukur Road, Calcutta.

(789—3)

In the matter of the Indian Companies Act, 1913,

and

In the matter of the Commerce and Culture of India, Ltd. (in voluntary liquidation).

NOTICE is hereby given that a meeting of the shareholders of the abovenamed Company will be held at Satsang on the 30th May 1937 at 4 p.m. in terms of section 217 of the Indian Companies Act, 1913.

The subject is an account of the winding up.

JOGENDRANATH SIRCAR,
Liquidator.

Post office Satsang, Pabna.

The 10th April 1937.

(814—1)

In the matter of the Indian Companies Act, 1913,

and

In the matter of the Holy Association, Ltd. (In voluntary liquidation).

NOTICE is hereby given that a meeting of the shareholders of the abovenamed Company will be held at Satsang on the 30th May 1937 at 5 p.m. in terms of section 217 of the Indian Companies Act, 1913.

The subject is an account of the winding up.

JOGENDRANATH SIRCAR,
Liquidator.

Post office Satsang, Pabna,
The 10th April 1937.

(815—1)

In the matter of the Indian Companies Act, 1913, as amended, and

In the matter of Western Coal Co., Ltd. (In voluntary liquidation).

MEMBERS' VOLUNTARY WINDING UP.

NOTICE is hereby given that at an extraordinary general meeting of the members of the abovenamed Company duly convened and held at No. 8, Clive Row, Calcutta, on Wednesday, the 14th April 1937, the following resolution was passed as a special resolution :—

"That it is desirable to wind up the Company and accordingly that the Company be wound up voluntarily and that Messrs. Allan Smith and George Alexander Strachan Sim, both of 8, Clive Row, Calcutta, be and they are hereby appointed liquidators for the purpose of such winding up, with joint and several powers and at remuneration to be agreed between them and the shareholders."

ALLAN SMITH,
G. A. S. SIM, } Liquidators.

8, Clive Row, Calcutta, the 14th April 1937. (824—1)

In the matter of the Indian Companies Act, 1913,

and

In the matter of Howrah Oil Mills Company, Limited (In voluntary liquidation).

NOTICE is hereby given that the final meeting of shareholders of the above Company will be held at No. 8, Clive Row, Calcutta, on Friday, the 21st day of May 1937, at 12 noon, for the purpose of receiving from the liquidators the accounts of the winding up showing how the winding up has been conducted and the property of the Company disposed of and for the purpose of passing a resolution in regard to the disposal of the books of the Company.

C. A. CARMICHAEL,
ALLAN SMITH,
Liquidators.

8, Clive Row, Calcutta, the 15th April 1937. (825—1)

In the matter of the Indian Companies Act, 1913,

and

In the matter of Anglo-Oriental (India), Limited (In voluntary liquidation).

NOTICE is hereby given that the final meeting of the shareholders of the Company will be held at the registered office of the Company, 8, Clive Street, Calcutta, on Tuesday, the 25th May 1937, at 11 o'clock forenoon, for the purpose of receiving the final account of the liquidation.

W. S. C. TULLY, Liquidator.

Calcutta, the 14th April 1937.

(817—1)

In the matter of the Indian Companies Act,

and

In the matter of the Ashugonj Sobhania Commercial Bank, Ltd., Ashugonj.

IT is hereby notified that the Ashugonj Sobhania Commercial Bank, Ltd., Ashugonj, by resolution No. 2 passed in the special general meeting held on 8th April 1937 at the registered office of the Company has resolved to wind up the affairs of the Company voluntarily and appointed Babu Brajendra Chandra Dutta, clerk of the Company, as the liquidator, for winding up the affairs and distributing the assets of the Company.

ABDUL SOBHAN MIAH, Secretary.

Ashugonj, Tippera, the 12th April 1937.

(816—1)

In the matter of the Indian Companies Act, and

In the matter of voluntary winding up of the Nilphamari Krishi Company, Limited.

AN extraordinary general meeting of both the members and creditors of the above Company was duly convened and held at the office of the Company on the 4th April 1937 and was adjourned to 9th April 1937 and the following resolution passed:—

"That it has been proved to the entire satisfaction of the meeting that the Company cannot by reason of its liability continue its business and that it is advisable for the Company to be wound up voluntarily and in the same meeting Babu Satish Chandra Bhattacharyya, Babu Harendra Chandra Lahiri and Babu Jatindra Bhushan Bagchi were appointed liquidators for the purposes of such winding up and they will get 2 per cent. on gross realisation of the Company."

SHITANATH GANGULY, Chairman.

Nilphamari, the 9th April 1937.

(818—1)

Imperial Library.

Secretariat Buildings, 6, Esplanade East, Calcutta. Open on—

Week days and Saturdays from 10 a.m. to 7 p.m.
Sundays and Gazetted holidays from 2 p.m. to 5 p.m.

THE Imperial Library is also a Lending Library. It is free to all except children. There is no subscription to pay.

K. M. ASADULLAH, Librarian.

Selected Publications from general stock in Publication Branch.

Political Department.

Memoirs of Gaur and Pandua, 1931. Rs. 5 (11a.).

Sannyasi and Fakir Raiders in Bengal, 1930. Re. 1-8 (7a.).

Judicial Department.

Rules and Forms under the Bengal Money Lenders Act, 1933. A. 1 (1a.).

Rules under the Indian Bar Councils Act, 1926. As. 5 (2a.).

Chronological Tables, 1936. A. 1 (1a.).

Manual of Practical Instructions for the conduct of Civil cases. As. 10 (4a.).

High Court's Civil Rules and Orders, Vol. I. Re. 1-10 (12a.).

High Court's Civil Rules and Orders, Vol. II. Re. 1-4 (10a.).

Report on the Administration of Civil Justice in Bengal, 1935. As. 14 (3a.).

Report on the Administration of Criminal Justice in Bengal, 1935. As. 3 (2a.).

Report on the Administration of Civil Justice in Assam, 1935. As. 7 (2a.).

Report on the Administration of Criminal Justice in Assam, 1935. As. 5 (2a.).

Political (Jails) Department.

Administration Report of Jails in Bengal, 1925, Rs. 4 (5a.), **1926,** Rs. 4 (4a.), **1928,** Rs. 13-2 (8a.), **1929,** Rs. 2-12 (3a.), **1930,** Rs. 3-5 (3a.), **1931,** Rs. 2-8 (3a.), **1933,** As. 12 (3a.), **1934,** As. 12 (3a.), **1935,** As. 12 (3a.).

Bengal Jail Code, Vol. I. Rs. 3-8 (11a.).

Bengal Jail Code, Vol. II. Rs. 4-8 (12a.).

Appointment Department.

Half-yearly Civil List for Bengal, corrected up to 1st July 1936. Rs. 3 (13a.).

Recruitment Rules for Provincial Services, 1930. As. 6 (2a.).

Report on the working of the Reforms Constitution in Bengal, 1921-27. Rs. 3 (8a.).

Question papers of the Bengal Provincial Services Examination of various years, 1936. Re. 1 (3a.).

Form of Return of Election Expenses, 1936. As. 4 (1a.).

Bengal Electoral Conduct of Election Rules, 1936. As. 4 (4a.).

Bengal Electoral Orders and Rules, 1936. As. 4 (4a.).

Council of State Electoral Rules and Regulations, corrected up to 30th March 1930. As. 15 (2a).

Police Department.

Bengal Chaukidary Manual, 1923. Re. 1-4 (6a.).

Motorists Handbook, 1934. As. 4 (2a.).

Bengal Presidency Motor Vehicles Rules, 1935. As. 8 (3a.).

Calcutta and Howrah Motor Vehicles Rules corrected up to 1st January 1933. As. 4 (2a.).

Safety first hints issued by the Calcutta Police, 1931. (In English, Hindi and Bengali). A. 1 (1a.) each.

Police Traffic Signal, 1926. As. 6 (1a.).

Rules for the Regulations of Traffic in Calcutta and suburbs, 1931. As. 10 (2a.).

Bengal Arms Act Manual, 1924, as modified up to June 1933. As. 14 (7a.).

The Poisons Act and Rules, 1934. As. 4 (2a.).

Commerce Department.

Bengal Factories Rules, 1935. As. 8 (2a.).

Bengal Boilers Rules, 1928. As. 4 (1a.).

Rules under section 30 of the Indian Mines Act, 1923. As. 3 (1a.).

Rules under section 33 of the Workmen's Compensation Act, 1923. A. 1 (1a.).

Bengal Trade Union Regulations, 1927. As. 2 (1a.).

Bengal Trade Dispute Rules, 1930. As. 3 (1a.).

Bengal Partnership Rules, 1933. A. 1 (1a.).

Rules framed under section 9 of the Indian Petroleum Act, 1899, to regulate the importation, possession and transport of Petroleum in the Presidency of Bengal, 1933. As. 4 (2½a.).

Rules framed by the Government of Bengal under the Indian Petroleum Act for Carbide of Calcium, 1922. As. 8 (2a.).

Rules under section 24 of the Provident Insurance Societies Act, 1912. Published 1933. As. 2 (2a.).

Bengal Electricity Duty Rules, 1935. A. 1 (1a.).

Rules for the Levy of Fees for the Services of Electric Inspectors, 1935. A. 1 (1a.).

Regulations under Rule 40A of the Indian Electricity Rules, 1922. Published 1936. As. 4 (1a.).

Marine Department.

Manual of Regulations relating to the Examination of First and Second Class Masters and Serangs of Inland Steam Vessels, 1931. Rs. 2 (3a.).

Regulations relating to the Examination of Engineers and Engine-drivers of Inland Steam and Motor Vessels, 1931. Re. 1 (2a.).

Bengal Legislative Council Department.

Proceedings of the Bengal Legislative Council.

For the meetings held on the 14th to 16th, 19th, 20th, 22nd, 23rd and 26th to 28th August 1935, Vol. XLVI, No. 2. Re. 1-11 (10a.).

Revenue Department.

Census of India, Bengal, Vol. V, Part I, 1921. Rs. 8 (Re. 1-3a.).

Census of India, Bengal, Vol. V, Part II, 1921. Rs. 13 (Re. 1-3a.).

Census of Calcutta, Vol. VI, Part I, 1921. Rs. 5 (10a.).

Census of Calcutta, Vol. VI, Part II, 1921. Rs. 7-8 (11a.).

Report on the Administration of Bengal, 1929-30. Rs. 4-12 (7a.).

Report on the Administration of Bengal, 1930-31. Rs. 5-14 (10a.).

Report on the Administration of Bengal, 1933-34. Re. 1-8 (7a.).

Report on the Administration of Bengal, 1934-35. Re. 1-8 (7a.).

Bengal District Gazetteers—

"A" Volumes.—

"Bakarganj." Rs. 3 (9a.).
"Birbhum." Rs. 2-8 (9a.).
"Dacca." Rs. 3 (9a.).
"Dinajpur." Rs. 3 (9a.).
"Faridpur." Rs. 5-8 (9a.).
"Hooghly." Rs. 3 (9a.).
"Howrah." Rs. 3 (9a.).
"Noakhali." Rs. 3 (9a.).
"Rajshahi." Rs. 3 (9a.).
"Jalpaiguri." Rs. 3 (9a.).
"Jessore." Rs. 3 (9a.).
"Khulna." Rs. 3 (9a.).
"Malda." Rs. 3 (9a.).
"Murshidabad." Rs. 3 (9a.).
"Nadia." Rs. 3 (9a.).
"Pabna." Rs. 4 (9a.).
"24-Parganas." Rs. 3 (9a.).

"B" Volumes—27 districts. Re. 1 (3a.) each district.

Annual Progress Report on Forest Administration in Bengal :—

1923-24. Rs. 4 (3a.).
1924-25. Rs. 2-10 (3a.).
1926-27. Rs. 4 (3a.).
1927-28. Rs. 8-1 (6a.).
1928-29. Rs. 10 (7a.).
1930-31. Rs. 4-8 (3a.).
1931-32. Re. 1-13 (3a.).
1932-33. Re. 1-9 (4a.).
1933-34. Rs. 2-2 (4a.).
1934-35. Re. 1 (4a.).

Annual Report of Government Cinchona Plantations and Factories in Bengal :—

1916-17. As. 5 (1a.).
1917-18. As. 5 (1a.).
1918-19. As. 6 (2a.).
1919-20. As. 6 (2a.).
1921-22. As. 8 (2a.).
1922-23. As. 8 (2a.).
1923-24. As. 7 (2a.).
1925-26. As. 14 (1a.).
1926-27. As. 13 (2a.).
1927-28. As. 13 (1a.).
1928-29. Re. 1-4 (2a.).
1929-30. As. 9 (1a.).
1931-32. As. 12 (2a.).
1932-33. As. 4 (2a.).

Rules under the Tenancy Act, 1932. As. 6 (3a.).

Terms and conditions on which application under section 158A of the Bengal Tenancy Act may be allowed by Government, 1935. A. 1 (1a.).

Executive Instructions regarding transmission of landlords' fee under the Bengal Tenancy Act, 1931. As. 4 (1a.).

Notes on the amendments of the Bengal Tenancy Act, 1885, made by the amending Acts IV of 1920 and II of 1930, by Rai M. N. Gupta Bahadur, M.A., B.L. As. 10 (3a.).

A Revenue History of the Sundarbans from 1765 to 1870, by F. E. Pargiter, B.A. Re. 1-12 (8a.).

Local Self-Government Department.

Local Self-Government Account Rules for District Boards in Bengal, corrected up to June 1932. Rs. 3-7 (3a.).

Rules for the appointment of District Engineers, etc., Part IX rules, corrected up to December 1932. As. 4 (1a.).

Rules (Election) under the Local Self-Government Act, corrected up to June 1936. A. 1 (1a.).

Motor Vehicles Tax Rules, 1933. As. 2 (1a.).

Provisions of the Calcutta Municipal Act as extended to the Municipality of Howrah, 1932. Re. 1-7 (6a.).

Union Board Manual, Vol. I. 1928. As. 8 (4a.).

Union Board Manual, Vol. I. 1928 (in Bengali). As. 8 (4a.).

List of Union Boards in Bengal, 2nd Edition. Printed in 1934. As. 7 (3a.).

Local Self-Government (Medical).

Rules for the grant of certificate to compounders, 1928. A. 1 (1a.).

Rules for the management of the Government Medical Schools in Bengal, 1935. A. 1 (2a.).

Manual of Rules for the management of Hospitals and Dispensaries under the supervision of the Government of Bengal, corrected up to March 1926. As. 8 (2a.).

List of Hospitals, Dispensaries and other Medical institutions in Bengal, corrected up to 31st December 1935. Rs. 2-2 (4a.).

The Annual Report on Hospitals and Dispensaries in Bengal, 1935. Rs. 2 (6a.).

The Triennial Report on Hospitals and Dispensaries in Bengal, 1932-34. Rs. 2 (6a.).

The Annual Report on the Medical Schools in Bengal, 1934-35. Re. 1 (4a.).

The Annual Report on the Chemical Examiner's Department, Bengal, 1935. As. 8 (1a.).

The Annual Report on the Medical College, Calcutta, 1934-35. As. 8 (1a.).

The Pharmacopoea of the Medical College Hospitals, Calcutta, 1935. As. 12 (3a.).

The Pharmacopoea of the Presidency General Hospital, Calcutta, 1934. Re. 1 (3a.).

Local Self-Government (Public Health).

Annual Public Health Report, 1934. Re. 1 (6a.).

Annual Report of the Chief Engineer, Public Health Department, Bengal, 1935. As. 8 (1a.).

Education Department.

List of High Schools and Colleges in Bengal, corrected up to 31st December 1935. As. 2 (2a.).

Report on Public Instruction in Bengal, 1934-35. As. 6 (3a.).

Irrigation Department.

Classified list and distribution return of establishment, corrected up to 1st July 1936. Re. 1-3 (2a.).

Revenue and Administration Report for the year 1933-34. Rs. 3-3 (6a.).

Agriculture Department.

Publications of general interest.

Annual Report of the Department of Agriculture in Bengal, 1935-36. Part I, As. 11 (2a.); Part II, Re. 1-4 (6a).

Agricultural Statistics of Bengal, 1934-35. As. 6 (2a).

Season and Crop Report of Bengal, 1935-36. As. 4 (2a).

Quinquennial Report on the Cattle Census of Bengal, 1930. Rs. 3-10. (3a).

Quinquennial Report on the Crop Cutting Experiments, 1927-28 and 1931-32. As. 12.

Publication of special interest.

Report on the Bengal Jute Enquiry Committee, 1934. Rs. 3 (10a).

Industries Department, Bengal.

Publications of general interest.

Annual Report of the Department of Industries, Bengal, for the year 1935-36. Re. 1-8 (4a).

Report on the Survey of Cottage Industries in Bengal (2nd edition). Re. 1-12 (3a).

Publications of special interest.

Installation of Weaving Factories in Bengal (Bulletin No. 19). As. 7 (2a).

Hand-book of Tanning, by B. M. Das, M.Sc. (Leeds) (Bulletin No. 63). Rs. 2-8 (7a).

Manufacture of Bar and Moulded Soap as a Cottage Industry, by Dr. R. L. Datta, D.Sc., and Tinkari Basu, B.Sc. (Bulletin No. 31). A. 1 (1a).

The Manufacture of Soft Soap, by Dr. R. L. Datta, D.Sc., and P. K. Ghose, B.Sc. A. 1 (1a).

Manufacture of Shellac, by Dr. R. L. Datta, D.Sc., and Tinkari Basu, B.Sc. (Bulletin No. 38). As. 14 (2a).

Report on the Investigation on the possibilities of the Match Industry in Bengal, by A. P. Ghose, M.Sc., C.I. (Lond.) (Bulletin No. 16). As. 12 (2a).

Possibilities of manufacture of furniture and other articles of sheet steel as a small scale cottage or bazar industry, by A. T. Weston, M.Sc., M.I.C.E., M.I.E. (Bulletin No. 57). As. 12 (2a).

Conch Shell Industry in Bengal, by S. C. Mitter, B.Sc. (Eng.) (Bulletin No. 24). As. 12 (1a.).

Rice Mill Industry in Bengal, by S. C. Mitter, B.Sc. (Eng.) (Bulletin No. 33). As. 8 (1a.).

Ice-making, by S. C. Mitter, B.Sc. (Eng.) (Bulletin No. 36). As. 10 (1a.).

Excise Department.

Publication of general interest.

Excise Administration Report for 1934-35. Re. 1-2 (3a.).

Co-operative Department.

Publication of general interest.

Annual Report on the working of Co-operative Societies in the Presidency of Bengal for the year ending 30th June 1935. As. 10 (4a.).

Superintendent, Royal Botanic Garden.

Publication of general interest.

Annual Report of the Royal Botanic Garden, Government Garden, Calcutta and Lloyd Botanic Garden, Darjeeling, for 1935-36. A. 1 (1a.).

Publications of special interest.

Annals of the Royal Botanic Garden, Calcutta.

Trees of Northern Bengal, by Dr. J. M. Cowan and A. M. Cowan, B.A. Re. 1-12 (4a.).

Veterinary Department.

Publication of general interest.

Annual Report of the Civil Veterinary Department and the Bengal Veterinary College for 1934-35. As. 4 (2a.).

Bengal Secretariat Record Room.

Bengal Historical Records (already published), Edited by the Ven. W. K. Firminger, D.D., Litt.B., Late Archdeacon of Calcutta. Re. 1 (4a.).

Proceedings of the Controlling Council of Revenue at Murshidabad, Vol. V, 1st April to 15th July 1771. Price Rs. 11-8 (15a.).

Letter Copy Book of the Supervisor of Rajshahi at Nator (Letter issued), 30th December 1769 to 15th September 1772. Price Rs. 5-8 (3a.).

Proceedings of the Committee of Circuit at Krishnagar and Kasimbazar, Vols. I, II and III, 10th June to 17th September 1772. Price Rs. 19 (13a.).

Proceedings of the Committee of Circuit at Dacca, Vol. IV, 3rd October to 28th November 1772. Price Rs. 15-8 (11a.).

Proceedings of the Committee of Circuit at Rangpur, Dinajpur, Purnea and Rajmahal, Vols. V, VI, VII and VIII, 16th December 1772 to 18th February 1773. Price Rs. 17-8 (12a.).

Bengal District Records, Edited by the Ven. W. K. Firminger, D.D., B.Litt., Late Archdeacon of Calcutta—

Midnapore, Vol. I, 1763-7. Price Rs. 3 (10a.).

Midnapore, Vol. II, 1768-70. Price Rs. 3 (10a.).

Rangpur, Vol. I, 1770-9. Price Rs. 3 (9a.).

Dinajpur, Vol. I, 1787-9. Price Rs. 3 (Re. 1.).

Rangpur, Vol. I, 1770, 1777-79. Price As. 12 (1a.) (supplement).

Rangpur, Vol. V, 1786-87. Price Rs. 32-8 (13a.) (receipts).

Rangpur, Vol. VI, 1786-87. Price Rs. 43 (Re. 1-1a.) (issues).

Midnapore, Vol. IV, 1770-74. Price Rs. 20-9 (11a.) (issues).

PRESS LISTS, SERIES I.

Supreme Revenue authorities.

Supplementary Volume.

Bengal Secretariat Record Room, 1771-1775. Price As. 9 (3a.).

SERIES II.

Intermediate Revenue authorities.

Volume III, Part I.

Proceedings of the Calcutta Committee of Revenue, 6th December 1773 to 28th December 1775. Price Rs. 2 (7a.)

SELECT INDEXES.

Select Index to the General Letters.

Volume I.

Select Index to General Letters to and from the Court of Directors in the Revenue, Territorial Revenue, Territorial Financial and Miscellaneous Revenue Departments of the Government of Bengal, 1771-1858. Price Rs. 17-4 (9a.).

Volume II.

Select Index to General Letters to and from the Court of Directors in the Separate Revenue, Commercial, Financial and Territorial Financial Departments of the Government of Bengal, 1765-1854. Price Rs. 7-8 (7a.).

Volume III.

Select Index to General Letters to the Court of Directors for 1793-1858 and from the Court of Directors for 1827-1829 in the Judicial Department of the Government of Bengal. Price Rs. 10 (8a.).

Volume IV.

Select Index to General Letters to and from the Court of Directors in the Public or General, Ecclesiastical, Public Works, Railway, Public Works, Revenue, Legislative and Financial Departments of the Government of Bengal, 1834-1856. Price Rs. 9 (8a.).

CINCHONA FACTORY PRODUCTS.

By order of the Government of Bengal Cinchona Factory Products as manufactured and packed at the Cinchona Factory, Mungpoo, Darjeeling district, will be sold and distributed by the Superintendent of the **Presidency Jail**, *in original packages* as received from the Mungpoo Factory, at the rates herein noted **from the 1st May 1926** :—

Name of drug.	Price per lb. in powder form. Taken at a time. For 60 lbs. and upwards.	For 6 lbs. and over but less than 60 lbs.	For any quantity less than 6 lbs.	Price in 5 grain tablets. 1,000 tablets.	500 tablets.	250 tablets.	Price by weight per lb.
	Rs.	Rs.	Rs.	Rs.	Rs. a.	Rs. a.	Rs.
Quinine Bisulphate ..	18	19	20	16	8 0	4 4	..
" Hydrobromide ..	23	24	25	20	10 0	5 4	..
" Bihydrobromide ..	26	27	28	23	11 8	6 0	..
" Salicylate ..	24	25	26	..	..	..	..
" Tannate ..30 per cent. 35 per cent.	14	15	16	..	..	..	14

N.B.—Packing free in tins, sizes 1 lb., 8 oz. and 4 oz. only Packing in bottles or smaller sizes of tins extra.

Quinine Sulphate.

For 60 lbs. and upwards at a time .. Rs. 18 per lb.
For 6 lbs. and over but less than 60 lbs. at a time .. .. .. " 19 "
For any quantity less than 6 lbs. .. " 20 "

Crude Quinine Sulphate Powder .. Rs. 14 per lb.
Crude Quinine Sulphate Tablets .. " 12-8 "
Will be sold to Government departments, local authorities, hospitals, dispensaries and missionaries in the Bengal area of distribution.

Totaquina.

Irrespective of quantity .. Rs. 13-8 per lb.
For sale to hospitals and dispensaries in Bengal, Bihar, Orissa and Assam.

Quinine Hydrochloride.

For 60 lbs. and upwards at a time .. Rs. 23 per lb.
For 6 lbs. and over but less than 60 lbs. at a time .. .. .. " 24 "
For any quantity less than 6 lbs. .. " 25 "

Quinine Di-Hydrochloride.

For 60 lbs. and upwards at a time .. Rs. 25 per lb.
For 6 lbs. and over but less than 60 lbs. at a time .. .. .. " 26 "
For any quantity less than 6 lbs. .. " 27 "

Quinidine Sulphate.

For 60 lbs. and upwards at a time .. Rs. 20 per lb.
For 6 lbs. and over but less than 60 lbs. at a time .. .. .. " 21 "
For any quantity less than 6 lbs. .. " 22 "

Cinchonidine Sulphate.

For 60 lbs. and upwards at a time .. Rs. 25 per lb.
For 6 lbs. and over but less than 60 lbs. at a time .. .. .. " 26 "
For any quantity less than 6 lbs. .. " 27 "

Cinchonine Sulphate.

For 60 lbs. and upwards at a time .. Rs. 12 per lb.
For 6 lbs. and over but less than 60 lbs. at a time .. .. .. " 13 "
For any quantity less than 6 lbs. .. " 14 "

*Cinchona Febrifuge (Powder).

For 60 lbs. and upwards at a time .. Rs. 9 per lb.
For 6 lbs. and over but less than 60 lbs. at a time .. .. .. " 9 "
For any quantity less than 6 lbs. .. " 10 "

*Cinchona Febrifuge (Tablets).

For 60 lbs. and upwards at a time .. Rs. 10 per lb.
For 6 lbs. and over but less than 60 lbs. at a time .. .. .. " 10 "
For any quantity less than 6 lbs. .. " 11 "

Supply of Cinchona Febrifuge to all authorised indentors will be rationed in the proportion of 1½ of Cinchona Febrifuge to 1 of Quinine Sulphate at their existing prescribed prices.

Cinchona Bark (in 50 pound original bags).

Per bag .. .. .. Rs. 25.

4 grains Quinine Tablets.

Rs.	a.	
2	8	per box of 200 tablets (for Bengal and other provinces).
15	8	per lb.

5 grains Quinine Tablets.

Rs.	a.	
15	8	per lb. sold in 1 lb., ½ lb. and ¼ lb. tins.

5 grains Quinine Hydrochloride Tablets.

Rs.	a.	
20	0	per 1,000 tablets.
10	0	" 500 "
5	4	" 250 "

Packing free in tins, sizes 1 lb., 8 oz. and 4 oz. only. Packing in bottles or smaller sizes in tins extra.

5 grains Quinine Bihydrochloride Tablets.

Rs.	a.	
22	0	per 1,000 tablets.
11	0	" 500 "
6	0	" 250 "

Packing free in tins, sizes 1 lb., 8 oz. and 4 oz. only. Packing in bottles or smaller sizes in tins extra.

Transit charges extra in every case.

Quinine and Cinchona products will be sold by the Presidency Jail to (*a*) Local Governments and departments of Local Governments, (*b*) dispensaries and hospitals belonging to or managed by Local Governments and local authorities, (*c*) Municipalities, District Boards, Railways, Union Boards and other local authorities otherwise than for purposes of sale to the public, (*d*) Missions, (*e*) Government Medical Store Depot, Calcutta.

Provinces other than Bengal, Bihar, Orissa and Assam will get their supplies of Sulph. Quinine and Cinchona Febrifuge Powder and Tablets from the Director, Botanical Survey of India, Sibpur, Howrah.

Local sale at the jail gate from 10 a.m. to 3-30 p.m.

The system of payment is by—*Cash in advance*—by "*Treasury Challans*," "*Remittance Transfer Receipts*" or crossed "*Cheques*."

Indents unaccompanied by cash in advance will be sent Value Payable Post. Credit sale is not allowed except under special circumstances.

In the case of *Government officers* payments will be recovered by *Book Transfer, i.e., Countersigned Invoices*, in the event of *Cash* not accompanying the indent by "*Treasury Challans*," *Remittance Transfer Receipt or Cheque*.

2. Price and postage must accompany the price of the drug (when the drug is required by post).

The name of the Railway and Steamer Station or Post Office must be written distinctly when the parcels are required by Rail, Steamer or by Post. Railway parcels are sent by passenger train only.

A scale of postage is given below.

	1 oz.	2 ozs.	4 ozs.	½ lb.	¾ lb.	1 lb.
	As.	As.	As.	As.	As.	Rs. A.
Quinine Sulph. ..	..	..	7	7	11	0 11
Cinchona Feb. ..	..	..	7	7	11	0 11
Cinchona Feb. Tablets	..	..	7	7	11	0 11
Quinine Hydrochlor. ..	5	5	7	7	..	0 11
Quinine Di-hydrochlor.	5	5	7	7	..	0 11
Quinine Tablets ..	..	..	7	7	11	0 11
Totaquina ..	..	..	7	7	11	0 11

	1½ lb.	2 lb.	3 lb.	4 lb.	5 lb.	6 lb.
	Rs. A.	Rs. A.	Rs. A.	Rs. A.	Rs. A.	Rs. A.
Quinine Sulph. ..	0 15	1 3	1 7	1 15	2 7	2 11
Cinchona Feb. ..	0 15	0 15	1 7	1 11	2 3	2 7
Cinchona Feb. Tablets	0 15	1 3	1 11	1 15	2 7	2 15
Quinine Hydrochlor. ..	0 15	1 3	1 7	1 15	2 7	2 11
Quinine Di-hydrochlor.	0 15	0 15	1 7	1 11	2 3	2 7
Quinine Tablets ..	0 15	0 15	1 7	1 11	1 15	2 3
Totaquina ..	0 15	1 3	1 7	1 15	2 7	2 11

Two different drugs are not packed in the same parcel and postage must be paid separately for each kind.

N.B.—Postage stamps are not accepted as revenue.

Government reserve the right to alter the price without notice.

NOW ON SALE

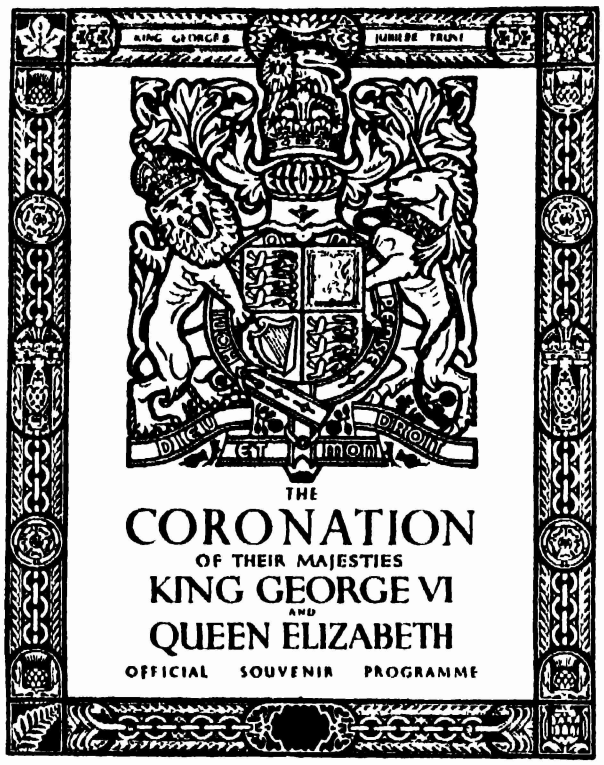

THE Official Coronation Programme specially produced for His Majesty's subjects overseas is now on sale at newsagents and booksellers. There are thirty-two pages of text and beautiful illustrations, and the cover is printed in full colours and gold making an attractive souvenir.

The contents include:—

Foreword by H.R.H. THE DUKE OF GLOUCESTER. Special photographs of THEIR MAJESTIES THE KING AND QUEEN, QUEEN MARY, PRINCESS ELIZABETH and PRINCESS MARGARET. "A PRAYER FOR THE KING'S REIGN," by the Poet Laureate. "THE KING'S MAJESTY," by John Drinkwater. Description of the Procession and Pictorial Map of the Route. The full text of the Coronation Service in Westminster Abbey, with an introduction by his Grace the Lord Archbishop of Canterbury. An illustrated explanation of the Ceremonial. Genealogical Table showing the descent of the Crown.

The programme is a complete guide to the broadcast ceremonies, and will be treasured as a lasting record of the Coronation of Their Majesties King George VI and Queen Elizabeth. Secure your copy to-day.

THE OFFICIAL SOUVENIR

CORONATION PROGRAMME

PRICE IN INDIA—Rs. 1/4/-

By Gracious Permission of His Majesty, the Programme is issued by King George's Jubilee Trust.

Registered No. C207

The Calcutta Gazette

THURSDAY, APRIL 22, 1937.

PART V

Acts of the Indian Legislature assented to by the Governor-General and Ordinances promulgated under section 72 of the Government of India Act.

GOVERNMENT OF INDIA.

Legislative Department.

The following Act of the Indian Legislature received the assent of the Governor General on the 4th March, 1937, and is hereby promulgated for general information :—

ACT No. VIII OF 1937.

An Act further to amend the Code of Civil Procedure, 1908, for certain purposes.

WHEREAS it is expedient further to amend the Code of Civil Procedure, 1908, for the purposes hereinafter appearing ; V of 1908.
It is hereby enacted as follows :—

Short title and commencement.

1. (*1*) This Act may be called the Code of Civil Procedure (Amendment) Act, 1937.

(*2*) It shall come into force on such date as the Governor General in Council may, by notification in the Gazette of India, appoint.

Insertion of new section 44A in Act V of 1908.

2. After section 44 of the Code of Civil Procedure, 1908, V of 1908 the following section shall be inserted, namely :—

Execution of decrees passed by Courts in the United Kingdom and other reciprocating territory.

"44A. (*1*) Where a certified copy of a decree of any of the superior Courts of the United Kingdom or any reciprocating territory has been filed in a District Court, the decree may be executed in British India as if it had been passed by the District Court.

(2) Together with the certified copy of the decree shall be filed a certificate from such superior Court stating the extent, if any, to which the decree has been satisfied or adjusted and such certificate shall, for the purposes of proceedings under this section, be conclusive proof of the extent of such satisfaction or adjustment.

(3) The provisions of section 47 shall as from the filing of the certified copy of the decree apply to the proceedings of a District Court executing a decree under this section, and the District Court shall refuse execution of any such decree, if it is shown to the satisfaction of the Court that the decree falls within any of the exceptions specified in clauses (*a*) to (*f*) of section 13.

Explanation 1.—'Superior Courts,' with reference to the United Kingdom, means the High Court in England, the Court of Session in Scotland, the High Court in Northern Ireland, the Court of Chancery of the County Palatine of Lancaster and the Court of Chancery of the County Palatine of Durham.

Explanation 2.—'Reciprocating territory' means any country, or territory, situated in any part of His Majesty's Dominions or in India, which the Governor General in Council may, from time to time, by notification in the Gazette of India, declare to be reciprocating territory for the purposes of this section; and 'superior Courts,' with reference to any such territory, means such Courts as may be specified in the said notification.

Explanation 3.—'Decree,' with reference to a superior Court, means any decree or judgment of such Court under which a sum of money is payable, not being a sum payable in respect of taxes or other charges of a like nature or in respect of a fine or other penalty, and

(*a*) with reference to superior Courts in the United Kingdom, includes judgments given and decrees made in any Court in appeals against such decrees or judgments,

but

(*b*) in no case includes an arbitration award, even if such award is enforceable as a decree or judgment."

Amendment of rule 22 of Order XXI of the First Schedule of Act V of 1908.

3. In rule 22 of Order XXI of the First Schedule of the Code of Civil Procedure, 1908, in 1(*b*) after the words "party to the decree" the following shall be inserted, namely :— V of 1908.

"or where an application is made for execution of a decree filed under the provisions of section 44A."

G. H. SPENCE,

Secy. to the Govt. of India.

GOVERNMENT OF INDIA.

Legislative Department.

The following Act of the Indian Legislature received the assent of the Governor General on the 4th March, 1937, and is hereby promulgated for general information :—

ACT No. IX OF 1937.

An Act further to amend the Code of Civil Procedure, 1908, for certain purposes.

WHEREAS it is expedient further to amend the Code of Civil Procedure, 1908, for the purposes hereinafter appearing ; It is hereby enacted as follows :— V of 1908.

Short title.

1. This Act may be called the Code of Civil Procedure (Second Amendment) Act, 1937.

Amendment of section 60, Act V of 1908.

2. In the proviso to sub-section (*1*) of section 60 of the Code of Civil Procedure, 1908,— V of 1908.

(*a*) for clauses (*h*) and (*i*) the following clauses shall be substituted, namely :—

" (*h*) the wages of labourers and domestic servants, whether payable in money or in kind ; and salary to the extent of the first hundred rupees and one-half the remainder of such salary ;

(*i*) the salary of any public officer or of any servant of a railway company or local authority to the extent of the first hundred rupees and one-half the remainder of such salary :

Provided that, where the whole or any part of the portion of such salary liable to attachment has been under attachment, whether continuously or intermittently for a total period of twenty-four months, such portion shall be exempt from attachment until the expiry of a further period of twelve months and, where such attachment has been made in execution of one and the same decree, shall be finally exempt from attachment in execution of that decree ;" ;

(*b*) in clause (*k*), for the figures " 1897 " the figures " 1925 " shall be substituted ;

(*c*) for clause (*l*) the following clause shall be substituted, namely :—

" (*l*) any allowance forming part of the emoluments of any public officer or of any servant of a railway company or local authority which the Governor General in Council may by notification in the Gazette of India declare to be exempt from attachment, and any subsistence grant or allowance made to any such officer or servant while under suspension ;";

(*d*) the *Explanation* at the end shall be re-numbered as *Explanation 1* and, to the *Explanation* as so re-numbered the following words shall be added, namely :—

" and in the case of salary other than salary of a public officer or a servant of a railway company or local authority the attachable portion thereof is exempt from attachment until it is actually payable "; and

(*e*) after the *Explanation* as so re-numbered the following *Explanation* shall be added, namely :—

" *Explanation 2.*—In clauses (*h*) and (*i*), ' salary ' means the total monthly emoluments, excluding any allowance declared exempt from attachment under the provisions of clause (*l*) derived by a person from his employment whether on duty or on leave."

Retrospective effect.

3. The amendments made by section 2 shall not have effect in respect of any proceedings arising out of any suit instituted before the first day of June, nineteen hundred and thirty-seven.

G. H. SPENCE,
Secy. to the Govt. of India.

GOVERNMENT OF INDIA.

Legislative Department.

The following Act of the Indian Legislature received the assent of the Governor General on the 10th March, 1937, and is hereby promulgated for general information :—

ACT No. XII OF 1937.

An Act to amend the Contempt of Courts Act, 1926, for a certain purpose.

WHEREAS it is expedient to amend the Contempt of Courts Act, 1926, for the purpose hereinafter appearing; It is hereby enacted as follows :— XII of 1926.

Short title.

1. This Act may be called the Contempt of Courts (Amendment) Act, 1937.

Amendment of preamble to Act XII of 1926.

2. In the preamble to the Contempt of Courts Act, 1926 (hereinafter referred to as the said Act), the word "subordinate" shall be omitted. XII of 1926.

Amendment of section 3, Act XII of 1926.

3. To section 3 of the said Act the following proviso shall be added, namely :—

"Provided further that notwithstanding anything elsewhere contained in any law no High Court shall impose a sentence in excess of that specified in this section for any contempt either in respect of itself or of a Court subordinate to it."

G. H. SPENCE,

Secy to the Govt. of India.

Registered No. C207

The Calcutta Gazette

THURSDAY, APRIL 22, 1937.

PART VI

Bills introduced in the Council of State and Legislative Assembly, Reports of Select Committees presented to the Council and Assembly, and Bills published under Rule 18 of the Indian Legislative Rules.

GOVERNMENT OF INDIA.

Legislative Assembly Department.

The following Bill was introduced in the Legislative Assembly on the 4th March, 1937 :—

L. A. BILL No. 15 OF 1937.

A Bill further to amend the Code of Civil Procedure, 1908, for a certain purpose.

WHEREAS it is expedient further to amend the Code of Civil Procedure, 1908, for the purpose hereinafter appearing ; It is hereby enacted as follows :— V of 1908.

Short title.

1. This Act may be called the Code of Civil Procedure (Third Amendment) Act, 1937.

Amendment of rule 3, Order XXXII, First Schedule to Act V of 1908.

2. In the First Schedule to the Code of Civil Procedure, 1908, in Order XXXII, to rule 3 the following sub-rule shall be added, namely :— V of 1908.

"(5) A person appointed under sub-rule (*1*) to be guardian for the suit for a minor shall, unless his appointment is terminated by retirement, removal or death, continue as such throughout all proceedings arising out of the suit including proceedings in any appellate or revisional Court and any proceedings in the execution of a decree."

STATEMENT OF OBJECTS AND REASONS.

Rule 3 of Order XXXII of the First Schedule to the Code of Civil Procedure, 1908, lays down that where the defendant is a minor, the Court shall appoint a proper person to be guardian for the suit for such minor. It has been held by the High Courts that an appointment made during the course of original suit endures during proceedings on appeal. There is no provision in the Code requiring fresh appointment of guardians for the execution proceedings following suits. It might therefore be thought that a guardian *ad litem* appointed during a suit continues as such till the termination of the execution proceedings. But some High Courts follow a different interpretation and one of them has held that the guardian *ad litem* appointed by a Court for a minor defendant does not continue to be the guardian for the suit in the execution proceedings without a fresh appointment. The Bill proposes to make it clear that the appointment endures throughout all proceedings arising out of the suit, including those in any appellate or revisional Court and those in the execution of a decree.

NEW DELHI,
The 24th February, 1937

H. CRAIK.

MD. RAFI,
Secy to the Govt. of India.

GOVERNMENT OF INDIA.

Legislative Assembly Department.

The following Bill was introduced in the Legislative Assembly on the 12th March, 1937 :—

L. A. BILL No. 17 OF 1937.

A Bill to reconstitute the Committee constituted under the Indian Soft Coke Cess Act, 1929.

WHEREAS it is expedient to reconstitute the Committee constituted under the Indian Soft Coke Cess Act, 1929 ; It is hereby enacted as follows :— VIII of 1929.

Short title, commencement and duration.

1. (*1*) This Act may be called the Indian Soft Coke Cess (Reconstitution of Committee) Act, 1937.

(*2*) It shall come into force on such date as the Governor General in Council may, by notification in the Gazette of India, appoint in this behalf, and shall remain in force as long only as sections 2 to 7 of the Indian Soft Coke Cess Act, 1929, remain in force. VIII of 1929.

Reconstitution of the Indian Soft Coke Cess Committee.

2. On the commencement of this Act, the Committee constituted under sub-section (*1*) of section 4 of the Indian Soft Coke Cess Act, 1929, shall stand dissolved, and shall be reconstituted in the manner provided in section 4 of the said Act as amended by section 4 of this Act. VIII of 1929.

Vesting of moneys in the reconstituted Committee.

3. All the moneys held by the dissolved Committee shall vest in the Committee as reconstituted under section 2.

Amendment of Act VIII of 1929.

4. In the Indian Soft Coke Cess Act, 1929,— VIII of 1929.

(*a*) in the long title and in the preamble, the word "and" where it occurs for the first time, shall be omitted ;

(*b*) in sub-section (*1*) of section 3, the word "and", where it occurs for the second time, shall be omitted ; and

(*c*) in sub-section (*1*) of section 4,—

(*i*) in clause (*iii*), the words "and Orissa" shall be omitted ;

(*ii*) in clause (*iv*), for the word "seven" the word "three" shall be substituted, and the word "and" shall be omitted ;

(*iii*) for clause (*v*) the following clause shall be substituted, namely :—

"(*v*) two persons nominated by the Indian Mining Association ; and " ; and

(*iv*) after clause (*v*) the following clause shall be inserted, namely :—

"(*vi*) three persons nominated by the Indian Colliery Owners' Association."

STATEMENT OF OBJECTS AND REASONS.

The present representation of non-official bodies on the Soft Coke Cess Committee, constituted under section 4 (*1*) of the Indian Soft Coke Cess Act, 1929, consists of seven persons nominated by the Indian Mining Federation and one person nominated by the Indian Mining Association. This allocation of seats was originally adopted because practically all the proprietors of collieries which produce soft coke were then members of the Indian Mining Federation. The position has, however, since been altered owing to the interest which other bodies engaged in this industry have acquired in the manufacture of soft coke, and the Indian Colliery Owners' Association have for this reason been pressing for some time for separate representation on the Committee on the basis of the output of soft coke by their members. An examination on this basis of the relative importance of the various interested bodies shows that the claim of this Association is justified and that a readjustment of the representation of non-official bodies on the Committee is necessary in the manner proposed in the Bill.

It is further proposed to amend the Act so as to provide that the nomination hitherto made by the Government of Bihar and Orissa will in future be made by the Government of Bihar in whose territory the coalfields are mainly situated. The Bill is also intended to give effect to this proposal, and to certain formal changes in the long title and preamble and in section 3 (*1*) of the Act rendered necessary by the constitution of Orissa as a separate Province.

NEW DELHI,
The 8th March, 1937.

ZAFRULLAH KHAN.

MD. RAFI,
Secy. to the Govt. of India.

Registered No. C207

No. 16 of 1937

The Calcutta Gazette

THURSDAY, APRIL 22, 1937.

CONTENTS:

	Page.
Statement under the Cotton Ginning and Pressing Factories Act, 1925 ..	445
Return of Vital Statistics for the month of December 1936	446—451
Statement of weekly gauge readings on the river Buriganga	452
Weather and Crop Report for the week ending the 14th April 1937 ..	453—456
Vital Statistics of towns of Bengal for the weeks ending 3rd and 10th April 1937 ..	457 & 460
Statement showing water-levels of certain rivers in Bengal for the month of February 1937	458—459
Corporation of Calcutta Notices ..	461
Third Forecast of the Wheat Crop of Bengal, 1936-37	461—462
Resolution on the Report on the Administration of the Excise Department in the Presidency of Bengal for the year 1935-36	463—464

SUPPLEMENT.

Official Papers.

FORM C—BENGAL.

STATEMENT OF COTTON PRESSED IN THE BENGAL PRESIDENCY FOR THE WEEK ENDING THE 9th APRIL 1937.

[Section 5 (2) of the Cotton Ginning and Pressing Factories Act, 1925.]

Name of Division or block.	Number of bales pressed.				District included in the block.
	During the week.	During the corresponding week last year.	Since 1st September 1936 (the date prescribed by the Local Government as the commencement of the season).	During the corresponding period last year.	
The Bengal Presidency	2,364 or 2,343·71 bales of 400 lbs. each.	2,234	26,205	31,232	All districts in the Presidency.

C. S. STEEL,

Chief Inspector of Factories, Bengal (offg.).

Vital Statistics for the month of December 1936 of the

Districts.	No.	Towns.	Population under registration according to census of 1931.			Births registered.		Deaths							
			Male.	Female.	Total.	Number registered (excluding stillbirths).	Stillborn number registered.	Cholera.	Small-pox.	Plague.	Malaria.	Enteric fever.	Measles.	Relapsing fever (Spirochaetal).	Kala-azar.
Burdwan ..	1	Burdwan	23,485	16,133	39,618	51	..	..	..	..	7	..	..	..	1
	2	Raniganj	9,162	7,211	16,373	59	4	..	..	..	10	..	..	..	..
	3	Asansol ..	18,710	12,576	31,286	105	2	..	..	..	..	2	..	..	..
Birbhum ..	4	Suri ..	6,089	4,819	10,908	11	2	1	..	..	..	..	..	..	..
Bankura ..	5	Bankura ..	17,280	14,423	31,703	29	..	..	9	..	..	1	..	..	..
	6	Vishnupur	9,767	9,929	19,696	37	..	..	1	..	..	..	..	..	..
	7	Sonamukhi	5,337	5,652	10,989	24	1	..	..	..	1	..	..	..	..
Midnapur ..	8	Midnapur	17,807	14,214	32,021	80	..	..	..	..	7	..	..	..	..
	9	Ghatal ..	6,422	5,978	12,400	25	1	..	..	..	1	..	..	..	..
Hooghly ..	10	Hooghly-Chinsura.	18,799	13,835	32,634	100	6	11	..	..	..	2	1	..	..
	11	Bansberia	9,797	4,424	14,221	10	..	..	..	..	4	..	..	..	..
	12	Serampur	23,985	15,071	39,056	85	2	..	..	..	..	4	..	..	..
	13	Rishra-Konnagar.	17,528	9,340	26,868	27	..	..	..	..	..	2	..	..	..
	14	Baidyabati	10,369	8,117	18,486	45	1	..	..	..	1	1	1	..	..
	15	Bhadreswar	14,938	8,054	22,992	38	..	1	..	..	..	..	..	..	..
	16	Champdani	17,497	7,868	25,365	51	..	1	..	..	1	..	..	..	..
Howrah ..	17	Howrah ..	145,120	79,753	224,873	564	25	15	2	..	6	21	..	..	1
	18	Bally ..	20,944	9,403	30,347	36	..	..	..	..	2	..	..	..	..
24-Parganas ..	19	South Suburban.	22,183	17,316	39,499	86	4	..	..	..	3	..	1	..	..
	20	Garden Reach.	36,131	19,741	55,872	97	7	1	..	..	10	..	..	..	..
	21	Tollyganj	14,800	9,676	24,476	38	..	..	..	..	..	..	..	..	..
	22	Budge-Budge.	15,514	8,669	24,183	29	2	..	..	..	1	1	..	..	..
	23	Baranagar	23,116	13,934	37,050	74	4	1	..	..	..	3	..	..	..
	24	Kamarhati	20,107	10,247	30,354	40	..	..	..	..	..	..	..	..	1
	25	Rajpur ..	5,788	5,645	11,433	33	..	..	..	..	1	1	..	..	1
	26	South Dum Dum.	11,983	6,488	18,471	34	..	1	..	..	..	..	..	..	1
	27	Barrackpur	16,320	9,075	25,395	14	..	..	..	..	..	..	..	..	..
	28	Panihati	6,738	4,961	11,699	23	..	..	..	..	..	..	..	..	..
	29	North Barrackpur.	9,751	6,507	16,258	48	2	..	..	..	5	..	..	..	..
	30	Titagarh	34,252	15,332	49,584	84	5	..	..	..	..	..	..	..	..
	31	Garulia ..	9,282	4,751	14,033	26	..	..	..	..	1	..	..	..	..
	32	Naihati ..	20,123	10,785	30,908	34	..	1	..	..	1	..	1	..	..
	33	Halisahar	12,188	4,582	16,770	13	..	1	..	..	3	..	..	..	1
	34	Kanchrapara.	10,113	4,892	15,005	15	1	..	..	..	..	..	..	..	..
	35	Bhatpara	60,134	24,841	84,975	100	6	..	..	..	5	2	..	..	..
	36	Basirhat ..	11,106	10,181	21,287	36	..	..	..	..	9	..	..	..	1
	37	Baduria ..	7,169	6,508	13,677	25	..	..	..	..	9	..	..	..	..
Calcutta ..	38	Calcutta ..	778,817	362,045	1,140,862	2,798	210	23	5	..	75	64	6	..	11
Nadia ..	39	Krishnagar	12,807	11,477	24,284	105	3	..	..	..	..	2	..	..	..
	40	Nabadwip	8,912	9,949	18,861	30	4	1	1	..	..	2	..	..	..
	41	Ranaghat	6,334	5,061	11,395	13	..	..	..	..	4	..	..	..	..
	42	Santipur	12,016	12,976	24,992	64	3	..	8	..	..	..	1	..	..

towns with a population of 10,000 and over in Bengal.

registered.

Influenza.	Other fevers.	Dysentery.	Diarrhœa.	Pneumonia.	Pulmonary tuberculosis.	Other respiratory diseases.	Injuries including suicide.	Deaths from child-birth.	Other causes.	Total of all causes.			Total of corresponding month of previous year.			No.	Towns.
										Male.	Female.	Total.	Male.	Female.	Total.		
..	..	2	1	6	3	3	2	1	13	22	17	39	20	16	36	1	Burdwan.
..	3	4	2	3	1	5	..	1	13	22	20	42	9	16	25	2	Raniganj.
..	6	..	..	8	..	6	4	2	15	21	22	43	13	12	25	3	Asansol.
..	1	..	..	1	..	..	..	1	..	..	4	4	4	4	8	4	Suri.
..	4	..	1	3	..	..	3	..	11	21	11	32	12	8	20	5	Bankura.
..	..	..	3	3	..	..	..	..	13	7	13	20	11	6	17	6	Vishnupur.
..	4	2	..	..	2	..	..	..	6	10	5	15	12	7	19	7	Sonamukhi.
..	7	7	4	12	..	..	..	..	17	24	30	54	113	107	220	8	Midnapur.
..	4	..	..	2	..	..	1	..	6	6	8	14	21	18	39	9	Ghatal.
..	3	2	3	9	..	4	..	..	25	35	25	60	48	37	85	10	Hooghly-Chinsura.
..	..	..	..	2	..	1	..	1	2	4	6	10	5	3	8	11	Bansberia.
..	17	10	11	6	2	5	..	..	20	39	36	75	33	39	72	12	Serampur.
..	10	3	9	2	..	2	..	..	4	20	12	32	27	24	51	13	Rishra-Konnagar.
..	2	..	2	1	..	1	1	2	17	10	19	29	20	17	37	14	Baidyabati.
..	1	1	2	2	2	2	..	1	5	7	10	17	14	8	22	15	Bhadreswar.
..	1	2	2	4	..	..	..	..	16	11	16	27	10	10	20	16	Champdani.
..	1	90	43	73	23	94	14	5	230	328	290	618	319	250	569	17	Howrah.
..	2	1	4	2	..	..	..	1	7	6	13	19	13	5	18	18	Bally.
..	7	8	4	3	4	3	1	1	17	31	21	52	31	22	53	19	South Suburban.
1	9	4	5	2	3	1	..	..	14	27	23	50	21	24	45	20	Garden Reach.
..	..	1	2	1	5	..	..	..	12	11	10	21	12	3	15	21	Tollyganj.
..	8	7	..	5	3	4	3	..	15	30	17	47	20	18	38	22	Budge-Budge.
..	10	16	4	5	1	8	1	2	21	30	42	72	39	29	68	23	Baranagar.
1	10	4	1	..	3	2	1	1	6	15	15	30	19	13	32	24	Kamarhati.
..	8	2	1	2	..	2	..	1	6	10	15	25	10	7	17	25	Rajpur.
..	3	3	..	2	..	2	..	..	7	14	5	19	4	5	9	26	South Dum Dum.
..	2	..	..	2	..	..	1	..	1	3	3	6	5	6	11	27	Barrackpur.
..	..	1	..	..	1	..	..	..	10	9	3	12	10	12	22	28	Panihati.
..	2	4	1	1	2	3	..	..	7	13	12	25	11	11	22	29	North Barrackpur.
..	56	..	..	2	..	..	1	..	4	42	21	63	39	32	71	30	Titagarh.
..	..	..	..	..	..	1	..	..	2	1	3	4	5	11	16	31	Garulia.
..	9	..	..	3	..	4	..	..	16	24	11	35	18	12	30	32	Naihati.
..	2	..	..	..	1	1	1	..	6	8	8	16	5	4	9	33	Halisahar.
..	4	..	..	..	..	1	1	..	1	4	3	7	8	6	14	34	Kanchrapara.
..	40	3	6	9	3	13	..	1	44	70	56	126	57	42	99	35	Bhatpara.
..	6	6	..	..	1	..	1	1	8	13	20	33	22	24	46	36	Basirhat.
..	12	5	..	2	1	1	..	3	7	15	25	40	23	18	41	37	Baduria.
35	85	167	112	274	236	467	58	18	1,272	1,607	1,301	2,908	1,680	1,202	2,882	38	Calcutta.
..	2	..	..	1	..	..	..	..	27	16	16	32	17	15	32	39	Krishnagar.
..	25	7	2	1	2	2	2	2	13	26	34	60	23	23	46	40	Nabadwip.
..	1	1	..	..	1	..	..	..	2	4	5	9	4	3	7	41	Ranaghat.
..	13	2	..	5	2	1	1	2	13	24	24	48	19	12	31	42	Santipur.

Vital Statistics for the month of December 1936 of the

Districts.	No.	Towns.	Population under registration according to census of 1931.			Births registered.		Deaths							
			Male.	Female.	Total.	Number registered (excluding still-births).	Still-born number registered.	Cholera.	Small-pox.	Plague.	Malaria.	Enteric fever.	Measles.	Relapsing fever (Spirochaetal).	Kala-azar.
Murshidabad	43	Berhampur	15,166	12,237	27,403	40	4	1	..	..	2	..	..	..	2
	44	Jiaganj-Azimganj.	5,774	5,224	10,998	15	1	..	..	..	..	..	..	..	..
	45	Kandi ..	6,403	6,213	12,616	25	1	10	..	..	..	..	..	..	..
	46	Jangipur	6,283	6,513	12,796	24	..	..	..	..	..	..	..	..	1
Jessore ..	47	Jessore ..	7,084	4,272	11,356	13	..	..	..	..	2	..	..	..	..
Khulna ..	48	Khulna ..	11,968	7,152	19,120	16	..	2	..	..	1	1	..	..	..
	49	Satkhira ..	6,071	5,170	11,241	14	..	..	..	..	2	..	..	..	1
Rajshahi ..	50	Rajshahi	15,178	11,886	27,064	88	..	4	..	..	1	..	..	..	..
Dinajpur ..	51	Dinajpur	11,763	7,393	19,156	14	..	2	..	..	3	..	..	..	..
Jalpaiguri ..	52	Jalpaiguri	11,995	6,967	18,962	59	2	..	..	..	9	1	..	..	1
Darjeeling..	53	Darjeeling	12,101	9,084	21,185	72	5	..	..	..	..	..	..	..	2
Rangpur ..	54	Rangpur	12,808	7,941	20,749	25	1	..	..	..	2	..	..	..	..
Bogra ..	55	Bogra ..	8,678	6,141	14,819	31	..	..	..	..	..	2	..	..	..
Pabna ..	56	Pabna ..	11,970	9,934	21,904	13	..	..	..	..	3	..	..	..	..
	57	Sirajganj	17,981	14,486	32,467	63	1	..	..	..	2	..	..	..	..
Malda ..	58	English Bazar.	9,387	7,520	16,907	35	..	..	..	..	9	..	..	..	1
	59	Nawabganj	7,497	8,329	15,826	54	..	..	9	..	..	..	..	..	1
Dacca ..	60	Dacca ..	79,365	59,153	138,518	657	25	48	..	..	..	3	10	..	6
	61	Narayanganj	21,526	12,663	34,189	135	4	39	..	..	1	..	..	..	..
Mymensingh	62	Mymensingh	19,733	10,747	30,480	29	3	..	10	..	..	..	..	..	..
	63	Netrakona	6,848	4,132	10,980	23	..	..	..	..	..	..	..	..	..
	64	Jamalpur	12,629	10,448	23,077	62	1	..	..	..	..	..	..	..	..
	65	Sherpur ..	10,545	9,002	19,547	51	3	..	..	..	2	1	..	..	..
	66	Kishorganj	8,624	6,813	15,437	37	1	1	..	..	..	..	..	..	..
	67	Bajitpur ..	5,632	6,018	11,650	10	..	..	..	..	..	..	..	..	..
	68	Tangail ..	8,739	7,343	16,082	33	3	..	..	..	2	2	..	..	..
Faridpur ..	69	Faridpur	9,427	6,089	15,516	19	..	..	..	..	5	..	..	..	..
	70	Madaripur	15,204	11,690	26,894	60	2	..	..	..	..	..	..	..	..
Bakarganj ..	71	Barisal ..	23,588	12,128	35,716	56	5	9	..	..	..	..	..	..	..
	72	Pirojpur ..	6,062	4,897	10,959	31	..	1	..	..	..	..	..	..	..
Chittagong	73	Chittagong	35,049	18,107	53,156	117	8	6	22	..	1	2	..	..	2
Noakhali .	74	Noakhali	7,808	5,255	13,063	13	2	6	..	..	..	..	..	..	..
Tippera ..	75	Comilla ..	18,530	12,835	31,365	38	..	..	2	..	..	..	..	..	2
	76	Brahmanbaria.	13,973	12,689	26,662	112	3	2	8	..	..	..	..	..	..
	77	Chandpur	11,443	5,395	16,838	14	..	4	..	..	2	..	..	..	..
		Total of month.	2,051,552	1,194,305	3,245,857	7,412	371	203	77	..	216	120	21	..	37
		Total of corresponding month of previous year ..	..	..	..	7,752	370	129	450	..	195	111	11	..	42
		Increase + or decrease —	..	..	..	−340	+1	+74	−373	..	+21	+9	+10	..	−5

Remarks.—1. The above table is compiled from returns collected by the municipalities and submitted to the Director of Public Health by the approximate to the actual in a proportion of cases and in a few instances are obviously incomplete.

2. The vital statistics of municipalities with a population of less than 10,000 have been excluded from this statement and 1918.

3. The birth and death ratios per mille per annum have been omitted from this statement according to Government of India,

Calcutta, the 9th April 1937.

towns with a population of 10,000 and over in Bengal.

registered.

Influenza.	Other fevers.	Dysentery.	Diarrhœa.	Pneumonia.	Pulmonary tuberculosis.	Other respiratory diseases.	Injuries including suicide.	Deaths from child-birth.	Other causes.	Total of all causes.			Total of corresponding month of previous year.			No.	Towns.
										Male.	Female.	Total.	Male.	Female.	Total.		
..	11	4	..	4	1	..	..	..	22	31	16	47	24	30	54	43	Berhampur.
..	2	1	..	..	..	..	..	..	2	3	2	5	9	7	16	44	Jiaganj-Azimganj.
..	1	..	1	1	..	1	..	..	3	8	9	17	9	4	13	45	Kandi.
..	2	1	..	..	1	..	..	..	..	4	1	5	4	5	9	46	Jangipur.
..	..	..	..	1	..	1	1	..	8	7	6	13	8	3	11	47	Jessore.
..	18	4	..	..	..	..	..	3	8	19	18	37	12	4	16	48	Khulna.
..	10	..	1	..	..	..	1	3	2	7	13	20	22	12	34	49	Satkhira.
..	6	3	2	..	1	..	1	..	23	19	22	41	10	13	23	50	Rajshahi.
..	13	3	..	2	..	..	..	2	5	16	14	30	17	9	26	51	Dinajpur.
..	..	3	..	3	4	2	1	3	8	26	9	35	21	9	30	52	Jalpaiguri.
..	24	1	..	4	5	2	..	..	10	27	21	48	10	16	26	53	Darjeeling.
..	13	4	1	1	..	2	..	..	10	20	13	33	19	12	31	54	Rangpur.
..	2	1	..	1	..	1	..	..	5	7	5	12	4	8	12	55	Bogra.
..	..	..	..	..	..	2	1	..	3	8	1	9	3	7	10	56	Pabna.
..	21	1	1	3	..	..	6	3	13	29	21	50	38	35	73	57	Sirajganj.
..	2	1	..	4	..	2	1	..	7	18	9	27	7	1	8	58	English Bazar.
..	2	2	1	3	1	..	..	..	11	13	17	30	11	8	19	59	Nawabganj.
..	5	29	15	71	8	48	7	8	126	193	191	384	189	148	337	60	Dacca.
..	16	6	4	3	..	5	1	2	41	63	55	118	45	38	83	61	Narayanganj.
..	41	..	..	..	..	3	2	..	11	30	37	67	33	20	53	62	Mymensingh.
..	5	1	..	..	..	..	..	..	4	4	6	10	5	..	5	63	Netrakona.
..	6	..	2	1	..	..	..	..	8	10	7	17	9	13	22	64	Jamalpur.
..	9	2	2	6	2	3	..	1	13	16	25	41	19	27	46	65	Sherpur.
..	6	2	1	..	..	..	1	..	3	10	4	14	7	8	15	66	Kishorganj.
..	1	..	..	..	..	1	..	3	2	1	6	7	10	3	13	67	Bajitpur.
..	2	2	..	2	..	..	1	3	8	8	14	22	5	5	10	68	Tangail.
..	1	1	..	..	..	3	3	1	4	11	7	18	13	8	21	69	Faridpur.
..	10	5	..	1	1	..	..	3	34	28	26	54	25	17	42	70	Madaripur.
..	26	9	..	1	..	4	..	1	8	30	28	58	34	22	56	71	Barisal.
..	5	..	..	..	..	..	..	..	11	7	10	17	9	9	18	72	Pirojpur.
..	24	6	3	2	1	3	9	7	62	88	62	150	25	39	64	73	Chittagong.
..	4	2	1	..	..	..	..	1	5	13	16	29	4	10	14	74	Noakhali.
..	1	1	..	1	..	..	..	..	10	12	5	17	12	7	19	75	Comilla.
..	13	5	5	..	..	2	..	1	24	31	29	60	23	16	39	76	Brahmanbaria.
..	3	1	1	..	..	..	1	..	3	9	6	15	6	..	6	77	Chandpur.
37	685	466	266	574	327	724	134	92	2,468	3,468	2,979	6,447	..	..	..		
54	612	289	176	557	308	726	118	75	2,368	3,507	2,714	6,221	..	..	..		
−17	+73	+177	+90	+17	+19	−2	+16	+17	+100	−39	+265	+226	..	..	..		

District Health Officers. Taken as a whole, the statement possesses a relative value, although the figures for individual town probably only incorporated in the returns for districts as ordered in Government of Bengal, Municipal Department, letter No. 118 San., dated the 8th February Education Department, letter No. 93, dated the 26th March 1918.

A. C. CHATTERJI, M.B., D.P.H., LT.-COL., I.M.S., *Director of Public Health, Bengal.*

Vital Statistics for the month of December 1936 of the districts

Division.	No.	Districts.	Population under registration according to census of 1931.			Births registered.		Deaths							
			Male.	Female.	Total.	Number registered (excluding still-births).	Still-born number registered.	Cholera.	Small-pox.	Plague.	Malaria.	Enteric fever.	Measles.	Relapsing fever (Spirochaetal).	Kala-azar.
Burdwan	1	Burdwan	763,534	724,888	1,488,422	3,788	30	132	4	..	679	12	3	..	5
	2	Birbhum	466,598	470,048	936,646	3,023	94	48	14	..	533	23	6	..	..
	3	Bankura	524,690	524,643	1,049,333	2,967	27	..	103	..	332	3	8	..	2
	4	Midnapur	1,392,796	1,361,876	2,754,672	7,800	285	137	4	..	1,857	22	11	..	5
	5	Hooghly	479,217	455,416	934,633	2,933	26	38	93	..	520	50	6	..	4
	6	Howrah ..	433,011	410,636	843,647	2,766	45	41	60	..	132	11	2	..	..
Presidency	7	24-Parganas	1,154,286	1,074,531	2,228,817	5,793	101	47	87	..	576	24	2	..	41
	8	Nadia ..	720,894	678,608	1,399,502	5,237	164	463	56	..	1,026	7	4	..	15
	9	Murshidabad.	649,857	657,007	1,306,864	5,336	156	217	103	..	1,149	16	7	..	49
	10	Jessore	864,362	795,446	1,659,808	5,651	268	464	21	..	2,562	14	6	..	22
	11	Khulna ..	833,612	762,175	1,595,787	5,330	307	430	..	..	1,262	61	1	..	36
Rajshahi	12	Rajshahi	726,117	675,837	1,401,954	5,206	384	306	38	..	2,764	5	8	..	19
	13	Dinajpur	912,329	823,947	1,736,276	5,356	394	34	92	..	2,782	18	20	..	283
	14	Jalpaiguri	521,824	442,571	964,395	3,093	137	..	..	..	1,167	4	6	..	8
	15	Darjeeling	158,030	140,420	298,450	884	64	..	..	..	275	..	..	..	18
	16	Rangpur	1,343,786	1,230,250	2,574,036	9,768	1,107	..	7	..	4,127	16	43	..	324
	17	Bogra ..	548,496	523,104	1,071,600	2,915	..	21	7	..	1,386	17	5	..	69
	18	Pabna .	709,076	682,207	1,391,283	5,964	365	110	34	..	1,529	28	15	..	38
	19	Malda ..	510,421	510,612	1,021,033	3,386	41	218	17	..	1,318	6	2	..	42
Dacca ..	20	Dacca ..	1,642,626	1,617,244	3,259,870	13,488	721	1,967	213	..	2,025	40	56	..	138
	21	Mymensingh	2,594,444	2,408,565	5,003,009	20,387	1,342	525	76	..	4,820	35	32	..	175
	22	Faridpur	1,181,717	1,138,088	2,319,805	9,845	485	1,776	13	..	2,023	25	18	..	89
	23	Bakarganj	1,475,688	1,416,687	2,892,375	10,846	431	1,849	1	..	2,061	77	4	..	380
Chittagong	24	Chittagong	837,839	906,043	1,743,882	5,833	486	635	98	..	887	107	27	..	100
	25	Noakhali	851,010	842,646	1,693,656	7,959	565	1,769	79	..	513	26	15	..	205
	26	Tippera ..	1,551,694	1,483,176	3,034,870	14,881	972	1,077	75	..	856	31	49	..	305
	27	Chittagong Hill Tracts													Not
		Total of month for Bengal.	23,875,876	22,779,347	46,655,223	170,525	8,997	12,304	1,295	..	40,061	678	356	..	2,462
		Total of corresponding month of previous year.	..	..	..	174,073	9,014	5,914	731	..	42,222	737	330	10	2,017
		Increase + or decrease −.	..	..	..	−3,548	−17	+6,390	+564	..	−2,161	−59	26	−10	+445

Remarks.—1. The above table is compiled from returns collected by the Subdivisional Officers and submitted to the Director of
individual district probably only approximate to the actual.
2. The vital statistics of municipalities with a population of less than 10,000 have been included in this statement with
3. Divisional totals and the birth and death ratios per mille per annum have been omitted from this statement according to

Calcutta, the 9th April 1937.

excluding towns with a population of 10,000 and over in Bengal.

registered.

Influenza.	Other fevers.	Dysentery.	Diarrhœa.	Pneumonia.	Pulmonary tuberculosis.	Other respiratory diseases.	Injuries including suicide.	Deaths from child-birth.	Other causes.	Total of all causes. Male.	Total of all causes. Female.	Total of all causes. Total.	Total of corresponding month of previous year. Male.	Total of corresponding month of previous year. Female.	Total of corresponding month of previous year. Total.	No.	Districts
7	688	38	75	138	27	85	35	29	420	1,249	1,128	2,377	1,302	1,247	2,549	1	Burdwan.
1	761	26	12	36	25	103	26	25	249	959	929	1,888	927	920	1,847	2	Birbhum.
3	682	14	74	118	44	49	12	23	398	936	929	1,865	963	959	1,922	3	Bankura.
13	1,730	141	206	362	64	115	76	113	1,300	3,084	3,072	6,156	3,408	3,291	6,699	4	Midnapur.
4	271	18	147	204	36	71	23	37	363	945	940	1,885	1,224	1,179	2,403	5	Hooghly.
3	354	38	213	96	72	71	50	14	298	745	710	1,455	703	659	1,362	6	Howrah.
7	2,254	67	89	208	54	67	111	57	710	2,230	2,171	4,401	3,075	2,846	5,921	7	24-Parganas
4	553	16	59	123	21	47	46	58	516	1,986	1,928	3,914	2,480	2,392	4,872	8	Nadia.
2	434	14	28	32	14	17	31	29	440	1,335	1,247	2,582	1,405	1,233	2,638	9	Murshidabad.
..	670	26	61	101	37	63	41	76	445	2,245	2,364	4,609	3,168	3,039	6,207	10	Jessore.
..	915	45	47	58	49	64	53	73	1,117	2,188	2,023	4,211	2,322	2,255	4,577	11	Khulna.
4	543	23	30	90	10	33	56	99	564	2,209	2,383	4,592	2,243	2,337	4,580	12	Rajshahi.
8	1,562	81	60	358	92	90	72	181	329	2,965	3,100	6,065	2,257	2,200	4,457	13	Dinajpur.
15	797	61	80	401	57	63	13	99	214	1,509	1,476	2,985	1,308	1,255	2,563	14	Jalpaiguri.
7	212	19	4	42	23	9	4	2	141	393	363	756	364	384	748	15	Darjeeling.
1	2,804	55	49	205	44	105	34	247	396	4,127	4,330	8,457	3,721	3,810	7,531	16	Rangpur.
..	439	18	41	84	26	18	11	49	224	1,199	1,216	2,415	1,616	1,575	3,191	17	Bogra.
3	942	27	39	109	25	55	34	78	532	1,770	1,828	3,598	2,111	2,174	4,285	18	Pabna.
..	222	9	19	10	4	9	17	19	169	1,124	957	2,081	1,044	896	1,940	19	Malda.
1	3,294	551	245	125	83	215	49	190	2,085	5,465	5,812	11,277	4,217	4,149	8,366	20	Dacca.
9	5,221	160	134	138	148	133	65	312	2,473	7,106	7,350	14,456	6,228	6,113	12,341	21	Mymensingh.
6	2,141	298	118	272	23	177	42	132	1,287	4,107	4,333	8,440	3,613	3,771	7,384	22	Faridpur.
48	3,067	351	181	547	38	621	71	120	1,453	5,445	5,424	10,869	4,276	4,283	8,559	23	Bakarganj.
10	2,961	115	78	234	26	38	48	86	322	2,776	3,095	5,871	2,303	2,273	4,576	24	Chittagong.
7	2,358	202	94	148	15	150	51	126	858	3,152	3,464	6,616	2,360	2,590	4,950	25	Noakhali.
6	2,784	455	138	85	20	117	53	158	2,221	4,132	4,307	8,439	3,526	3,509	7,035	26	Tippera.
under registration.																27	Chittagong. Hill Tract
178	38,659	2,868	2,321	4,324	1,086	2,585	1,124	2,435	19,524	65,381	66,879	132,260	..	..	..		
249	35,488	2,349	2,119	4,667	1,250	2,236	1,138	2,234	19,812	62,164	61,339	123,503	..	..	..		
71	+3,171	+519	+202	−343	−164	+349	−14	+201	−288	+3,217	+5,540	+8,757	..	..	..		

Public Health by the District Health Officers. Taken as a whole, the statement possesses a relative value, although the figures those of the respective districts as ordered in Government of Bengal, Municipal Department, letter No. 118 San., dated the 8th February 19 Government of India, Education Department, letter No. 93, dated the 26th March 1918.

A. C. CHATTERJI, M.B., D.P.H., LT.-COL., I.M.S., *Director of Public Health, Bengal.*

Statement showing the gauge readings at Dacca Waterworks Station on the river Buriganga for the week ending 10th April 1937.

Date.	At highest water.		At lowest water.		Commencement of—		Remarks.	
	Time.	Reading.	Time.	Reading.	Ebb tide.	Flow tide.	7 a.m.	5 p.m.
1937.								
4th April ..	18-0	4·15	12-0	3·4	18-14	12-14	4·1	4·05
5th " ..	7-0	4·15	13-0	3·2	7-12	13-12	4·15	3·6
6th " ..	7-0	4·2	14-0	3·0	7-12	14-14	4·2	3·25
7th " ..	8-0	4·4	16-0	3·25	8-10	16-12	4·3	3·4
8th " ..	9-0	4·65	17-0	3·6	9-10	17-10	4·45	3·6
9th " ..	9-30	5·1	18-0	4·1	9-40	18-8	4·8	4·2
10th " ..	10-0	5·4	18-0	4·55	10-8	18-6	5·0	4·7

Notable high and low water-levels of previous years.

		Taken at high tide.			Taken at low tide.
27th August	1906 ..	70·5	23rd February	1907 ..	51·06
5th September	1909 ..	66·86	13th "	1908 ..	51·06
10th August	1910 ..	69·86	12th March	1912 ..	51·06
1st "	1911 ..	68·46	6th "	1914 ..	50·60
13th "	1912 ..	67·16	22nd February	1915 ..	50·30
31st "	1915 ..	69·7	15th "	1916 ..	50·60
8th "	1916 ..	68·1	3rd March	1917 ..	51·0
12th "	1917 ..	67·1	21st February	1918 ..	51·40
13th "	1918 ..	69·12	26th "	1919 ..	50·4
2nd "	1919 ..	66·8	18th "	1920 ..	50·9
8th September	1920 ..	66·9	19th "	1921 ..	50·9
28th July	1921 ..	68·4	8th March	1922 ..	51·05
10th August	1922 ..	68·00	14th "	1923 ..	50·8
31st July	1923 ..	66·15	16th February	1924 ..	50·50
29th August	1924 ..	68·82	5th March	1925 ..	50·9
8th September	1925 ..	68·52	9th February	1926 ..	2·2
15th August	1926 ..	19·6	27th "	1927 ..	2·10
17th September	1927 ..	18·70	16th "	1928 ..	2·2
22nd August	1928 ..	20·0	21st "	1929 ..	2·0
13th July	1929 ..	17·8	24th "	1930 ..	2·3
12th September	1930 ..	18·65	28th "	1931 ..	2·2
16th August	1931 ..	21·7	18th "	1932 ..	1·8
6th September	1932 ..	18·5	6th "	1933 ..	2·10
7th "	1933 ..	17·80	26th March	1934 ..	2·40
23rd August	1934 ..	19·35	15th February	1935 ..	1·70
1st September	1935 ..	19·80	3rd March	1936 ..	1·90
21st August	1936 ..	19·35			

N.B.—Zero of the gauge at Dacca Waterworks prior to 11 a.m. on the 8th January 1926= —48·51 with reference to P. W. D. datum.

Zero of the gauge at Dacca Waterworks since 11 a.m. of the 8th January 1926=0·00 with reference to P. W. D. datum.

D. N. MUKHERJI, for *Executive Engineer,*
Khulna Division.

Khulna, the 17th April 1937.

DISTRICT REPORTS ON WEATHER AND CROPS.

For the week ending on the 14th April 1937.

Summary.—Excepting light and scattered showers in places, the weather continued hot and dry during the week. Good and general rainfall is essential for progress with sowings of autumn crops and for the growth of the young plants, prospects of standing crops are generally fair. Harvesting of *rabi* crops is approaching completion. The average price of common rice for the province has risen by about 0·46 per cent. as compared with that of the previous week.

Serial No.	District and sub-division.	Rainfall.	Price of common rice, in seers, per rupee.		Character of the weather, condition of crops, etc.
			This week.	Previous week.	
1	2	3	4	5	6
		Inches.			
1	24-Parganas ..	Nil	10⅝	10⅝	Weather seasonable. Prospect of crops is fair. Fodder and water are sufficient. No export or import of paddy is reported.
	Diamond Harbour..	Nil	12	12	
	Barrackpore ..	Nil	12	12	
	Baraset ..	Nil	12	12	
	Basirhat ..	Nil	13	13	
2	Nadia ..	0·38	11 7/16	12 5/16	Weather seasonable. Prospect of standing crops is, on the whole, fair. *Rabi* crops are being harvested. Fodder and water are available. No large import or export.
	Kushtia ..	0·95	11½	11	
	Meherpur ..	0·25	10	10	
	Chuadanga ..	0·00	11	11½	
	Ranaghat ..	0·00	9½	9½	
3	Murshidabad ..	0·10	12½	12½	Weather seasonable. Prospects of crops are favourable. Fodder and water are sufficient. No large import or export. Stock of rice is sufficient.
	Lalbagh ..	Nil	12	13	
	Jangipur ..	0·43	13½	13½	
	Kandi ..	Nil	14	14	
4	Jessore ..	Nil	11½	11½	Weather seasonable. Prospects of standing crops are fair. No large export or import. Fodder and water are sufficient. Cattle-disease is reported from Sripur police-station.
	Jhenidah ..	Nil	12	12	
	Magura ..	0·05	11	11	
	Narail ..	Nil	11	11	
	Bongaon ..	Nil	12	12	
5	Khulna ..	Nil	13	13	Weather seasonable. Fodder and water are sufficient.
	Satkhira ..	Nil	13	13	
	Bagerhat ..	Nil	11	10½	

Serial No.	District and sub-division.	Rainfall.	Price of common rice, in seers, per rupee.		Character of the weather, condition of crops, etc.
			This week.	Previous week.	
1	2	3	4	5	6
		Inches.			
6	Burdwan ..	Nil	12½	12½	Weather seasonable. Condition of crop is fair. Fodder and water are sufficient.
	Asansol ..	Nil	12	12	
	Katwa ..	0·10	13	13	
	Kalna ..	Nil	11¼	11¼	
7	Birbhum ..	0·19	13	14	Weather seasonable. Prospects of standing crops are good. Fodder and water are sufficient.
	Rampurhat ..	Nil	13	13	
8	Bankura ..	0·58	13	13	Weather seasonable. Lands are being ploughed and manured. Prospects of standing crops are good. No large export or import. Fodder and water are sufficient. Cattle-disease is reported from Raipur thana.
	Vishnupur ..	0·00	13¾	13¾	
9	Midnapore ..	Nil	13	13	Scarcity of water is felt in Tamluk, Panskura, Nandigram and Moyna thanas.
	Contai ..	Nil	14	15	
	Tamluk ..	Nil	13	13	
	Ghatal ..	Nil	14½	14½	
	Jhargram ..	Nil	13	13	
10	Hooghly ..	Nil	10½	10½	Weather seasonable. Fodder and water are sufficient.
	Serampore ..	Nil	10½	10½	
	Arambagh ..	Nil	11	11	
11	Howrah ..	Nil	10	10	Weather seasonable. Its effects are good. Fodder and water are sufficient.
	Uluberia ..	Nil	10	10	
12	Rajshahi (Rampur-Boalia).	Nil	10	10	Weather seasonable. Fodder and water are sufficient.
	Naogaon ..	Nil	10½	11½	
	Nator ..	Nil	11½	10½	
13	Dinajpur ..	0·04	9	10	Weather seasonable. Fodder and water are sufficient. Cattle-disease is reported from Khansama thana.
	Thakurgaon ..	Nil	13	13	
	Balurghat ..	Nil	13 5/16	13 5/16	
14	Jalpaiguri ..	0·03	13	13	Weather seasonable. Rainfall scanty, hampers sowing of *bhadoi* paddy and jute. Harvesting of tobacco is going on. Fodder and water are sufficient.
	Alipur ..	0·32	11	11	

Serial No.	District and sub-division.	Rainfall.	Price of common rice, in seers, per rupee.		Character of the weather, condition of crops, etc.
			This week.	Previous week.	
1	2	3	4	5	6
		Inches.			
15	Darjeeling ..	Nil	8	8	Fodder and water are sufficient.
	Kurseong ..	Nil	9	9	
	Siliguri ..	Nil	11½	11½	
	Kalimpong ..	Nil	7½	7¾	
16	Rangpur ..	Nil	12	11½	Weather seasonable. Rain is needed. Prospects of standing crops are fair. No large export or import. Fodder and water are sufficient. Sowing of *aus* paddy and jute continues. Cattle-disease exists in Kurigram subdivision.
	Nilphamari ..	Nil	11	11	
	Kurigram ..	Nil	10	10	
	Gaibandha ..	(*n*)	(*n*)	10	
17	Bogra ..	Nil	12¾	12¾	Weather sultry. Sowing of jute and *aus* paddy is being delayed for want of rain. No damage to crops. Fodder and water are sufficient.
18	Pabna ..	0·40	12	12	Weather seasonable, but more rain is badly wanted for cultivation of or growth of *aus* paddy and jute. Condition of standing crops is fair. Fodder and water are sufficient.
	Serajganj ..	0·16	10 5/16	10 5/16	
19	Malda ..	0·07	12½	13	Weather dry and seasonable. Harvesting of *rabi* crops continues. Fodder and water are available. A good shower of rain is wanted for cultivating land for *bhaodi* and jute.
20	Cooch Behar ..	(*n*)	(*n*)	(*n*)	Report not received.
21	Dacca ..	0·04	10½	10½	Rainfall at North Sadar (Kapasia) 0·61 inches. Weather seasonable. Prospects of standing crops are reported to be fair. No large export or import. Fodder and water are available. Cattle-disease exists in Munshiganj subdivision.
	Manikganj ..	0·05	10½	10½	
	Narayanganj ..	0·09	12	12	
	Munshiganj ..	Nil	11	11	

(*n*) Not reported.

Serial No.	District and sub-division.	Rainfall.	Price of common rice, in seers, per rupee.		Character of the weather, condition of crops, etc.
			This week.	Previous week.	
1	2	3	4	5	6
		Inches.			
22	Mymensingh ..	0·02	12	11½	Weather hot. More rain is necessary. Agricultural operation is fair. Fodder and water are available.
	Jamalpur ..	(n)	(n)	11½	
	Tangail ..	0·12	11	11	
	Netrakona ..	Nil	12½	12½	
	Kishorganj ..	0·15	11	10½	
23	Faridpur ..	0·50	11	12	Weather seasonable. Condition of standing crops is fair except in Madaripur for continued drought. Fodder and water are sufficient.
	Goalundo (Rajbari)	0·00	10½	10½	
	Madaripur ..	0·00	11½	11½	
	Gopalganj (a) ..	1·21	11	11	
24	Bakarganj (Barisal)	Nil	11	11	Weather seasonable with a little cold at night. Prospects of standing crops are good in Pirojpur, Patuakhali and Sadar and fair in Bhola. Fodder and water are sufficient. Cattle-disease is reported from Bhola subdivision.
	Pirojpur ..	Nil	11½	11½	
	Patuakhali ..	Nil	10½	10½	
	Dakshin Shabazpur (Bhola).	Nil	11	11	
25	Chittagong ..	Nil	10 11*	10 11*	Weather seasonable. Harvesting of *rabi* crops is in progress and its condition is fair. Fodder and water are sufficient. Cattle-disease exists in Sadar and Satkania. Panga salt sells at 14 seers at Sadar and 13 seers at Cox's Bazar.
	Cox's Bazar ..	0·17	12	(n)	
26	Tippera (Comilla) ..	Nil	12½	13	Weather hot.
	Brahmanbaria ..	Nil	13	13	
	Chandpur ..	Nil	12	12	
27	Noakhali ..	Nil	12	12	Fodder and water are sufficient. Cattle-disease exists in Feni and Chhagalnaiya thanas.
	Feni ..	Nil	13	13	
28	Chittagong Hill Tracts.	Nil	14	14	Weather seasonable. Its effects are favourable. Fodder and water are sufficient.
29	Tripura State ..	(n)	(n)	(n)	Reports not received.

(a) The rainfall at Haridaspur, which is very near to Gopalganj, is shown here.
(n) Not reported. * Burma rice.

S. ABDULLAH, for *Director of Agriculture, Bengal.*

Dacca, the 19th April 1937.

Vital statistics of towns with a population of 50,000 and over of the Bengal Presidency for the week ending Saturday, the 3rd April 1937.

Districts.	Nos.	Towns.	Population under registration according to census of 1931.			Births registered.		Deaths registered.																							
			Male.	Female.	Total.	Number registered (excluding still-births).	Still-births registered.	Cholera.	Small-pox.	Plague.	Malaria.	Enteric fever.	Measles.	Relapsing fever (Spirochaetal).	Kala-azar.	Influenza.	Cerebro-spinal fever.	Other fevers.	Dysentery.	Diarrhœa.	Pneumonia.	Pulmonary tuberculosis.	Other respiratory diseases.	Injuries including suicide.	Deaths from child-birth.	Other causes.	Total of all causes. Male.	Total of all causes. Female.	Total of all causes. Total.	Total of corresponding week of the previous year. Male.	Total of corresponding week of the previous year. Female.	Total of corresponding week of the previous year. Total.
Calcutta ..	1	Calcutta ..	778,817	362,045	1,140,862	441	42	11	14	..	15	28	5	..	1	5	9	19	21	9	39	73	83	16	3	275	336	290	626	608	527	1,135
Burdwan ..	2	Asansol Mining Settlement.	209,544	173,136	382,680	90	3	2	1	..	..	..	3	..	..	..	..	25	1	..	6	1	2	210*	2	28	187	94	281	88	85	173
Howrah ..	3	Howrah ..	145,120	79,753	224,873	123	4	1	..	..	1	2	..	..	..	..	..	1	5	5	11	5	19	1	1	45	57	40	97	125	142	267
Dacca ..	4	Dacca ..	79,365	59,153	138,518	129	3	4	..	..	1	3	2	..	2	..	..	..	3	4	7	..	11	1	..	19	25	32	57	42	46	88
24-Parganas	5	Bhatpara ..	60,134	24,841	84,975	43	3	2	..	..	..	..	..	..	..	..	..	16	2	1	2	1	2	..	1	9	19	17	36	28	16	44
	6	Garden Reach.	36,131	19,741	55,872	28	2	..	..	..	..	2	..	..	..	..	..	3	1	..	1	..	3	..	..	8	10	8	18	9	8	17
Chittagong ..	7	Chittagong	35,049	18,107	53,156	23	..	..	..	..	..	5	..	..	..	..	..	2	..	..	..		..	2	1	7	10	7	17	9	2	11

*Due to gas explosion in Poidih Colliery on the 18th December 1936.

A. C. CHATTERJI, M.B., D.P.H., LT.-COL., I.M.S., *Director of Public Health, Bengal.*

Calcutta, the 10th April 1937.

COMMUNICATIONS AND WORKS DEPARTMENT,

Statement showing heights above P. W. D. datum and low water in the rivers Ganges, Bhagirathi, Jalangi and Brahmaputra for the

Date.	River Ganges.													
	Mirzapore. Zero of gauge is 200·00 ft. above P. W. D. datum.			Benares. Zero of gauge is 197·05 ft. above P. W. D. datum.		Buxar.* Zero of gauge is 169·91 ft. above Bengal P. W. D. datum.		Dinapore. Zero of gauge is 185·51 ft. above P. W. D. datum.		Monghyr. Zero of gauge is at P. W. D. datum.		Rajmahal. Zero of gauge is 0·42 ft. above P. W. D. datum. (A)	
	Distance in miles.	From Allahabad 86.		From Allahabad 134.	From Mirzapore 48.	From Benares 90.		From Benares 177.	From Buxar 87.	From Benares 287.	From Dinapore 110.	From Benares 407.	From Monghyr 120.
	Highest gauge reading.	2nd September 1916. 265·97 ft.		2nd September 1916. 244·55 ft.		7th September 1919. 203·40 ft.		21st August 1923. 172·41 ft.		8th September 1901. 129·60 ft.		15th August 1913. 90·37 ft.	
	Lowest gauge reading.	11th April 1878. 198·92 ft.		20th May 1879. 191·70 ft.		15th May 1914. 161·65 ft.		26th April 1902. 136·11 ft.		2nd May 1914. 95·75 ft.		30th April 1936. 54·97 ft.	
		Height above zero of gauge.	Height above P. W. D. datum.	Height above zero of gauge.	Height above P. W. D. datum.	Height above zero of gauge.	Height above P. W. D. datum.	Height above zero of gauge.	Height above P. W. D. datum.	Height above zero of gauge.	Height above P. W. D. datum.	Height above zero of gauge.	Height above P. W. D. datum.
1	2	3	4	5	6	7	8	9	10	11	12	13	14
1st ..	..	12·75	212·75	0·58	197·63	3·67	173·58	10·80	146·31	102·30	102·30	58·25	58·67
2nd ..	..	12·75	212·75	0·50	197·55	3·67	173·58	10·80	146·31	102·20	102·20	58·20	58·62
3rd ..	..	12·67	212·67	0·50	197·55	3·67	173·58	10·80	146·31	102·20	102·20	58·15	58·57
4th ..	..	12·67	212 67	0·42	197·47	3·58	173·49	10·80	146·31	102·20	102·20	58·10	58·52
5th ..	..	12·67	212·67	0·42	197·47	3·58	173·49	10·80	146·31	102·10	102·10	58·05	58·47
6th ..	..	12·58	212·58	0·42	197·47	3·58	173·49	10·80	146·31	102·10	102·10	58·00	58·42
7th ..	..	12·58	212·58	0·33	197·38	3·58	173·49	10·80	146·31	102·10	102·10	57·95	58·37
8th ..	..	12·58	212·58	0·33	197·38	3·58	173·49	10·80	146·31	102·00	102·00	57·90	58·32
9th ..	..	12·58	212·58	0·33	197·38	3·58	173·49	10·80	146·31	102·00	102·00	57·85	58·27
10th ..	..	12·50	212·50	0·33	197·38	3·50	173·41	10·80	146·31	101·90	101·90	57·80	58·22
11th ..	..	12·50	212·50	0·50	197·55	3·50	173·41	10·80	146·31	101·90	101·90	57·80	58·22
12th ..	..	12·50	212·50	0·67	197·72	3·50	173·41	10·80	146·31	101·80	101·80	57·85	58·27
13th ..	..	12·50	212·50	0·67	197·72	3·75	173·66	10·80	146·31	101·90	101·90	57·90	58·32
14th ..	..	12·50	212·50	0·50	197·55	3·83	173·74	10·80	146·31	102·00	102·00	57·95	58·37
15th ..	..	12·50	212·50	0·50	197·55	3·83	173·74	10·80	146·31	102·10	102·10	58·20	58·62
16th ..	..	12·50	212·50	0·42	197·47	3·83	173·74	10·80	146·31	102·10	102·10	58·50	58·92
17th ..	..	12·50	212·50	0·42	197·47	3·75	173·66	10·80	146·31	102·10	102·10	58·50	58·92
18th ..	..	12·50	212·50	0·33	197·38	3·67	173·58	10·80	146·31	102·10	102·10	58·50	58·92
19th ..	..	12·50	212·50	0·33	197·38	3·67	173·58	10·80	146·31	102·30	102·30	58·50	58·92
20th ..	..	12·50	212·50	0·33	197·38	3·67	173·58	10·80	146·31	102·50	102·50	58·60	59·02
21st ..	..	13·00	213·00	1·00	198·05	3·67	173·58	10·80	146·31	102·60	102·60	58·80	59·22
22nd ..	..	14·00	214·00	1·42	198·47	3·67	173·58	10·80	146·31	102·60	102·60	58·90	59·32
23rd ..	..	14·00	214·00	1·50	198·55	3·92	173·83	10·80	146·31	102·70	102·70	58·90	59·32
24th ..	..	14·17	214·17	2·08	199·13	4·00	173·91	10·80	146·31	102·70	102·70	59·00	59·42
25th ..	..	14·33	214·33	2·17	199·22	4·58	174·49	10·80	146·31	102·70	102·70	52·50	59·52
26th ..	..	14·50	214·50	2·17	199·22	4·67	174·58	10·80	146·31	102·80	102·80	52·60	59·62
27th ..	..	14·83	214·83	2·50	199·55	4·83	174·74	10·80	146·31	102·80	102·80	52·70	59·72
28th ..	..	14·83	214·83	2·50	199·55	4·92	174·83	10·80	146·31	102·80	102·80	52·70	59·72
Average level	..	13·04	213·04	0·86	197·91	3·83	173·74	10·80	146·31	102·27	102·27	Vide foot note below	

NOTE.—Since the 1st January 1929 the datum of all gauges has been finally altered to refer to the Bengal Public Works Department datum which is 6·25 feet above levels recorded since each gauge was established have been prepared.

*The zero of the Buxar gauge has been checked from the G. T. S. Bench marks Nos. 125 and 126 on line 70K and found to be 169·91 feet above the Bengal P. W. D.

†On and from 1st January 1931, High water level and Low water level readings are shown at Swarupganj.

(A) The value of zero of gauge at the station was 0·42 ft. from 1st February 1937 to 24th February 1937; and 7·02 ft. from 25th February 1937 to 28th February February 1937 to 28th February 1937, 52·63 feet.

The 12th April 1937.

IRRIGATION BRANCH, BENGAL.

month of February 1937 and the highest reading of each gauge above P. W. D. datum as well as the lowest gauge reading since 1876.

				River Bhagirathi.		River Jalangi.				River Brahmaputra.	
Rampur-Boalia. Zero of gauge is 20·26 ft. above P. W. D datum.		Goalundo. Zero of gauge is 1·409 ft. above Bengal P. W. D. datum.		Berhampore. Zero of gauge is at P. W. D. datum.		Swarupganj.† Zero of gauge is at P. W. D. datum.				Gauhati. Zero of gauge is 136·958 ft. above P. W. D. datum.	
From Benares 471.	From Rajmahal 64.	From Benares 591	From Rampur-Boalia 120.								
26th August 1879. 64·24 ft.		17th to 20th August 1936. 30 009 ft.		14th August 1890. 63·46 ft.		25th September 1900. 35·30 ft.				24th August 1906. 169·25 ft.	
24th April 1931. 32·05 ft.		8th February 1914. 2·41 ft.		26th May 1884. 32·00 ft.		7th May 1896. 2·11 ft.				9th and 10th February 1937 127·958 ft.	
Height above zero of gauge.	Height above P. W. D. datum.	Height above zero of gauge.	Height above P. W. D. datum.	Height above zero of gauge.	Height above P. W. D. datum.	Height above zero of gauge.		Height above P. W. D. datum.		Height above zero of gauge.	Height above P. W. D. datum.
						H. W. L.	L. W. L.	H. W. L.	L. W. L.		
15	16	17	18	19	20	21	22	23	24	25	26
7·95	37·21	8·20	9·609	34·85	34·85	5·14	4·81	5·14	4·81	Below zero 8·50	128·458
7·90	37·16	8·10	9·509	34·85	34·85	4·74	4·60	4·74	4·60	8·60	128·35
7·80	37·06	8·10	9·509	34·80	34·80	4·58	4·49	4·58	4·49	8·70	128·25
7·85	37·11	8·00	9·409	34·80	34·80	4·50	4·41	4·50	4·41	8·70	128·25
7·80	37·06	7·90	9·309	34·80	34·80	4·41	4·34	4·41	4·34	8·80	128·15
7·75	37·01	7·80	9·209	34·80	34·80	4·34	4·29	4·34	4·29	8·80	128·158
7·70	36·96	7·70	9·109	34·80	34·80	4·32	4·28	4·32	4·28	8·80	128·158
7·65	36·91	7·70	9·109	34·80	34·80	4·33	4·27	4·33	4·27	8·90	128·058
7·60	36·86	7·70	9·109	34·75	34·75	4·43	4·28	4·43	4·28	9·00	127·958
7·50	36·76	7·80	9·209	34·75	34·75	4·70	4·34	4·70	4·34	9·00	127·958
7·50	36·76	7·80	9·209	34·75	34·75	5·22	4·45	5·22	4·45	8·80	128·158
7·45	36·71	7·90	9·309	34·75	34·75	5·75	4·74	5·75	4·74	8·70	128·258
7·55	36·81	8·00	9·409	35·05	35·05	6·32	5·12	6·32	5·12	8·70	128·258
7·55	36·81	8·00	9·409	35·05	35·05	6·78	5·40	6·78	5·40	8·80	128·158
7·60	38·86	7·90	9·309	35·00	35·00	8·06	6·30	8·06	6·30	8·80	128·158
7·60	38·86	7·90	9·309	35·00	35·00	9·04	8·70	9·04	8·70	8·90	128·058
7·75	37·01	8·10	9·509	35·15	35·15	8·46	8·06	8·46	8·06	8·60	128·358
7·90	37·16	8·10	9·509	35·25	35·25	7·55	7·11	9·55	7·11	8·60	128·358
7·90	37·16	8·00	9·409	35·20	35·20	6·76	6·40	6·76	6·40	8·40	128·558
7·90	37·16	7·40	8·809	35·10	35·10	6·10	5·79	6·10	5·79	7·60	129·358
7·85	37·11	7·40	8·809	35·05	35·05	5·70	5·40	5·70	5·40	7·30	129·658
8·00	37·26	7·30	8·709	35·10	35·10	5·52	5·42	5·52	5·42	7·00	129·958
8·10	37·36	7·30	8·709	35·05	35·05	5·68	5·30	5·68	5·30	7·40	129·558
8·15	37·41	7·20	8·609	35·00	35·00	5·88	5·36	5·88	5·36	7·60	129·358
8·15	37·41	7·10	8·509	34·95	34·95	6·40	5·68	6·40	5·68	7·80	129·158
8·20	37·46	7·30	8·709	34·90	34·90	7·48	6·70	7·48	6·70	7·80	129·158
8·30	37·56	7·40	8·809	34·90	34·90	7·66	7·10	7·66	7·10	7·90	129·058
8·40	37·66	7·50	8·909	34·90	34·90	7·31	6·56	7·31	6·56	7·90	129·058
7·83	37·09	7·74	9·149	34·93	34·93	5·97	5·49	5·97	5·49	8·37 Below zero	128·588

the Kidderpore Old Dock Sill. The values of the highest and lowest readings have similarly been altered. Printed notes on the correction to be applied to all reduced, datum.

1937. Hence, the average height above Zero of gauge at the station is twice shown thus :—from 1st February 1937 to 24th February 1937, 58·26 feet and from 25th

J. F. RUSSELL, *Personal Assistant to the Chief Engineer to the Government of Bengal, Communications and Works Department, Irrigation Branch.*

Vital statistics of towns with a population of 50,000 and over of the Bengal Presidency for the week ending Saturday, the 10th April 1937.

Districts.	Nos.	Towns.	Population under registration according to census of 1931.			Births registered.		Deaths registered.																								
			Male.	Female.	Total.	Number registered (excluding still-births).	Still-births registered.	Cholera.	Small-pox.	Plague.	Malaria.	Enteric fever.	Measles.	Relapsing fever (Spirochaetal).	Kala-azar.	Influenza.	Cerebro-spinal fever.	Other fevers.	Dysentery.	Diarrhœa.	Pneumonia.	Pulmonary tuberculosis.	Other respiratory diseases.	Injuries including suicide.	Deaths from child-birth.	Other causes.	Total of all causes.			Total of corresponding week of the previous year.		
																											Male.	Female.	Total.	Male.	Female.	Total.
Calcutta ..	1	Calcutta	778,817	362,045	1,140,862	396	38	7	16	..	5	13	8	..	1	2	15	18	29	15	33	63	71	15	1	260	317	255	572	597	517	1,114
Burdwan ..	2	Asansol Mining Settlement.	209,544	173,136	382,680	171	..	5	..	..	2	..	..	..	..	..	1	33	1	..	7	1	5	1	2	40	56	42	98	70	54	124
Howrah ..	3	Howrah	145,120	79,753	224,873	125	5	3	..	..	1	5	2	..	..	..	..	1	11	9	10	5	19	2	1	45	52	62	114	131	120	251
Dacca ..	4	Dacca	79,365	59,153	138,518	109	6	5	..	..	..	5	..	..	..	..	..	..	8	4	18	3	14	1	1	28	39	48	87	46	52	98
24-Parganas	5	Bhatpara ..	60,154	24,841	84,975	30	..	1	..	..	..	1	1	..	..	..	..	8	1	1	1	2	1	2	..	5	13	11	24	23	19	42
	6	Garden Reach	36,131	19,741	55,872	15	..	..	..	..	4	1	1	..	..	..	..	1	..	3	2	2	1	..	..	3	5	13	18	4	8	12
Chittagong ..	7	Chittagong	35,049	18,107	53,156	25	..	1	..	..	..	..	..	..	..	..	..	6	2	..	..	..	..	1	..	8	11	7	18	3	3	6

A. C. CHATTERJI, M.B., D.P.H., LT.-COL., I.M.S., *Director of Public Health, Bengal.*

Calcutta, the 17th April 1937

CORPORATION OF CALCUTTA.

Central Municipal Office, the 16th April 1937.

NOTICES.

It is hereby notified for general information that the Corporation of Calcutta under powers vested in them in this behalf have by a resolution, dated the 30th March 1937, prescribed the alignment of the 20 feet portion of Ballygunge Place running westward from Dihi-Serampore Lane to a width of 30 feet in Ward No. 27.

A copy of the plan prepared in this behalf may be seen in the office of the Chief Valuer and Surveyor of the Corporation any day except Saturday between the hours of 11 a.m. and 3 p.m. and on Saturday between the hours of 11 a.m. and 1 p.m. on payment of usual fees.

It is hereby notified for general information that the Corporation of Calcutta under powers vested in this behalf have by a resolution, dated the 30th March 1937, cancelled the existing alignment of the 40 feet projected public street connecting Ballygunge Place with Dihi-Serampore Lane in Ward No. 27, which was originally sanctioned on 25th January 1923, by the General Committee of the Corporation as constituted under Act III B.C. of 1899.

A copy of the plan showing the alignment as cancelled by the Corporation, dated 30th March 1937, may be seen in the office of the Chief Valuer and Surveyor of the Corporation any day except Saturday between the hours of 11 a.m. and 3 p.m. and on Saturday between the hours of 11 a.m. and 1 p.m. on payment of usual fees.

By-election to elect a Councillor of the Corporation of Calcutta for the Special Constituency comprising the Calcutta Trades Association.

In compliance with provisions of sub-section (2) of section 28 of Act III (B. C.) of 1923 and rule 15 (2) of the rules, made by the Local Government under section 30 of the said Act, it is hereby notified that Mr. Mackertich John has been declared duly elected as a Councillor of the Corporation of Calcutta for the Special Constituency comprising the Calcutta Trades Association.

Central Municipal Office, the 17th April 1937.

It is hereby notified for general information that the Corporation of Calcutta under powers vested in them in this behalf have by a resolution, dated the 18th March 1937, prepared a scheme and plan modifying the alignment of the 40 feet projected public street running over premises No. 39, Old Ballygunge 2nd Lane in Ward No. 21, which was originally sanctioned on 11th November 1920, by the General Committee of the Corporation as constituted under Act III (B. C.) of 1899.

A copy of the plan prepared in this behalf may be seen in the office of the Chief Valuer and Surveyor of the Corporation on all working days except Saturday between 11 a.m. and 3 p.m. and on Saturday between 11 a.m. and 1 p.m. on payment of usual fees.

S. CHATTERJI,

Chief Executive Officer (offg.).

DEPARTMENT OF AGRICULTURE, BENGAL.

Dacca, the 7th April 1937.

Third Forecast of the Wheat Crop of Bengal, 1936-37.

(*Note.*—On an average of the five years ending 1934-35, the area under wheat in Bengal has represented some 0·4 per cent. of the total area under wheat in India. The ratio of the irrigated wheat acreage to total wheat acreage in (*a*) British India and (*b*) in the territory now reported on has, in the five years ending 1934-35, averaged (*a*) 41·3 and (*b*) 9·7 per cent., respectively.)

Character of the season.—Since the submission of the second forecast in February last, conditions were generally favourable except in the important districts of Nadia, Murshidabad and Malda where heavy rain affected the crop. Injury by insects is also reported from Malda. On the whole, the season may be regarded as a satisfactory one for the crop this year.

Acreage.—According to the estimates of the district officers the total area sown amounts to 149,500 acres this year as against 127,100 acres both in the corresponding and final forecasts of last year.

Outturn.—The average provincial outturn as worked out from district estimates is 83 per cent. as against 70 per cent. both in the corresponding and final forecasts of last year.

Taking the normal yield to be 10 maunds per acre, the gross yield of the crop for the province is estimated at 45,600 tons this year as against 32,700 tons both in the corresponding and final forecasts of last year.

M. CARBERY,

Director of Agriculture, Bengal.

APPENDIX.

Third Forecast of the Wheat Crop of Bengal, 1936-37.

District.	Estimated normal area under wheat crop.	Estimated area under wheat.		Estimated outturn as a percentage of the normal yield per unit of area.		Date on which the harvesting of the crop was begun this year and whether that date was early, normal or late.	Remarks by District Officers.
		Last year.	This year.	Last year.	This year.		
	Acres.	Acres.	Acres.				
Nadia ..	23,100	6,400	10,700	33	67	March. Normal ..	The outturn is anticipated to be below the normal owing to damage to the extent of 4 annas by excessive rainfall.
Murshidabad ..	47,100	24,200	43,800	67	75	Ditto ..	The outturn is anticipated to fall below the normal due to damage by heavy rain.
Jessore ..	700	300	300	66	66	February. Normal	The outturn considerably fell below the normal on account of unfavourable weather condition all along.
Burdwan ..	1,500	1,300	1,400	75	100	....	The weather has been favourable.
Birbhum ..	4,700	3,700	4,000	58	100	March. Normal ..	Ditto.
Bankura ..	6,500	5,200	5,500	67	92	March ..	The weather has been favourable. The outturn is anticipated to be a little below the normal owing to heavy rain.
Midnapore ..	800	700	600	58	67	End of March. Normal.	The weather has been fair.
Hooghly ..	200	200	200	50	83	....	The weather has been fairly favourable.
Rajshahi ..	7,800	10,500	10,500	67	92	March. Normal ..	The weather has been favourable.
Dinajpur ..	1,300	2,400	2,400	100	100	End of February. Normal.	Ditto.
Jalpaiguri ..	800	600	700	83	87	March. Normal ..	The weather has been fairly favourable.
Darjeeling ..	2,900	3,400	3,400	100	100	Middle of March. Normal.	The weather has been favourable.
Rangpur ..	3,700	3,900	3,900	103	103	March. Normal ..	Ditto.
Bogra ..	700	1,500	1,500	50	70	Not yet commenced	The weather has been unfavourable.
Pabna ..	8,800	9,500	6,800	83	83	Middle of March. Normal.	The outturn in anticipated to fall below the normal due to continued drought.
Malda ..	43,000	43,000	44,000	67	83	Not yet commenced	The outturn is anticipated to fall below the normal owing to some damage caused by insect-pests and rain.
Dacca ..	3,300	7,300	6,500	77	100	March. Normal ..	The weather has been favourable.
Mymensingh ..	600	500	500	75	75	Middle of March. Normal.	The weather has been fair.
Faridpur ..	2,800	2,500	2,800	92	92	First week of March	The weather has been favourable.
Total Bengal ..	160,300	127,100	149,500	70	83		

Resolution on the Report on the Administration of the Excise Department in the Presidency of Bengal for the year 1935-36.

GOVERNMENT OF BENGAL.

FOREST AND EXCISE DEPARTMENT.

Excise.

RESOLUTION—No. 8747Ex.

Calcutta, the 19th April 1937.

Read—

Report on the Administration of the Excise Department in the Presidency of Bengal for the year 1935-36.

Mr. D. MacPherson, I.C.S., remained in administrative charge of the department throughout the year except for the period from 1st April 1935 to 17th June 1935, when Mr. S. K. Haldar, I.C.S., was in charge. Babu A. K. Basu worked as the Collector of Excise, Calcutta, and was also in charge of the Excise Intelligence Bureau. Rai Bahadur T. Bhattacharjya, Deputy Commissioner, was in charge of the general inspection and prevention work and in addition held charge of the Matches, Sugar and Tobacco Branches.

For the past few years the excise policy of Government has been "maximum revenue with minimum consumption". The principal change that has been effected in the policy of the department since its reorganisation in 1916 has been the adoption of the Fixed Fee System of Licensing, with corresponding fixation of retail prices for excisable articles in 1917-18 in Calcutta, and from 1917-18 to 1921-22 in the mufassal. With a view to counteract the fall in revenue the auction system of licensing was reintroduced in 1933, but subsequently it was found that, though this system resulted at first in a marked improvement, the revenue was not steady. It was decided to revert to the Fixed Fee System as that system was considered to place the revenue on a more stable basis and to result in the better management of excise shops. Popular control over licensing and location of shops has been introduced. In the selection of licensees the policy of Government has been for the last few years to give preference to educated young men of the *bhadralok* class with a view to providing them with employment and placing the business in the hands of a better educated class. Facilities to enable them to take up the business were given by the reduction of the rate of advance fees from one and half months to fifteen days.

The following measures have been adopted with a view to give effect to the policy of restricted supply and control over consumption of excisable articles:—

(*i*) Levy of a sliding scale of rates of taxation on liquor and drugs with adequate and suitable regulations to control prices for the consumer.

(*ii*) Gradual reduction in the number of places of retail vend.

(*iii*) Effective control over the manufacture and wholesale vend.

(*iv*) Regulation and gradual restriction of hours of sale.

There are Licensing Boards in all the districts except Darjeeling, where there is an Excise Advisory Committee. They functioned satisfactorily during the year in controlling the number and location of shops and also in regulating the hours of sale in the mufassal shops.

Since 1931, following the general economic depression, illicit distillation of liquor as a means of livelihood has been largely adopted, specially in the Calcutta area. With a view to tackle this problem the Central Detection Department was created in 1933. The activities of the department were extended during the year under review. The results achieved so far by the department are satisfactory.

Revenue fell under almost all heads except *tari* and *bhang*. The total fall was Rs. 4,20,997 compared with the previous year. This is due partly to failure of crops in a part of the Presidency and partly to the prevalence of illicit distillation which is believed to be the principal cause.

The Tree Tax System of taxation on *tari*—a system by which a tax is levied on each date cocoanut and palm trees tapped for the manufacture of *tari*—continued to be in force in the districts of Calcutta, 24-Parganas, Hooghly and Howrah.

The improvement in the imports of potable liquors continued during the year and, owing to cheapness of spirit manufactured and denatured locally, the import of Java spirit is gradually on the decline; Government also observe with satisfaction that the medicinal preparations manufactured in the bonded laboratories in this province, of which there are nine, have, to a considerable extent, replaced articles formerly imported from abroad.

Ganja is produced only in Naogaon in the district of Rajshahi. The area under cultivation was reduced from 870 to 716 bighas and consumption fell by 33 maunds 15 seers, which is attributed to general economic conditions on account of trade depression, failure of crops and the low prices of agricultural products. The co-operation between licensed cultivators and the excise patrol partly in preventing smuggling is worthy of note.

Charas is procured from Central Asia through the medium of licensed contractors in the Punjab. The consumption fell by about 3 maunds, which is attributed to illicit sale of contraband *charas*.

Opium is obtained from the Government Opium Factory at Gazipur in the United Provinces. A system of restricted supply of opium according to local requirements as fixed by the Collectors of districts is in force. The Opium Smoking Act and the rules made thereunder had the desired effect throughout the Presidency, and the number of opium smokers is reported to be gradually decreasing. The regulations prescribed by Government on the recommendations of the League of Nations, relating to import, export or transport of "Dangerous Drugs", which include opium and its derivatives, continued to be in force. In accordance with the restrictions imposed on the consumption of opium in the industrial areas near Calcutta as recommended by the Opium Enquiry Committee the limit of retail sale and private possession continued to be 12 grains in the district of Calcutta and the urban thanas of Hooghly, Howrah and the 24-Parganas lying along the river Hooghly, except under a permit on a medical certificate in which case the limit was fixed at 90 grains.

Out of 13,538 persons prosecuted for various excise offences 11,569 were convicted during the year. Figures for detection indicate that excise crime is most prevalent in the western districts of the province particularly Burdwan and Midnapore. The discovery of an illicit still at 52, Gariahat Road, Calcutta, and the subsequent discovery of the ramifications of the illicit trade connected with it has provided one of the most sensational cases yet brought to light in the history of the excise administration of the province. Government agree with the Commissioner of Excise that the importance of imposing deterrent sentences, particularly in the case of habitual offenders, in excise and opium cases needs to be brought to the notice of trying Magistrates. Government note that the Customs, Police and Railway officials rendered valuable assistance in the detection of excise crimes.

Temperance work was carried on in the districts of Rajshahi, Malda and Darjeeling. In the two former districts though there was no organised temperance campaign, the efforts of the "Bhagat" movement among the aboriginals in Rajshahi and the influence of the Special Officer among the Sonthals in Malda have resulted in some reduction in the drink habit among those people. The educated hillmen of Darjeeling are abstaining more and more from indulgence in liquor, but among the uneducated classes no appreciable change in the habit was noticed. Such results as have been obtained in this district are due to the work of Christian Missions and the Hillmen's Association.

The Government of Bengal have much pleasure in recording their appreciation of the manner in which the work of the department was conducted by Messrs. D. MacPherson and S. K. Haldar. Thanks are also due to the officers mentioned in paragraphs 96 to 98 of the report whose loyal co-operation contributed to the successful working of the department.

O. M. MARTIN,

Secy. to the Govt. of Bengal.

Printed and published by the Superintendent, Government Printing, Bengal Government Press, Alipore, Bengal, on the 22nd April 1937.

Registered No. C207

No. 17 of 1937

The Calcutta Gazette

Published by Authority

THURSDAY, APRIL 29, 1937.

CONTENTS:

	Page.
PART I.—Orders and Notifications by the Governor of Bengal, the Government of Bengal, the High Court, Government Treasury, etc.	975—1014
PART IA.—Orders and Notifications by the Government of India republished for general information	935—939
PART IB.—Educational Notices ..	469—482
PART II.—Advertisements	389—404
PART III.—Acts of the Bengal Legislative Council	*Nil*
PART IV.—Bills introduced in the Bengal Legislative Council, Reports of Select Committees presented or to be presented to that Council and Bills published before introduction in that Council ..	*Nil*
PART V.—Acts of the Indian Legislature assented to by the Governor-General and Ordinances promulgated under section 72 of the Government of India Act—	
The Agricultural Produce (Grading and Marking) Act, 1937	23—25
The Indian Tea Cess (Amendment) Act, 1937	26
The Indian Limitation (Amendment) Act, 1937	27
PART VI.—Bills introduced in the Council of State and Legislative Assembly, Reports of Select Committees presented to the Council and Assembly and Bills published under rule 18 of the Indian Legislative Rules—	
The Indian Oaths (Amendment) Bill, 1937, with Statement of Objects and Reasons	93—94
The Commercial Documents Evidence Bill, 1937, with Statement of Objects and Reasons	95—98
APPENDIX.—General Jury List—List of persons liable to serve on Common and Special Juries in the High Court of Judicature at Fort William in Bengal for the year ensuing from 1st May 1937 pursuant to Act V of 1898	1—498
SUPPLEMENT No. 17 :—	
Cotton Ginning and Pressing—Annual Accounts of the Calcutta Improvement Trust—Weekly Gauge Readings—Weekly Weather and Crop Report—Prices-current—Weekly Vital Statistics—Major and Minor Works and Navigation—Corporation of Calcutta Notice—Statement showing the accounts of the Sinking Funds of the Corporation of Calcutta—Daily Rainfall—Area leased for irrigation ..	465—534

PART I

Orders and Notifications by the Governor of Bengal, the Government of Bengal, the High Court, Government Treasury, etc.

HOME DEPARTMENT.

Appointment.

No. 4524A.

Appointments and Transfers.

GENERAL.

24-Parganas-Dacca.—No. 4519A.—3rd April 1937.—In exercise of the powers conferred by sub-section (2) of section 10 of the Code of Criminal Procedure, 1898 (Act V of 1898), the Governor is pleased to appoint Mr. D. L. Mazumdar, I.C.S., officiating Additional District and Sessions Judge, 24-Parganas, to be Additional District Magistrate, Dacca, and to direct that he shall have during the period he is so employed all the powers of a District Magistrate under the said Code and under all other laws in force in that district.

2. This cancels notification No. 2482A., dated the 11th March 1937, appointing him as an Additional District and Sessions Judge, Dacca.

Jessore-Mymensingh.—No. 4478A. — 20th April 1937. — Babu Dhirendra Kumar Mukharji, Subordinate Judge and Assistant Sessions Judge, Jessore, is appointed temporarily to act as an Additional District and Sessions Judge, Mymensingh.

Calcutta.—No. 4483A.—20th April 1937.—The services of Mr. N. G. A. Edgley, I.C.S., Secretary to the Government of Bengal in the Judicial Department and Superintendent and Remembrancer of Legal Affairs, Bengal, are placed temporarily at the disposal of the Governor-General.

Midnapore-24-Parganas.—No. 4488A.—20th April 1937.—Mr. M. O. Carter, I.C.S., officiating Magistrate and Collector, Midnapore, is appointed to act, until further orders, as Magistrate and Collector, 24-Parganas.

Malda-Midnapore.—No. 4492A.—20th April 1937.—Mr. B. R. Sen, I.C.S., Magistrate and Collector, Malda, is appointed to be Magistrate and Collector, Midnapore.

Malda.—No. 4496A.—20th April 1937. — Maulvi Saiyid Abdul Majid, Deputy Magistrate and Deputy Collector, Malda, is appointed temporarily to act as Magistrate and Collector of that district.

ECCLESIASTICAL.

Calcutta.—No. 4446A.—19th April 1937.—The Reverend John Kellas, Professor of the Scottish Church College, Calcutta, is authorised, under section 6 of Act XV of 1872, to solemnize marriages between persons one or both of whom is or are a Christian or Christians, and, under section 9 of the Act, to grant certificates of marriages between persons who are Native Christians.

2. He is also appointed, under Act VI of 1886, to be a Registrar of Births and Deaths for Calcutta.

Dacca.—No. 4449A.—19th April 1937.—In exercise of the powers conferred by section 9 of the Indian Christian Marriage Act, 1872 (XV of 1872), the Governor of Bengal is pleased to grant a license to Babu Sashi Bhusan Roy, an Evangelist of the Baptist Missionary Society, Narayanganj, Dacca, authorising him to grant certificates of marriages between Native Christians.

2. He is also appointed a Registrar of Births and Deaths, under Act VI of 1886, for the district of Dacca.

Leave.

GENERAL.

Mymensingh. — No. 4474A.—20th April 1937.—Rai Sahib Pranendra Narayan Chaudhuri, officiating Additional District and Sessions Judge, Mymensingh, is allowed leave on average pay for one month and fifteen days, under rule 81 (*b*) (*ii*) of the Fundamental Rules, with effect from the 21st April 1937, or any subsequent date on which he may be relieved.

Dinajpur.—No. 9A.D.—23rd April 1937.—Maulvi M. Yusuf, Sub-Deputy Collector, on probation and on deputation to Settlement Training at Dinajpur, was allowed leave from the 2nd to the 9th January 1937, inclusive, viz., earned leave for six days, under rule 10 of the Bengal Services (Revision of Leave) Rules, 1934, and leave on private affairs for the remaining period, under rule 15(*a*) of those Rules.

G. P. HOGG,
Secy. to the Govt. of Bengal.

Police.

Orders by the Inspector-General of Police, Bengal.

Calcutta.—No. 5079A.—22nd April 1937. —The following postings and promotions are ordered with effect from the 19th April 1937:—

Calcutta.—Maulvi Abdul Jabbar, officiating Inspector, C.I.D., is appointed a probationary Inspector to fill the permanent vacancy caused by the death of Khan Sahib Abu Muhammad Nur-uddin, Inspector, and is posted to the C.I.D.

Hooghly.—Babu Radha Binod Ray, officiating Inspector, Hooghly, is absorbed in the permanent vacancy caused by the retirement of Babu Giriraj Mukharji, Inspector, and is confirmed in the rank of Inspector as he had officiating service for 2 years which counts towards his probationary period. He will remain in Hooghly.

Jessore.—Babu Ramendra Nath Nandi, officiating Inspector, Jessore, is absorbed in the permanent vacancy caused by the retirement of Babu Nirendra Lal Mitra, Inspector, and is confirmed in the rank of Inspector as he had officiating service for 2 years which counts towards his probationary period. He will remain in Jessore.

Bakarganj.—Babu Jatindra Mohan Sen Gupta, officiating Inspector, Bakarganj, is absorbed in the permanent vacancy caused by the reduction of Babu Abinash Chandra Lahiri, Inspector, to the rank of Sub-Inspector and is confirmed in the rank of Inspector as he had officiating service for 2 years which counts towards his probationary period. He will remain in Bakarganj.

Noakhali.—Babu Lalit Chandra Chakrabatti, officiating Inspector, Noakhali, is absorbed in the permanent vacancy caused by the promotion of Rai Sahib Prabhat Chandra Datta, Inspector, to the rank of Deputy Superintendent and is confirmed in the rank of Inspector as he had officiating service for 2 years which counts towards his probationary period. He will remain in Noakhali.

J. C. FARMER,

Inspector-General of Police.

Calcutta Police Notification.

No. 4049.—21st April 1937.—The following draft of rules which in exercise of the powers conferred by clauses (*h*) and (*i*) of section 62 (*1*) of the Calcutta Police Act, 1866 (Bengal Act IV of 1866), and clauses (*h*) and (*i*) of section 39 (*1*) of the Calcutta Suburban Police Act, 1866 (Bengal Act II of 1866), and with the previous sanction of the Governor, the Commissioner of Police, Calcutta, proposes to make for controlling the erection and installation of any structure or framework or any other contrivances, emitting or flashing light, for the purpose of advertisement and decoration in Calcutta and its suburbs, is published for the information of persons likely to be affected thereby.

2. The draft will be taken into consideration on or after the 22nd May 1937, and any objection or suggestion received by the undersigned by that date will be duly considered:—

Draft Rules.

1. No structure, framework or any other contrivances, emitting or flashing light, whether embodying or displaying any advertisement or otherwise, and operated or lighted by electrical or any other means, shall be erected, without the previous sanction in writing of the Commissioner of Police, Calcutta, on or over any street or public place, or against the exterior of any building abutting thereon, for the purposes of illumination.

2. Any Police Officer not below the rank of Sub-Inspector shall have power, at any time, to demand inspection of such sanction in writing and on failure to produce such sanction or on failure to furnish any reasonable explanation for such non-production, to enter into any premises and to stop or disconnect any appliance or device operating or supplying light to such structure, framework or other contrivances when such a course shall be considered necessary for the prevention or removal of any obstruction, danger or damage to residents and passengers in the vicinity.

3. These rules shall not apply to any temporary installations erected on buildings either on the occasion of religious festivals or social functions.

L. H. COLSON,

Commissioner of Police, Calcutta.

JUDICIAL DEPARTMENT.

No. 4525A.

Powers.

Burdwan.—No. 4486A.—20th April 1937.—In exercise of the power conferred by sub-section (*1*) of section 5 of the Bengal Borstal Schools Act, 1928 (Bengal Act I of 1928), the Governor is pleased to invest Babu Surendra Nath Biswas, Deputy Magistrate, Asansol, Burdwan, with the powers necessary for carrying out the purposes of the said section.

Jessore.—No. 4517A.—26th April 1937.—In exercise of the powers conferred by sub-section (*1*) of section 164 of the Code of Criminal Procedure, 1898 (Act V of 1898), the Governor is pleased to empower Babu Sudhansu Bimal Das Gupta, Sub-Deputy Magistrate, Narail, Jessore, who is also a Magistrate of the second class, to record any statement or confession made to him in the course of an investigation under Chapter XIV of the said Code or at any time afterwards before the commencement of the enquiry or trial.

G. P. HOGG,

Secy. to the Govt. of Bengal.

JUDICIAL AND LEGISLATIVE DEPARTMENTS.

Judicial.

Appointments and Transfers.

Bakarganj.—No. 3636J.—15th April 1937.—In exercise of the powers conferred by sections 14 and 15 of the Code of Criminal Procedure, 1898 (Act V of 1898), the Governor is pleased—

(*a*) to confer upon Maulvi Tafazzal Ahmad Chaudhuri the powers of a Magistrate of the second class, in the district of Bakarganj, for a period of three years from the 16th April 1937, in respect to such cases as may be made over to him within the limits of the Pirojpur subdivision of the said district, and

(*b*) to direct that he shall, in addition to sitting singly, sit as a member of the Pirojpur bench in the said district.

Birbhum.—No. 3629J.—20th April 1937.—In exercise of the powers conferred by sections 14 and 15 and the proviso to section 357 of the Code of Criminal Procedure, 1898 (Act V of 1898), the Governor is pleased—

(*a*) to confer upon Babu Amrita Ranjan Mukharji the powers of a Magistrate of the second class, in the district of Birbhum, for a period of three years from the 8th May 1937, in respect to such cases as may be made over to him within the limits of the Sadar subdivision of the said district,

(*b*) to direct that he shall, in addition to sitting singly, sit as a member of the Suri bench in the said district, and

(*c*) to direct him to take down evidence in the English language.

Howrah.—No. 3631J.—20th April 1937.—In exercise of the powers conferred by sections 14 and 15 of the Code of Criminal Procedure, 1898 (Act V of 1898), the Governor is pleased—

(*a*) to confer upon Rai Sedmull Dalmia Bahadur the powers of a Magistrate of the third class, in the district of Howrah, for a period of three years from the 3rd February 1937, and

(*b*) to direct him to sit as a member of the Sadar bench in the said district.

Howrah.—No. 3633J.—20th April 1937.—In exercise of the powers conferred by sections 14 and 15 and the proviso to section 357 of the Code of Criminal Procedure, 1898 (Act V of 1898), the Governor is pleased—

(*a*) to confer upon each of the gentlemen named below the powers of a Magistrate of the third class, in the district of Howrah, for a period of three years from the 9th February 1937,

(*b*) to direct him to sit as a member of the Sadar bench in the said district, and

(*c*) to direct him to take down evidence in the English language—

Babu Dhruba Kumar Pal.

Babu Nirode Chandra Ghosh.

Calcutta.—No. 3644J.—20th April 1937.—Mr. Bhuban Mohan Sen, Barrister-at-Law, is appointed to act as a Presidency Magistrate, Calcutta, during the absence on leave, of Mr. H. K. De, or until further orders.

Bakarganj.—No. 3687J.—24th April 1937.—In exercise of the powers conferred by sections 14 and 15 and the proviso to section 357 of the Code of Criminal Procedure, 1898 (Act V of 1898), the Governor is pleased—

(*a*) to confer upon Babu Dwijendra Nath Dutta the powers of a Magistrate of the third class, in the district of Bakarganj, for a period of three years from the date of this notification, in respect to such cases as may be made over to him within the limits of the Sadar subdivision of the said district,

(*b*) to direct that he shall, in addition to sitting singly, sit as a member of the Sadar bench in the said district, and

(*c*) to direct him to take down evidence in the English language.

Bakarganj.—No. 3698J.—24th April 1937.—In exercise of the powers conferred by sections 14 and 15 and the proviso to section 357 of the Code of Criminal Procedure, 1898 (Act V of 1898), the Governor is pleased—

(*a*) to confer upon Maulvi Nurul Huda the powers of a Magistrate of the second class, in the district of Bakarganj, for a period of three years from the 12th June 1937, in respect to such cases as may be made over to him within the limits of the Patuakhali subdivision of the said district,

(*b*) to direct that he shall, in addition to sitting singly, sit as a member of the Patuakhali bench in the said district, and

(*c*) to direct him to take down evidence in the English language.

Powers.

Faridpur.—No. 3670J.—22nd April 1937.—In exercise of the power conferred by sub-section (*1*) of section 388 of the Indian Succession Act, 1925 (XXXIX of 1925), the Governor is pleased to invest Babu Nishakar Chaudhuri, munsif, under orders of transfer to Bhanga, in the district of Faridpur, with the functions of a District Judge within the local limits of the Bhanga munsifi.

NOTIFICATIONS.

Calcutta.—No. 3586J.—19th April 1937.—In exercise of the power conferred by section 24 of the Parsi Marriage and Divorces Act, 1936 (III of 1936), the Governor is pleased to appoint the following persons to be delegates to aid in the adjudication of cases in the Parsi Chief Matrimonial Court of Calcutta, namely—

Mr. J. D. Lam.

Mr. R. D. Kotwal.

Mr. M. C. Gora.

Mr. K. P. Choksey.

Mr. J. R. K. Modi.

Mr. D. H. Mehta.

Mr. P. K. Madan.

Mr. D. N. Wadia.

Mr. D. M. R. Mehta.

Mr. J. D. Bamji.

Mr. B. J. Madan.

Bankura.—No. 3638J.—20th April 1937.—In exercise of the power conferred by section 65 of the Bengal Village Self-Government Act, 1919 (Bengal Act V of 1919), the Governor is pleased to appoint Babu Bibhuti Bhusan Chakrabatti, a member of the Nabasan union board within the Sonamukhi police-station in the Vishnupur subdivision of the district of Bankura, to be, during his term of office as such member, a member of the union bench within the jurisdiction of the said union board for the purposes of that section, *vice* Babu Sashi Bhusan Ray, deceased.

Bankura.—No. 3639J.—20th April 1937.—In exercise of the power conferred by section 73 of the Bengal Village Self-Government Act, 1919 (Bengal Act V of 1919), the Governor is pleased to appoint Babu Bibhuti Bhusan Chakrabatti, a member of the Nabasan union board within the Sonamukhi police-station in the Vishnupur subdivision of the district of Bankura, to be, during his term of office as such member, a member of the union court within the jurisdiction of the said union board for the purposes of that section, *vice* Babu Sashi Bhusan Ray, deceased.

Mymensingh. — No. 3667J. — 22nd April 1937.—In exercise of the power conferred by section 65 of the Bengal Village Self-Government Act, 1919 (Bengal Act V of 1919), the Governor is pleased to appoint Munshi Miazuddin Sarkar, a member of the Kustia union board within the Kotowali police-station in the Sadar South subdivision of the Mymensingh district, to be, during his term of office as such member, a member of the union bench within the jurisdiction of the said union board for the purposes of that section.

Mymensingh. — No. 3668J. — 22nd April 1937.—In exercise of the power conferred by section 73 of the Bengal Village Self-Government Act, 1919 (Bengal Act V of 1919), the Governor is pleased to appoint Munshi Miazuddin Sarkar, a member of the Kustia union board, within the Kotowali police-station in the Sadar South subdivision of the Mymensingh district, to be, during his term of office as such member, a member of the union court within the jurisdiction of the said union board for the purposes of that section.

N. G. A. ENGLEY,

Secy. to the Govt. of Bengal.

DEPARTMENT OF PUBLIC HEALTH AND LOCAL SELF-GOVERNMENT.

NOTIFICATIONS.

Jessore.—No. 2069M.—19th April 1937.—In exercise of the power conferred by sub-section (*5*) of section 56 of the Bengal Municipal Act, 1932 (Bengal Act XV of 1932), the Governor of Bengal is pleased to extend the term of office of the Commissioners of the Kotchandpur Municipality in the district of Jessore for the period commencing from the date of expiry of the term of four years provided by clause (*a*) of sub-section (*1*) of the said section and ending on the 3rd December 1937, the special circumstances in which it has been thought fit to extend the said term of office being that it is not possible to comply with the election rules and hold a general election of Commissioners during the first six months of the financial year.

24-Parganas. — No. 3001M. — 20th April 1937.—In exercise of the power conferred by section 58 (*2*) of the Bengal Municipal Act, 1932 (Bengal Act XV of 1932), the Governor of Bengal is pleased to appoint Mr. S. Barron to be a Commissioner of the South Suburban Municipality in the district of the 24-Parganas, *vice* Mr. A. J. Brown, deceased.

Calcutta.—No. 3004M.—21st April 1937.—Whereas the Corporation of Calcutta have by a resolution passed at their meeting held on the 31st March 1937 made a recommendation under clause (*xviii*) of section 477 of the Calcutta Municipal Act, 1923 (Bengal Act III of 1923), that the work undertaken by the Bengal Bratachari Society to which the Corporation propose to make a grant out of their funds, is a matter likely to promote public health:

Now, therefore, the Governor of Bengal, in exercise of the power conferred by the said clause, is pleased to declare that the said matter is such as will promote public health within the meaning of clause (*xviii*) of section 477 of the said Act.

CORRIGENDUM.

No. 3055M.—26th April 1937.—In notification No. 963M., dated the 19th February 1937, published at page 411 of the *Calcutta Gazette*, Part I, dated the 4th March 1937, *for* "Mr. W. S. Frazer" *read* "Mr. W. S. Fraser."

G. S. DUTT,

Secy. to the Govt. of Bengal.

EDUCATION DEPARTMENT.

NOTIFICATION.

Mymensingh.—No. 1815Edn.—23rd April 1937.—Babu Kali Mohan Mukherjee, Subdivisional Inspector of Schools, Tangail, is appointed to act in the Bengal Educational Service as District Inspector of Schools, Mymensingh, with effect from the 2nd April 1937, or any subsequent date on which he joined the appointment, during the absence, on leave, of Mr. Abdul Hakim, or until further orders.

Registration.

NOTIFICATIONS.

Mymensingh.—No. 391Regn. — 22nd April 1937.—In exercise of the power conferred by section 3 of the Bengal Muhammadan Marriages and Divorces Registration Act, 1876 (Bengal Act I of 1876), Government are pleased to appoint Maulvi Abdul Mannan Bhuiyan to be a Muhammadan Registrar within unions Nos. I to VIII of police-station Itna, in the district of Mymensingh.

This cancels the orders in notification No. 162Regn., dated the 30th January 1937.

Mymensingh.—No. 392Regn. —22nd April 1937.—In exercise of the power conferred by section 2 of the Kazis' Act, 1880 (Act XII of 1880), Government are pleased to appoint Maulvi Abdul Mannan Bhuiyan to be the Kazi for the celebration of marriages and the performance of other rites and ceremonies within unions Nos. I to VIII of police-station Itna, in the district of Mymensingh.

This cancels the orders in notification No. 163Regn., dated the 30th January 1937.

T. M. Dow,
Secy. to the Govt. of Bengal.

Orders by the Inspector-General of Registration, Bengal.

Pabna-Bogra.—No. 200.—20th April 1937.—Babu Barada Kanta Sen Gupta, Sub-Registrar of Serajganj, in the district of Pabna, is appointed to be Sub-Registrar of Sibganj, in the district of Bogra.

Bogra-Pabna.—No. 201.—20th April 1937.—Babu Nripendra Kumar Ghosh, Sub-Registrar of Sibganj, in the district of Bogra, is appointed to be Sub-Registrar of Serajganj, in the district of Pabna.

Howrah-24-Parganas. — No. 202. — 21st April 1937.—Mr. Birendra Kumar Bose, Sub-Registrar of Bargachia, in the district of Howrah, is posted temporarily to the headquarters station of the district of the 24-Parganas.

Calcutta-Howrah.—No. 203. — 21st April 1937.—Babu Binod Bihari Sen (No. I), officiating Joint Sub-Registrar of Calcutta, on relinquishing charge of his office is appointed to be Sub-Registrar of Bargachia, in the district of Howrah.

Midnapore.—No. 204.—22nd April 1937.—Maulvi Abdul Bari, Sub-Registrar of Khajri, in the district of Midnapore, is allowed leave on average pay for one month, under rule 81 (*b*) (*ii*) of the Fundamental Rules, in extension of the leave granted to him in this department notification No. 31, dated the 22nd January 1937.

Tippera-Noakhali.— No. 205. — 22nd April 1937.—Maulvi A. M. Badiuddin Ahmed, Sub-Registrar attached to the Sadar Registration office at Comilla, Tippera, officiating as 2nd Joint Sub-Registrar of Feni at Daganbhuiyan, in the district of Noakhali, is allowed earned leave on average pay for three days, under rule 9 of the Bengal Services (Revision of Leave) Rules, 1934, with effect from the 12th April 1937.

Bankura.—No. 206. — 24th April 1937.—Maulvi Saiyid Ali Husain, Sub-Registrar of Raipur, in the district of Bankura, is allowed leave on average pay for one month and fifteen days, under rule 81 (*b*) (*ii*) of the Fundamental Rules, with effect from the 5th May 1937, or any subsequent date on which he may be relieved.

Bankura.—No. 207.—24th April 1937.—Babu Indu Bhusan Banarji, Sub-Registrar of Gangajalghati, in the district of Bankura, is appointed to be Sub-Registrar of Raipur in the same district.

Midnapore-Bankura.—No. 208.—24th April 1937.—Maulvi Abdul Bari, Sub-Registrar of Khajri, in the district of Midnapore, on leave, is appointed to be Sub-Registrar of Gangajalghati, in the district of Bankura.

Bogra-Khulna-Hooghly.—No. 209. —24th April 1937.—Babu Bhupendra Nath Gupta, Sub-Registrar of Shariakandi, in the district of Bogra, is appointed to be Sub-Registrar of Paikgacha, in the district of Khulna.

This cancels this department notification No. 193, dated the 15th April 1937, appointing him to be Sub-Registrar of Goghat, in the district of Hooghly.

Khulna-Hooghly.—No. 210. — 24th April 1937.—Babu Sailendra Nath Sil, officiating Sub-Registrar of Paikgacha, in the district of Khulna, is appointed to act, until further orders, as Sub-Registrar of Goghat, in the district of Hooghly.

Dacca.—No. 211.—24th April 1937.—Babu Gauranga Chandra Kabyatirtha, Sub-Registrar of Srinagar, in the district of Dacca, is allowed leave on average pay for one day on the 12th April 1937, under rule 81 (*b*) (*ii*) of the Fundamental Rules.

Calcutta.—No. 212.— 24th April 1937.—Babu Saurendra Nath Sen, Sub-Registrar attached to the office of the Registrar of Assurances, Calcutta, is allowed leave on average pay for three weeks, under rule 81 (*b*) (*ii*) of the Fundamental Rules, in extension of the leave granted to him in this department notification No. 188, dated the 12th April 1937.

Chittagong.—No. 213.—24th April 1937.—Maulvi Mahbubal Alam, Sub-Registrar of Fatikchari, in the district of Chittagong, is allowed leave on average pay for eight months, under rule 81 (*b*) (*ii*) of the Fundamental Rules, with effect from the 5th September 1936.

This cancels this department notification Nos. 528, 7 and 159, dated the 21st September 1936, 5th January 1937, and 27th March 1937, respectively.

Mymensingh.—No. 214.—24th April 1937.—Maulvi Muzharul Huq, No. III, 1st Joint Sub-Registrar of Tangail at Pakulla, in the district of Mymensingh, is allowed leave on average pay for two months, under rule 81 (*b*) (*ii*) of the Fundamental Rules, in extension of the leave granted to him in this department notification No. 78, dated the 18th February 1937.

Bankura.—No. 215. — 24th April 1937.—Babu Rama Prasad Mukherji, Sub-Registrar attached to the Sadar Registration office at Bankura, is allowed leave on average pay for twenty-seven days, under rule 81 (*b*) (*ii*) of the Fundamental Rules, with effect from the 19th April 1937, or any subsequent date on which he avails himself of it.

S. CHATTERJEA,

Inspector-General of Regn., Bengal.

FINANCE DEPARTMENT.

Audit.

CORRIGENDUM.

No. 4510F.—24th April 1937.—The following corrigendum, which has been authorised, is published for general information:—

Fundamental and Subsidiary Rules, 1st edition (Reprint), 1929.

Page 100—F. R. 46A.—Government of India's rule as inserted by correction slip No. 543, dated 4th November 1936.—For the expression "This rule took effect from the 18th October 1934" in this rule, *substitute* the following:—

"This rule took effect from the 13th October 1934."

D. GLADDING,

Secy. to the Govt. of Bengal.

DEPARTMENT OF COMMERCE AND LABOUR.

NOTIFICATIONS.

No. 5090Com. — 19th April 1937. — In exercise of the power conferred by sub-section (*5*) of section 10 of the Factories Act, 1934 (XXV of 1934), the Governor is pleased to appoint all the Subdivisional Officers in the district of Midnapore to be Additional Inspectors of Factories for the purposes of the said Act within their respective territorial jurisdictions.

No. 5371Com.—22nd April 1937.—In exercise of the power conferred by sub-section (*2*) of section 43 of the Factories Act, 1934 (XXV of 1934), the Governor is pleased to make the following amendment in the Bengal Factories Rules, 1935, published under notification No. 10844-Com., dated the 22nd November 1935, viz.:—

Amendment.

After rule 87 of the said rules *add* the following rule, viz.:—

"88. *Tallah Pumping Station Valvemen.*—The provisions of sections 35 and 38 shall not apply to adult male workers employed as 'Valvemen' in the Tallah Water Pumping Station of the Calcutta Corporation at Cossipore, on condition that—

(*a*) on the notice of periods for work required under section 39, the manager shall enter against such group of workers working under the provisions of this rule, the words 'Working under the provisions of rule 88 of the Bengal Factories Rules, 1935'; and

(*b*) no such worker shall be employed for more than twenty-eight hours in any week."

A. HUGHES,

Dy. Secy. to the Govt. of Bengal.

DEPARTMENT OF COMMUNICATIONS AND WORKS (COMMUNICATIONS AND BUILDINGS).

Establishment.

NOTIFICATION.

No. 23.—22nd April 1937.—In continuation of the Local Self-Government Department notification No. 3049L.S.-G., dated the 30th April 1936, Mr. A. J. King, O.B.E., is temporarily appointed as Special Officer, Road Development Projects, for a further period of one month, with effect from the 1st March 1937.

S. K. HALDAR,

Secy. to the Govt. of Bengal.

NOTIFICATION.

No. 21.—15th April 1937.—This office notification No. 11, dated the 8th March 1937, granting leave on average pay for one day, viz., the 25th March 1937, to Babu Bhupendra Nath Sarkar, Assistant Engineer, Chittagong Division, is hereby cancelled.

C. P. M. HARRISON, *Chief Engineer.*

DEPARTMENT OF COMMUNICATIONS AND WORKS.

Irrigation Establishment.

NOTIFICATION.

No. 9/C.I.E. — 21st April 1937. — Babu Krishna Das Datta, Assistant Engineer, is

granted, under rule 81(*b*)(*ii*) of the Fundamental Rules, leave on average pay for one month, with effect from the 24th March 1937, or any subsequent date.

T. A. CURRY,

Chief Engineer, Bengal.

DEPARTMENT OF AGRICULTURE AND INDUSTRIES.

Industries.

NOTIFICATION.

Darjeeling. — No. 2868Ind. — 20th April 1937.—In exercise of the power conferred by clause (*j*) of sub-section (*2*) of section 32 of the Bengal State Aid to Industries Act, 1931 (Bengal Act III of 1931), the Governor is pleased to direct that the rule to provide for the training of apprentices referred to in the second proviso to section 21 of the said Act, published under Government notification No. 7148Ind., dated the 26th November 1936, at page 2694, Part I of the *Calcutta Gazette* of the 3rd December 1936, shall apply in the district of Darjeeling.

Agriculture.

NOTIFICATIONS.

No. 2711Agri. — 17th April 1937. — Mr. P. C. Chaudhuri, Deputy Director of Agriculture, Eastern Circle, is appointed to act as Assistant Director of Agriculture, Bengal, *vice* Mr. Carbery, appointed as Director of Agriculture, Bengal, or until further orders.

No. 2714Agri. —17th April 1937. — Babu Jagadish Chandra Bose, Head Assistant of the office of the Director of Agriculture, Bengal, is appointed to act as Personal Assistant to the Director of Agriculture, Bengal, *vice* Khan Sahib Maulvi S. Abdullah, appointed as Deputy Director of Agriculture, Bengal, Eastern Circle, or until further orders.

No. 1T.A I.Agri.—19th April 1937.— Mr. M. Carbery, officiating Director of Agriculture, Bengal, is confirmed in that appointment, with effect from the 16th January 1937.

No. 4T.A.I.Agri.—19th April 1937.— Khan Sahib Maulvi S. Abdullah, Personal Assistant to the Director of Agriculture, Bengal, is appointed to act as Deputy Director of Agriculture, Eastern Circle, in the Bengal Higher Agricultural Service, *vice* Mr. P. C. Chaudhuri, Deputy Director of Agriculture, Eastern Circle, appointed to act as Assistant Director of Agriculture, Bengal, or until further orders.

H. S. E. STEVENS,

Secy. to the Govt. of Bengal.

RESOLUTION—No. 22T.A.I.

Darjeeling, the 21st April 1937.

His Excellency the Governor of Bengal is pleased to constitute the Governing Body of the Agricultural Institute at Daulatpur with the following members:—

(1) District Magistrate, Khulna, Chairman (*ex-officio*).

(2) Director of Agriculture, Bengal (*ex-officio*).

(3) Deputy Director of Agriculture, Western Circle (*ex-officio*).

(4) Rai J. N. Ghosh Bahadur, B.L., representative, District Board, Khulna.

(5) Professor Apurba Chandra Nag, ..., representative of the Daulatpur College Trust.

(6) Babu Sarat Chandra Majumdar, M.A., representative of the Daulatpur College Council.

(7) and (8) Mr. S. K. Sen, B.A. (Cantab.), Bar.-at-Law, and Mr. S. C. Ghosh, M.A., representatives of the Daulatpur College Reorganisation Committee.

(9) Khan Sahib Maulvi Shamsur Rahman, B.L.

(10) Maulvi Abul Quasem, M.A., B.L.

(11) Principal of the Daulatpur Agricultural Institute (*Ex-officio Secretary*).

The members will hold office for a period of three years.

Order—Ordered that the resolution be published in the *Calcutta Gazette* and that copies be forwarded to the members of the Governing Body of the Agricultural Institute at Daulatpur and the Commissioner of the Presidency Division, for information.

H. S. E. STEVENS,

Secy. to the Govt. of Bengal.

CO-OPERATIVE CREDIT AND RURAL INDEBTEDNESS DEPARTMENT.

Debt Conciliation.

NOTIFICATIONS.

Mymensingh.—No. 1163D.C.—24th April 1937.—In exercise of the power conferred by sub-section (*1*) of section 3 of the Bengal Agricultural Debtors Act, 1935 (Bengal Act VII of 1936), the Governor is pleased to establish the undermentioned Special Debt Settlement Boards in the Netrakona subdivision of the Mymensingh district for the local areas respectively shown against each:—

Name of Special Debt Settlement Board.	Names of thanas comprising the local area.
Kendua	... Kendua, Madan and Khaliajuri.
Netrakona	... Netrakona, Purbadhalla and Durgapur.
Barhatta	... Barhatta, Atpara, Mohanganj and Kalmakanda.

2. In exercise of the power conferred by section 7 of the said Act the Governor is pleased to empower the said Boards to exercise powers under sub-section (*2*) of section 9, sub-section (*2*) of section 13, clause (*b*) of sub-section (*1*) of section 19, and section 21 of the said Act.

Mymensingh.—No. 1164D.C.—24th April 1937.—In exercise of the power conferred by sub-section (*1*) of section 3 of the Bengal Agricultural Debtors Act, 1935 (Bengal Act VII of 1936), the Governor is pleased to establish the undermentioned Special Debt Settlement Boards in the Tangail subdivision of the Mymensingh district for the local areas respectively shown against each:—

Name of Special Debt Settlement Board.	Names of thanas comprising the local area.
Tangail	... Tangail, Basail and Kalihati.
Gopalpur	... Madhupur, Gopalpur and Ghatail.

2. In exercise of the power conferred by section 7 of the said Act the Governor is pleased to empower the said Boards to exercise powers under sub-section (*2*) of section 9, sub-section (*2*) of section 13, clause (*b*) of sub-section (*1*) of section 19, and section 21 of the said Act.

No. 1165D.C.—24th April 1937.—In exercise of the power conferred by section 55 of the Bengal Agricultural Debtors Act, 1935 (Bengal Act VII of 1936), the Governor is pleased to make the following amendment to rule 102 of the Bengal Agricultural Debtors Rules, 1936, published under the Revenue Department notification No. 9187L.R., dated the 26th June 1936:—

Amendment.

Insert the words "without the permission of the Board" after the words "to appear before the Board" in rule 102 of the said rules.

Co-operative Societies.

NOTIFICATIONS.

No. 2419Co-op.—9th April 1937.—Mr. Aziz Ahmed, I.C.S., is re-appointed to the temporary post of Deputy Registrar of Co-operative Societies, Bengal, in addition to his duties as Director, Debt Conciliation, Dacca and Chittagong Divisions.

No. 2423Co-op.—9th April 1937.—In exercise of the power conferred by section 3 of the Co-operative Societies Act 1912 (II of 1912), the Government of Bengal are pleased to confer on Mr. Aziz Ahmed, I.C.S., re-appointed to the temporary post of Deputy Registrar of Co-operative Societies, Bengal, in addition to his duties as Director, Debt Conciliation, all the powers of a Registrar under the said Act

E. W. HOLLAND,

Jt. Secy. to the Govt. of Bengal.

Orders by the Registrar of Co-operative Societies, Bengal.

No. 4760.—16th April 1937.—In modification of this office notification No. 52-L., dated the 13th September 1930, so far it relates to the appointment of Babu Narayan Chandra Das Gupta, Auditor of Co-operative Societies, Shahzadpur, as liquidator of the Shahzadpur Central Co-operative Sale and Supply Society, Limited (registered No. 308 of 1926), in the district of Pabna, I hereby appoint the Auditor of Co-operative Societies, Shahzadpur, instead as liquidator of the said society.

No. 4833.—20th April 1937.—In modification of this office notifications as noted below so far they relate to the appointment of the Inspector of Co-operative Societies, Barisal, as liquidator of the societies in the district of Barisal as noted against each, I hereby appoint the Secretary, Barisal Central Co-operative Bank, Limited, as liquidator of the said societies, instead:—

Notification No. 91-L., dated 29th January 1929, Barakota Gramya Mahajani Sabha (registered No. 371 of 1913).

Notification No. 136-L., dated 4th February 1933, Ashighar Samabaya Samity (registered No. 14 of 1926).

Notification No. 143-L., dated 18th February 1933, Bisore Samabaya Samity (registered No. 120 of 1926).

Notification No 167-L., dated 17th March 1933, Char Paikshya Samabaya Samity (registered No. 5-D of 1924).

Notification No. 149-L., dated 25th February 1933, Char Khagkatar Paschinar Dakhinerchar Joutha Bank (registered No. 397 of 1924).

Notification No. 182-L., dated 3rd May 1933, Harinathpur Samabaya Samity (registered No. 201 of 1928).

Notification No. 137-L., dated 4th February 1933, Uttar Sankarpasha Joutha Bank (registered No. 235-D of 1921).

Notification No. 36-L., dated 14th September 1933, Hashanpur Joutha Bank (registered No. 624 of 1917).

Notification No. 51-L., dated 23rd January 1935, Kathalia Samabaya Samity (registered No. 349 of 1926).

Notification No. 71-L., dated 18th April 1935, Dudhal Samabaya Samity (registered No. 88 of 1926).

Notification No. 96-L., dated 12th June 1935, Dighirjan Samabaya Samity (registered No. 92 of 1925).

Notification No. 102-L., dated 12th June 1935, Idilkati Samabaya Samity (registered No. 10-D of 1924).

Notification No. 8-L., dated 28th August 1935, Pilkhana Samabaya Samity (registered No. 195 of 1926).

Notification No. 26-L., dated 23rd September 1935, Uttar Bowkati Samabaya Samity (registered No. 278 of 1929).

No. 4889.—21st April 1937.—In modification of this office notifications noted below so far they relate to the appointment of the Inspector of Co-operative Societies, Jamalpur, as liquidator in respect of Co-operative Societies noted against each in the district of Mymensingh, I hereby appoint the Departmental Officer in charge of Co-operative Societies, Jamalpur Circle, instead, as liquidator of the said societies—

Notification No. 512, dated 6th January 1923, Jamalpur Co-operative Stores, Ltd. (registered No. 46-D of 1918).

Notification No. 13-L., dated 8th August 1927, Sonkanda Kotrakanda Co-operative Bank (registered No. 363 of 1917).

Notification No. 47-L., dated 14th September 1928, Kurarpara Rinprodayini Samity (registered No. 68-D of 1919).

Notification No. 92-L., dated 29th January 1929, Haripur Gramya Dharma Bhander (registered No. 188 of 1914).

Notification No. 93-L., dated 29th January 1929, Kamalarbati Gramya Mahajani Sabha (registered No. 153 of 1914).

Notification No. 25-L., dated 13th August 1929, Sonakanda Gramya Dharma Bhander (registered No. 88-D of 1909-10).

Notification No. 43-L., dated 8th September 1930, Sarisabari Central Co-operative Sale and Supply Society, Ltd. (registered No. 492-D of 1926).

No. 5136.—23rd April 1937. In modification of this office notification No. 58-L., dated the 24th January 1936, so far it relates to the appointment of a liquidator of the Dakhin Phultala Co-operative Society [registered No. 13 (Hooghly) of 1928], in the district of Hooghly, I hereby appoint the Departmental Officer in charge of Co-operative Societies, Hooghly Sadar Circle, instead, to be the liquidator of the said society.

A. M. ARSHADALI,

Regr., Co-operative Societies, Bengal.

REVENUE DEPARTMENT.

Land Revenue.

ORDER.

Murshidabad.—No. 9503L.R.—22nd April 1937.—The Governor is pleased (1) to appoint Rai Kalipada Moitra Bahadur, Deputy Collector (retired) and Manager, Nawab Bahadur's Estate, Murshidabad, to sign and verify the plaint or written statement in any suit by or against the Secretary of State for India in Council relating to any of the immovable properties mentioned in the schedules annexed to the Murshidabad Act, 1891 (XV of 1891), or the rents, issues and profits thereof, in accordance with rule 1 of order XXVII of the Code of Civil Procedure, 1908 (Act V of 1908); and

(2) to authorise the said officer to act for the Government in respect of any judicial proceedings relating to any of the aforesaid immovable properties or the rents, profits and issues thereof, in accordance with rule 2 of the said order of the said Code.

Ordered that a copy of this order be published in the *Calcutta Gazette* for general information.

NOTIFICATIONS.

Dacca.—No. 9345L.R.—20th April 1937.—Babu Surendra Nath Roy, Deputy Magistrate and Deputy Collector, on probation, is appointed to be Khas Mahal Officer, Dacca, with effect from the date on which he takes over charge of khas mahal work in that district.

This cancels the orders issued under this department notification No. 14486L.R., dated the 12th October 1936.

Chittagong.—No. 9477L.R. — 22nd April 1937.—In exercise of the powers conferred by section 3 of the Bengal Land Revenue Settlement Regulation, 1825 (IX of 1825), read with section 20 of the Bengal Land Revenue Settlement Regulation, 1822 (VII of 1822), the Governor is pleased to vest Babu Hira Lal Karmakar, Settlement Kanungo, who has, by notification No. 5960-C.P., dated the 15th April 1937, been vested by the Board of Revenue with the powers of a Collector in the estate of Rai Upendra Lal Ray Bahadur and others, in the district of Chittagong, for the purpose of the work of maintenance of the record-of-rights of that estate, with powers under section 19 of the said Bengal Land Revenue Settlement Regulation, 1822, within the local limits of that estate, to require and compel persons mentioned in the section to attend and produce accounts and other papers and to examine such persons under that section for the purpose of the said work of the maintenance of the record-of-rights.

Noakhali.—No. 9479L.R.—22nd April 1937.—Notification No. 2646L.R., dated the 22nd February 1928, under section 3 of the Bengal Survey Act, 1875 (Act V of 1875), published at page 423, Part I, of the *Calcutta Gazette* of the 1st March 1928, is hereby cancelled so far as it relates to the survey of the lands comprised in the following Government and temporarily-settled private estates:—

Serial No.	Name of mahal.	Estate No.
	Government estate.	
5	Ramchandra Brahmachari	1640
	Temporarily-settled private estates.	
2	Diara Mahal Afzal Fakira	1569
10	Diara Estate East and West Char Lengta ...	1957
11	New Diara Estate East and West Char Lengta ...	1958
14	Thak Nij Kunjra ...	1785

Noakhali.—No. 9480L.R.—22nd April 1937.—Notification No. 2647L.R., dated the 22nd February 1928, under section 101 (2) (d) of the Bengal Tenancy Act, 1885 (Act VIII of 1885), published at page 424 of the *Calcutta Gazette* of the 1st March 1928, is hereby cancelled so far as it relates to the survey and preparation of records-of-rights in respect of lands which are comprised in the following Government estate:—

Serial No.	Name of estate.	Estate No.
5	Ramchandra Brahmachari	1640

Noakhali.—No. 9481L.R.—22nd April 1937.—Notification No. 2648L.R., dated the 22nd February 1928, under section 101 (2) (d) of the Bengal Tenancy Act, 1885 (Act VIII of 1885), published at pages 424-425 of the *Calcutta Gazette* of the 1st March 1928, is hereby cancelled so far as it relates to the survey and preparation of record-of-rights in respect of lands which are comprised in the following temporarily-settled private estates:—

Serial No.	Name of estate.	Estate No.
	Temporarily-settled private estates.	
2	Diara Mahal Afzal Fakira	1569
10	Diara Estate East and West Char Lengta ...	1957
11	New Diara Estate East and West Char Lengta ...	1958
14	Thak Nij Kunjra ...	1785

Noakhali.—No. 9482L.R.—22nd April 1937.—Notification No. 10318L.R., dated the 25th August 1930, under section 3 of the Bengal Survey Act, 1875 (Act V of 1875), published at page 1369, Part I, of the *Calcutta Gazette* of the 28th August 1930, is hereby cancelled so far as it relates to the survey of the lands comprised in the following Government estate:—

Serial No.	Name of mahal.	Estate No.
	Government estate.	
	Char Hinguly ...	1780

Noakhali.—No. 9483L.R.—22nd April 1937.—Notification No. 10319L.R., dated the 25th August 1930, under section 101 (2) (*d*) of the Bengal Tenancy Act, 1885 (Act VIII of 1885), published at page 1369 of the *Calcutta Gazette* of the 28th August 1930, is hereby cancelled so far as it relates to the survey and preparation of record-of-rights in respect of lands which are comprised in the following Government estate:—

Serial No.	Name of estate.	Estate No.
14	Char Hinguly ...	1780

Noakhali.—No. 9484L.R.—22nd April 1937.—Notification No. 317L.R., dated the 12th January 1933, under section 3 of the Bengal Survey Act, 1875 (Act V of 1875), published at page 55, Part I, of the *Calcutta Gazette* of the 19th January 1933, is hereby cancelled so far as it relates to the survey of the lands comprised in the following Government estate:—

Name of mahal.	Estate No.
Char Jatra ...	1567

Noakhali.—No. 9485L.R.—22nd April 1937.—Notification No. 318L.R., dated the 12th January 1933, under section 101 (2) (*d*) of the Bengal Tenancy Act, 1885 (Act VIII of 1885), published at page 55, Part I, of the *Calcutta Gazette* of the 19th March 1933, is hereby cancelled so far as it relates to the survey and preparation of record-of-rights in respect of lands which are comprised in the following Government estates:—

Name of estate.	Estate No.
Char Jatra ...	1567

Nadia-Murshidabad.—No. 9643L.R. — 23rd April 1937.—Under the provisions of section 3(*14*) of the Bengal Tenancy Act, 1885 (Act VIII of 1885), Maulvi Saiyid Fazlur Rahman, Settlement Kanungo, is authorised to discharge, in the districts of Nadia and Murshidabad, the functions of a Revenue Officer, under Chapter X of that Act, so far as they relate to surveys and the preparation of record-of-rights.

Nadia-Murshidabad.—No. 9644L.R. — 23rd April 1937.—In exercise of the powers conferred by section 3 of the Bengal Land Revenue Settlement Regulation, 1825 (IX of 1825), read with section 20 of the Bengal Land Revenue Settlement Regulation, 1822 (VII of 1822), the Governor is pleased to vest Maulvi Saiyid Fazlur Rahman, Settlement Kanungo, who has, by notification No. 6281-C.P., dated the 20th April 1937, been vested by the Board of Revenue with the powers of a Collector in the estate of Babu Amiya Pal Choudhury, in the district of Nadia and Murshidabad, for the purpose of the work of maintenance of the record-of-rights of that estate, with powers under section 19 of the said Bengal Land Revenue Settlement Regulation, 1822, within the local limits of that estate, to require and compel persons mentioned in the section to attend and produce accounts and other papers and to examine such persons under that section for the purpose of the said work of the maintenance of the record-of-rights.

Dacca.—No. 9646L.R.—23rd April 1937.—Babu Upendra Kumar Mitra, Sub-Deputy Collector and Khas Mahal Officer, Dacca, on leave, is allowed leave on average pay for the period up to the 31st March 1937, inclusive, on proper medical certificate, under the proviso to rule 81(*b*)(*ii*) of the Fundamental Rules, in extension of the leave granted to him in this department notification No. 16967-L.R., dated the 9th December 1936.

This cancels the orders issued under this department notification No. 4401L.R., dated the 26th February 1937.

24-Parganas-Khulna.—No. 9652L.R.—23rd April 1937.—Under the provisions of section 3(*14*) of the Bengal Tenancy Act, 1885 (VIII of 1885), Babu Manindra Mohan Das, Settlement Kanungo, is authorised to discharge, in the districts of 24-Parganas and Khulna, the functions of a Revenue Officer, under Chapter X of that Act, so far as they relate to surveys and the preparation of record-of-rights.

No. 42T.R.—23rd April 1937.—In exercise of the power conferred by sub-clause (*b*) of clause (*9*) of section 2 of the Indian Stamp Act, 1899 (II of 1899), and in modification of notification No. 2584S.R., dated the 12th October 1921, the Governor is pleased to appoint all Deputy Collectors to be Collectors within the meaning of the said clause (*9*) for the purpose of performing the functions of the Collector specified in sections 16, 18, 32, 39, 42 (*1*), 48, 49, 53, 54 and 73 of the said Act.

No. 53T.R.—23rd April 1937. — In pursuance of the provisions of sub-section (*2*) of section 158A of the Bengal Tenancy Act, 1885 (VIII of 1885), the Governor is pleased to make the following modifications in the terms and conditions for the grant of applications under the said section published under notification No. 10954L.R, dated the 31st August 1931, at pages 1057-1058, Part I of *Calcutta Gazette* of the 3rd September 1931, namely:—

Renumber paragraph 6 as 6 (*b*) and insert the following as paragraph 6 (*a*).

"The Director of Land Records and Surveys, shall prepare a scheme and estimate and submit the same to the landlord for his acceptance through the Collector. Unless the landlord accepts the terms and conditions and estimate of the scheme for maintenance within two months of receipt of such scheme and estimate, the case will be struck off".

No. 9714L.R.—26th April 1937.—The price list (retail) of staple food-crops in the local areas of Bengal under section 39 (5) of the Bengal Tenancy Act, 1885 (VIII of 1885), for the year 1936 is published for general information

O. M. MARTIN,
Secy. to the Govt. of Bengal.

Price list of staple food-crops for the year 1936.

Burdwan Division.

District.	Local areas.	Marts at which prices were taken.	Staple food-crop or crops.	Quantities per rupee in seers of 80 tolas Company's weight.
1	2	3	4	5
				S. C.
Burdwan ..	Sadar subdivision	Burdwan Nutanganj	Rice ..	9 8
	Asansol ditto ..	Raniganj ..	Do. ..	9 5
	Katwa ditto ..	Katwa ..	Do. ..	10 1
	Kalna ditto ..	Kalna ..	Do. ..	9 0
Birbhum ..	Sadar ditto ..	Suri ..	Do. ..	10 10
	Rampurhat ditto ..	Rampurhat ..	Do. ..	10 11
Bankura ..	Sadar ditto ..	Bankura ..	Do ..	10 8
	Vishnupur ditto ..	Vishnupur ..	Do. ..	10 7
Midnapore ..	Sadar ditto ..	Colonelgola and School Bazar, town Midnapore.	Do. ..	11 10
	Jhargram ditto ..	Jhargram ..	Do. ..	10 4
	Ghatal ditto ..	Ghatal Municipal Market	Do. ..	11 10
	Tamluk ditto ..	Tamluk Bazar ..	Do. ..	9 3
	Contai ditto ..	Kantanala Bazar, town Contai.	Do. ..	10 4
Hooghly ..	Sadar ditto ..	Hooghly ..	Do. ..	10 14
	Serampore . ditto ..	Serampore ..	Do. ..	9 14
	Arambagh ditto ..	Arambagh ..	Do. ..	10 3
Howrah ..	Sadar ditto ..	Ramkristopur ..	Do. ..	9 11
	Uluberia ditto ..	Uluberia ..	Do. ..	9 14

Presidency Division.

				S. C.
24-Parganas ..	Sadar subdivision ..	Chetla Hat ..	Rice ..	11 6
	Barasat and Barrackpore subdivisions.	Barasat ..	Do. ..	10 5
	Diamond Harbour subdivision.	Magrahat ..	Do. ..	10 5
	Basirhat subdivision ..	Baduria ..	Do ..	10 3
Nadia ..	Sadar subdivision	Goari ..	Do. ..	8 15
	Ranaghat ditto ..	Ranaghat ..	Do. ..	9 12
	Meherpur ditto ..	Meherpur, Kalibazar ..	Do. ..	10 12
	Chuadanga ditto ..	Chuadanga ..	Do. ..	10 15
	Kushtia ditto ..	Bahadurkhali ..	Do. ..	10 8
Murshidabad ..	Sadar ditto ..	Berhampur, Khagra ..	Do. ..	10 5
	Lalbagh ditto ..	Jiaganj ..	Do. ..	10 11
	Kandi ditto ..	Kandi ..	Do. ..	10 15
	Jangipur ditto ..	Raghunathganj ..	Do. ..	10 14
Jessore ..	Sadar ditto ..	Jessore ..	Do. ..	12 7
	Narail ditto ..	Rupganj ..	Do. ..	11 11
	Magura ditto ..	Magura ..	Do ..	12 7
	Jhenida ditto ..	Jhenida ..	Do ..	12 7
	Bongaon ditto ..	Bongaon ..	Do. ..	9 14
Khulna ..	Sadar ditto ..	Khulna Bazar (*alias* Saheberhat).	Do. ..	10 8
	Satkhira ditto ..	Satkhira Bazar (*alias* Pranshire).	Do. ..	11 4
	Bagerhat ditto ..	Bagerhat ..	Do. ..	9 2

Dacca Division.

District.	Local areas.	Marts at which prices were taken	Staple food-crop or crops	Quantities per rupee in seers of 80 tolas Company's weight
1	2	3	4	5
				S. C.
Dacca ..	Narayanganj subdivision	Narayanganj Bazar ..	Rice ..	12 2
	Sadar ditto ..	Dacca town, Imamganj Bazar.	Do. ..	10 5
	Manikganj ditto ..	Dasora Bazar ..	Do. ..	10 11
	Munshiganj ditto ..	Mirkadim ..	Do. ..	10 7
Mymensingh ..	Jamalpur ditto ..	Raniganj ..	Do. ..	11 9
	Tangail ditto ..	Kagmari ..	Do. ..	10 9
	Netrakona ditto ..	Netrakona ..	Do. ..	12 0
	Sadar ditto ..	Mechuabazar ..	Do. ..	10 14
	Kishorganj ditto ..	Kishorganj ..	Do. ..	10 9
Faridpur ..	Sadar ditto ..	Faridpur ..	Do. ..	10 15
	Madaripur ditto ..	Madaripur ..	Do. ..	11 10
	Goalundo ditto ..	Rajbari ..	Do. ..	11 7
	Gopalganj ditto ..	Gopalganj ..	Do. ..	11 9
Bakarganj ..	Patuakhali ditto ..	Patuakhali ..	Do. ..	10 12
	Pirojpur ditto ..	Rajganj ..	Do. ..	10 4
	Sadar ditto ..	Barisal ..	Do. ..	10 6
	Dakhin Shahbazpur ditto ..	Bhola Hat ..	Do. ..	10 4

Chittagong Division.

				S. C.
Tippera ..	Brahmanbaria subdivision	Brahmanbaria ..	Rice ..	11 12
	Sadar ditto ..	Rajganja Bazar, Comilla	Do. ..	10 7
	Chandpur ditto ..	Chandpur Old Bazar ..	Do. ..	11 1
Noakhali ..	Sadar ditto ..	Bara Bazar ..	Do. ..	11 6
	Feni ditto ..	Feni Bazar ..	Do. ..	12 12
Chittagong ..	Sadar ditto ..	Buxir Hat ..	Do. ..	10 13
	Cox's Bazar ditto ..	Cox's Bazar ..	Do. ..	12 1

Rajshahi Division.

				S. C.
Rajshahi ..	Sadar subdivision	Saheb Bazar ..	Rice ..	10 1
	Naogaon ditto ..	Naogaon ..	Do. ..	10 14
	Nator ditto ..	Nator ..	Do. ..	11 10
Dinajpur ..	Sadar ditto ..	Railway Bazar Hat ..	Do. ..	10 12
	Thakurgaon ditto ..	Lahirihat ..	Do. ..	12 0
	Balurghat ditto ..	Balurghat ..	Do. ..	11 12
Jalpaiguri ..	Alipur Duars ditto ..	Alipur Duars ..	Do. ..	10 9
	Sadar ditto ..	Dinbazar ..	Do. ..	11 14
Rangpur ..	Sadar ditto ..	Nawabganj, Chalia-amad, Rangpur.	Do. ..	10 14
	Nilphamari ditto ..	Sagarmacha ..	Do. ..	12 0
	Kurigram ditto ..	Kurigram ..	Do. ..	10 14
	Gaibandha ditto ..	Gaibandha Bazar ..	Do. ..	9 11
Bogra .	District of Bogra ..	Kalitala Hat ..	Do. ..	11 0
Pabna ..	Sadar subdivision	Pabna Bazar ..	Do. ..	10 5
	Sirajganj ditto ..	Fariapati at Serajganj ..	Do. ..	11 6
Malda ..	District of Malda ..	Balia Nawabganj ..	Do. ..	11 12

Land Acquisition.

NOTIFICATIONS.

Jalpaiguri.—No. 9475L.A.—22nd April 1937.—Babu Byomkesh Sen Gupta, Deputy Magistrate and Deputy Collector, Jalpaiguri, is vested with the powers of a Collector under the Land Acquisition Act, I of 1894, in that district.

Howrah.—No. 9490L.A.—22nd April 1937.—Babu Nabagauranga Basak, Deputy Magistrate and Deputy Collector, Howrah, is vested with the powers of a Collector under the Land Acquisition Act, I of 1894, in that district.

Tippera.—No. 9492L.A.—22nd April 1937.—Whereas it appears to the Governor that land is likely to be required to be taken by Government at the expense of the Tippera district board for a public purpose, viz., for the diversion of Puranbazar Baghadi Road in the mauzas Bara Raghunathpur, jurisdiction list No. 97, North Balia, jurisdiction list No. 115, and Baghadi, jurisdiction list No. 111, thana Chandpur, parganas Patikara, Patikara-Gunanandi and Kardi-Mahabbatpur, respectively, district Tippera, it is hereby notified that for the above purpose, a piece of land comprising parts of cadastral plots Nos. 595, 591, 592, 593, 547, 546, 545, 548, 549, 550, 555, 503, 556, 557, 502, 558, 501, 500, 499, 560, 561, 703, 702, 704, 705, 467, 724, 2181, 723, 722, 721, 720, 719, 718, 793, 794, 792, 791, 788, 787, 757, 758, 760, 761, 762, 774, 773, 772, 906, 911, 912, 2276, 938, 939, 2277, 951, 2223, 948 and 958 in mauza Bara Raghunathpur, parts of cadastral survey plots Nos. 85, 88 and 89 in mauza North Balia and parts of cadastral survey plots Nos. 474, 470, 471, 472 and 473 in mauza Baghadi, and measuring, more or less, 9·3 acres, is likely to be required within the aforesaid villages of Bara Raghunathpur, North Balia and Baghadi, respectively.

This notification is made, under the provisions of section 4 of Act I of 1894, to all whom it may concern.

A plan of the land may be inspected in the office of the Subdivisional Officer, Chandpur.

In exercise of the powers conferred by the aforesaid section, the Governor is pleased to authorise the officers for the time being engaged in the undertaking, with their servants and workmen, to enter upon and survey the land and do all other acts required or permitted by that section.

Any person interested in the above land, who has any objection to the acquisition thereof, may, within thirty days after the date on which public notice of the substance of this notification is given in the locality, file an objection in writing before the Subdivisional Officer, Chandpur.

Burdwan.—No. 9495L.A.—22nd April 1937.—Whereas it appears to the Governor that land is likely to be required to be taken by Government at the public expense for a public purpose, viz., for the 14th mile of the Burdwan-Arambag road, in the villages of Bujrukdighi and Uchalan, jurisdiction list Nos. 62 and 131, respectively, in thana Rayna, parganas Khandagosh and Samarshahi, respectively, district Burdwan, it is hereby notified that for the above purpose a piece of land comprising cadastral survey plots Nos. 2820, 2963-2965 and parts of cadastral survey plots Nos. 975, 976, 980, 981, 992, 993, 994, 996, 998, 2808, 2811, 2815, 2816, 2819, 2821, 2830, 2943, 2959-2962, 2966, 2992, 2993 and 3027 in mauza Bujrukdighi, cadastral survey plots No. 385, and parts of cadastral survey plots Nos. 380, 382-384, 386-393, 424, 426, 427, 431, 433, 435, 436, 445-447 and 449 in mauza Uchalan, and measuring, more or less 15·8 acres, is likely to be required within the aforesaid villages of Bujrukdighi and Uchalan.

This notification is made, under the provisions of section 4 of Act I of 1894, to all whom it may concern.

A plan of the land may be inspected in the office of the Special Land Acquisition Officer, Burdwan, as well as in that of the Executive Engineer, Burdwan Division.

In exercise of the powers conferred by the aforesaid section, the Governor is pleased to authorise the officers for the time being engaged in the undertaking, with their servants and workmen, to enter upon and survey the land and do all other acts required or permitted by that section.

Any person interested in the above land, who has any objection to the acquisition thereof, may, within thirty days after the date on which public notice of the substance of this notification is given in the locality, file an objection in writing before the Collector of Burdwan.

Bakarganj.—No. 9498L.A.—22nd April 1937.—Babu Sudhansu Ranjan De, Deputy Magistrate and Deputy Collector, Bakarganj, is vested with the powers of a Collector under the Land Acquisition Act, I of 1894, in that district.

Noakhali.—No. 9500L.A.—22nd April 1937.—The Governor is pleased to cancel the notification No. 11712L.A., dated the 17th August 1936, under section 4 of the Land Acquisition Act, I of 1894, published at page 1979, Part I of the *Calcutta Gazette* of the 20th idem, in respect of the proposed acquisition of 1·89 acres of land required by the Noakhali district board, for the construction of a feeder road from Maizdee New town to Harinarayanpur Railway Station, in the villages of North Rajarampur and Harinarayanpur, jurisdiction list Nos. 108 and 113, respectively, thana Sudharam, zilla Noakhali.

Bogra.—No. 9625L.A.—23rd April 1937.—Whereas it appears to the Governor that land is likely to be required to be taken by Government at the expense of the Gossainbari union board for a public purpose, viz., for the Gossainbari union board office, in the village of Gossainbari, jurisdiction list No. 17, thana Dhunot, pargana Dhaturia Tappa Chapila, zilla Bogra, it is hereby notified that for the above purpose a piece of land comprising parts of cadastral plots Nos. 2918 (*a*) and 2918 (*b*) and measuring, more or less, 0·52 of an acre, is likely to be required within the aforesaid village of Gossainbari.

This notification is made, under the provisions of section 4 of Act I of 1894, to all whom it may concern.

A plan of the land may be inspected in the office of the Collector of Bogra.

In exercise of the powers conferred by the aforesaid section, the Governor is pleased to authorise the officers for the time being engaged in the undertaking, with their servants and workmen, to enter upon and survey the land and do all other acts required or permitted by that section.

Any person interested in the above land, who has any objection to the acquisition thereof, may, within thirty days after the date on which public notice of the substance of this notification is given in the locality, file an objection in writing before the Collector of Bogra.

Dacca.—No. 9631L.A.—23rd April 1937.—The Governor is pleased to cancel the notification No. 1203L.A., dated the 27th January 1936, under section 4 of the Land Acquisition Act, I of 1894, published at page 316, Part I of the *Calcutta Gazette* of the 6th February 1936, in respect of the proposed acquisition of 2·319 acres of land required by the district board of Dacca for the construction of a road from Charsindur Ferry Ghat to Deshbandhu Sugar Mill in the villages of Kauadi and Pakraganj, thana Kapasia, parganas Tappa Maheswardi and Tappa Sarifpur, district Dacca.

Dacca.—No. 9634L.A.—23rd April 1937.—Whereas it appears to the Governor that land is likely to be required to be taken by Government at the expense of the Dacca district board for a public purpose, viz., for the construction of a road from Charsindur Ferry Ghat to Deshbandhu Sugar Mill, in the villages of Kauadi and Pakraganj, jurisdiction list Nos. 375 and 370, respectively, police-station Kaliganj, parganas Tappa Maheswardi and Tappa Sarifpur, district Dacca, it is hereby notified that for the above purpose a piece of land comprising parts of cadastral plots Nos. 164, 157, 163, 161, 158, 434, 501, 499, 500, 503, 498, 497, 496, 469, 495, 492, 490, 470, 473, 459, 458, 80, 70, 71, 64, 65, 66, 68, 67, 39, 38, 9, 7, 8, 531, 6, 3, 5 and 4 of mauza Kauadi and parts of cadastral plots Nos. 253, 240, 239, 238, 244, 245, 237, 236, 228, 226, 225, 223, 224, 220, 216, 217, 215 and 214 of mauza Pakraganj and measuring, more or less, 2·583 acres, is likely to be required within the aforesaid villages of Kauadi and Pakraganj.

This notification is made, under the provisions of section 4 of Act I of 1894, to all whom it may concern.

A plan of the land may be inspected in the office of the Collector of Dacca.

In exercise of the powers conferred by the aforesaid section, the Governor is pleased to authorise the officers for the time being engaged in the undertaking, with their servants and workmen, to enter upon and survey the land and do all other acts required or permitted by that section.

Any person interested in the above land, who has any objection to the acquisition thereof, may, within thirty days after the date on which public notice of the substance of this notification is given in the locality, file an objection in writing before the Collector of Dacca.

Chittagong.—No. 9698L.A.—26th April 1937.—The Governor is pleased to cancel so much of the notification No. 12583L.A., dated the 31st August, 1936, under section 4 of Land Acquisition Act, I of 1894, published at page 2081, Part I of the *Calcutta Gazette* of the 3rd September 1936, in respect of acquisition of land for the construction of an approach road to Tankabati bridge in the villages of Amirabad and Mallick Chaung, police-station Satkania, district Chittagong, as relates to 0·10 of an acre comprising the revisional survey plot Nos. Na 852 and Na 851 (part) of village Amirabad of the aforesaid thana Satkania and district Chittagong.

Bogra. — No. 9704L.A. — 26th April 1937.—Whereas it appears to the Governor that land is likely to be required to be taken by Government at the expense of the Bogra district board for a public purpose, viz., for the playground of the Shibganj Hussainia Junior Madrassa, in the village of Chandnia Shibganj, jurisdiction list No. 154, thana Shibganj, pargana Prataphazu, zilla Bogra, it is hereby notified that for the above purpose a piece of land comprising cadastral plots Nos. 286, 287, 372 and 288 and measuring, more or less, 0·83 of an acre, is likely to be required within the aforesaid village of Chandnia Shibganj.

This notification is made, under the provisions of section 4 of Act I of 1894, to all whom it may concern.

A plan of the land may be inspected in the office of the Collector of Bogra.

In exercise of the powers conferred by the aforesaid section, the Governor is pleased to authorise the officers for the time being engaged in the undertaking, with their servants and workmen, to enter upon and survey the land and do all other acts required or permitted by that section.

Any person interested in the above land, who has any objection to the acquisition thereof, may, within thirty days after the date on which public notice of the substance of this notification is given in the locality, file an objection in writing before the Collector of Bogra.

DECLARATIONS.

24-Parganas.—No. 9487L.A.—22nd April 1937.—Whereas it appears to the Governor that land is required to be taken by Government at the expense of the Corporation of Calcutta for a public purpose, viz., for the construction of the main drainage outfall channel to the Kulti river (in miles 9 to 11, both inclusive, of the alignment) in the villages of Ghunimeghi, jurisdiction list No. 44, Dakhingazipur, jurisdiction list No. 43, Narayanpur, jurisdiction list No. 74, Serpur, jurisdiction list No. 73, Chakbarali, jurisdiction list No. 88, Malancha, jurisdiction list No. 87, and Nalmuri, jurisdiction list No. 101, of thana Bhangar, parganas Calcutta, Paighati and Havelisahar, district 24-Parganas, it is hereby declared that for the above purpose pieces of lands measuring, more or less, 19·57 acres commencing at chainage 42,240 from the 0 chainage which is at the centre of north abutment of the suburban sluice Bantala and proceeding generally towards the south-east through villages Ghunimeghi and Dakhingazipur up to chainage 43,110, then turning towards the east and proceeding through the villages Ghunimeghi and Narayanpur up to chainage 46,230, then turning towards the south-east and proceeding through the villages Narayanpur, Serpur, Malancha and Chakbarali up to chainage 51,430, then turning to the north-east and passing through the villages Chakbarali and Nalmuri up to chainage 54,440, then turning to the north and passing through villages Nalmuri and Chakbarali up to chainage 55,440 and then turning towards the north-east and passing through the villages Chakbarali and Nalmuri and terminating at chainage 58,080 at Nalmuri varying in width from 800 to 1,800 feet and being 15,840 feet in length, are required within the aforesaid villages of Ghunimeghi, Dakhingazipur, Narayanpur, Serpur, Chakbarali, Malancha and Nalmuri.

This declaration is made under the provisions of section 6 of Act I of 1894 to all whom it may concern in respect of lands of all classes (with the exception of graves and places of religious worship) other than waste and arable lands within miles 9 to 11 (both inclusive) of the alignment which was included in declaration No. 7677L.A., dated the 16th May 1936.

A plan of the land may be inspected in the office of the Chief Engineer to the Corporation of Calcutta as well as in that of the Land Acquisition Officer, Alipore, 24-Parganas.

Burdwan.—No. 9637L.A.—23rd April 1937.—Whereas it appears to the Governor that land is required to be taken by Government at the public expense for a public purpose, viz., for an approach road of the bridge and regulator at mile 6, chainage 43 and 95 feet of distributary No. 11, Branch Canal, Damodar Canal Project, in the village of Balsidanga, jurisdiction list No. 60, thana Bhatar, pargana Mazafarsahi, district Burdwan, it is hereby declared that for the above purpose a piece of land comprising parts of cadastral survey plot No. 239 and measuring, more or less, 0·025 of an acre, is required within the aforesaid village of Balsidanga.

This declaration is made, under the provisions of section 6 of Act I of 1894, to all whom it may concern.

A plan of the land may be inspected in the office of the Special Land Acquisition Officer, Burdwan, as well as in that of the Executive Engineer, Damodar Canal Division, Burdwan.

Chittagong.—No. 9640L.A.—23rd April 1937.—Whereas it appears to the Governor that land is required to be taken by Government partly at the public expense and partly at the expense of the school authorities for a public purpose, viz., for the playground of the Satkania High English School, in the village of Paschim-Dhemsha, thana Satkania, district Chittagong, it is hereby declared that for the above purpose a piece of land comprising the revisional survey plots Nos. 4019 and 4032 and parts of revisional survey plots Nos. 3999, 4000, 4033, 4034 and 3998 and measuring, more or less, 2·38 acres, is required within the aforesaid village of Paschim-Dhemsha.

This declaration is made, under the provisions of section 6 of Act I of 1894, to all whom it may concern.

A plan of the land may be inspected in the office of the Collector of Chittagong.

Chittagong.—No. 9695L.A.—26th April 1937.—Whereas it appears to the Governor that land is required to be taken by Government at the public expense for a public purpose, viz., for the approach road to the bridge over the Tankabati river in the villages of Amirabad and Mallick Chaung in thana Satkania, district Chittagong, it is hereby declared that for the above purpose pieces of land comprising the revisional survey plots Nos. Na 520 (part), Na 522, Na 524 (part), Na 526 (part), Na 525 (part), Na 976, 7475, Na 839, Na 840 (part), Na 842 (part), Na 841, Na 529, Na 528, Na 975, Na 527 (part), Na 838, Na 533 (part), Na 532, 7490 (part), 7489, Na 835, Na 836, Na 837, 7477, Na 843, 7478 (part), 7479 (part), 4867, 4866, 9134 (part), Na 634 (part), 4869 (part), 4870 (part), Na 633 (part), Na 631 (part), 4871 (part), 4897, 4900, Na 972, Na 973 (part), 4898 (part), 9153, 4896, 9152, 4895, 9150, 9151, 4894 (part), Na 629 (part), 4893 (part), 4874 (part), 4873 (part), 4872, 9135, 9115 (part), 9116 (part), 4839 (part), 9119 (part), 4842 (part), 9120 (part), 4836 (part), 4835 (part), 4837 (part), 4838 (part), 9118 (part), Na 636, 9149 (part), 4868, 7611 (part), Ka 167, 7609, 7610 (part), Ka 172 (part), 7612 (part), Ka 166, Ka 165 (part), Ka 164 (part), 7606 (part), Ka 126 (part), 7614 (part), Ka 174 (part), 7588 (part), Ka 122 (part), Ka 121, Ka 120, Ka 175, 7621 (part), 7586 (part), Ka 125 (part), Ka 123 (part), Ka 124 (part), 7587, Ka 117 and Ka 119 of village Amirabad and part of revisional survey plots Nos. 805, 806 and 2837 of village Mallick Chaung and measuring, more or less, 11·85 acres, are required within the aforesaid villages of Amirabad and Mallick Chaung.

This declaration is made, under the provisions of section 6 of Act I of 1894, to all whom it may concern.

A plan of the land may be inspected in the office of the Collector of Chittagong.

Burdwan.—No. 9701L.A., 26th April 1937.—Whereas it appears to the Governor that land is required to be taken by Government at the public expense for a public purpose, viz., for 11th mile of the Burdwan-Arambag road in the villages of Sehara and Mogalmari, jurisdiction list Nos. 55 and 59, respectively, in thana Rayna, and in the village of Baragopinathpur, jurisdiction list No. 102, thana Khandaghosh, pargana Samarshahi, district Burdwan, it is hereby declared that for the above purpose two pieces of land comprising (A) parts of cadastral survey plots Nos. 3049, 3050 and 3104 in mauza Sehara, (B) parts of cadastral survey plot No. 282 in mauza Baragopinathpur and parts of cadastral survey plots Nos. 223, 281-283, 285, 286 and 325 in mauza Mogalmari and altogether measuring, more or less, 4·72 acres, are required within the aforesaid villages of Sehara, Mogalmari and Baragopinathpur.

This declaration is made, under the provisions of section 6 of Act I of 1894, to all whom it may concern.

A plan of the land may be inspected in the office of the Special Land Acquisition Officer, Burdwan, as well as in that of the Executive Engineer, Burdwan Division.

ERRATUM.

Calcutta. — No. 9628L.A. — 23rd April 1937.—In line 6 of declaration No. 6390L.A., dated the 13th August 1923, under section 6 of the Land Acquisition Act, published at page 1185, Part I of the *Calcutta Gazette* of the 15th idem, in respect of the acquisition of land required by the Corporation of Calcutta for widening the eastern end of Ahiritola Street at its junction with Upper Chitpore Road in the town of Calcutta, *for* the expression "12 cottahs and 25 square feet" *read* "11 cottahs 2 chittacks and 37 square feet", and in line 7 of the said declaration *for* the expression "·1988 of an acre" *read* "·1847 of an acre".

Cinchona.

NOTIFICATIONS.

No. 3T.R.—19th April 1937.—Mr. L. G. Richards, Assistant Manager, Government Cinchona Plantation, Mungpoo, is appointed to act, with effect from the 22nd April 1937, as Manager, Government Cinchona Plantation, Munsong, during the absence, on leave, of Mr. H. Thomas, the permanent incumbent, or until further orders.

No. 6T R.—19th April 1937.—Mr. K. S Joneja of the Bengal Subordinate Horticultural Service is appointed to act as Assistant Manager, Government Cinchona Plantation Mungpoo, with effect from the 22nd April 1937, *vice* Mr. L. G. Richards, appointed to act as Manager, Government Cinchona Plantation, Munsong, or until further orders.

O. M. MARTIN,

Secy. to the Govt. of Bengal.

FOREST AND EXCISE DEPARTMENT.

Forests.

NOTIFICATIONS.

Darjeeling. No. 9235For. 17th April 1937. In exercise of the powers conferred by section 20 of the Indian Forest Act, 1927 (XVI of 1927), the Governor is pleased to declare that the boundaries of the forest known as "Patlaybus Reserve" in the district of Dajeeling, which was previously declared as Reserved Forest under notification No. 6710For., dated the 19th August 1918, are as follows :—

(The magnetic bearings have been corrected to the true meridian.)

(The distances have been measured horizontally and are given in Gunter's chains and links.)

Pillar No. 1 is on the western edge of the Tukvar Road from Darjeeling.

From Pillar No.	Description.	To Pillar No.	Remarks.	Lands marching with the Reserve.
1	bearing 270°30′ for 1 chain 96 links	2	....	Mount Hermon Estate.
2	down the Soom Tea Estate Road for 6 chains 83 links.	3	On the eastern edge of the Soom Tea Estate Road at the junction of Soom Tea Estate Road and Soom Forest bridle path.	
3	bearing 349°30′ for 0 chain 94 links ..	4		Soom Tea Estate.
4	down a jhora for 2 chains 93 links ..	5		
5	down the jhora for 17 chains 33 links	6		
6	eastwards along a bridle path for 1 chain 43 links.	7		Lebong Tea Company.
7	eastwards along a bridle path for 3 chains 81 links.	8		
8	eastwards along a bridle path for 2 chains 92 links.	9		
9	eastwards along a bridle path for 3 chains 30 links.	10		
10	eastwards along a bridle path for 2 chains 64 links.	11		
11	eastwards along a bridle path for 4 chains 72 links.	12		
12	eastwards along a bridle path for 6 chains 81 links.	13		
13	eastwards along a bridle path for 3 chains 29 links.	14	On Tukvar Road (District Board Road No. 1).	
14	up the Tukvar Road for 2 chains 16 links.	15		
15	up the Tukvar Road for 1 chain 50 links.	16		
16	up the Tukvar Road for 1 chain 98 links.	17		
17	bearing 193°0′ for 2 chains 32 links ..	18		Tukvar Tea Company.
18	bearing 202°30′ for 2 chains 20 links	19		
19	bearing 183°15′ for 1 chain 24 links ..	20		
20	bearing 182°30′ for 1 chain 47 links ..	21		
21	bearing 189°0′ for 0 chain 63 links ..	22	Crosses a bridle path at 0 chain 59 links.	
22	bearing 193°0′ for 0 chain 42 links ..	23		
23	bearing 199°0′ for 1 chain 2 links ..	24		
24	bearing 197° 15′ for 1 chain 33 links	25		
25	bearing 200° 45′ for 1 chain 69 links	26		
26	bearing 199°45′ for 1 chain 70 links ..	27		
27	bearing 200°30′ for 1 chain 55 links ..	28		
28	bearing 204°0′ for 0 chain 87 links ..	29		
29	bearing 203°30′ for 0 chain 85 links ..	30		
30	bearing 206°30′ for 0 chain 95 links ..	31		
31	bearing 204°45′ for 1 chain 0 link ..	32		
32	bearing 182°45′ for 1 chain 17 links ..	33		
33	bearing 188°0′ for 0 chain 91 links ..	34		
34	bearing 176°0′ for 1 chain 3 links ..	35		
35	bearing 183°15′ for 1 chain 65 links ..	36		
36	bearing 189°0′ for 1 chain 46 links ..	37		
37	bearing 191°30′ for 0 chain 97 links ..	38	On the eastern edge of a bridle path.	
38	bearing 319°0′ for 2 chains 13 links ..	39	On the eastern edge of Tukvar Road.	Mount Hermon Estate.
39	up Tukvar Road for 18 chains 59 links	1		

Darjeeling. No. 9291For - 19th April 1937.- In exercise of the power conferred by clause (2) of section 2 of the Indian Forest Act, 1927 (XVI of 1927), the Governor is pleased to appoint the following persons, being members of the Darjeeling Shooting and Fishing Club in the district of Darjeeling, to discharge the functions of a Forest-officer under the sections of the said Act noted against their names for a period of one year from the 1st May 1937 within the boundaries of the reserved forests of the Darjeeling, Kurseong and Kalimpong Forest Division, in so far as such functions are required by the hunting, shooting and fishing rules made under the said Act to be discharged by a Forest-officer :

Mr. W. K. Langdale-Smith, Tea Planter, Rungli Rungliot Tea Estate, Teesta Valley. Mr. A. C. Ricketta, Tea Planter, Taipoo Tea Estate, Terai. Mr B. N. Crees, Tea Planter, Lopchu Tea Estate. Mr. T. A. Baldry, Tea Planter, Tumsong Tea Estate.	52(*1*)	.. Power to seize forest produce in respect of which there is reason to believe that a forest offence has been committed, and all tools, boats, carts or cattle used in committing any such offenc.
	53	.. Power to release property seized by them under section 52.
Mr. J. Mulroney, Honorary Secretary, Darjeeling Shooting and Fishing Club, Kurseong. Mr. R. R. Kirby, Darjeeling Himalayan Railway, Tindharia.	64(*1*)	.. Power to arrest without warrant.

Jalpaiguri. No. 9295For. 19th April 1937.—In exercise of the power conferred by clause (2) of section 2 of the Indian Forest Act, 1927 (XVI of 1927), the Governor is pleased to appoint the following persons, being members of the Teesta Torsa Game Association (late Jaldacca Fishing and Shooting Association), in the district of Jalpaiguri, to discharge the functions of a Forest-officer under the sections of the said Act noted against their names for a period of one year from the 1st May 1937 within the limits of the reserved forests of the Jalpaiguri Forest Division except the Torsa Reserved Forest south of the Madarihat-Nilpara Road, in so far as such functions are required by the hunting, shooting and fishing rules made under the said Act to be discharged by a Forest-officer :—

Mr. J. Scott of Meenglass Tea Estate .. Mr. J. F. Baldwin of Choonabutti Tea Estate. Mr. H. E. Owen of Hantapara Tea Estate	52(*1*)	.. Power to seize forest produce in respect of which there is reason to believe that a forest offence has been committed, and all tools, boats, cart or cattle used in committing any such offence.
Mr. J. Dewar of Nagaisuree Tea Estate	53	.. Power to release property seized by them under section 52.
	64(*1*)	.. Power to arrest without warrant.

O. M. MARTIN,
Secy. to the Govt. of Bengal.

Orders by the Conservator of Forests, Bengal.

Jalpaiguri-Darjeeling.—No. 5377For.—20th April 1937.—On relief by Babu Janardan Das, Deputy Ranger, 1st grade, Mr. Quazi Gholam Ghaus, probationary Extra Assistant Conservator of Forests, Range Officer, Lower Tondu Range, is posted to the Direction Division as an attached officer, with headquarters at Darjeeling.

The transfer is in the interest of the public service.

W. MEIKLEJOHN,
Senior Conservator of Forests, Bengal.

Excise.

Orders by the Commissioner of Excise and Salt, Bengal.

No. 7Exc.—20th April 1937.—Babu Harendra Nath Mondal, temporary Inspector of Excise and Salt, Tamluk, Midnapore, is allowed leave on average pay for fifteen days, with effect from the 29th April 1937, under rule 81 (*b*) (*ii*) of the Fundamental Rules.

No. 8Exc.—20th April 1937.—Babu Rajani Kanta Nag, Sub-Inspector of Excise and Salt, worked as a temporary Inspector of Excise and Salt in Calcutta on Matches Preventive Work during the period from 7th December 1936 to 11th December 1936 (both days inclusive).

D. MACPHERSON,

Commr. of Excise and Salt, Bengal (offg.).

BOARD OF REVENUE, BENGAL.

NOTIFICATION.

Nadia-Murshidabad.—No. 6281C.P. — 20th April 1937.—In exercise of the powers conferred by clause (2) of section 8 of the Bengal Land Revenue (Assistant Collectors) Regulation, 1821 (IV of 1821), the Board of Revenue authorises Maulvi Saiyid Fazlur Rahman, Settlement Kanungo, who has been placed on duty in connection with the maintenance, for the purposes of section 158A of the Bengal Tenancy Act, 1885, of the record-of-rights of the estate of Babu Amiya Pal Choudhury in the districts of Nadia and Murshidabad, to exercise and perform within the local limits of the said estate any of the powers and duties vested in the Collectors of Land Revenue under any enactment in force therein for the purpose of the said work of maintenance of the record-of-rights.

S. BANERJEE,

Secretary to the Board of Revenue, Bengal.

THE BENGAL PUBLIC SERVICE COMMISSION.

NOTIFICATION.

No. 65P.S.C.—22nd April 1937.—Applications are invited to fill a permanent post of Inspector of Factories in the Bengal Factories Service. The time scale of Inspectors of Factories is Rs. 275-25/2-350-50/2-750 (efficiency bar after the 10th stage). A direct recruit will be given an initial position in the scale as follows, according to their age on the date of assuming duties:—

Age.		Stage of time-scale.
25 (or under)	...	... 1
26	...	... 2
27	...	... 3
28	...	... 4
29	...	... 5
30 (or over)	...	... 6

The appointment will be made by selection from among suitable candidates who must not be more than 30 years of age on the 1st May 1937 and must have—

(*i*) had a first class general education;

(*ii*) served a full apprenticeship as a mechanical engineer, and training in the drawing office;

(*iii*) secured a degree or diploma in Engineering of a British University or technical college, or an associate membership of a recognised British Institute of Engineers, or a certificate of competency issued by the Board of Trade as extra first class or first class engineer;

(*iv*) some years' experience in responsible posts;

(*v*) ability to deal with all questions connected with the electrical and structural engineering that may occur in the course of an Inspector's duties; and

(*vi*) experience in the construction and maintenance of boilers.

2. Candidates, who must be British subjects, are not required to be natives of, or domiciled in, Bengal but preference will be given to such candidates. The selected candidate will be required to undergo an examination by the Medical Board to prove his physical fitness for Government service, will be on probation for two years and his confirmation will depend on approved service.

3. Applications in writing with true copies of testimonials and original certificates, written not more than one year prior to the date of application, from two respectable persons unconnected with the candidate's college or university and not related to him, testifying to his private character, must reach the Secretary to the Bengal Public Service Commission, Writers' Buildings, Calcutta, not later than the 1st June 1937. Any attempt on the part of a candidate to enlist support for his application through persons of influence or officials of Government will disqualify him for appointment. Spontaneous recommendations from persons interested in the candidates, or otherwise known to them, will be disregarded.

S. C. BANERJEE, for *Secretary,*
the Bengal Public Service Commission.

SHERIFF'S OFFICE.

The 11th March 1937.

Notice is hereby given that the Second Criminal Sessions of the year 1937 of the High Court of Judicature at Fort William in Bengal for the town of Calcutta and Factory of Fort William and the places subordinate thereto, will be held at the Court House, in the town of Calcutta, on Monday, the 3rd day of May 1937, at 11 o'clock in the forenoon, and thenceforward from day to day until the said sessions be over. And

it is hereby proclaimed that all persons who are to prosecute any of the prisoners to be brought up for trial at the said sessions be present then and there to prosecute.

S. C. LAW, *Sheriff*.

সরিফ আফিস, সন ১৯৩৭ সালের ১১ই মার্চ্চ।

সকলকে সমাচার দেওয়া যাইতেছে যে, সুবে বাঙ্গালার ফোর্ট উইলিয়ম দুর্গের অধীনে সহর কলিকাতার ও অন্যান্য স্থানের ফৌজদারী বিচার নিষ্পত্তি জন্য আগামী সন ১৯৩৭ সালের ৩রা মে সোমবার বেলা ১১ ঘটিকার সময় এবং যে পর্য্যন্ত সেশিয়ানের কার্য্য সমাধা না হয়, প্রতিদিন উক্ত সময়ে কলিকাতার হাইকোর্টের আপন আদালত ঘরে সন ১৯৩৭ সালের দ্বিতীয় ক্রিমিন্যাল সেশিয়ান বসিবেক এবং এতদ্বারা প্রচার করা যাইতেছে যে, যে সকল ব্যক্তি কোন কয়েদীর বিরুদ্ধে কোন ফৌজদারী মিছিল করিবেক, তাহারা উক্ত স্থানে উক্ত সময়ে হাজির থাকিয়া মোকদ্দমা করে। ইতি।

এস্, সি, লাহা,
সরিফ।

ORDERS BY THE HIGH COURT OF JUDICATURE AT FORT WILLIAM IN BENGAL.

Appointments and Transfers.

Dinajpur.—No. 4646A.—19th April 1937.—Babu Durgadas Basu, probationary munsif of Dinajpur, is appointed to be a munsif in the said district to be ordinarily stationed at Balurghat.

Powers.

Midnapore.—No. 4704A.—20th April 1937.—Babu Bilash Chandra Banik, munsif of Midnapore (Sadar), is vested with the powers of a Judge of a Court of Small Causes for the trial of suits cognizable by such a Court up to the value of Rs. 100 within the local limits of the Sadar munsifi of Midnapore.

Chittagong.—No. 4823A.—22nd April 1937.—Babu Dwijendra Nath Das Gupta, munsif of Chittagong (Sadar), is vested with the powers of a Judge of a Court of Small Causes for the trial of suits cognizable by such a Court up to the value of Rs. 50 within the local limits of the Sadar munsifi of Chittagong.

Leave.

Tippera.—No 4631A.—19th April 1937.—Maulvi Saiyid Tassaduq Hossain, munsif of Comilla, in the district of Tippera, is allowed leave, on average pay, on medical certificate, for four months, under the proviso to rule 81 (*b*) (*ii*) of the Fundamental Rules, with effect from the 2nd February 1937.

2. This cancels the Government of Bengal, Judicial Department, notification No. 2486J., dated the 10th March 1937, granting him leave of the above nature for four months, with effect from the 29th January 1937, published in the *Calcutta Gazette* of the 8th April 1937.

No. 4710A.—20th April 1937.—Maulvi Omer Mallik, munsif, is allowed leave on half average pay for two months, under rule 81 (*d*) of the Fundamental Rules, in extension of the leave granted to him under the orders of the 21st December 1936.

Murshidabad. — No. 4750A. — 21st April 1937.—The orders of the 13th March 1937, granting Babu Nripendra Kumar Ghosh, munsif of Jangipur, in the district of Murshidabad, leave on average pay for the 25th *idem*, under rules 81 (*b*) (*ii*) and 82 (*b*) of the Fundamental Rules, are cancelled.

Tippera.—No. 4815A.—22nd April 1937.—The orders granting Mr. Saurendra Mohan Banarji, munsif of Chandpur, earned leave for one day on the 25th March 1937, under rule 14(*a*) of the Bengal Services (Revision of Leave) Rules, 1934, are cancelled.

Tippera. -No. 4819A.—22nd April 1937.—Mr. Satish Chandra Bagchi, munsif of Chandpur, in the district of Tippera, is allowed leave on average pay for four days, under rules 81(*b*)(*ii*) and 82(*b*) of the Fundamental Rules, with effect from the 22nd March 1937.

Bakarganj.—No. 4832A.—22nd April 1937.—The orders of the 13th March 1937, granting Mr. Bikash Chandra Ghosh, munsif of Patuakhali, in the district of Bakarganj, leave on average pay for the period from the 22nd March to the 25th March 1937, under rules 81(*b*)(*ii*) and 82(*b*) of the Fundamental Rules, are cancelled.

Dacca.—No. 4836A. — 22nd April 1937.—Babu Ramesh Chandra Sen, Subordinate Judge and Small Cause Court Judge of Dacca, is allowed leave on average pay for four months, under rules 81(*b*)(*ii*) and 82(*b*) of the Fundamental Rules, with effect from the 16th April 1937.

Rangpur.—No. 4840A.—22nd April 1937.—Maulvi Md. Ghyasuddin, munsif of Kurigaon, in the district of Rangpur, is allowed leave on average pay for the period from the 7th to the 12th April 1937, under rules 81(*b*)(*ii*) and 82(*b*) of the Fundamental Rules.

Khulna.—No. 4872A.—23rd April 1937. —Babu Baidya Nath Mukharji, munsif of Satkhira, in the district of Khulna, is allowed leave on average pay for the period from the 26th March to the 29th April 1937, under rules 81(*b*) (*ii*) and 82(*b*) of the Fundamental Rules, in extension of the leave granted to him under the orders of the 8th March 1937.

NOTIFICATIONS.

No. 4690G.—20th April 1937.—The following Rule having been framed by the High Court of Judicature at Fort William in Bengal in the exercise of the power invested in it by section 20 of the Court-fees Act, 1870 (VII of 1870), and confirmed by the Provincial Governments of Bengal and Assam, is published for general information:—

ISSUED BY AUTHORITY OF THE HIGH COURT OF JUDICATURE AT FORT WILLIAM IN BENGAL.

Rule No. 11 (Civil) of 1937.

In Rule 680 (2), Chapter 26, pages 268-270, Civil Rules and Orders, Volume I,—

(*i*) *substitute* "is valued at Rs. 1,000 and over" *for* "is valued at over Rs. 1,000" in the heading of column 2,

(*ii*) *substitute* "is valued at Rs. 50 and over but less than Rs. 1,000" *for* "does not exceed Rs. 1,000 and exceeds Rs. 50 in value" in the heading of column 3, and

(*iii*) *substitute* "is less than Rs. 50 in value" *for* "does not exceed Rs. 50 in value" in the heading of column 4.

No. 4715St.—20th April 1937.—The following General Letter No. 6 (Civil), dated the 6th April 1937, is published for general information.

N. L. HINDLEY,
Registrar, Appellate Side (offg.).

High Court, Appellate Side, English Department.

General Letter No. 6 (Civil) of 1937, dated Calcutta, the 6th April 1937.

From—N. L. Hindley, Esq., M.A., I.C.S., Barrister-at-Law, Officiating Registrar of the High Court of Judicature at Fort William in Bengal, Appellate Side,

To—The District and Additional Judges in Bengal and Assam.

His Majesty the King-Emperor's birthday, 1937.

In continuation of the Court's General Letter No. 36 (Civil), dated the 30th November 1936, I am directed to say that Wednesday, the 9th June 1937, which has been fixed for the celebration in India of His Majesty the King-Emperor's birthday, should be observed as a close holiday in the civil courts subordinate to the High Court.

(I am to request that all courts subordinate to yours may be informed accordingly.)

( ) Not for Additional Judges.

N. L. HINDLEY,
Registrar, Appellate Side (offg.).

ORDERS BY COMMISSIONERS OF DIVISIONS.

Burdwan Division—Chinsura.

No. 543M.—19th April 1937.—In exercise of the power conferred by section 50 of the Bengal Municipal Act of 1932 (Bengal Act XV of 1932), it is hereby notified for general information that at the general election of the Commissioners of the Tamluk Municipality, in the district of Midnapore, held on the 22nd March 1937, the following gentlemen have been duly elected as Commissioners of that municipality:—

Rai Sasadhar Das Bahadur.

Babu Manmatha Nath Basu.

Babu Jnanendra Nath Maity.

Babu Surendra Nath Pattanayak.

Babu Ashutosh Misra.

Babu Rajani Kanta Misra.

Babu Bhupati Charan Misra.

Babu Jamini Kanta Das.

Maulvi Noor Ali Shah (minority community).

No. 556M.—19th April 1937.—In exercise of the power conferred by section 50 of the Bengal Municipal Act of 1932 (Bengal Act XV of 1932), it is hereby notified for general information that at the general election of the Commissioners of the Ramjibanpur Municipality in the district of Midnapore held on the 21st March 1937, the following gentlemen have been duly elected as Commissioners of that municipality:—

Ward No. I.

Babu Anukul Chandra Pal.
Babu Ramrup Ganguly.

Ward No. II.

Babu Kanai Lall Modak.

Ward No. III.

Babu Surendranath Piri.
Babu Prakash Chandra Piri.

Ward No. IV.

Babu Subal Chandra Mero.
Babu Charu Darsan Ghose.

No. 1421J.G.—20th April 1937.—Maulvi Sakhawat Hossain, Sub-Deputy Collector and Circle Officer of Bhagawanpur in the Contai subdivision of the Midnapore district, is granted, under rule 81 (*b*) (*ii*) of the Fundamental Rules, leave on average pay for two weeks from the 14th April 1937.

No. 581M.—21st April 1937.—In exercise of the power conferred by section 50 of the Bengal Municipal Act of 1932 (Act XV of 1932), it is hereby notified for general information that the Commissioners of the Bhadreswar Municipality by a resolution passed at a special meeting held on the 14th April 1937, duly elected Mr. E. J. Robertson to be their Chairman, *vice* Mr. W. Aitken, resigned.

Erratum.—No. 1255R.G.—24th April 1937.—In the list showing names of members of the Uttar-Jhapordah Debt Settlement Board in the district of Howrah, published at page 513, Part I of the *Calcutta Gazette*, dated the 11th March 1937, *read* "Babu Dulal Chandra Ghose" *in place of* "Babu Anukul Chandra Ghosh".

A. J. DASH, *Commissioner.*

No. 1274E.—19th April 1937.—It is hereby notified that Mr. Deva Prasanna Mukherjee, a candidate for election from the Burdwan Division South-West General Constituency of the Bengal Legislative Council, has filed, on the 16th April 1937, his return of election expenses and the declarations in respect thereof, as required under sub-rules (*1*) and (*2*) of rule 7 of the Bengal Legislative Assembly and the Bengal Legislative Council Electoral (Election Expenses and Election Petitions) Rules, 1936. These can be inspected in the office of the Commissioner of the Burdwan Division, Chinsura, during office hours on payment of a fee of one rupee.

2. Any person may, on payment of a fee of Rs. 2 for each copy, obtain attested copies of the return or declaration or of any part thereof.

No. 1295E.—23rd April 1937.—It is hereby notified that Mr. Mohiuddin, a candidate for election from the Hooghly-*cum*-Howrah Municipal Muhammadan Constituency of the Bengal Legislative Assembly, has filed on the 19th April 1937 his return of election expenses and the declarations in respect thereof, as required under sub-rules (*1*) and (*2*) of rule 7 of the Bengal Legislative Assembly and the Bengal Legislative Council Electoral (Election Expenses and Election Petitions) Rules, 1936. These can be inspected in the office of the Commissioner of the Burdwan Division, Chinsura, during office hours on payment of a fee of one rupee.

2. Any person may, on payment of a fee of Rs. 2 for each copy, obtain attested copies of the return or declaration or of any part thereof.

A. J. DASH,
Commissioner and Returning Officer.

Chinsura, the 17th April 1937.

No. 3635J.G.—It is hereby notified for general information that, under section 13 of the Bengal Village Self-Government Act, 1919 (Bengal Act V of 1919), read with rule 36 of the rules for the election and appointment of members of union boards, etc., Maulvi Abdul Nouser Ali has been appointed to be a member of the Janai union board in police-station Chanditola in the Serampore subdivision of the district of Hooghly, *vice* Maulvi Enayet Ahmed, removed.

S. P. GHOSH, *District Magistrate.*

Bankura, the 21st April 1937.

No. 3748J.—It is hereby notified for general information that, under section 13 of the Bengal Village Self-Government Act, 1919 (Bengal Act V of 1919), read with rule 36 of the rules for the election and appointment of members of union boards, Babu Hari Pada Mondal has been appointed as a member of Chiltore union board in police-station Raipur in the Sadar subdivision of the district of Bankura, *vice* Babu Gostha Behari Sarkar, deceased.

No. 3752J.—It is hereby notified for general information that, under section 13 of the Bengal Village Self-Government Act, 1919 (Bengal Act V of 1919), read with rule 36 of the rules for the election and appointment of members of union boards, Babu Ashutosh Chaudhury has been appointed as a member of Bikrampur union board in police-station Raipur in the Sadar subdivision of the district of Bankura, *vice* Babu Hem Chandra Mondal, deceased.

J. M. CHATARJI, *District Magistrate.*

Burdwan, the 21st April 1937.

It is hereby notified for general information that, under section 13 of the Bengal Village Self-Government Act, 1919 (Bengal Act V of 1919), read with rule 35 of the rules for the election and appointment of members of union boards, etc., Babu Prafulla Kumar Ghose has been duly elected to be a member of Ward No. 1 of the Jamuria union board in police-station Jamuria in the Asansol subdivision of Burdwan, *vice* Mr. P. S. Keelan, C.I.E., resigned.

It is hereby notified for general information that, under section 13 of the Bengal Village Self-Government Act, 1919 (Bengal Act V of 1919), read with rule 36 of the rules for the election and appointment of members of union boards, etc., Mr. Joseph Arthur Powell has been appointed by the District Magistrate of Burdwan to be a member of the Jamuria union board in police-station Jamuria in the Asansol subdivision of Burdwan, *vice* Mr. S. C. Ghosh, resigned.

S. DUTT, *District Magistrate.*

Bankura, the 21st April 1937.

It is hereby notified that Maulvi Obbadur Rahim, an accepted candidate for the election from the Bankura Muhammadan Rural Constituency of the Bengal Legislative Assembly, has filed on the 8th April 1937 his return of election expenses and the declarations in respect thereof, as required under sub-rules (*1*) and (*2*) of rule 7 of the Bengal Legislative Assembly and the Bengal Legislative Council Electoral (Election Expenses and Election Petitions) Rules, 1936. These can be inspected in the office of the District Magistrate, Bankura, on payment of a fee of one rupee between the hours of 6-30 a.m. and 11-30 a.m. for a week from the publication of this notice in the *Calcutta Gazette*.

2. Any person may, on payment of a fee of Rs. 2 for each copy, obtain attested copies of the return or declarations or any part thereof.

J. M. CHATARJI, *District Magistrate (Returning Officer)*.

Bankura, the 21st April 1937.

It is hereby notified that Maulvi Abul Hassan Muhammad Abdus Salaam, an accepted candidate for the election from the Bankura Muhammadan Rural Constituency of the Bengal Legislative Assembly, has filed on the 30th March 1937 his return of election expenses and the declarations in respect thereof, as required under sub-rules (*1*) and (*2*) of rule 7 of the Bengal Legislative Assembly and the Bengal Legislative Council Electoral (Election Expenses and Election Petitions) Rules, 1936. These can be inspected in the office of the District Magistrate Bankura, on payment of a fee of one rupee between the hours of 6-30 a.m. and 11-30 a.m. for a week from the publication of this notice in the *Calcutta Gazette*.

2. Any person may, on payment of a fee of Rs. 2 for each copy, obtain attested copies of the return or declarations or any part thereof.

J. M. CHATARJI, *District Magistrate (Returning Officer)*.

Burdwan, the 19th April 1937.

It is hereby notified that Babu Jitendra Nath Mitra, a withdrawn candidate for the election from the Burdwan Central General Rural Constituency of the Bengal Legislative Assembly, has on the 12th day of April 1937 filed his return of election expenses as required by rule 7, clauses (*1*) and (*2*) of the Bengal Legislative Assembly and the Bengal Legislative Council Electoral (Election Expenses and Election Petitions) Rules, 1936. These can be inspected in the office of the undersigned at Burdwan on payment of a fee of Re. 1 between the hours of 11 a.m. and 3 p.m. on week days for one week from publication of this notice in the gazette, or from 22nd April 1937, whichever is later.

Any person may obtain attested copies of the return or declaration or any part thereof on payment of a fee of rupees two for each copy.

S. N. DUTT, *Subdivisional Officer and Returning Officer*.

Suri, the 19th April 1937.

It is hereby notified for general information that Maulvi Md. Abdul Wasey, a candidate for the seat in the Birbhum Rural Muhammadan Constituency of the Bengal Legislative Assembly, has filed his return of election expenses and declarations on the 15th April 1937. The return can be inspected in the office of the District Magistrate, Suri, on any working day during office hours on payment of a fee of Re. 1 only. Attested copy of the return or any part thereof may be obtained on payment of a fee of Rs. 2 for each copy.

A. HYE, *Returning Officer*.

Suri, the 22nd April 1937.

It is hereby notified for general information that Babu Atul Krishna Roy, a candidate for the reserved seat for the scheduled castes in the Birbhum Rural General Constituency of the Bengal Legislative Assembly, has filed his return of election expenses and declarations on the 20th April 1937. The return can be inspected in the office of the District Magistrate of Birbhum, Suri, on any working day during office hours on payment of a fee of Re. 1 only. Attested copy of the return or any part thereof may be obtained on payment of a fee of Rs. 2 for each copy.

A. HYE, *Returning Officer*.

Contai, the 20th April 1937.

It is hereby notified for general information that under rule 9 of the Bengal Legislative Assembly and the Bengal Legislative Council Electoral (Election Expenses and Election Petitions) Rules, 1936, Babu Iswar Chandra Mal, who was nominated for election to the Midnapore South-East General (Rural) Constituency, lodged with me his return of election expenses and declaration, as required under sub-rules 2 and 3 of rule 7 of the said rules read with rule 5 in Part II of the Government of India (Provincial Election) (Corrupt Practice and Election Petitions) Order, 1936. They may be inspected in the office of the Subdivisional Magistrate, Contai, between 11 a.m. and 3 p.m. on any working day from the date of publication in the *Calcutta Gazette* on payment of a fee of Re. 1 only.

B. G. RAO, *Returning Officer*.

Contai, the 23rd April 1937.

It is hereby notified for general information that, under rule 9 of the Bengal Legislative Assembly and the Bengal Legislative Council Electoral (Election Expenses and Election Petitions) Rules, 1936, Babu Trailakhya Nath Prodhan, who was nominated for election to the Midnapore South-West General (Rural) Constituency, lodged with me his return of election expenses and declaration as required under sub-rules (*2*) and (*3*) of rule 7 of the said rules read with rule 5 in Part II of the Government of India (Provincial Election) (Corrupt Practices and Election

Petitions) Order, 1936. They may be inspected in the office of the Subdivisional Magistrate, Contai, between 11 a.m. and 3 p.m. on any working day on payment of a fee of Re. 1 only.

Any person may, on payment of a fee of Rs. 2 for each copy, obtain attested copies of the return or declaration or any part thereof.

B. G. RAO, *Returning Officer.*

Chinsura, the 21st April 1937.

No. 3735J.G. — It is hereby notified that Babu Radha Krishna Pal of Bengai, post office Anur, district Hooghly, a candidate for election from the Hooghly South-West (Rural) General Constituency of the Bengal Legislative Assembly, who withdrew his candidature within the statutory period, filed on the 17th April 1937 his return of election expenses and declarations in respect thereof, as required under sub-rules (*1*) and (*2*) of rule 7 of the Bengal Legislative Assembly and the Bengal Legislative Council Electoral (Election Expenses and Election Petitions) Rules, 1936. These can be inspected in the office of the District Magistrate, Hooghly, Chinsura, on payment of a fee of Re. 1 between the hours of 11 a.m. and 4 p.m. on the days the office is open for a week from the publication of this notice in the *Calcutta Gazette*, or from the 21st April 1937, whichever is later.

2. Any person may, on payment of a fee of Rs. 2 for each copy, obtain attested copies of the returns or declarations or of any part thereof.

S. P. GHOSH, *Returning Officer.*

Tamluk, the 22nd April 1937.

No. 3027. — Under rule 9 of the Bengal Legislative Assembly and the Bengal Legislative Council Electoral (Election Expenses and Election Petitions) Rules, 1936, it is hereby notified for general information that Babu Bankim Chandra Bhawmik, a duly nominated candidate for election from the Midnapore East Rural (General) Constituency of the Bengal Legislative Assembly, has filed on the 11th day of April 1937 his return of election expenses and the declarations in respect thereof, as required under sub-rules (*1*) and (*2*) of rule 7 of the aforesaid rules. These can be inspected in the office of the Subdivisional Magistrate, Tamluk, on payment of a fee of Re. 1 between the hours of 7 a.m. and 11 a.m. for a week from the publication of the notice in the *Calcutta Gazette*.

Any person may, on payment of a fee of Rs. 2 for each copy, obtain attested copies of the return or declarations or any part thereof.

C. A. NORONHA, *Returning Officer (Subdivisional Officer).*

Vishnupur, the 23rd April 1937.

Under rule 9 of the Bengal Legislative Assembly and the Bengal Legislative Council Electoral (Election Expenses and Election Petitions) Rules, 1936, it is hereby notified for general information that Rai Bahadur Satya Kinkar Sahana, Bidyabinode, a candidate for the seat in the Bankura East Rural (General) Constituency of the Bengal Legislative Assembly, has filed in my office the return of election expenses and declarations on the 20th April 1937. This return is open to inspection in the office of the Subdivisional Officer, Vishnupur, district Bankura, on any working day between the hours of 6-30 a.m. and 11-30 a.m. on payment of a fee of Re. 1. Attested copy of the returns or any part thereof may be obtained on payment of a fee of Rs. 2 for each copy.

V. N. RAJAN, *Returning Officer (Subdivisional Officer).*

Orders by the Deputy Inspector-General of Police, Burdwan Range.

Chinsura.—No. 2947.—23rd April 1937. — In modification of the orders published under notification—Chinsura—No. 7883—6th November 1936, in the *Calcutta Gazette*, dated the 12th November 1936, Mr. E. C. Rush, Inspector, Midnapore, is granted 1 year 1 month and 21 days' leave, *viz.*, 4 months' leave on average pay, under rule 81 (*b*) (*ii*) of the Fundamental Rules, and leave on half average pay for the remaining period, under rule 81 (*d*) of those rules, with effect from the 20th October 1936.

Babu Jitendra Nath Ray, Inspector, Hooghly, is granted 1 month's leave on half average pay, on medical certificate, in extension of the leave already granted to him.

The existing acting arrangement will continue.

J. M. MACKENZIE,

Deputy Inspector-General of Police (offg.).

Chittagong Division—Chittagong.

No. 2292G.—19th April 1937.—In exercise of the power conferred by sub-section (*2*) of section 3 of the Bengal Agricultural Debtors Act, 1935 (Bengal Act VII of 1936), delegated to Commissioners by Government notification No. 10105-8 L.R., dated the 14th July 1936, the undersigned is pleased to appoint Maulvi Md. Abu Sayed Jahurul Huq to be a member of "South Hamchadi" Debt Settlement Board in police-station Lakshmipur in the Sadar subdivision of the Noakhali district, in place of Maulvi Abdur Rahman Munshi, deceased.

No. 2309G. — 19th April 1937. — Babu Dwijendra Nath Chakrabatti, Sub-Deputy Collector and Circle Officer, Noakhali, Sadar, is transferred to general duty within the same district.

The transfer is made in the public interest.

No. 2314G.—19th April 1937.—Maulvi Muhammad Obaidul Kader, Sub-Deputy Collector, Chittagong, is transferred to Noakhali to work as Circle Officer, Sadar.

The transfer is made in the public interest.

No. 23260J. — 20th April 1937. — Maulvi Fazlul Karim, No. I, Sub-Deputy Collector, Noakhali, was allowed leave on average pay for thirty-one days, under rule 81(*b*)(*ii*) of the Fundamental Rules, with effect from the 10th March 1937.

No. 23790J. — 22nd April 1937. — Babu Jatindra Mohan Das, Sub-Deputy Collector, on leave, who has been posted to the Chittagong Division in Government memorandum No. 4368A., dated the 17th April 1937, is posted to the headquarters station of the Chittagong district for employment on general duty.

The posting is made in the public interest.

No. 24210J.—23rd April 1937.—In exercise of the power conferred by sub-section (2) of section 3 of the Bengal Agricultural Debtors Act, 1935 (Bengal Act VII of 1936), delegated to Commissioners by Government notification No. 10105-8L.R., dated the 14th July 1936, the undersigned is pleased to appoint the following persons to be members of the undermentioned Debt Settlement Boards in the district of Noakhali in addition to the members appointed under Government notification No. 10103L.R., dated the 14th July 1936:—

Feni subdivision.

Feni Debt Settlement Board.

Members.

Maulvi Bazlur Rahman.
Maulvi Ali Mia.

Munshirhat Debt Settlement Board.

Members.

Babu Tarak Chandra Mazumdar.
Maulvi Ali Ashraf Chaudhury.

No. 24240J.—23rd April 1937.—In exercise of the power conferred by sub-section (2) of section 3 of the Bengal Agricultural Debtors Act, 1935 (Bengal Act VII of 1936), delegated to Commissioners by Government notification No. 10105-8L.R., dated the 14th July 1936, the undersigned is pleased to appoint Maulvi Abdul Kader Chaudhury to be a member of the Munshirhat Debt Settlement Board in police-station Chhagalnaya in the Feni subdivision of the Noakhali district, in place of Maulvi Abdullah, resigned.

J. D. V. HODGE, *Commissioner (offg.)*.

Noakhali, the 20th April 1937.

No. 3372J.—It is notified for general information under rule 9 of the Bengal Legislative Assembly and the Bengal Legislative Council Electoral (Election Expenses) Rules, 1936, that the return of the election expenses supported by declarations for the last general election of a member to the Bengal Legislative Assembly from the Noakhali Rural General Constituency has been lodged by the candidate, Sasi Kumar Bhowmic, on the 14th April 1937.

Any person shall, on payment of a fee of one rupee, be entitled to inspect the above return or declaration in the office of the Returning Officer, Noakhali, between the hours of 11 a.m. and 5 p.m. on office days.

R. K. MITRA, *Returning Officer (District Magistrate)*.

Noakhali, the 20th April 1937.

No. 3374J. — It is notified for general information under rule 9 of the Bengal Legislative Assembly and the Bengal Legislative Council Electoral (Election Expenses) Rules, 1936, that the return of the election expenses supported by declarations for the last general election of a member to the Bengal Legislative Assembly from the Noakhali Central Muhammadan (Rural) Constituency has been lodged by the candidate, Hamidul Hoque Chaudhury, on the 6th March 1937.

Any person shall, on payment of a fee of one rupee, be entitled to inspect the above return or declaration in the office of the Returning Officer, Noakhali, between the hours of 11 a.m. and 5 p.m. on office days.

R. K. MITRA, *Returning Officer (District Magistrate)*.

Comilla, the 19th April 1937.

Under rule 9 of the Bengal Legislative Assembly Electoral (Election Expenses and Election Petitions) Rules, 1936, Asimaddin Ahmed, a duly nominated candidate (but withdrawn) for a seat in the Tippera South Muhammadan Constituency of the Bengal Legislative Assembly, has lodged in my office on the 17th April 1937 the return of election expenses and declarations. Anybody can inspect them in the office of the Sadar Subdivisional Officer, Comilla, on any opening day between the hours 11 a.m. and 5 p.m. on payment of a fee of Re. 1, and is entitled to get a copy or any part thereof on payment of a fee of Rs. 2 for each copy.

M. K. ACHARJEE, *Returning Officer (Subdivisional Officer)*.

Comilla, the 22nd April 1937.

Under rule 9 of the Bengal Legislative Assembly Electoral (Election Expenses and Election Petitions) Rules, 1936, Maulvi Abdul Rahaman, a duly nominated candidate (but withdrawn) for a seat in Tippera South Rural Muhammadan Constituency of the Bengal Legislative Assembly, has lodged in my office on the 21st April 1937 the return of election expenses and declarations. Anybody can inspect them in the office of the Sadar Subdivisional Officer, Comilla, on payment of a fee of Re. 1 and is entitled to get a copy or any part thereof on payment of a fee of Rs. 2, for each copy. The time of inspection will be on any opening day between the hours of 11 a.m. and 5 p.m.

M. K. ACHARJEE, *Returning Officer (Subdivisional Officer)*.

Noakhali, the 20th April 1937.

No. 3376J.—It is notified for general information under rule 9 of the Bengal Legislative Assembly and the Bengal Legislative Council Electoral (Election Expenses) Rules, 1936, that the return of the election expenses supported by declarations for the last general election of a member to the Bengal Legislative Assembly from the Noakhali North Muhammadan (Rural) Constituency has been lodged by the candidate, Rashid Ahmed Maulvi, on the 12th April 1937.

Any person shall, on payment of a fee of one rupee, be entitled to inspect the above return or declaration in the office of the Returning Officer, Noakhali, between the hours of 11 a.m. and 5 p.m. on office days.

G. CHATTERJEE, *Returning Officer (Subdivisional Officer).*

Dacca Division—Dacca.

No. 2171J.—20th April 1937.—It is hereby notified for general information that under rule 23 of the manual of rules for the management of charitable hospitals and dispensaries in Bengal, the following gentlemen are appointed to be members of the committee for the management of the charitable dispensary at Bajitpur in the district of Mymensingh, in place of those noted against their names:—

Maulvi Md. Himmat Ali, B.L., munsif, in place of Maulvi Makbular Rahman, munsif, transferred.

Babu Surja Kanta Dutt, Naib, Nawab Bahadur Estate, in place of Babu Aghore Nath Ganguly, transferred.

No. 2177J.—20th April 1937.—This office notification No. 1817J., dated the 5th April 1937, appointing Babu Sailendra Nath Das Gupta, Sub-Deputy Collector, Dacca, as Circle Officer, Manikganj West Circle, in that district, is cancelled.

No. 2182J.—20th April 1937.—Babu Benoy Bhusan Chaudhuri, Sub-Deputy Collector, Dacca, is transferred to Manikganj subdivision of that district on general duty.

No. 2187J. — 20th April 1937. — Maulvi Kabiruddin Ahmed Khan, Sub-Deputy Collector, Manikganj, in the district of Dacca, is appointed to be Circle Officer of Manikganj West Circle in that district.

No. 2192J.—20th April 1937.—It is hereby notified for general information that notification No. 6466J., dated the 18th December 1936, in so far as it relates to the appointment of Babu Benoy Bhusan Gupta to be a member of the committee for the management of the charitable dispensary at Barisal Sadar in the district of Bakarganj, is cancelled, and that under rule 20 (*b*) of the manual of rules for the management of charitable hospitals and dispensaries in Bengal, published with Government notification No. 138T.Medl., dated the 7th June 1915, Babu Ashok Chandra Gupta is appointed to be a member of the said committee.

No. 2230J.—21st April 1937.—It is hereby notified for general information that, under rule 63(*1*) of the Bengal Jail Code, 1919, Babu Birendra Kishore Roy Choudhury, M.L.A., is appointed to be a non-official visitor of the Mymensingh District Jail, in place of Babu Satish Chandra Roy Choudhury, with effect from the date of this notification.

H. R. WILKINSON, *Commissioner (offg.).*

Mymensingh, the 20th April 1937.

No. 230C.—It is hereby notified for general information that—

(*a*) Under sub-section (*2*) of section 6 of the Bengal Village Self-Government Act, 1919 (Bengal Act V of 1919), the following gentlemen have been duly elected as members of the undermentioned union board in police-station Tangail of the Tangail subdivision of the Mymensingh district:—

Karatia union board.

Tangail police-station.

Md Mehadiali Khan Pani of Karatia.
Syed Mujafar Ali Khan Pani of Karatia.
Babu Jogendra Kumar Chanda of Alsa.
Babu Sachindra Kumar Roy Choudhury of Narundu.
Babu Nirmal Chandra Ghose of Bhatkura.
Maulvi Amir Ali Talukdar of Karatia.

(*b*) Under sub-section (*3*) of section 6 of the Bengal Village Self-Government Act, 1919 (Bengal Act V of 1919), the following gentlemen have been appointed by me to be the members of the said union board:—

Babu Peari Mohan Guha.
Maulvi Syed Nural Huda.
Maulvi Abdus Sovan Khan.

K. G. MORSHED, *District Magistrate.*

Faridpur, the 23rd April 1937.

No. 3490J. — It is hereby notified for general information that, under section 13 of the Bengal Village Self-Government Act (Act V of 1919), Munshi Abdul Wahed Fakir has been duly elected to be a member of the Satoir union board in police-station Bhusna in the Sadar subdivision of the Faridpur district, *vice* Munshi Abbas Fakir, deceased.

[ILLEGIBLE], for *District Magistrate.*

Tangail, the 20th April 1937.

Under rule 9 of the Bengal Legislative Assembly Electoral (Election Expenses and Election Petitions) Rules, 1936, Khondker Azizor Rahman and Nizamuddin Ahmed, duly nominated candidates for seats in the Tangail South Mahomedan Rural and Tangail West Mahomedan Rural Constituencies, respectively, of the Bengal Legislative Assembly, have lodged with me their returns of election expenses and declarations on the 19th April 1937.

Anybody can inspect them on all working days between the hours of 11 a.m. and 5 p.m. on payment of the prescribed fees and is entitled to get a copy thereof or a part thereof on payment of Rs. 2 for each copy.

M. SARKAR, for *Returning Officer* (*Subdivisional Magistrate*).

Pirojpur, the 22nd April 1937.

Whereas Maulvi Abdul Ali, a duly nominated candidate for the by-election to a seat of the Pirojpur North (Rural) Muhammadan Constituency, has lodged the return and declaration as required under rule 7 (*2*) of the Bengal Legislative Assembly and Bengal Legislative Council Electoral (Election Expenses and Election Petitions) Rules, 1936, on the 21st April 1937, it is notified for information of the public that the document in question can be inspected and attested copies thereof may be obtained at the office of the undersigned between 11 a.m. and 3 p.m. on all week days excepting holidays on payment of the required fee of Rs. 2 only.

S. GUPTA, *Returning Officer*.

Pirojpur, the 23rd April 1937.

Whereas Maulvi Syed Mahammad Afzal (Khan Sahib), a duly elected candidate for the by-election to the seat of the Pirojpur North Rural Muhammadan Constituency, has lodged the return and declaration as required under rule 7 (*2*) of the Bengal Legislative Assembly and Bengal Legislative Council Electoral (Election Expenses and Election Petitions) Rules, 1936, on the 23rd April 1937, it is notified for information of the public that the document in question can be inspected and attested copies thereof may be obtained at the office of the undersigned between 11 a.m. and 3 p.m on all week days excepting holidays on payment of the required fee of Rs. 2 only.

S. GUPTA, *Returning Officer*.

Pirojpur, the 23rd April 1937.

Whereas Maulvi Kazi Abdul Gani, a duly nominated candidate for the by-election to the seat of the Pirojpur North (Rural) Muhammadan Constituency, has lodged the return and declaration as required under rule 7 (*2*) of the Bengal Legislative Assembly and Bengal Legislative Council Electoral (Election Expenses and Election Petitions) Rules, 1936, on the 23rd April 1937, it is notified for information of the public that the document in question can be inspected and attested copies thereof may be obtained at the office of the undersigned between 11 a.m. and 3 p.m. on all week days excepting holidays on payment of the required fee of Rs. 2 only.

S. GUPTA, *Returning Officer*.

Presidency Division—Calcutta.

No. 688R.G.—12th April 1937. — Maulvi Samiruddin Shah, Sub-Deputy Collector and Circle Officer, Jhenidah, Jessore, is granted leave on average pay for one month and ten days, under rule 81 (*b*) (*ii*) of the Fundamental Rules, with effect from the 3rd May 1937.

No. 239J.G. — 16th April 1937. — It is hereby notified for general information that in exercise of the powers conferred on me by rule 63 (*2*) of the Bengal Jail Code, 1919, Volume I, as revised, I appoint Miss B. E. Guerin to be a non-official lady visitor of the Krishnagar Jail in the district of Nadia for a period of two years, with effect from the date of this notification.

No. 243J.G. — 16th April 1937. — It is hereby notified for general information that in exercise of the powers conferred on me by rule 63 (*7*) of the Bengal Jail Code, 1919, Volume I, as revised, I appoint Maulvi Aftab Hossain Joarder and Babu Lakshmi Narayan Biswas, who are members of the Bengal Legislative Assembly, to be non-official visitors of the Krishnagar District Jail in the district of Nadia from the date of this notification to the expiry of the present term of their office as members of the Bengal Legislative Assembly.

No. 696R.G. —16th April 1937. — Maulvi Asad Husain, Sub-Deputy Collector, Murshidabad, is granted leave on average pay for six days, under rule 81 (*b*) (*ii*) of the Fundamental Rules, with effect from the 5th April 1937.

No. 616M.—21st April 1937. — In accordance with section 50 of the Bengal Municipal Act, 1932 (Bengal Act XV of 1932), it is hereby notified for general information that Dr. L. M. Chakravartty has been duly elected a Commissioner of the Tollygunj Municipality in the district of the 24-Parganas, *vice* Mr. Gholam Hossain Shah, deceased.

H. J. TWYNAM, *Commissioner*.

Jessore, the 17th April 1937.

It is hereby notified for general information that, under section 13 of the Bengal Village Self-Government Act, 1919 (Bengal Act V of 1919), read with rule 35 of the rules for the election and appointment of members of union boards, etc., the gentlemen whose names are noted below have been duly elected to be members of the following union boards in the Bongaon subdivision of the Jessore district:—

Bongaon police-station.

Palla union board.

Munshi Hazari Sardar, son of Mosab Sardar, village Harishpur, *vice* Munshi Kanai Mondal, resigned.

Chowberia union board.

Babu Gostha Behari Chatterji, son of late Kunja Behari Chatterji, village Chowberia, *vice* Munshi Joynuddin Mondal, deceased.

Ghatbaor union board.

Babu Nibaran Chandra Banerji, son of Babu Bipin Behari Banerji, village Ghatbaor, *vice* Munshi Imam Ali Biswas, deceased.

Motigunj union board.

Munshi Ebadat Ali Tarafdar, son of late Abed Ali Tarafdar, village Joypur, *vice* Munshi Afsar Mondal, deceased.

Sarsa police-station.

Bahadurpur union board.

Babu Bimal Krishna Biswas, son of Babu Uma Charan Biswas, village Natadigha, *vice* Munshi Fakir Chand Mondal, deceased.

Goga union board.

Babu Mrinmoy Kumar Roy, son of Babu Monmotha Nath Roy, village Goga, *vice* Munshi Maniruddin Mondal, deceased.

Gaighata police-station.

Dooma union board.

Munshi Abdul Bari Mondal, son of late Darap Mondal, village Dooma, *vice* Munshi Somser Mondal, deceased.

Jessore, the 24th April 1937.

It is hereby notified for general information that, under section 13 of the Bengal Village Self-Government Act, 1919 (Bengal Act V of 1919), read with rule 36 of the rules for the election and appointment of members of union boards, Babu Ram Krishna Biswas has been duly nominated to be a member of the Sripur union board in the Magura subdivision of the district of Jessore, *vice* Babu Shib Nath Biswas, deceased.

It is hereby notified for general information that, under section 13 of the Bengal Village Self-Government Act, 1919 (Bengal Act V of 1919), read with rule 36 of the rules for the election and appointment of members of union boards, Munshi Khorshed Ali Molla has been duly nominated to be a member of the Amalsar union board in the Magura subdivision of the district of Jessore, *vice* Munshi Baktar Ali Biswas, deceased.

It is hereby notified for general information that, under section 13 of the Bengal Village Self-Government Act, 1919 (Bengal Act V of 1919), read with rule 35 of the rules for the election and appointment of members of union boards, etc., Babu Amulya Charan Biswas has been elected a member of the union board No. 3—Bhawanipur in Harinakundu police-station in the Jhenidah subdivision of the district of Jessore, *vice* Dr. Herastulla Joarder, deceased.

It is hereby notified for general information that, under section 13 of the Bengal Village Self-Government Act, 1919 (Bengal Act V of 1919), read with rule 35 of the rules for the election and appointment of members of union boards, etc., Munshi Md. Azhar Ud-Din Biswas has been duly elected a member of the union board No. 7—Harihara in Sailkupa police-station in the Jhenidah subdivision of the district of Jessore, *vice* Munshi Kafil Ud-Din Biswas, deceased.

It is hereby notified for general information that, under section 13 of the Bengal Village Self-Government Act, 1919 (Bengal Act V of 1919), read with rule 35 of the rules for the election and appointment of members of union boards, etc., Babu Shyama Charan Biswas has been duly elected a member of the union board No. 8—Dhalahara-Chandra in Sailkupa police-station in the Jhenidah subdivision of the district of Jessore, *vice* Babu Khokan Chandra Kundu, deceased.

P. D. MARTYN, *District Magistrate.*

Khulna, the 17th April 1937.

Corrigendum.—*Read* "Maulvi Sukur Biswas" in place of "Maulvi Sukur Gazi" and "Maulvi Jinitulla Sana" in place of "Maulvi Dabiruddin Sardar" published at page 783, Part I of the *Calcutta Gazette*, dated the 1st April 1937, as appointed members of the Garaikhali union board.

Khulna, the 19th April 1937.

Corrigendum.—*Read* "Maulvi Mahiuddin Gazi" in place of "Maulvi Shaik Mahiuddin" published at page 783, Part I of the *Calcutta Gazette*, dated the 1st April 1937, as an appointed member of the Godaipur union board in police-station Paikgacha of the Sadar subdivision of the Khulna district.

B. SARKAR, *District Magistrate.*

Krishnagar, the 19th April 1937.

It is hereby notified for general information that, under sub-section (2) of section 6 of the Bengal Village Self-Government Act, 1919 (Bengal Act V of 1919), the following gentlemen have been duly elected to be members of the undermentioned union boards in police-station Meherpur in the Meherpur subdivision of the Nadia district:—

Buripota union board.

Ward No. I.

Muhammad Sabdar Ali Biswas.
Munshi Rofayetulla Biswas.

Ward No. II.

Munshi Fakir Muhammad Biswas.
Munshi Kasaraddin Mandal.

Ward No. III.

Babu Girija Kumar Mukherjee.
Babu Baidya Nath Ghose.

Govipur union board.

Ward No. I.

Babu Madhabendu Mohanta.
Munshi Jeher Ali Mandal.

Ward No. II.

Muhammad Khoda Baksha Biswas.
Babu Ronojoy Pande.

Ward No. III.

Babu Sanyasi Charan Dutt.
Muhammad Rahisaddin Mandal

Uzalpur union board.

Ward No. I.

Munshi Golebash Biswas.
Munshi Khoda Baksha Mandal.

Ward No. II.

Babu Bidhu Bhushan Biswas.
Babu Sudhir Kumar Biswas.

Ward No. III.

Babu Bhabani Charan Biswas.
Munshi Moyjaddin Biswas.

Shyampur union board.

Ward No. I.

Munshi Kalimaddin Shaikh.
Munshi Reajuddin Shaik.

Ward No. II.

Babu Satish Chandra Banerjee.
Munshi Arjan Ali Mandal.

Ward No. III.

Babu Surja Kanta Pal.
Munshi Rahim Baksha Shaik.

Baliarpur union board.

Ward No. I.

Babu Kala Chand Pal.
Muhammad Benwari Biswas.

Ward No. II.

Babu Damudar Joardar.
Muhammad Korban Shaik.

Ward No. III.

Muhammad Harejuddin Biswas.
Babu Hrishikesh Biswas.

Mahajanpur union board.

Ward No. I.

Babu Tarapada Biswas.
Babu Kumaresh Chakravarty.

Ward No. II.

Babu Nani Gopal Kundu.
Babu Tara Pada Pal.

Ward No. III.

Muhammad Katarali Biswas.
Muhmmad Nasaraddin Biswas.

Dariapur union board.

Ward No. I.

Babu Adhar Chandra Biswas.
Munshi Samsaddin Mandal.

Ward No. II.

Munshi Fakir Muhammad Biswas.
Munshi Abdul Jalil Mia.

Ward No. III.

Munshi Bholai Mandal.
Babu Manindra Nath Biswas.

It is hereby notified for general information that, under sub-section (2) of section 6 of the Bengal Village Self-Government Act, 1919 (Bengal Act V of 1919), the following gentlemen have been duly elected to be members of the undermentioned union boards in police-station Karimpur in the Meherpur subdivision of the Nadia district:—

Shikarpur union board.

Ward No. I.

Babu Devendra Nath Ganguly.
Munshi Akbar Biswas.

Ward No. II.

Mr. D. Somerville.
Babu Lakshmipati Chowdhury.

Ward No. III.

Muhammad Polad Mandal.
Babu Bibhuti Bhushan Chatterjee.

It is hereby notified for general information that, under sub-section (2) of section 6 of the Bengal Village Self-Government Act, 1919 (Bengal Act V of 1919), the following gentlemen have been duly elected to be members of the undermentioned union boards in police-station Tehatta in the Meherpur subdivision of the Nadia district:—

Gopinathpur union board.

Ward No. I.

Muhammad Khoda Baksha Mondal.
Muhammad Ataharali Biswas.

Ward No. II.

Babu Hrishikesh Biswas.
Babu Balaram Das Sahitya Bhusan.

Ward No. III.

Babu Harekrishna Biswas.
Muhammad Abdul Sovan Sheik.

Syamnagar union board.

Ward No. I.

Babu Dwijaraj Sarkar.
Babu Basanta Kumar Sarkar.

Ward No. II.

Babu Kalipada Ganguly.
Babu Bhupati Bhusan Mondal.

Ward No. III.

Munshi Habibulla Biswas
Babu Raj Ballav Laha.

Betai union board.

Ward No. I.

Muhammad Yakub Hossain Biswas.
Babu Gopal Das Bairagya.

Ward No. II.

Maulvi Sayed Zeaul Huq.
Babu Raj Krishna Biswas.

Ward No. III.

Munshi Abdur Rahaman Doctor.
Babu Manindra Mohon Singh Roy.

M. M. STUART, *District Magistrate.*

Alipore, the 22nd April 1937.

It is hereby notified for general information under rule 9 of the Bengal Legislative Assembly (Election Expenses and Election Petitions) Rules, 1936, that the candidate named below has filed his return of election expenses and declarations on the date and in respect of the constituency noted against his name—

Name of candidate.	Name of constituency of the Bengal Legislative Assembly.	Date on which the return of election expenses and declaration have been lodged.
Sreedhor Chandra Roy.	24-Parganas North-West Rural (General) Constituency.	19th April 1937.

The return can be inspected on any working day between the hours of 11 a.m. and 5 p.m. at the District Magistrate's office, Alipore, by any person on payment of a fee of Re. 1 only.

H. GRAHAM, *District Magistrate and Returning Officer.*

Orders by the Deputy Inspector-General of Police, Criminal Investigation Department.

Calcutta.—No. 4347R.—24th April 1937.—Sub-Inspector Ashutosh Das is appointed to act as Inspector with effect from 16-4-1937, a.m., *vice* Babu Jitendra Nath Sen, Inspector, granted leave.

C. E. S. FAIRWEATHER,
Deputy Inspector-General of Police.

Orders by the Deputy Inspector-General of Police, Presidency Range.

Calcutta.—No. 2435.—24th April 1937. — Maulvi Mir Obed Ali, Inspector, Nadia, is granted 2 months' leave on average pay, on medical certificate, in extension of the leave already granted to him.

The existing acting arrangement will continue.

R. M. WRIGHT,
Deputy Inspector-General of Police.

Rajshahi Division—Jalpaiguri.

No. 1690M. — 17th April 1937. — It is hereby notified for general information that under rule 20 (*b*) of the manual of rules for the management of charitable hospitals and dispensaries under the supervision of the Government of Bengal, the following gentlemen are appointed to be members of the committee for the management of the Siliguri dispensary in the district of Darjeeling:—

The Subdivisional Officer, Siliguri (*ex-officio*).

Khas Mahal Officer, Siliguri (*ex-officio*).

Assistant Surgeon, Siliguri (*ex-officio*).

Inspector of Police, Siliguri (*ex-officio*).

The District Health Officer, Siliguri (*ex-officio*).

President, Siliguri union board (*ex-officio*).

Rai Sahib S. N. Bhattacharji.

Maulvi Syed Muhammad.

Babu P. K. Basu.

Babu Lakshmi Narayan Mazumdar.

Babu Hanuman Prosad.

Babu Digendra Nath Roy Sarkar.

No. 1693M.—17th April 1937.—In partial modification of this office notification No. 4657-J.,dated the 11th December 1933, it is hereby notified for general information that under rule 20 (*b*) of the manual of rules for the management of charitable hospitals and

dispensaries under the supervision of the Government of Bengal, the following gentlemen are appointed to be members of the committee for the management of the Nator dispensary in the district of Rajshahi for the unexpired remainder of the term of the committee:—

Babu Tarak Nath Bhaduri,
Babu Subodh Chandra Sanyal,
Babu Harisaran Moitra,
Babu Sachindra Nath Moitra,
Maulvi Abdul Jabbar and
Maulvi Abdul Mallek Khan,

vice Babus Nabin Chandra Ray, Sachinandan Paul, Monoranjan Majumdar, Krishna Gopal Basak, Anath Bandhu Sarkar and Maulvi Md. Rowshan Khan Choudhury who have vacated their seats under rule 22 (*4*) of the dispensary rules.

No. 1720M.—19th April 1937.—In exercise of the powers delegated to me by Government notification No. 10108L.R., dated the 14th July 1936, I hereby appoint under section 3 (*2*) of the Bengal Agricultural Debtors Act, 1935 (Bengal Act VII of 1936), for a term of three years from 15th April 1937, the following persons to be Chairmen and members of the undermentioned Debt Settlement Boards established in the Sadar, Balurghat and Thakurgaon subdivisions of the Dinajpur district under Government notification Nos. 4879L.R., 4880L.R. and 4881L.R., dated the 3rd March 1937:—

Sadar subdivision.

Kalikapur Debt Settlement Board.

Babu Bancharam Rai, Chairman.

Members.

Munshi Jamiruddin Sha.
Munshi Gamiruddin Ahmed.
Babu Dharmanarayan Rai.
Munshi Sahebulla Saha.

Maharajpur Debt Settlement Board.

Babu Harendra Nath Rai, Chairman.

Members.

Munshi Bosaruddin Shaha.
Babu Upendra Nath Jhan.
Maulvi Jaheruddin Ahmed.
Munshi Sakul Sha.

Bishnupur Debt Settlement Board.

Maulvi Md. Abdul Ahad Khan, Chairman.

Members.

Babu Jatru Ram Rai.
Maulvi Gafuruddin Ahmed Chowdhury.
Munshi Chunu Md. Sarkar.
Babu Narattam Chandra Sha.

Ruhea Debt Settlement Board.

Maulvi Kasiruddin Ahmed, Chairman.

Members.

Munshi Samiruddin Choudhury.
Babu Shyama Charan Karmakar.
Munshi Tafseruddin Mia.
Munshi Faizuddin Ahamed.

Bairhatta Debt Settlement Board.

Munshi Samshuddin Sarker, Chairman.

Members.

Munshi Majibuddin Sarker.
Babu Haramohan Sarker.
Munshi Pali Md. Sarker.
Babu Madhu Sudan Sarker.

Illahabad Debt Settlement Board.

Munshi Wahed Ali Ahmed, Chairman.

Members.

Munshi Khaberuddin Ahmed.
Babu Gadadhar Shaha.
Babu Nibaran Chandra Sarker.
Munshi Ahmed Hossain.

Bagichapur Debt Settlement Board.

Dr. Haripada Saha, Chairman.

Members.

Babu Satis Chandra Das.
Munshi Mahar Rahaman Choudhury.
Munshi Fatu Md. Mandal.
Munshi Saidur Rahaman Choudhury.

Deul Debt Settlement Board.

Babu Jogendra Nath Guha Majumdar, Chairman.

Members.

Babu Hiralal Sarker.
Babu Rash Charan Sarker.
Babu Bhaja Gobinda Sarker.
Munshi Majaruddin Kabiraj.

Berail Debt Settlement Board.

Babu Debendra Nath Das, Chairman.

Members.

Munshi Masiruddin Sarker.
Munshi Asiruddin Sarker.
Babu Pares Nath Das.
Babu Bhuban Chandra Sarker.

Kamalpur Debt Settlement Board.

Maulvi Eusoff Ali Choudhury, Chairman.

Members.

Maulvi Rafiuddin Mia.
Babu Promoda Prosad Das.
Maulvi Safatulla Sarker.
Maulvi Faijuddin Sarker.

Chandipur Debt Settlement Board.

Maulvi Asrafuddin Pramanik, Chairman.

Members.

Babu Sarat Chandra Poddar.
Munshi Rahimuddin Pramanik.
Munshi Md. Soleman Pramanik.
Munshi Jarip Md. Pramanik.

Hamidpur Debt Settlement Board.

Dr. Abdul Hamid, Chairman.

Members.

Munshi Piaratulla Sarker.
Munshi Faratulla Sarker.
Munshi Jaheruddin Gachua.
Munshi Jamiruddin Mandal.

Dagarbari Debt Settlement Board.

Maulvi Nezamuddin Shah, Chairman.

Members.

Dr. Yasin Ali.
Maulvi Asgar Ali Ahmed.
Maulvi Harmuj Ali Ahmed.
Babu Syama Charan Kabiraj.

Abdulpur Debt Settlement Board.

Maulvi Tasiruddin Shah, Chairman.

Members.

Munshi Mafizuddin Sarker.
Maulvi Atikar Rahaman.
Munshi Abdul Gafur Shah.
Babu Lakshi Kanta Rai.

Bheail Debt Settlement Board.

Babu Rajendra Narayan Rai Choudhury, Chairman.

Members.

Babu Mahesh Chandra Rai Mandal.
Munshi Fazar Md. Shah.
Dr. Nripa Chandra Rai.
Babu Ramani Mohan Banerji.

Bulakipur Debt Settlement Board.

Maulvi Samsherali Sarker, Chairman.

Members.

Maulvi Mahatabuddin Sarker.
Babu Sibnath Sarker.
Munshi Ajimuddin Sarker.
Munshi Md. Askar Ali Fakir.

Ramnathpur Debt Settlement Board.

Maulvi Md. Kasiruddin Sarker, Chairman.

Members.

Babu Lalit Mohan Sarker.
Haji Baharuddin.
Munshi Md. Amiruddin Mandal.
Munshi Md. Nasaruddin Mandal.

Boaldar Debt Settlement Board.

Maulvi Haji Moshraf Ali Khan, Chairman.

Members.

Maulvi Haji Kudratulla.
Babu Mahesh Chandra Kabiraj.
Munshi Abdul Sarder.
Munshi Asraf Ali Sarker.

Kamalabari Debt Settlement Board.

Samshuddin Ahmed Choudhury, Chairman.

Members.

Khelaram Mandal.
Haji Nadar Ali.
Babu Rajkumar Sarker.
Asan Ali Sarker.

Radhikapur Debt Settlement Board.

Maulvi Samiruddin Sarker, Chairman.

Members.

Babu Satis Chandra Das.
Banatulla Kabiraj.
Babu Srish Chandra Mandal.
Mafijuddin Ahmed.

Bochadanga Debt Settlement Board.

Babu Sanat Kumar Pattadar, Chairman.

Members.

Babu Jatindra Nath Pramanik.
Maulvi Jyiti Md. Sarker.
Babu Charan Sarker.
Babu Braja Mohon Mandal.

Gulandar Debt Settlement Board.

Babu Sudhansu Bhusan Rai, Chairman.

Members.

Babu Ramani Kanta Tarafdar.
Babu Mukunda Chandra Saha.
Babu Dhirendra Kumar Banerjee.
Badul Md. Sarker.

Kapassia Debt Settlement Board.

Maulvi Tamijuddin Ahmed, Chairman.

Members.

Babu Manmatha Nath Bhattacharji.
Babu Prasanna Kumar Guha.
Maulvi Tamijuddin Biswas.
Maulvi Basiruddin Munshi.

Saidpur Debt Settlement Board.

Maulvi Habibar Rahaman, Chairman.

Members.

Safiluddin Ahmed.
Md. Ismail Hossain.
Yeur Md. Sarker.
Samshuddin Sarker.

Naoda Debt Settlement Board.

Babu Mahendra Nath Sarker, Chairman.

Members.

Babu Ghanesyam Das Sarker.
Panolla Sarker.
Resaluddin Choudhury.
Babu Haralal Sarker.

Gouri Debt Settlement Board.

Babu Dinabandhu Das, Chairman.

Members.

Babu Gour Mohan Das.
Tomijuddin Sarker.
Hafijuddin Ahmed.
Babu Subal Chandra Sarker.

Thakurgaon subdivision.

Khongaon Debt Settlement Board.

Babu Bhabani Prasad Roy, Chairman.

Members.

Babu Bhabakram Roy.
Munshi Dharmu Mahammad Sarker.
Babu Gagan Chandra Barma.
Munshi Ekbar Ali Sarker.

Kosharaniganj Debt Settlement Board.

Babu Chandra Mohan Chakravarty, Chairman.

Members.

Babu Uma Charan Chakravarty.
Maulvi Bhuban Ali Sarker.
Maulvi Abdul Baset.
Maulvi Bharani Sarker.

Daulatpur Debt Settlement Board.

Babu Jadav Chandra Saha, Chairman.

Members.

Babu Sashi Bhusan Roy.
Munshi Asiruddin Sarker.
Munshi Darmian Ali Sarker.
Babu Monindra Nath Dutta.

Nafanagar Debt Settlement Board.

Babu Jogesh Chandra Ray, Chairman.

Members.

Mohammad Khoka Mia.
Babu Indra Mohan Ray.
Babu Abala Kanta Ray.
Munshi Bhuban Ali Sarker.

Chandpur Debt Settlement Board.

Babu Murari Mohan Das, Chairman.

Members.

Babu Rup Kanta Sarker.
Munshi Mushed Ali Sarker.
Babu Bhola Nath Das.
Munshi Munser Ali Sarker.

Chhatoil Debt Settlement Board.

Munshi Tasiruddin Sarker, Chairman.

Members.

Munshi Masiruddin Sarker.
Babu Abinash Chandra Choudhury.
Munshi Jamiruddin Ahmed.
Babu Purna Chandra Choudhury.

Khamarpara Debt Settlement Board.

Munshi Imaratulla Sarker, Chairman.

Members.

Munshi Janab Hossain Choudhury.
Babu Krishna Charan Barma Saha.
Babu Kartik Chandra Saha.
Munshi Pasaratuddin Sarker.

Pirganj Debt Settlement Board.

Maulvi Khadem Matiar Rahaman, Chairman.

Members.

Maulvi Mohammad Khoyrat Ali.
Maulvi Dil Mahammad Sarker.
Babu Lalit Mohan Barma.
Maulvi Golam Eusuf.

Ishania Debt Settlement Board.

Maulvi Easan Ali, Chairman.

Members.

Babu Madhusudan Ray.
Babu Debendra Nath Sarker.
Haji Khejmat Ali Sarker.
Babu Kali Kumar Barma.

Balurghat subdivision.

Harsura Debt Settlement Board.

Munshi Sukar Mahammed Sarkar, Chairman.

Members.

Munshi Bora Sarker.
Munshi Jeheruddin Kazi.
Munshi Gandhu Md. Sarkar.
Babu Madan Mohan Adhikary.

Dipkhanda Debt Settlement Board.

Maulvi Saijuddin Choudhury, Chairman.

Members.

Maulvi Basiruddin Choudhury.
Munshi Banij Md. Sarker.
Munshi Tajer Mahammad Kazi.
Munshi Azizar Rahaman.

Ramchandrapur Debt Settlement Board.

Babu Bana Behari Acherjee, Chairman.

Members.

Babu Jadav Lal Ghose.
Babu Durga Charan Ghose.
Munshi Farajali Mir.
Munshi Md. Isa Pandit.

Autina Debt Settlement Board.

Munshi Jamirali Khondakar, Chairman.

Members.

Munshi Sahiruddin.
Babu Satish Chandra Sidhanta.
Babu Srishtidhar Mandal.
Munshi Sukur Md. Mandal.

Malancha Debt Settlement Board.

Babu Radha Kanta Mandal, Chairman.

Members.

Munshi Abdul Gafur Mandal.
Munshi Atabuddin Choudhury.
Munshi Emdad Hossain Mandal.
Munshi Uma Kanta Mandal.

Gofanagar Debt Settlement Board.

Babu Kali Kumar Choudhury, Chairman.

Members.

Munshi Khorsed Md. Mandal.
Babu Rameswar Samajdhar.
Munshi Yar Md. Mandal.
Babu Umesh Chandra Choudhury.

Pathari Debt Settlement Board.

Munshi Wahedali Chaudhury, Chairman.

Members.

Munshi Asimuddin Choudhury.
Munshi Khayertulla Sarkar.
Munshi Gayesh Md. Choudhury.
Babu Janaki Nath Sarkar.

Ghatnagar Debt Settlement Board.

Munshi Ful Md. Moll, Chairman.

Members.

Munshi Safiuddin Sarkar.
Munshi Nasiruddin Sardar.
Munshi Tajarulla Mandal.
Babu Dina Bandhu Kar.

Mashidpur Debt Settlement Board.

Munshi Shah Samsuddin Ahmed Choudhury, Chairman.

Members.

Munshi Badar Hossain Shah.
Babu Rajani Kanta Shaha.
Munshi Nali Md. Molla.
Babu Krishnendra Narayan Shaha.

Hajratpur Debt Settlement Board.

Babu Radha Kison Therani, Chairman.

Members.

Babu Lakshman Chandra Das.
Munshi Khusi Mahammad Sarkar.
Munshi Basiruddin Sarkar.
Munshi Darajtulla Mandal.

Nithpur Debt Settlement Board.

Babu Sarat Chandra Banerjee, Chairman.

Members.

Babu Ram Ratan Prasad Bhakat.
Babu Kishori Prasad Bhakat.
Dewan Shamasuddin Ahmed.
Munshi Abdul Aziz Shah Choudhury.

Bhaur Debt Settlement Board.

Munshi Atabuddin Choudhury, Chairman.

Members.

Babu Kishori Mohan Kundu.
Munshi Natu Md. Mandal.
Munshi Abdul Sobhan Molla.
Munshi Yakubali Mian.

Batul Debt Settlement Board.

Babu Gopeswar Ghosh, Chairman.

Members.

Babu Sashi Bhusan Ghosh.
Munshi Bakshi Mandal.
Munshi Farajali Fakir.
Babu Sachindra Kumar Mukherjee.

Ramkrishnapur Debt Settlement Board.

Munshi Umeruddin Choudhury, Chairman.

Members.

Munshi Keamuddin Mandal.
Munshi Hafijuddin Sarkar.
Babu Rajani Mohan Majumdar.
Babu Srish Chandra Bhattacharjee.

Nandanpur Debt Settlement Board.

Babu Satish Chandra Das, Chairman.

Members.

Maulvi Samiruddin Choudhury.
Maulvi Asiruddin Choudhury.
Munshi Sabur Mahammad.
Babu Trailakhya Nath Sarkar.

Isabpur Debt Settlement Board.

Munshi Saibuddin Mandal, Chairman.

Members.

Gajimuddin Sardar.
Babu Kamini Kanta Goswami.
Munshi Duparia Sardar.
Munshi Kutubuddin Mandal.

Agradigun Debt Settlement Board.

Haji Kasimuddin, Chairman.

Members.

Babu Abhoy Charan Barma.
Babu Haladhar Barma.
Munshi Jamiruddin Mandal.
Haji Natu Md. Mandal.

Alampur Debt Settlement Board.

Munshi Multan Sarkar, Chairman.

Members.

Munshi Safiuddin Sarkar.
Babu Mahima Ranjan Adhikary.
Munshi Baharuddin Mandal.
Munshi Bayenuddin Fakir.

Dharmoirhat Debt Settlement Board.

Munshi Aijanali Mandal, Chairman.

Members.

Munshi Osmanali Dewan.
Babu Shew Perjan Ram Bhakat.
Munshi Maniruddin Mandal.
Munshi Arajtulla Mandal.

Ghoshnagar Debt Settlement Board.

Munshi Abdul Karim Choudhury, Chairman.

Members.

Munshi Asgarali Mandal.
Munshi Nururuddin Mandal.
Munshi Samserali Mandal.
Munshi Mafizuddin Mandal.

Amair Debt Settlement Board.

Babu Ghamkai Nath Mahanta, Chairman.

Members.

Babu Shyama Charan Das.
Munshi Rahimulla Mandal.
Munshi Abdulaziz Siddique.
Babu Basanta Kumar Bhattacharjee.

Jotebani Debt Settlement Board.

Munshi Danij Mahammad Mandal, Chairman.

Members.

Babu Monmohan Choudhury.
Munshi Najaruddin Choudhury.
Babu Kali Prasanna Choudhury.
Munshi Md. Dil Md. Mandal.

Khotta Madhabpara Debt Settlement Board.

Munshi Sakarali Biswas, Chairman.

Members.

Babu Priya Nath Ghose.
Munshi Basiruddin Sarkar.
Munshi Mafizuddin Sarkar.
Babu Baidya Nath Sarkar.

Matendar Debt Settlement Board.

Babu Bibhuti Bhusan Sidhanta, Chairman.

Members.

Munshi Kamaruddin Mandal.
Babu Nadiar Chand Barman.
Munshi Md. Manglu Mandal.
Babu Rasharaj Barman.

Rudrani Debt Settlement Board.

Munshi Soleman Hossen, Chairman.

Members.

Munshi Khajiruddin Ahmed.
Munshi Sadaruddin Kazi.
Munshi Safiruddin Mandal.
Munshi Oliulla Sarkar.

Kajial Debt Settlement Board.

Munshi Sadaruddin Sarkar, Chairman.

Members.

Munshi Kasiruddin Sarkar.
Munshi Asaruddin Sarkar.
Munshi Zinu Mahammad Mandal.
Munshi Kasimuddin Sarkar.

Raninagar Debt Settlement Board.

Munshi Basiruddin Mandal, Chairman.

Members.

Munshi Basiruddin Mandal.
Munshi Sajibulla Mandal.
Munshi Kaseruddin Mandal.
Babu Anath Bandhu Mandal.

Betdighi Debt Settlement Board.

Munshi Saberuddin Sarkar, Chairman.

Members.

Munshi Kasiruddin Sarkar.
Munshi Abdul Gafur Shah.
Munshi Rajatulla Mandal.
Munshi Ofiruddin Mandal.

Rahimapurganj Debt Settlement Board.

Babu Krishna Lal Ghosh, Chairman.

Members.

Babu Ramendra Nath Mukherjee.
Munshi Khajir Md. Mandal.
Munshi Bahadurali Mandal.
Munshi Sharitulla Mandal.

Gopalbati Debt Settlement Board.

Munshi Joytulla Mandal, Chairman.

Members.

Munshi Rafitulla Mandal.
Munshi Ahab Ali Sarkar.
Babu Prabash Chandra Saha.
Babu Hira Lal Laha.

Dhalpara Debt Settlement Board.

Munshi Safiuddin Sonar, Chairman.

Members.

Munshi Sahebtulla Choudhury.
Munshi Rahim Baksha Mandal.
Munshi Jan Baksha Mandal.
Munshi Samijuddin Mandal.

Binshira Debt Settlement Board.

Babu Baidya Nath Laha, Chairman.

Members.

Babu Tinkari Shaha.
Munshi Ashrafuddin Sardar.
Pastor Jalpa Soren.
Munshi Ahmed Hossain Mandal.

No. 1723M.—19th April 1937.—It is hereby notified for general information that at the general election held on the 24th March 1937, the following gentlemen were duly elected to be Commissioners of the Gaibandha Municipality in the district of Rangpur:—

Ward I.

Babu Devendra Nath Ray, B.L.
Babu Profulla Kumar Biswas.
Dr. Hafizar Rahman, M.B.

Ward II.

Babu Nibaran Chandra Kar.
Babu Bhabani Mohan Deb, B.L.
Maulvi Adalat Ali Khan.

Ward III.

Maulvi Meher Uddin Ahamed.
Babu Guna Mohan Das, M.A., B.L.

Ward IV.

Maulvi Abdur Rahman.

No. 1798M.—22nd April 1937.—In exercise of the power conferred on me by section 25 of the Local Self-Government Act, III of 1885, as amended by Act V (B. C.) of 1908, I approve of the election by the members of the West Bogra local board in the district of Bogra of Dr. Kasiruddin Talukdar to be their Chairman.

No. 1801M.—22nd April 1937.—In exercise of the power conferred on me by section 25 of the Local Self-Government Act, III of 1885, as amended by Act V (B. C.) of 1908, I approve of the election by the members of the East Bogra local board in the district of Bogra of Maulvi Kabezuddin Ahmed to be their Chairman.

No. 1314J. — 24th April 1937. — Babu Sudhir Chandra Maitra, Sub-Deputy Collector and Circle Officer, Nator, is transferred to Naogaon in the district of Rajshahi to work as Circle Officer, East Circle.

The transfer is made in the public interest.

L. R. FAWCUS, *Commissioner (offg.)*.

Malda, the 17th February 1937.

Under rule 32A of the Election Rules under the Local Self-Government Act, it is notified for general information that the 17th May 1937 has been fixed for the by-election of a member for the Malda local board from thana Kharba to fill up the vacancy caused by the removal of Rai Sahib Kamala Kanta Bagchi under section 18(*1*)(*c*) of the Local Self-Government Act.

B. R. SEN, *District Magistrate.*

Dinajpur, the 19th April 1937.

No. 2435J.—It is hereby notified for general information that, under section 13 of the Bengal Village Self-Government Act, 1919 (Bengal Act V of 1919), Munshi Kalu Muhammad Sarker of Dadhikote, police-station Hemtabad, has been duly appointed to be a member of the Bangalbari union board of police-station Hemtabad within the jurisdiction of the Sadar subdivision of the district of Dinajpur in place of Maulvi Didar Ali Sarker, resigned.

No. 2436J.—It is hereby notified for general information that, under section 13 of the Bengal Village Self-Government Act, 1919 (Bengal Act V of 1919), Munshi Abdus Samad Sardar of Khalilpur, police-station Parbatipur, has been duly elected to be a member of the Hamidpur union board of police-station Parbatipur within the jurisdiction of the Sadar subdivision of the district of Dinajpur in place of Munshi Sefailuddin Sardar, deceased.

Dinajpur, the 21st April 1937.

No. 2521J.—It is hereby notified for general information that, under rule 3 of the rules for the managing committees of Government High Schools at page 199, section V of the Bengal Education Code, 1931, the following gentlemen have been appointed to be members of the managing committee of the Dinajpur Zilla School:—

District Magistrate, Dinajpur—*Ex-officio*—President.
Head Master, Dinajpur Zilla School—*Ex-officio* Vice-President and Secretary.
Maulvi Belaluddin Ahmed, Assistant Head Master, Dinajpur Zilla School—Teachers' representative.
Babu Jogindra Chandra Chakraverty—Representative of parents and guardians.
Maulvi Kader Buksh—Representative of parents and guardians.
Sadar Subdivisional Magistrate, Dinajpur—*Ex-officio* Official member.

M. K. KIRPALANI, *District Magistrate.*

Bogra, the 21st April 1937.

No. 2506J. — It is hereby notified for general information that, under section 13 of the Bengal Village Self-Government Act, 1919 (Bengal Act V of 1919), read with rule 35 of the rules for the election and appointment of members of union boards, etc., the following gentlemen have been duly elected to be members of Ward No. 3 of Punat union board in police-station Khetlal, district Bogra:—

Maulvi Abbas Ali Mandol, B.A.,
Maulvi Umiruddin Mridha,

vice

Munshi Abdul Wahed Khondkar,
Munshi Abbas Ali Talukdar,

resigned.

T. I. M. NURANNABI CHAUDHURI,
District Magistrate.

Kurigram, the 20th April 1937.

Under rule 9 of the Bengal Legislative Assembly and Bengal Legislative Council Electoral (Election Expenses and Election Petitions) Rules, 1936, it is hereby notified for the information of all those concerned that the return of election expenses under rule 7 (2) of the aforesaid rules was filed before me on the 20th April 1937 by Maulvi Ashraf Uddin Sarkar, a candidate from the Kurigaon South (Rural) Muhammadan Constituency of the Bengal Legislative Assembly. The return has been received at 11 a.m. to-day, the 20th April 1937.

The return can be inspected on any working day between the hours of 11 a.m. and 5 p.m. at my office by any person on payment of a fee of Re. 1 only and attested copy of the return or any part thereof can be obtained on payment of a fee of Rs. 2 only.

A. K. BOSE, *Subdivisional Officer and Returning Officer.*

Malda, the 23rd April 1937.

It is notified for general information under rule 9 of the Bengal Legislative Assembly and Bengal Legislative Council Electoral (Election Expenses and Election Petitions) Rules, 1936, that Abul Hyat Khan Choudhury (Khan Bahadur), an unsuccessful candidate from the Malda North Muhammadan Constituency, has lodged with me his return of election expenses and the declarations on the 6th April 1937, under rule 7 (2) of the aforesaid rules.

They may be inspected in the office of the District Magistrate, Malda, on office days during office hours on payment of the prescribed fee of Re. 1 only and attested copy of the same or any part thereof may be had on payment of a fee of Rs. 2 for each copy.

M. AHMED, for *Returning Officer.*

Orders by the Deputy Inspector-General of Police, Rajshahi Range.

Jalpaiguri.—No. 2996.—23rd April 1937.—Babu Pulin Bihari Mukharji, Inspector, P. T. College, Sardah, is granted 4 months' leave on average pay, under rule 81 (*b*) (*ii*) of the Fundamental Rules, with effect from the date on which he may avail himself of it.

2. With effect from the date of assuming charge, Sub-Inspector Hari Charan Sen of the P. T. College, Sardah, is appointed to act as Inspector, *vice* Babu Pulin Bihari Mukharji, Inspector, proceeding on leave.

H. C. HUNT,

Deputy Inspector-General of Police (offg.).

Registered No. C 207

The Calcutta Gazette

THURSDAY, APRIL 29, 1937.

PART IA

Orders and Notifications by the Government of India republished for general information.

LEGISLATIVE DEPARTMENT.

NOTIFICATIONS.

New Delhi, the 25th March, 1937.

No. F.-102/37-C. & G.—In pursuance of the provisions of sub-rule (2) of rule 26 of the Legislative Assembly Electoral Rules, the Governor General is pleased to nominate Mr. John Bartley, C.I.E., being an official, to be a Member of the said Legislative Assembly.

No. F.-102/37-C. & G.—In pursuance of the provisions of sub-rule (2) of rule 26 of the Legislative Assembly Electoral Rules, the Governor General is pleased to nominate Mr. Satyendra Nath Roy, C.I.E., being an official, to be a Member of the said Legislative Assembly.

The 30th March 1937.

No. F.-131/37-C. & G.—The Governor General is pleased to accept the resignation by Mr. A. K. Fazlul Huq of his office of Member of the Legislative Assembly.

The 1st April 1937.

No. F.-102/37-C. & G.—The Governor General is pleased to accept the resignation by Mr. J. Bartley, C.I.E., of his office of Member of the Legislative Assembly.

G. H. SPENCE,
Secy. to the Govt. of India.

The 13th April 1937.

No. F.-135/37-C. & G.—The following notification by His Excellency the Viceroy and Governor General dated the 10th April, 1937, is published for general information:—

"In exercise of the powers conferred by sub-section (2) of section 63D of the Government of India Act, as set out in the Ninth Schedule to the Government of India Act, 1935, I, Victor Alexander John, Marquess of Linlithgow, hereby prorogue the session of the Council of State.

LINLITHGOW,
Viceroy and Governor General.

NEW DELHI;
The 10th April 1937."

G. H. SPENCE,
Secy. to the Govt. of India.

CORRIGENDA.

1. On page 362 of the *Gazette of India Extraordinary*, dated the 1st April, 1937, in Legislative Department Notification No. F.-344/36-C. & G. (I), dated the 1st April, 1937, in part (a) of item No. 6 (1), *for* the words, brackets and letters "clauses (c) to (h) shall be re-lettered (b) to (g);" *read* "clauses (c) and (d) shall be re-lettered (b) and (c);".

2. On page 366 of the *Gazette of India Extraordinary*, dated the 1st April, 1937, in Legislative Department Notification No. F. 344/36-C. & G. (II), dated the 1st April, 1937, in part (a) of item 6 (1), *for* the words, brackets and letters "clauses (c) (h) shall be re-lettered (b) to (g);" *read* "clauses (c) and (d) shall be re-lettered (b) and (c);".

* * * * * *

G. H. SPENCE,
Secy. to the Govt. of India.

LEGISLATIVE ASSEMBLY DEPARTMENT.

NOTIFICATION.

New Delhi, the 12th April 1937.

No. F.-43-I./37-A.—The following notification by His Excellency the Viceroy and Governor General, dated the 9th April, 1937, is published for general information:—

"In exercise of the powers conferred by sub-section (2) of section 63D as set out in the Ninth Schedule to the Government of India Act, 1935, I, Victor Alexander John, Marquess of Linlithgow, hereby prorogue the session of the Legislative Assembly.

LINLITHGOW,
Viceroy and Governor General.

The 9th April 1937."

MD. RAFI,
Secy. to the Govt. of India.

OFFICE OF THE SECRETARY TO THE GOVERNOR-GENERAL.

NOTIFICATION.

New Delhi, the 14th April 1937.

No. F.-25/37-Judicial (G.).—Under the provisions of sub-section (2) of section 222 of the Government of India Act, 1935, the Governor-General is pleased to appoint Mr. N. G. A. Edgley, I.C.S., Judicial Secretary and Legal Remembrancer to the Government of Bengal, to act as a Judge of the High Court at Calcutta during the absence on leave of the Honourable Mr. Justice Bartley.

R. M. MAXWELL,
Secy. to the Governor-General.

RAILWAY DEPARTMENT.

(RAILWAY BOARD.)

NOTIFICATION.

New Delhi, the 12th April 1937.

No. E.-37-R. B.-15 (2)-II.—Mr. B. M. Staig, C.S.I., I.C.S., Officer on special duty in the Finance Department, is appointed Financial Commissioner, Railways, with effect from the 9th April 1937.

B. MOODY,
Secretary, Railway Board.

HOME DEPARTMENT.

NOTIFICATIONS.

New Delhi, the 31st March 1937.

No. F. 35/24/36.—The undermentioned gentlemen who have been appointed to the Indian Civil Service are allotted to the provinces as follows:—

* * * *

Bengal.

B. K. Acharya.
H. P. Goodwyn.
T. A. Menon.
Aga Hilaly.

* * * *

No. F. 366/35.—The following resolution passed by the Secretary of State in Council is published for general information:—

In exercise of the powers conferred by sub-section (2) of section 96-B of the Government of India Act, the Secretary of State with the concurrence of a majority of votes at a meeting of the Council of India held this 16th day of March 1937, hereby makes the following amendments to the Premature Retirement Rules, namely—

1. In Rule 2(1) after the words "Provided that" the following words shall be inserted, namely, "no officer shall be eligible to retire under these rules who is certified to be physically unfit for further service in India, and that".
2. In Rule 9 (4) for the words "the initial pay which he might have received under Rule 51 of the Fundamental Rules if his new employment had been on deputation from India" the following shall be substituted, namely, "three-quarters of the pay of which he was in receipt when last on duty in India prior to retirement under these rules".

POLICE.

The 6th April 1937.

No. F. 132/4/36.—Mr. P. E. S. Finney, O.B.E., I.P., Bengal, is appointed as Officer in Charge of the Police Contingent attending the Coronation of His Majesty the King Emperor in London in May 1937, with effect from the date on which he assumed charge of his duties.

PUBLIC.

The 7th April 1937.

No. F.-188/36.—The Hon'ble Mr. A. deC. Williams, I.C.S., is confirmed as Secretary to the Executive Council of the Governor-General, in addition to his duties as Additional Joint Secretary in the Legislative Department, with effect from the 26th March 1937.

ESTABLISHMENTS.

The 8th April 1937.

No. F.-322/II/35.—The following resolution passed by the Secretary of State in Council is published for general information:—

In the exercise of the powers conferred by sub-section (3) of section 266 of the Government of India Act, 1935, and by clause 14 (2) of the Government of India (Commencement and Transitory Provisions) Order, 1936, the Secretary of State, with the concurrence of a majority of votes at a meeting of the Council of India held this 23rd day of March 1937, hereby makes the following regulations which shall have effect from 1st April 1937, namely:—

1. These Regulations may be called the Federal Public Service Commission (Consultation by the Secretary of State) Regulations.

2. It shall not be necessary for the Secretary of State to consult the Commission in regard to the selection for any appointment which falls to be made by him.

3. It shall not be necessary for the Governor General to consult the Commission in respect of officers appointed by the Secretary of State in regard to—

(i) any matter mentioned in clauses (a) and (b) of sub-section (3) of section 266 of the Government of India Act, 1935;

(ii) any matter mentioned in clause (c) of the said sub-section other than—

(1) a recommendation for removal or dismissal; and

(2) an appeal made in accordance with the provisions governing appeals for the time being in force if the Commission had not been previously consulted when the original order was passed against which the appeal is made;

unless the Secretary of State considers such consultation desirable.

4. It shall not be necessary for the Secretary of State to consult the Commission in regard to any matter mentioned in clauses (a), (b), (c), (d) and (e) of sub-section (3) of section 266 of the Government of India Act, 1935, which falls to be decided by him in any case in which the Governor General has at any previous stage obtained the advice of the Commission as to the orders to be passed or in which the Secretary of State does not consider that such consultation would serve any useful purpose.

5. It shall not be necessary for the Secretary of State or any authority in India to consult any Public Service Commission in India other than the Federal Public Service Commission in any case relating to an officer appointed by the Secretary of State or to an officer holding a Commission in His Majesty's Forces.

R. M. MAXWELL,

Secy. to the Govt. of India.

JUDICIAL.

The 29th March 1937.

No. F. 25/5/37.—The Honourable Mr. Justice Bartley, a Judge of the High Court of Judicature at Fort William in Bengal, is granted leave on half allowances from the 30th April to the 26th August 1937, both days inclusive.

The 12th April 1937.

No. F. 59/37.—The following resolution by the Secretary of State for India in Council is published for general information:—

In exercise of the powers conferred by sub-section (1) of section 104 of the Government of India Act, the Secretary of State for India in Council, at a meeting held this 16th day of March 1937, hereby makes the following amendment in the High Court Judges (India) Rules, 1922, namely:—

After Rule 25A, the following Rule shall be inserted:—

"25-AA. The Secretary of State may, for special reasons, direct that any period not exceeding three months shall be added to a Judge's service for pension."

JAILS.

The 8th April 1937.

No. F. 29/23/36.—The services of Captain S. Annaswami, I.M.S., are temporarily placed at the disposal of the Government of Bengal for employment in the Jail Department, with effect from the date on which he assumes charge of his duties.

J. A. THORNE,

Joint Secy. to the Govt. of India.

FINANCE DEPARTMENT.

NOTIFICATION.

New Delhi, the 15th April 1937.

No. D./1433-Ref./37. — The services of Sir P. Raghavendra Rau, an officer of the Indian Audit and Accounts Service, have been replaced at the disposal of the Auditor General of India with effect from the 9th of April 1937.

On the termination of his special duty under the Finance Department, Government of India, the services of Mr. B. M. Staig, C.S.I., I.C.S., have been placed at the disposal of the Railway Department (Railway Board) with effect from the 9th of April 1937.

J. C. NIXON,

Secy. to the Govt. of India.

FINANCE DEPARTMENT (CENTRAL REVENUES).

NOTIFICATIONS.

CUSTOMS.

New Delhi, the 17th April 1937.

No. 26.—In exercise of the powers conferred by section 13 of the Sea Customs Act, 1878 (VIII of 1878), the Governor General in Council is pleased to direct that the following amendment shall be made in the notification of the Government of India in the Finance Department (Central Revenues), No. 4-X-Customs, dated the 1st April 1937, namely:—

For the proviso to the said notification the following proviso shall be substituted, namely:—

"Provided that:—

(i) spirit,

(ii) goods produced or manufactured in Burma which are similar to goods on which an excise duty is leviable if produced or manufactured in British India, and

(iii) goods on which the duty leviable on importation into British India is higher than the duty leviable in Burma on such goods on importation into Burma, to the extent of the difference between the said duties,

shall not be so treated for the purpose of clause (*a*) of section 20 of the said Act."

No. 27.—In exercise of the power conferred by the first proviso to Item No. 74(2) of the First Schedule to the Indian Tariff Act, 1934 (XXXII of 1934), the Central Government are pleased to declare that the Raipur Forest Tramway (Kurud-Likma Light Railway) shall be deemed to be included in that item.

A. H. LLOYD,

Joint Secy. to the Govt. of India.

DEPARTMENT OF COMMERCE.

NOTIFICATIONS.

PORTS.

New Delhi, the 17th April 1937.

No. 9-P.(4)/37.—In pursuance of section 6 of the Calcutta Port Act, 1890 (Bengal Act III of 1890), it is hereby notified that under the provisions of section 15 of the said Act Mr. Balfour Smith has been elected by the Bengal Chamber of Commerce to be a Commissioner for the port of Calcutta, with effect from the 1st April 1937, *vice* Mr. G. W. Leeson.

No. 9-P.(5)/37.—In pursuance of section 6 of the Calcutta Port Act, 1890 (Bengal Act III of 1890), it is hereby notified that Sir George Campbell has been elected by the Bengal Chamber of Commerce to be a Commissioner for the port of Calcutta, *vice* Mr. A. O. Brown, resigned.

M. SLADE,

Joint Secy. to the Govt. of India (offg.).

TREATIES (CESS).

The 17th April 1937.

No. 477(5)-Tr.(I.E.R.).—In exercise of the powers conferred by sub-section (*3*) of section 4 of the Indian Tea Cess Act, 1903 (IX of 1903), the Central Government has been pleased, on the recommendation of the Indian Tea Association, to appoint Mr. P. J. Griffiths to fill the vacancy on the Indian Tea Market Expansion Board caused by the resignation of Mr. H. A. Antrobus.

H. DOW,

Secy. to the Govt. of India.

DEPARTMENT OF INDUSTRIES AND LABOUR.

NOTIFICATIONS.

New Delhi, the 12th April 1937.

No. A.-75.—The following draft of a certain amendment to the Indian Patents and Designs Rules, 1933, which it is proposed to make in exercise of the powers conferred by sub-section (1) of section 77 of the Indian Patents and Designs Act, 1911 (II of 1911), is published as required by sub-section (2) of section 77 of the said Act for the information of all persons likely to be affected thereby and notice is hereby given that the said draft will be taken into consideration on or after the 15th May 1937.

Any objection or suggestion which may be received from any person with respect to the draft before the said date will be considered by the Central Government:—

Draft amendment.

In the Third Schedule to the said Rules, for the words and brackets "British India (including British Baluchistan, the Santhal Parganas and the Shan States)" the words "British India and British Burma" shall be substituted.

The 14th April 1937.

No. Eccl.-93.—The Most Reverend Foss Westcott, M.A., D.D., Lord Bishop of Calcutta and Metropolitan in India, Burma and the Island of Ceylon, is granted furlough for three months, with effect from the 22nd April 1937.

A. G. CLOW,

Secy. to the Govt. of India.

DEPARTMENT OF EDUCATION, HEALTH AND LANDS.

NOTIFICATION.

ARCHÆOLOGY.

New Delhi, the 15th April 1937.

No. F.-34-11/37-F.—The following draft of certain amendments to the rules published with the notification of the Government of India in the Department of Education, Health and Lands, No. F.-41-1/33, dated the 13th September 1934, which it is proposed to make in exercise of the powers conferred by sub-section (*1*) of section 20B of the Ancient Monuments Preservation Act, 1904 (VII of 1904), are published as required by sub-section (*2*) of the said section for the information of all persons likely to be affected thereby, and notice is hereby given that the said draft will be taken into consideration on or after the 15th July 1937.

Any objection or suggestion which may be received from any person in respect of the draft before the said date will be considered by the Central Government.

Draft Amendments.

(*i*) For rule 2 of the said rules, the following rule shall be substituted, namely:—

"2. Before the Central Government declare an area protected, they shall cause a notice of intended declaration to be published in the official Gazette or in such other manner as they may deem fit and the Collector shall cause public notice of such notification to be given at convenient places on or near the area in question. Such notice shall specify the boundaries of the area and shall invite any person who objects to the proposed declaration to forward to the Collector a statement of the grounds of such objection within one month of the date on which the notice is exhibited. Any objection received in pursuance of this invitation shall be transmitted to the Central Government with the observations of the Collector and shall be taken into consideration by the Central Government before they decide whether to make the proposed declaration."

(*ii*) In rule 3 of the said rules—

(*a*) for the words "other than Government" the words "other than the Crown" and for the words "Local Government" the words "Provincial Government" shall be substituted; and

(*b*) for the words "Governor General in Council" in both places where they occur, the words "Central Government" shall be substituted.

(*iii*) In rule 6 of the said rules for the words "Governor General in Council" in both places where they occur, the words "Central Government" shall be substituted.

(*iv*) In rule 7 of the said rules for the word "Government" the words "the Central Government" and for the words "Governor General in Council" the words "Central Government" shall be substituted.

(*v*) In rule 8 of the said rules for the words "Governor General in Council" the words "Central Government" and for the word "Government" in both places where it occurs, the words "the Central Government" shall be substituted.

(*vi*) In condition (7) of rule 11 of the said rules, for the words "shall be carried out by Government" the words "may be carried out by the Central Government" shall be substituted.

(*vii*) In rules 15 and 16 of the said rules, for the words "Governor General in Council" wherever they occur, the words "Central Government" shall be substituted.

(*viii*) In the Schedule annexed to the said rules—

(*a*) In Form A for the words "Governor General in Council" the words "Central Government" shall be substituted; and

(*b*) in Form B for the words "Secretary of State" in both places where they occur, the words "Governor General" and for the words "Governor General in Council" the words "Central Government" shall be substituted.

M. W. YEATTS,

Joint Secy. to the Govt. of India (offg.).

Registered No. C207

The Calcutta Gazette

THURSDAY, APRIL 29, 1937.

PART IB

Educational Notices.

Presidency Division.

40-1A, Free School Street, Calcutta, the 10th April 1937.

CORRIGENDUM.

In the list of candidates who were awarded Middle Scholarships in 1936, published in the *Calcutta Gazette* on Thursday, the 24th December 1936, under the head "24-Parganas" and sub-head "Two scholarships reserved for Muhammadans"—

Read

1	Md. Abdur Rashid	.. Narayanpur M. E. School	.. Nawab Bahadur's Institution, Murshidabad.

for

1	Md. Abdur Rashed	.. Narayanpur M. E. School	.. Nawab Bahadur's Institution, Murshidabad.

P. BANERJEE,

for *Inspector of Schools, Presidency Division.*

Medical College, Calcutta, 1937.

Rules for the guidance of students seeking admission into the Medical College, Calcutta.

1. Two classes of students are admitted to the college:—

(1) *Civil pupils' class.*—Admission to this class is restricted to students, male or female, who were born within or whose parents are domiciled within the territorial jurisdiction of the Calcutta University. Three students are also eligible for admission from the Dacca University area and three from the Dacca Intermediate Board. Students from other provinces and from Indian States for whom places have been reserved are also eligible for admission to the college.

Only students who intend to take the M. B. examination of the Calcutta University are admitted to this class.

(2) *Military pupils' class.*—Only European or Anglo-Indian students are admitted to this class (see separate prospectus for military pupils whose admission is regulated by the Director-General, Indian Medical Service).

NOTE.—Casual students are not admitted. No students are admitted other than those in one or other of the above classes.

2. The minimum preliminary qualification for admission is the First Class Pass certificate of the I. Sc. examination of the Calcutta University with Physics, Chemistry and Mathematics or an examination recognised as equivalent to it. This rule may be relaxed in favour of Muhammadan students and such candidates having passed the said examination in the second division may be admitted, provided they are otherwise considered suitable, to make up the number allotted for the Muhammadan students. In assessing the claims of those eligible for admission special weight will be attached to proficiency in English.

3. (a) Female students qualified under rules 1 and 2 will be admitted to the college, provided there is a vacancy in the Swarnamoyee Hostel in which all female students must reside. For special reasons to be recorded in writing, the Principal may allow any female student to reside outside this Hostel.

(b) Female students studying in the college but belonging to provinces other than Bengal and not domiciled in Bengal will pay rents for accommodation in the Swarnamoyee Hostel.

4. The session commences with the summer term which begins on the 15th June and ends on the day before the commencement of the Durga Puja holidays. The winter term commences on the day after close of the Durga Puja holidays and ends on the 31st March.

5. All applications direct from new students in Bengal for admission to the college should be accompanied by a fee of Rs. 4 which will not be refunded.

All new students must apply for admission to the Principal, Medical College, Calcutta, in the prescribed form, available in his office before the 25th May except in the following cases:—

(a) Students from other provinces for which places are reserved should apply to the Inspector-General, Civil Hospitals, of those provinces for admission within such dates as that officer may prescribe.

(b) The candidates from Indian States will be nominated by the States themselves.

(c) Students from the Dacca University area will be selected as follows:—

(i) Three students will be selected by the Dacca University, and

(ii) Three students by the Chairman of the Dacca Intermediate and Secondary Education Board.

6. The number of civil students to be admitted each year is 105. Vacancies are allotted as follows:—

Other provinces and Indian States including 1 from Nepal State	8
Dacca	6
Surgeon-General's nominees	5
Women	5
Muhammadan	21
Others	60

Preference for admission will usually be given to candidates who have superior qualifications, but the final selection lies entirely with the Selection Committee appointed by Government.

(*a*) Besides the students nominated by the Indian States under rule 5 (*b*), one student will be nominated by the Inspector-General of Civil Hospitals, Central Provinces, six students (including one female student) by the Inspector-General, Civil Hospitals, Assam, and six by the authorities mentioned in rule 5 (*c*).

These students must possess the qualifications mentioned in rule 2 and the nomination must reach the Principal, Medical College, Calcutta, before the 10th June each year, failing which the vacancies will be filled with local candidates. Vacancies arising by resignation or otherwise in places filled by reservation for the authorities in paragraph (*a*) cannot be filled again by those authorities during the year.

(*b*) Five seats shall be reserved annually for nomination by the Surgeon-General provided the candidates possess the necessary physical qualifications and at least a 2nd class pass certificate of the I.Sc. examination of the Calcutta University with the subjects mentioned in rule 2 or of an examination recognised as equivalent to it. These nominations shall ordinarily be made after the Selection Committee have made their choice under clause (*c*).

(*c*) The remaining vacancies shall be filled up by the Selection Committee specially appointed by Government from year to year. This Selection Committee will be the authority to select candidates belonging to Bengal.

(*d*) Every student selected by the Selection Committee for admission shall be examined medically in the Medical College, have his health card filled up and be passed fit before his fees are accepted, provided that if it is proposed to reject any student on the ground of his being medically unfit as a result of such examination, such decision shall not take effect unless it is sanctioned by the majority of votes of the members of the medical profession on the Selection Committee.

(*e*) Any candidate who has—

(*i*) endeavoured to enlist for his candidature the support of persons of influence or of Government officials,

(*ii*) personally canvassed any member of the Selection Committee or on whose behalf anyone else has canvassed any such member,

(*iii*) produced any letter of recommendation other than certificates from teachers or testimonials from persons under whom he has actually been employed,

shall be held to be disqualified for admission into the Medical College.

7. Of the total number of candidates nominated by the Selection Committee at least one-fourth should be Muhammadans, if a suitable number of qualified candidates belonging to that community can be obtained.

8. Selected candidates must pay the following fees within the time prescribed by the Principal, failing which their names will be struck off the rolls:—

	Rs.
Admission fee	25
Fees for summer term	100
Athletic Club fees	4
Caution money for Laboratory Practice ...	10
Total ...	139

(a) A student who without leave absents himself from the College or his hostel for more than one month, shall be removed from the rolls of the College, if the College Council so recommend. No refund of fees paid can be claimed in such cases.

Fees other than caution money once paid cannot be refunded except to those whose claim for refund is tenable under rule 17. The levy, accounting and disposal of caution money will be governed by the rules prescribed under Government order No. 1689Medl., dated the 24th May 1932.

9. Forms of application for admission will be issued from the 15th April and received up to the 25th May every year.

10. Failed students must apply for admission and pay the fees within the date prescribed by the Principal, otherwise their claim will lapse.

11. All civil students admitted after 1925-26 will pay Rs. 200 in two instalments, viz., Rs. 100 for the summer term and Rs. 100 for the winter term They must also pay the annual Athletic Club fee of Rs. 4 (with the exception of female students) and any caution money due for attendance at practical classes along with the fees for their summer term. Fees once paid cannot be refunded except those whose claim for the refund is tenable under rule 17.

12. The fees for each term are to be paid in one instalment. The fees for the summer term are due (except from new students) on the 15th June and those for the winter term on the 1st November and must be paid together with athletic club fees, on those dates or on such later dates as the Principal may direct, after which a daily fine of annas four will be levied along with the fees on each defaulter. The names of students whose fees are more than 30 days overdue will be removed from the rolls of the college.

(a) A student detailed to hospital duty who overstays the authorised vacation leave without the permission of the Principal will be liable to pay a fine of Rs. 2 only for each day of overstay.

13. A student kept back in, or referred back to the class in which he was previously studying on account of his failure to appear at or pass any examination prescribed for promotion to the next higher class, will pay Rs. 50 each term until he passes the examination in question, after which he will pay fees on the full scale laid down in rule 11.

14. The fee for certificates issued to civil students leaving the college before completing their study shall be Rs. 40 for each course of lectures and practical classes and Rs. 30 for every three months of hospital practice.

[In calculating the sum to be paid under this rule the amount of college fees paid by the student (or in the case of a student enjoying a stipendiary scholarship and free tuition the amount of which would have been paid by him had he been a paying student) shall be deducted.]

15. Students who fail to appear at or to pass the Final M. B. Examination shall immediately on readmission after failure, pay fees each term at the rate of Rs. 25 for each of the subjects in which they are to appear at the subsequent examination.

16. The fee for post-graduate students undergoing a course of training in the Pathological, Bacteriological, Physiological or Chemical Laboratory is Rs. 90 for a period not exceeding six months.

17. Students who hold scholarships awarded by the Government of Bengal or Government scholarships awarded by the Board of Intermediate and Secondary Education, Dacca, and all holders of Mohsin Stipend irrespective of the authority granting such stipend are not required to pay the annual fee of Rs. 200 for the year in which they hold such scholarships if they are natives of Bengal or if their parents are domiciled in Bengal. All holders of other scholarships, whether granted by other Local Governments, Local Bodies or the Dufferin Fund, shall pay the same fees as Civil Students.

18. The following is the curriculum of the College:—

Civil students.

I. First Year (one summer term and one winter term)—

Lectures on Physics, Chemistry (Inorganic and Organic), Botany and Zoology and Practical Classes in all these subjects.

Test Examinations in each of these subjects will be held during the course of the First Year Class and students who fail* in these examinations will not be sent up for the Preliminary Scientific M.B. Examination. Students failing* to pass the Preliminary Scientific M.B. Examination of the Calcutta University four times within two years will be transferred to the Membership Course of the State Medical Faculty of Bengal. (Such students shall be allowed to appear at the Primary Membership Examination of the State Medical Faculty at the first two available examinations after their transfer to the Membership Course and they will be permanently removed from the rolls of the College in case of their failure* to pass the Primary Membership Examination in the second chance.)

N.B.—First year's course also includes Anatomy. In the summer term there will be demonstrations in which 75 per cent. of attendance is compulsory. In the winter term the superior extremity is to be dissected by the 15th of January.

II. Second Year (one summer and one winter term)—

Lectures on Anatomy, Physiology, Practical Classes in Physiology and Dissections to be followed by Test Examinations in these subjects during the course.

Students failing* to pass the Test Examinations in Anatomy and Physiology will not be eligible for any scholarship and will not be promoted to the Third Year Class.

III. Third Year (one summer and one winter term)—

Lectures on Anatomy, Physiolgoy and Materia Medica and Pharmacology Dissections and Practical Classes in Anatomy, Physiology and Pharmacy followed by Test Examinations in Anatomy and Physiology.

Students who fail* in these Test Examinations will not be sent up for the First M.B. Examination. Students who fail* four times in two years at the First M.B. Examination will not be allowed to go on with the M.B. Course, but will be transferred to the Membership Course of the State Medical Faculty, Bengal. (Such students shall be allowed to appear at the Intermediate Membership Examination of the State Medical Faculty at the first two available examinations after their transfer to the Membership Course and they will be permanently removed from the rolls of the College in case of their failure* to pass the Intermediate Membership Examination in the second chance.)

IV. Fourth Year (one summer and one winter term)—

Lectures on Pharmacology and Materia Medica, Elementary Bacteriology and General Pathology, Medicine, Surgery and Clinical Medicine and Practical Classes in Elementary Bacteriology and Pathology.

Test Examinations in Elementary Bacteriology and General Pathology, Pharmacology and Materia Medica will be held during the course. Students who fail* in these Test Examinations will not be sent up for the Second M.B. Examination. This year's curriculum also includes Hospital Practice for 12 months and 20 practical classes in Clinical Methods and 30 Demonstrations in Practical Surgery and Bandaging. Students who fail* four times to pass the Second M.B. Examination will not be allowed to continue in the M.B., Course, but will be transferred to the Membership Course of the State Medical Faculty of Bengal.

*Failure to appear at an examination is equivalent to failure in the examination.

V. Fifth Year (one summer and one winter term)—

Lectures on Forensic Medicine and attendance at 12 Medicolegal Post-mortem Examinations and Lectures on Hygiene and Public Health with Practical Demonstrations.

Test Examinations in these subjects will be held during the course. Students who fail* in these Test Examinations will not be sent up for the Third M.B. Examination. This year's curriculum also includes lectures on Medicine, Clinical Medicine, Surgery, Dental Surgery (Optional), Midwifery, 20 Demonstrations in Practical Midwifery and Hospital Practice for 12 months. Students who fail* four times to pass the Third M.B. Examination will not be allowed to continue in the M.B. Course, but will be transferred to the Membership Course of the State Medical Faculty of Bengal.

VI. Sixth Year (one summer and one winter term)—

Lectures on Advanced Midwifery, Ophthalmic Surgery, Clinical and Operative Surgery, Mental Diseases, Hospital Practice for 12 months, including attendance in the special departments for diseases of the eye, ear, nose and throat and venereal diseases, elementary instruction in Radiology and classes in Special Pathology and in Surgical Anatomy.

Any student failing* to pass the Final M.B. Examination of the Calcutta University within the limit of 19 months calculated from the date of the candidate's passing in a subject or subjects of the said examination, will be transferred to the Membership Course of the State Medical Faculty of Bengal.

19. In order to qualify for signature for lectures and Practical Classes and attendance at Hospital 75 per cent. of possible attendance at lectures, demonstrations, Practical Classes and working days in the wards of the Hospital is compulsory. Absence with or without leave is calculated as non-attendance.

20. The following are the scholarships and rewards obtained by students:—

(*a*) Ten college scholarships of Rs. 12 each with free tuition tenable for one year awarded to the first ten students on the results of the Test Examination of the first year class, provided such students also pass the Preliminary Scientific M. B. Examination of the Calcutta University at the first attempt.

(*b*) Ten college scholarships of Rs. 12 each with free tuition tenable for one year awarded to the first ten students on the results of the second year's Test Examinations, provided they have not attended more than one course in the second year.

(*c*) Ten scholarships of Rs. 12 each with free tuition awarded to the first ten students on the results of the Test Examinations of the third year class, provided such students also pass the First M. B. Examination of the Calcutta University at the first attempt.

(*d*) Ten scholarships of Rs. 12 each with free tuition tenable for one year awarded to the first ten students on the results of the Test Examination of the fourth year class, provided such students also pass the Second M. B. Examination of the Calcutta University at the first attempt.

(*e*) Ten scholarships of Rs. 12 each with free tuition tenable for one year awarded to the first ten students on the results of the Test Examination of the fifth year class, provided such students also pass the Third M. B. Examination of the Calcutta University at the first attempt.

NOTE.—Only students of Bengal are allowed to compete for these scholarships. 40 per cent. is the pass mark for Text Examinations, 60 per cent. in the aggregate must be obtained by a candidate to be eligible for a scholarship. All scholarships are granted subject to good conduct and satisfactory progress.

(*f*) Six Government scholarships (one for each year) of the value of Rs. 25 will be awarded to the female students of the regular classes who do not hold Dufferin or other scholarships except Mrs. Mary Chandra's Scholarship.

*Failure to appear at an examination is equivalent to failure in the examination.

(*g*) *Mohsin scholarships.*—Six stipends of the value of Rs. 15 each tenable in the Medical College, Calcutta, are annually awarded by the Director of Public Instruction from the Mohsin Endowment Fund to deserving poor Bengali Muhammadan students in the following manner:—

Two scholarshps on admission tenable for one year only on the result of the I. Sc. Examination.

Two scholarships tenable for two years on the result of the Preliminary Scientific M. B. Examination.

Two scholarships on admission tenable for three years on the result of the First M. B. Examination subject to their passing the Second and Third M. B. Examinations in regular course.

(*h*) A limited number of stipends will be granted to Muhammadan students in straitened circumstances who must prove to the satisfaction of the Principal that they are poor and deserving Bengali Muhammadan students.

21. If on account of the death, resignation or dismissal of any college scholar a scholarship falls vacant, such a scholarship for the remainder of its tenure will be awarded to the next best student in the list of the first scholarship examination or to such other students as the Principal may consider fit.

22. Holders of college scholarships, any other Government scholarships or Trust Fund Scholarships administered by Government are not eligible for the Durga Charan Laha Scholarship. Similarly a student already holding a scholarship, either on the results of the University Examination or granted by Government, is not eligible to compete for the college scholarships.

23. Civil students who at any time are kept back for a second year of study, in all the subjects of one curriculum, are thereby rendered ineligible for any of the stipendiary scholarships awarded by the Government of Bengal. They are, however, eligible for the special scholarships, Mohsin Stipends and class prizes and medals and certificates of honour of the college except the Sir Frank Connor Memorial Prize for which only the regular students are eligible.

24. Certificates of honour to the number of three in each subject, may be awarded by the Professor, subject to the sanction of the Principal, to students who have not obtained the medal but are deemed worthy of it (on the result of the test examination in that subject or any special Honours Examination held for the purpose).

25. The following is the list of prizes and special scholarships:—

List of prizes and special scholarships.

Name of reward.	Subject.	To whom open	Condition of grant.	When awarded.	Value and nature	Tenure
					Rs. a.	
Goodeve Scholarship	Midwifery ..	Civil students of fifth year's curriculum who are bona-fide natives of India of Hindu or Muhammadan parentage.	On the result of the special examination in Midwifery	At the end of the fifth year.	12 0 per month.	One year
F. C. Chatterjee Scholarship	Histology ..	Civil students of Indian parentage.	(*a*) The best student in Histology Normal and Morbid, at the end of fourth year. (*b*) Good conduct.	Annually in June	15 0 per month.	Ditto
Abdul Gunny Scholarship.	....	Civil students	The best student in all subjects at the College Examinations of the first to fourth years inclusive.	Ditto	22 0 per month	Ditto
Prosector's Prize.	Anatomy ..	Ditto ..	(*a*) The first two students in Anatomy at the end of the second year. (*b*) Satisfactory work as prosector.	Annually	24 0	

Name of reward.	Subject.	To whom open.	Condition of grant.	When awarded.	Value and nature.	Tenure.
					Rs. a.	
Bholanath Bose's Prize.	Medicine or Surgery.	Civil students	The most successful student of the fourth year at bedside diagnosis of disease in Medicine or Surgery.	Annually	35 0	
Government Prize in Clinical Medicine.	Clinical Medicine.	Civil students and others.	The best clinical student of fourth and fifth years.	..	35 0	
Government Prize in Clinical Surgery.	Clinical Surgery.	Ditto ..	The best clinical dresser of fourth and fifth years.	..	Instruments worth not exceeding Rs. 35.	
Duke of Edinburgh's Prize.	Surgery ..	Civil students	To the best student of the fourth and fifth years.	..	28 0	
Raye Testimonial Prize.	Anatomy ..	Civil and Military pupils.	On the result of third year examination in Anatomy.	Annually	56 0	
Maharaja of Gwalior Prize.	Preliminary Scientific M. B. Examination.	Civil students	Highest marks at the Preliminary Scientific M. B. Examination and provided that the winner does not get any other prize.	Ditto	10 8	
Dr. Chandra's Scholarship.	Materia Medica and Therapeutics.	(1) Senior students of the Medical College. (2) Ex-senior students of the Medical College studying in a Medical College in India or Europe. (3) Any Graduate or Licentiate in Medicine of whatever standing	Examination and Thesis. Winner need not complete course of study in India.	Ditto	30 2 per month.	One or two years.
Mrs. Mary Chandra's Scholarship.	....	Female medical students of the second year.	To the female medical student who stands first at the first year's examination. No restriction on place of study afterwards.	Annually at the end of first year.	20 0 per month.	Two years
Sir Pardey Lukis Memorial Scholarship.	Medicine ..	Civil and Military students.	To the student who stands first at the Honours Examination in Medicine at the end of the fifth year.	Annually at the end of the fifth year.	20 0 per month.	One year
Banku Behari Gupta Scholarship.	....	To a native of the Tangail subdivision.	Awardable to a student of the Tangail subdivision, preferably of village Bhatgram who has passed his Matriculation Examination from the Pogose School, Dacca.	Annually on admission.	10 0 per month.	Ditto.
Goodeve ..	Anatomy ..	Civil students	To the best Indian student of second year in the subject.	End of second year.	Silver.	
Macnamara ..	Chemistry ..	Ditto ..	To the best Indian student of first year class.	End of first year.	Do.	
Class ..	Ditto ..	Civil and Military students.	Ditto ..	Ditto	Gold.	
Class ..	Botany ..	Civil students	Ditto ..	Ditto	Do.	
Class ..	Comparative Anatomy.	Ditto ..	Ditto ..	Ditto	Do	
Class ..	Physiology ..	Civil and Military students.	To the best student of third year.	End of third year.	Do.	
Class ..	Anatomy ..	Ditto ..	Ditto ..	Ditto	Do.	
Class ..	Materia Medica and Pathology.	Ditto ..	To the best student of fourth year class in those subjects.	End of fourth year.	Do.	
Class ..	Medicine and Surgery.	....	To the best student of fifth year class in those subjects.	End of fifth year.	Do.	
Class ..	Midwifery ..	....	To the best student of the sixth year class in this subject.	End of the sixth year class.	Do.	

Name of reward.	Subject.	To whom open.	Condition of grant.	When awarded	Value and nature.	Tenure.
					Rs. a.	
Class ..	Dental Surgery.	Civil students	To the best Civil students of the fifth year only.	End of fifth year.	Gold.	
Class ..	Medical Jurisprudence and Hygiene.	Civil and Military students.	To the best student of fifth year.	Ditto	Do.	
Class ..	Ophthalmic Surgery and Ophthalmic Medicine.	Civil students	To the best of sixth year Civil and fifth year Military students.	Ditto	..	
Orfilla ..	Medical Jurisprudence.	Ditto ..	To the best student at the oral and practical portion of the Pass Examination of the third M.B., held in April.	Ditto	Silver.	
Calvert ..	Medicine ..	Ditto ..	To the student who stands second in the Honours Examination in Medicine at the end of fifth year.	Annually at the end of fifth year.	Do.	
Sutherland ..	Medical Jurisprudence.	Ditto ..	To the second best student in Practical Medical Jurisprudence at the third M. B. Examination.	End of fifth year.	Do.	
Wilson ..	Operative Surgery.	Ditto ..	To the student of the sixth year class who secures the highest marks in Operative Surgery in an examination conducted by the Professor of Surgery.	Ditto	Do.	
Deare Prize ..	Clinical Medicine.	Ditto ..	To the best regular student of the sixth year class.	Annually	80 0 or thereabout.	
Anandalal Sanyal Prize.	Midwifery ..	Ditto ..	To the student who stands second in the class Assistantship Examination.	End of the fifth year.	95 0 Prize in books.	
Hemnath Ghosal Scholarship.	....	Ditto ..	Student passing the First M. B. Examination of the Calcutta Medical College who stands next to the student securing Government scholarship.	At the end of third year.	7 0	One year.
Shanks Medal	Clinical Pathology.	Ditto ..	To the best student of the fifth and sixth year classes on the results of a competitive examination in Clinical Pathology.	Annually	Silver Medal.	
Sir Frank Connor Medal.	Surgical Anatomy.	Ditto ..	To the student of the sixth year class who obtains the highest number of marks in Surgical Anatomy.	Annually at the end of the Surgical Anatomy class and before the commencement of the Final M.B. Examination.	Do.	
Green-Armytage Prize.	Clinical Gynaecological and Obstetrical Pathology.	Sixth year Civil regular students and Final M B. passed students qualified not more than six months before examination.	To the best student	Annually	Money donation of Rs. 50 and a gold medal valued at Rs. 25.	
Sir Frank Connor Memorial Prize.	Surgery ..	Regular student of the 6th year class.	To the student who stands first in Surgery at the Final Examination among the successful students of this College.	Ditto	In books or instruments to be settled by the Professor of Surgery.	
Dr. Lal Mohan Ghosal Silver Medal.	Physiology	To the best student of the second year class.	On the result of the annual Test Examination at the end of the second year class	Ditto	Silver Medal.	

MEDICAL COLLEGE, CALCUTTA.

Application for Enrolment.

To be submitted on or before the 25th May.

[No application will be registered unless a fee of Rs. 4 only is paid either personally or by money-order.]

N.B.—The admission is restricted to students who are born within or whose parents are domiciled within the territorial jurisdiction of the Calcutta University.

This application must accompany a certificate from the Principal of the College from which the candidate appeared in (or passed) the I.Sc. Examination that he had Physics, Chemistry and Mathematics in his I.Sc. course.

1. Name.....
2. Age.....
3. Race, caste or religion, nationality.....
4. Residence (native district, village and post office).....

   .....
5. Father's name (alive or deceased).....
6. (If father dead, guardian's name and residence.).....

   .....

   (State relationship with the guardian).....
7. Occupation and approximate annual income of father.....
8. Occupation and approximate annual income of guardian.....
9. Source of maintenance while a student.....
10. What University examination appeared (state name of college and roll number).....
11. What University examinations passed.....

    (*a*) In what division.....

    (*b*) From what college.....

    (*c*) In what year.....

    (*d*) From what University.....

    (*e*) In which of the subjects (Physics, Chemistry, Mathematics, Botany, Zoology) have you appeared or passed the Intermediate Examination in Science or the Bachelor of Science. { ....
12. What is your University registration number.....
13. Did you apply for admission in any previous year? If so, quote the registration number of your application with dates.....

    .....

We hereby certify that the above statement of particulars is true.

Signature of applicant.....

Address.....

Signature of the guardian.....

Address.....

Date.....

N.B.—Any candidate who has—

(*i*) endeavoured to enlist for his candidature the support of persons of influence or of Government Officials,

(*ii*) personally canvassed any member of the Selection Committee or on whose behalf anyone else has canvassed any such member,

(*iii*) produced any letter of recommendation other than certificates from teachers or testimonials from persons under whom he has actually been employed,

shall be held to be disqualified for admission into the Medical College.

T. C. BOYD, LT.-COL., I.M.S.,

Principal, Medical College, Calcutta.

LICENSING BOARD, BENGAL.

Calcutta, the 19th April 1937.

The following Electrical Supervisors having been granted exemption from examination by the Licensing Board under regulation 21 of the "Regulations under rule 40A" are declared to have been granted Certificates of Competency as shown against each :—

Name.	Qualified in Class.
Neol Thomas Stuart Caddick	"B"
Jwahar Singh	"B"
Bernard Hunter Jameson Thoms	"A"
Herbert Robertson	"B"
Sombhu Nath Chatterjee	"C" and "E"
Surendra Kumar Chatterjee	"C"
Kshitish Chandra Sanyal	"A"
William Craigie Ramsay	"A"
George Eric Fielding Russel	"A"
Andrew Laidlaw Varrie	"A"
William Easton Procter	"B"
William Frederick Smith	"A"
Prabhat Kumar Gupta	"C" with Part V(*a*) and V(*d*).
Thomas Haddow	"C"
John Dryburgh	"A"
Robert Hutchinson	"A"
John Ramsey Sawyer	"A"
Nundolall Chatterjee	"B"
James Bernard Duffy	"A"
Anil Chandra Roy	"B" with Part V(*d*).
David Dragie Low	"B"
Nagendra Nath Roy	"A"
George Anderson Baird	"B"
Jagadish Chandra Chakravorty	"C"
Chandi Charan Mitra	"C" and Part V(*b*).
Arthur Stewart Petrie	"B"
William Paul Gordon	"B"
John Caradog Bleddyn	"A"
Bonomali Roy	"C"
Enoch Glen McMann	"B"
Hari Charan Ghose	"B"
Amendra Nath Dass	"B"
Sudhir Kumar Dutta	"B"
Alexander Booth Baillie	"B"
Thomas John Grieveson	"A"
Whitbert Arnold Lehany	"B"
Kenneth F. King	"A"
Percy Weaver Walton	"A"
Patric Henry Bolland	"A"
Charles Lionel Blanche	"C"
David Alexander Smith Clark	"C"
Satyasasi Choudhury	"C"
Bernard George Purcell	"B"
Misri Lal Sinha	"C"
Hubert Wind	"B"
John Sydney Wall	"B"
Rupendra Mohan Choudhury	"C"
Sudhir Chandra Das Gupta	"C"
Edward Kelly	"B"
Gopal Chandra Bose	"C"
Bankim Krishna Paul	"B" with Part V(*b*).

N. N. SEN GUPTA,

Secretary, Licensing Board, Bengal.

Admission to the Campbell Medical School, Calcutta—Session 1937-38.

NOTIFICATION.

Applications for admission to the Licentiate Class of the Campbell Medical School will be received in the prescribed form (obtainable on payment of Re. 1 per form from the office of the Superintendent during office hours on week days) from the candidates of the Presidency and Rajshahi Divisions only from the 15th May to within ten days of the publication of the results of the Matriculation Examination of the Calcutta University, 1937. Applications should be supported by certificates prescribed in the "Form" and submitted by registered post addressed to the Superintendent.

Late or incomplete applications will not be entertained.

The Superintendent cannot grant interview to candidates or party on their behalf.

J. C. DE, *Superintendent,*

Campbell Medical School and Hospital.

Hooghly Mohsin College, Chinsura.

Chinsura, the 22nd April 1937.

Hooghly Mohsin College is one of the oldest in Bengal, having been founded in 1836. It will re-open on Friday, the 2nd July 1937, after the summer vacation.

The College teaches up to the B. A. and B. Sc. standard. It is affiliated in Honours in the following subjects:—

English, Sanskrit, Philosophy, History, Mathematics and Physics.

Applications for admission should be made in the prescribed form immediately after the publication of the University results. Prospectus and admission forms can be had from the College office on personal application or by sending a stamped cover. Students who failed in the University examination and desire re-admission should attach the University admit card and their crossed list to their application form.

As a rule, students who have passed the Matriculation or Intermediate Examination in the Third Division will not be admitted. Students who have failed to pass in any year after two attempts will not be allowed to continue.

There are two hostels attached to the College, one for Hindus and the other for Moslems. Both hostels are pucca buildings and very close to the College.

Twenty-five per cent. of the vacancies will be reserved for Moslem students, if necessary, but this reservation will not hold good if sufficient applications are not received at least one week before the day on which the College re-opens.

K. ZACHARIAH,

Principal, Hooghly Mohsin College.

State Medical Faculty of Bengal.

Grosvenor House, Calcutta, the 23rd April 1937.

NOTICES.

No. 1162F.—The written part of the ensuing Intermediate and Final Membership Examinations of the Faculty under the *old regulations* will be held in the Examination Hall of the Calcutta Medical College on the following days and in the following order :—

Date. From 12 noon to 3 p.m.

Intermediate Examination.

1937.

Monday, 7th June .... Anatomy.

Final Membership.

Monday, 7th June .. Medicine.
Tuesday, 8th June .. Surgery.

Intermediate Examination.

Tuesday, 8th June .. Physiology.
Thursday, 10th June .. Materia Medica.

Final Membership.

Thursday, 10th June .. Midwifery.
Friday, 11th June .. Pathology.

Intermediate Membership.

Friday, 11th June .. Organic Chemistry.

Final Membership.

Saturday, 12th June .. Medical Jurisprudence.
Monday, 14th June .. Hygiene.

The time and place for holding the oral and practical examinations in each subject will be announced later.

Applications and fees for admission to the above examinations will be received in this office up to the 15th May 1937.

No. 1163F.—The written part of the ensuing Preliminary, First, Second, Third and Final Membership Examinations of the Faculty under the *new regulations* will be held in the Examination Hall of the Calcutta Medical College on the following days and in the following order :—

Date. From 12 noon to 3 p.m.

First Examination.

1937.

Monday, 7th June .. Anatomy.

Final Examination.

Monday, 7th June .. Medicine.
Tuesday, 8th June .. Surgery.

First Examination.

Tuesday, 8th June .. Physiology.

Preliminary Scientific Examination.

Tuesday, 8th June .. Inorganic Chemistry.
Thursday, 10th June .. Physics.

Second Examination.

Thursday, 10th June .. Materia Medica.

Final Examination.

Thursday, 10th June .. Midwifery.

Second Examination.

Friday, 11th June .. Pathology.

Date. From 12 noon to 3 p.m.

Preliminary Scientific Examination.

1937.

Friday, 11th June .. Organic Chemistry.
Saturday, 12th June .. Botany.

Third Examination.

Saturday, 12th June .. Medical Jurisprudence.
Monday, 14th June .. Hygiene.

Preliminary Scientific Examination.

Monday, 14th June .. Zoology.

The time and place for holding the oral and practical examinations in each subject will be announced later.

Applications and fees for admission to the above examinations will be received in this office up to the 15th May 1937.

M. N. GUPTA, *Secretary.*

Admission to the Lytton Medical School, Mymensingh.

Mymensingh, the 10th April 1937.

Application for admission into the 1st year class of the Lytton Medical School, Mymensingh, will be received in the prescribed form (obtainable in the office of the Superintendent, Lytton Medical School, on payment of Re. 1 only), from candidates from Dacca and Rajshahi Divisions up to the 25th June 1937 or within ten days of the publication of the result of the Matriculation Examination.

Women candidates will not be admitted in this school.

Application should be supported by a true copy of the certificates of (*a*) having passed the Matriculation Examination with a certified copy of the marks obtained, or any higher examination in arts or science of a recognised University, (*b*) certificate of character and residence from a gazetted officer or a gentleman of equal position or from the Principal or Head Master of the college or school in which the candidate last studied. Where more than six weeks have elapsed between the date of leaving college or school and the date of application for admission a second certificate of character is required covering the intervening period. This should be obtained from a gazetted officer or a gentleman of equal position such as an Honorary Magistrate having an intimate knowledge of the applicant.

Incomplete or late applications will not be considered.

All candidates shall appear before the Selection Committee at the Lytton Medical School, Mymensingh, with original certificates on the 30th June 1937.

S. NAG, LT.-COL., I.M.S.,

Supdt., Lytton Medical School, Mymensingh.

Orders by the Vice-Chancellor and Syndicate of the Calcutta University.

Senate House, the 12th April 1937.

NOTIFICATION No. T. 462.

Matriculation Examination, 1939.

In modification of notification No. T. 449, dated the 17th October 1936, the following books are prescribed in Urdu (Vernacular) and Urdu (Second Language):—

Urdu.

(Vernacular.)

TEXT-BOOKS.

Prose.

1. Matriculation Urdu Selections (University Publication).

Pieces to be read:—

Banatun Na'sh, pages 1-21.

Si Para-i-Dil, pages 22-39 (top).

Qisas-i-Hind, pages 149-157 (bottom).

Khutut Sir Syed, Letter Nos. 2 and 3.

Poetry.

2. Musaddas-i-Hali. First 80 Bands.

The following books are recommended as showing the standard up to which the students will be expected to have read:—

Makhzani Adab, by Maulvi Hafiz, and Dr. M. A. Shahid (Aligarh Muslim University Press).

Kawkab-i-Durri (short history of the birth of the Prophet), by Khujasta Akhtar Banu Suhrawardy Begum.

Intikhab, by Hafiz S. Md. Mahmud.

Urdu.

(Second Language.)

(Open only to a candidate if it is not his/her vernacular.)

1. Muntakhab-ul-Hikayat, by Nazir Ahmad.

Pieces to be read:—

Stories 1-25.

2. Matriculation Urdu Selections (University Publication).

Pieces to be read:—

Ser Guzasht Hajerah, pages 51-61 (middle).

Aina-i-Ibrat, pages 120-138 (top).

Grammar recommended:—

Usul-i-Urdu.

J. CHAKRAVORTI, *Registrar.*

Orders by the Vice-Chancellor and Syndicate of the Calcutta University.

Senate House, the 16th April 1937.

NOTIFICATION No. T. 463.

Elementary Scientific Knowledge.

The following books are recommended to be studied in accordance with the prescribed syllabus in Elementary Scientific Knowledge for the Matriculation Examination under the revised regulations:—

1. Probeshika Bijnan, by Bhattacharjee, Roy and Chakraborty.

2. Prathamic Bijnan, by Bhattacharjee and Majumdar.

3. Bijnan Prabesh, by Mookerjee and Mitra.

4. Prathamic Bijnan, by Arun Kumar Dutt.

5. Bijnaner Pathe, by Hemendra Kumar Bhattacharjee.

6. Saral Bijnan Parichay, by Ganapati Banerjee.

7. Bijnan Prabeshika, by Ray and Mittra.

8. Bijnan Prabeshika, by Sukumar Basu.

J. CHAKRAVORTI, *Registrar.*

Calcutta University.

Senate House, the 17th April 1937

NOTIFICATION No. MISC R., 34.

The following changes in the Regulations sanctioned by the Government of Bengal, Education Department, are notified for general information:—

Insert the following proviso at the end of section 9 (*c*) (*ii*) of Chapter XXI of the Regulations (edition of 1935), page 60 of the Appendix relating to recognition of schools:—

"Provided that until such date as the Syndicate may prescribe, Head Masters, Assistant Head Masters and Assistant Teachers who have taught English in a recognised school or schools for at least five years before 31st March 1935, may also be recognised as teachers in English, although they may not have been teachers of English in a recognised school on 31st March 1935, if they are employed as such at the time when they apply to the University for recognition."

J. CHAKRAVORTI, *Registrar.*

Orders by the Vice-Chancellor and Syndicate of the Calcutta University.

Senate House, the 20th April 1937.

NOTIFICATION No. 4701/Affl.

It is hereby notified for general information that under section 22, read with sub-section (*3*) of section 21 of the Indian Universities Act, 1904 (VIII of 1904), as amended by the Calcutta University Act, 1921 (VII of 1921), the Government of Bengal (Ministry of Education) have been pleased to order that, with effect from the commencement of the session 1937-38, St. Edmund's College, Shillong, shall be affiliated to the Calcutta University in English to the B.A. Honours standard in extension of the affiliation already enjoyed by it.

J. CHAKRAVORTI, *Registrar.*

Orders by the Vice-Chancellor and Syndicate of the Calcutta University.

Senate House, the 20th April 1937.

NOTIFICATION No. 4702/Affl.

It is hereby notified for general information that under section 22, read with section 21, sub-section (*3*) of the Indian Universities Act, 1904 (VIII of 1904), as amended by the Calcutta Universities Act, 1921 (VII of 1921), the Government of Bengal (Ministry of Education) have been pleased to order that in extension of the affiliation already enjoyed by it, the Ripon College, Calcutta, shall be affiliated to the Calcutta University in History to the B.A. Honours Standard with effect from the commencement of the session 1937-38.

J. CHAKRAVORTI, *Registrar.*

Admission to the Compounder Class, Lytton Medical School, Mymensingh, Session 1937-38.

Mymensingh, the 10th April 1937.

Application for admission to the Compounder Class of the Lytton Medical School, Mymensingh, will be received from the 1st to the 10th August 1937.

Applications should be supported by (*a*) a true copy of certificate of passing the Matriculation or its accepted equivalent examinations, (*b*) a testimonial of good character from a Deputy Magistrate or a gentleman of equal position or from the Principal or Head Master of the college or school in which the candidate last studied, (*c*) a certificate of age—Matriculation certificate or a certificate from the head of the institution in which the candidate last studied will also be accepted as evidence of age.

Application from the candidates must reach the office of the Superintendent between 1st to the 10th August 1937 for registration of their names and they must attend for personal interview on the 24th August 1937 at 10 a.m. in the office of the Superintendent, Lytton Medical School, Mymensingh, together with their original certificates.

Late or incomplete applications will not be entertained.

Note.—Every male student who is selected for admission shall pay an entrance fee of Rs. 4 and first half-yearly instalment of Rs. 12 as tuition fee. He shall also pay the amount of sports and athletic club fee of Rs. 2 by the 1st September 1937.

S. NAG, LT.-COL., I.M.S.,

Supdt., Lytton Medical School, Mymensingh.

Registered No. C207

The Calcutta Gazette

THURSDAY, APRIL 29, 1937.

PART II

Advertisements.

Notices.

Advertisements, Notices, etc., intended for insertion in this part of the Gazette must be sent to Press before 12 noon on Saturday, and all costs deposited and proofs returned by 4 p.m. on Monday. Manuscripts and postal remittances must be addressed to Superintendent, Government Printing (Publication Branch), Bengal Government Press, Alipore.

For the convenience of advertisers located in Calcutta, arrangements have been made to accept advertisements and prepayment of charges at Sales Office, Ground Floor, Writers' Buildings, Calcutta. The latest time for receipt of advertisements for current week's Gazette has been extended till 4 p.m. on Mondays.

In the High Court of Judicature at Fort William in Bengal, in insolvency.

No. 52 of 1935.

Re Balkram Kissenchand.

NOTICE is hereby given that a dividend is intended to be declared in this estate. Persons claiming to be creditors of the above estate are hereby required to file their claims by affidavit supported by vouchers on or before the 20th May 1937, after which date no claim received by the undersigned will be considered,

Persons who have already lodged their claims need not file fresh claims.

A proof of debt form may be had on application from the undersigned

S. C. H MEYER, Official Assignee

10, Old Post Office Street, Calcutta, the 20th April 1937

(890—1)

In the High Court of Judicature at Fort William in Bengal, in insolvency.

No. 99 of 1935.

Re Estate Pheroze Marwanji N. Mehta.

THE abovenamed insolvent, lately residing at No 34, Park Street, in the town of Calcutta, and carrying on business under the name and style of M N Mehta at 65, Ezra Street, Calcutta, having absconded without filing a Schedule of his affairs, notice is hereby given to persons claiming to be creditors of the above estate to file their claims in this office by affidavit, supported by vouchers, on or before the 15th May 1937, after which date no claims received by the undersigned will be considered.

Persons who have already lodged their claims need not file fresh claims.

Notice is hereby given that a dividend is intended to be declared in this estate

A form of proof of debt may be had on application from the undersigned.

S. C H MEYER, Official Assignee

10, Old Post Office Street, Calcutta, the 21st April 1937.

(898—1)

Land Sale Notice.

Advertisement of Sale.

NOTICE is hereby given that the undermentioned plots of land, no longer required by Government, situated along the Eastern Bengal Railway at Chasara Back Bone Siding in the villages of Mokbara and Talla, in the district of Dacca, will be put up to sale at 12 noon on the 15th June 1937 corresponding with the 1st of Ashar 1344 B.S., at the office of the Collector of Dacca.

The purchasers of the several plots of land will be subject to the following conditions :—

1st.—The purchasers will have no power to make any excavations on the land nearer than 15 feet from the railway boundary or to plough the land nearer than 3 feet from the same.

2nd.—If the amount of purchase-money does not exceed Rs. 100, the whole amount must be paid down at once.

3rd.—If the amount of purchase-money exceeds Rs. 100, one-fourth of the amount must be immediately deposited. If the balance be not paid by noon of the fifteenth day after the sale, reckoning the day of sale as one, or if that day be a close holiday, then by noon of the first succeeding office day, the sale shall be cancelled, the sum deposited being forfeited to Government and the lot again put up for sale at the risk of the defaulting purchaser, after issue of advertisement, as in the case of original sale.

4th.—The plots of land will be sold revenue free to the highest bidders.

5th.—The sale will become final on receipt by the Collector of the orders of the Commissioner confirming it, and a regular conveyance will then be granted to the purchaser :—

Consecutive lot number.	Name of district.	Pargana and mauza.	Number of mile on which land is situate.	Situated on which side of the railway.	Approximate area of lot in acres and decimals.
1	2	3	4	5	6
1	Dacca ..	Pargana (not known), mauza Talla.	1-2	South-East ..	·0372
2	Do. ..	Pargana Khijirpur, mauza Mokbara.	1-2	Do. ..	·1074
3	Do. ..	Ditto	1-2	Do. ..	·1735
4	Do. ..	Ditto	1-2	Do. ..	·0185
5	Do. ..	Ditto	1-2	Do. ..	·1395
6	Do. ..	Ditto	1-2	Do. ..	·1024
7	Do. ..	Ditto	1-2	Do. ..	·0940
8	Do. ..	Ditto	1-2	Do. ..	·0330
				Total	·7055

D. L. MAZUMDAR, Collector.

Dacca, the 21st April 1937.

In the 1st Court of the Sub-Judge of Hooghly.

TITLE SUIT No. 11 OF 1937.

WHEREAS a suit under order 1, rule 8, Civil Procedure Code, has been instituted by Haji M. Nabi Shirazi and four others against the Secretary of State for India in Council and six others praying for a declaration that the Wakf created and established by the late Haji Md. Mohsin known as Mahsinya Wakf, Hooghly, by a wakf-nama in Persian language, dated 20th April 1806, was meant for the upkeep of the Mahsinya Imambara at Hooghly, the ceremonies and functions observed therein according to the Shia faith and for the benefit of the Shia community and that it was not the intention of the Wakif that any portion of the wakf should be spent on secular uses, notice is hereby given to all persons interested to apply to this Court on or before 4th May 1937 to be made a party to the above-noted suit.

NILENDRA NATH BASU, Sub-Judge.

Chinsura, the 19th April 1937. (883—1)

In the High Court of Judicature at Fort William in Bengal, in insolvency.

NOTICE OF ADJUDICATION ORDER.

No. 34 of 1937.

Re Shew Prosad Shaw, residing at No. 34, Uma Das Lane in the town of Calcutta, and carrying on business as importer of provisions stores and general order suppliers at No. 34/1, Municipal Market in Calcutta aforesaid, ex parte the debtor.

B. Biswas, debtor's solicitor.

ON the 19th day of April 1937, an order was made by the High Court of Judicature at Fort William in Bengal in its insolvency jurisdiction adjudging the abovenamed as an insolvent.

Note—All debts due to the estate should be paid to me.

Dated this 22nd day of April 1937.

S. C. H. MEYER, Official Assignee.

In the High Court of Judicature at Fort William in Bengal, in Insolvency.

NOTICE OF ADJUDICATION ORDER.

No. 35 of 1937.

Re (Miss) Della Palmer, formerly carrying on business as a "Hair Dresser", under the name and style of the firm of "Della Saloon", and lately residing in suite No. 31, Galstaun Mansion, Park Street, and at present residing at No. 61, Park Street in the town of Calcutta, ex parte the debtor in person.

ON the 19th day of April 1937, an order was made by the High Court of Judicature at Fort William in Bengal in its insolvency jurisdiction adjudging the abovenamed as an insolvent.

Note—All debts due to the estate should be paid to me.

Dated this 22nd day of April 1937.

S. C. H. MEYER, Official Assignee.

In the High Court of Judicature at Fort William in Bengal, in Insolvency.

NOTICE OF ADJUDICATION ORDER.

No. 36 of 1937.

Re Subimal Chandra Bose, at present residing at No. 14, Rup Chand Mukherjee Lane in the suburbs of Calcutta and working for gain as a broker's assistant at No. 2, Royal Exchange Place, Calcutta, ex parte the debtor.

P. N. Mitter, debtor's solicitor.

ON the 20th day of April 1937, an order was made by the High Court of Judicature at Fort William in Bengal in its insolvency jurisdiction adjudging the abovenamed as an insolvent.

Note—All debts due to the estate should be paid to me.

Dated this 23rd day of April 1937.

S. C. H. MEYER, Official Assignee.

In the High Court of Judicature at Fort William in Bengal, in Insolvency.

NOTICE OF ADJUDICATION ORDER.

No. 37 of 1937.

Re Promatha Nath Banerjee, lately residing at Dhalipara, Behala, 24-Parganas, but at present residing at No. 10, Cornwallis Street in the town of Calcutta, a service-holder, ex parte the debtor in person.

ON the 20th day of April 1937, an order was made by the High Court of Judicature at Fort William in Bengal in its insolvency jurisdiction adjudging the abovenamed as an insolvent.

Note—All debts due to the estate should be paid to me.

Dated this 23rd day of April 1937.

S. C. H. MEYER, Official Assignee.

In the Court of the Sub-Judge, Asansol.

INSOLVENCY CASE No. 25 OF 1935.

Darshan Lall Shaw of Asansol, petitioner.

TAKE notice that the abovenamed petitioner insolvent has filed a petition on 3rd December 1936 for his final discharge, and that the 7th May 1937 has been fixed for hearing thereof.

J. P. BANERJEA, Sub-Judge.

Asansol, the 12th April 1937. (884—1)

In the Court of the Sub-Judge, Asansol.

INSOLVENCY CASE No. 3 OF 1937.

W. J. Newell of Ondal, petitioner.

TAKE notice that the petitioner aforesaid has been adjudged an insolvent on 10th April 1937, and that he has been directed to apply for his discharge within one year from the said date.

J. P. BANERJEA, Sub-Judge.

Asansol, the 19th April 1937. (885—1)

In the Court of the Sub-Judge at Asansol.

INSOLVENCY CASE No. 36 OF 1936.

Mahangu Khan, Fireman, Locoshed, Asansol, petitioner.

NOTICE is hereby given that the abovenamed petitioner insolvent filed a petition on 9th April 1937 for his final discharge, and that the 28th May 1937 has been fixed for hearing thereof.

J. P. BANERJEA, Sub-Judge.

Asansol, the 22nd April 1937.

(906—1)

In the Court of the Sub-Judge at Asansol.

INSOLVENCY CASE No. 12 OF 1937.

M. V. Hinton, Guard, East Indian Railway, Asansol, petitioner.

NOTICE is hereby given that the abovenamed petitioner has filed an insolvency petition on 12th April 1937, and that the 14th May 1937 has been fixed for hearing thereof.

J. P. BANERJEA, Sub-Judge.

Asansol, the 23rd April 1937. (907—1)

In the Court of the District Judge at Bogra.

INSOLVENCY CASE No. 4 OF 1936.

TAKE notice that the applicant Dharanidhar Shaha, son of Haladhar Shaha, of Shariakandi, police-station Shariakandi, district Bogra, who was adjudged insolvent on 18th May 1936 by order of this Court, has applied for his discharge and the Court has fixed 11th May 1937 for hearing of the application.

Dated this 22nd day of April 1937.

DWARKANATH DE, Ex-officio Registrar.

(899—1)

ORDER OF ADJUDICATION.

Section 16 of the Provincial Insolvency Act, V of 1920.

In the Court of the District Judge at Chittagong.

INSOLVENCY APPLICATION No. 41 OF 1936.

PURSUANT to a petition, dated 30th November 1936, by debtor, Bankim Chandra Sen, son of late Naba Chandra Sen, of Noapara (alias Guzra), police-station Raozan, district Chittagong, and on the application of the debtor himself and on reading his application and hearing pleader it is ordered that the debtor be and the said debtor is hereby adjudged insolvent.

It is further ordered that the debtor do apply for his discharge by 6th April 1938. His petition will be heard on 6th May 1938. Babu Sachi Kumar Sen Gupta, Pleader, is appointed Receiver.

Dated this 6th day of April 1937.

H. G. WAIGHT, District Judge.

(910—1)

In the Court of the District Judge of Dinajpur.

INSOLVENCY CASE No. 8 OF 1937.

KHODA BAKSH AHAMED, son of late Abededdin Talukdar, of village Mirzapur, police-station Atwari, district Dinajpur, has applied to this Court to be adjudged insolvent.

The 15th day of May 1937 has been fixed for hearing the application at Dinajpur.

T. B. JAMESON, District Judge.

Dinajpur, the 19th April 1937. (878—1)

In the Court of the Addl. District Judge of Hooghly at Howrah.

INSOLVENCY PETITION No. 29 OF 1936.

NOTICE is hereby given that Pankaj Kumar Goswami, son of late Mahendra Lal Goswami, of Bally, thana Bally, district Hooghly, was on the 19th June 1936 adjudged an insolvent. The 7th May 1937 has been fixed for hearing the application for final discharge.

T. ROXBURGH, Addl. District Judge.

Howrah, the 23rd April 1937. (904—1)

In the Court of the Addl. District Judge of Hooghly at Howrah.

INSOLVENCY PETITION No. 94 OF 1936.

NOTICE is hereby given that Jugal Chandra Hazra, son of late Kura Ram Hazra, of Jhikhira, thana Amta, district Hooghly, was on the 1st September 1936 adjudged an insolvent. The 7th May 1937 has been fixed for hearing the application for final discharge.

T. ROXBURGH, Addl. District Judge.

Howrah, the 20th April 1937. (905—1)

ORDER OF ADJUDICATION.

In the Court of the District Judge of Jessore.

INSOLVENCY CASE No. 8 OF 1937.

Kader Buksh Biswas, son of late Herajtulla Biswas, of village Osmanpur, police-station Kotwali, district Jessore, petitioner.

NOTICE is hereby given that the abovenamed petitioner has been adjudged insolvent on the 3rd April 1937, and that he has been directed to apply for discharge within six months from that date.

B. N. CHAKRAVARTY, District Judge.

Jessore, the 19th April 1937. (882—1)

In the Court of the District Judge of Khulna.

INSOLVENCY CASE No. 6 OF 1937.

IT is hereby notified that Arjun Chandra Pal, son of late Kushai Ram Pal, of Harikhali, police-station Bagerhat, district Khulna, applied for being adjudged as an insolvent on 15th April 1937 and 12th May 1937 has been fixed for hearing of the case.

S. N. SEN, District Judge.

Khulna, the 22nd April 1937. (901—1)

ORDER OF DISCHARGE SUBJECT TO CONDITION AS TO EARNINGS, AFTER-ACQUIRED PROPERTY AND INCOME.

Section 41 (2) of the Provincial Insolvency Act, V of 1920.

In the Court of the Sub-Judge at Malda.

INSOLVENCY CASE No. 6 OF 1935.

ON the application of Nasarath Shekh who was adjudged an insolvent on 21st December 1935 and on hearing the insolvent it is ordered that the insolvent be discharged subject to the condition that if he acquires property in future he shall have to pay the debts after retaining Rs. 100 for the maintenance of himself and his family. He will submit account every year in January.

S. A. ALI, Sub-Judge.

Malda, the 19th April 1937. (886—1)

ORDER OF DISCHARGE SUBJECT TO CONDITION AS TO EARNINGS, AFTER-ACQUIRED PROPERTY AND INCOME.

Section 41 (2) of the Provincial Insolvency Act, V of 1920.

In the Court of the Sub-Judge at Malda.

INSOLVENCY CASE No. 4 OF 1936.

ON the application of Pearilal Mondal who was adjudged an insolvent on 8th August 1936 and on hearing the insolvent it is ordered that the insolvent be discharged subject to the condition that if he acquires property in future he shall have to pay the debts after retaining Rs. 120 for the maintenance of himself and his family. He will submit account every year in January.

S. A. ALI, Sub-Judge.

Malda, the 19th April 1937. (887—1)

In the Court of the District Judge of Noakhali.

INSOLVENCY CASE No. 11 OF 1936.

NOTICE is hereby given that Abzahar Ali, son of late Kamaraddin Majhi, of Jagatpur, police-station Feni, district Noakhali, having applied to this Court for discharge under section 41 of the Provincial Insolvency Act, the 22nd May 1937 has been set down for hearing of the application.

S. K. SEN, District Judge.

Noakhali, the 21st April 1937. (894—1)

In the Court of the District Judge of Noakhali.

INSOLVENCY CASE No. 4 OF 1937.

NOTICE is hereby given that Mahammod Sayed, son of late Sarafat Ali Haji, of Kazirkhil, police-station Sandwip, district Noakhali, having applied to this Court for being adjudged an insolvent, the 22nd day of May 1937 has been set down for hearing of the application.

S. K. SEN, District Judge.

Noakhali, the 21st April 1937. (895—1)

In the Court of the District Judge of Pabna-Bogra.

INSOLVENCY CASE No. 6 OF 1937.

NOTICE is hereby given that one Jatindra Chandra Moitra, son of late Shyama Charan Moitra, of Karanja, police-station Santhia, district Pabna, has applied before this Court for an order of adjudication against his debtor Rafi Uddin Ahmed, son of late Basir Uddin Ahmed, of Ganpatdia, police-station Bera, district Pabna, and the 6th May 1937 has been set down for hearing of the case in this Court.

S. CHAKRABATTI, for District Judge.

Pabna, the 16th April 1937. (892—1)

In the Court of the District Judge of Rangpur.

INSOLVENCY CASE No. 2 OF 1937.

SITU MAMUD, son of late Fatu Mamud, of Hemerkuti, police-station Kurigram, in the district of Rangpur, was on the 17th April 1937 adjudged an insolvent by this Court. He is to apply for final discharge within six months.

S. C. CHAKRAVERTY, District Judge.

Rangpur, the 20th April 1937. (876—1)

In the Court of the District Judge of Rangpur.

INSOLVENCY CASE No. 6 OF 1937.

ON the application of the debtor Dubraj, son of late Garibulla Shekh, of Kamalabari Gerda Sankar, police-station Kaliganj, in Rangpur, for being adjudged an insolvent, the 8th day of May 1937 has been fixed for hearing the aforesaid petition and the examination of the debtor.

S. C. CHAKRAVERTY, District Judge.

Rangpur, the 20th April 1937. (877—1)

In the 4th Court of the Sub-Judge of 24-Parganas.

INSOLVENCY CASE No. 123 OF 1937.

Bhagirathi Khatik, cooly of Hajinagore Jute Mill, 24-Parganas, applicant.

To Dawan Singh of Titagar, post office Titagar, district 24-Parganas, creditor.

ON the 5th day of April 1937 it was ordered that the matter of the petition of the applicant be heard on the 14th day of May 1937, and that the said applicant do attend to be examined by this Court on that date.

T. C. MUKHERJEE, Sub-Judge.

Alipore, the 9th April 1937.

(833—1)

In the 4th Court of the Sub-Judge of 24-Parganas.

INSOLVENCY CASE No. 129 OF 1937.

Kali Prosad Dutt of 22, Rani Road, Paikpara, 24-Parganas, applicant.

To Dr. Prakash Chandra Mukherjee of 10, Pran Krista Mukherjee Road, post office Kassipore, Calcutta, and others, creditors.

ON the 12th day of April 1937 it was ordered that the matter of the petition of the applicant be heard on the 28th day of May 1937, and that the said applicant do attend to be examined by this Court on that date.

T. C. MUKHERJEE, Sub-Judge.

Alipore, the 15th April 1937.

(834—1)

In the 4th Court of the Sub-Judge of 24-Parganas.

INSOLVENCY CASE No. 130 OF 1937.

Mr. S. Dickinson of 9, Ismail Street, Entally, district 24-Parganas, applicant.

To Govinda Prosad and Sons of Asansol, district Burdwan, creditors.

ON the 5th day of April 1937 it was ordered that the matter of the petition of the applicant be heard on the 14th day of May 1937, and that the said applicant do attend to be examined by this Court on that date.

T. C. MUKHERJEE, Sub-Judge.

Alipore, the 9th April 1937.

(835—1)

In the 4th Court of the Sub-Judge of 24-Parganas.

INSOLVENCY CASE No. 131 OF 1937.

Abdul Hamid Halder of Kajirdanga, Garden Reach, thana Metiaburuz, district 24-Parganas, applicant.

To Narsingdas Agarwalla, Paharpur Road, Garden Reach post office, district 24-Parganas, creditor.

ON the 5th day of April 1937 it was ordered that the matter of the petition of the applicant be heard on the 14th day of May 1937, and that the said applicant do attend to be examined by this Court on that date.

T. C. MUKHERJEE, Sub-Judge.

Alipore, the 9th April 1937.

(836—1)

In the 4th Court of the Sub-Judge of 24-Parganas.

INSOLVENCY CASE No. 132 OF 1937.

Nexi Lal Poddar of Bhatpara, police-station Jagatdal, 24-Parganas, applicant.

To Nand Kishore Brahman of 11, Goenka Lane, Calcutta, and others, creditors.

ON the 7th day of April 1937 it was ordered that the matter of the petition of the applicant be heard on the 21st day of May 1937, and that the said applicant do attend to be examined by this Court on that date,

T. C. MUKHERJEE, Sub-Judge.

Alipore, the 9th April 1937.

(837—1)

In the 4th Court of the Sub-Judge of 24-Parganas.

INSOLVENCY CASE No. 134 OF 1937.

F. Clough, Assistant Station Master, Sealdah, 24-Parganas, applicant.

To Mahadeolal and Brothers of No. 1, Tikiapara Road, Howrah, and others, creditors.

ON the 9th day of April 1937 it was ordered that the matter of the petition of the applicant be heard on the 21st day of May 1937, and that the said applicant do attend to be examined by this Court on that date.

T. C. MUKHERJEE, Sub-Judge.

Alipore, the 10th April 1937.

(838—1)

In the 4th Court of the Sub-Judge of 24-Parganas.

INSOLVENCY CASE No. 135 OF 1937.

Manick Chandra Patra of Nandanpur, post office Budge Budge, 24-Parganas, applicant.

To Lallo Sing (Municipal Darwan) of D. N. Ghose Road, Budge Budge, 24-Parganas, and others, creditors.

ON the 9th day of April 1937 it was ordered that the matter of the petition of the applicant be heard on the 21st day of May 1937, and that the said applicant do attend to be examined by this Court on that date.

T. C. MUKHERJEE, Sub-Judge.

Alipore, the 10th April 1937.

(839—1)

In the 4th Court of the Sub-Judge of 24-Parganas.

INSOLVENCY CASE No. 137 OF 1937.

Kaychand Makhal of Setkalna, police-station Falta, district 24-Parganas, applicant.

To Sreenibash Mondal of Beldari, police-station Falta, district 24-Parganas, and others, creditors.

ON the 10th day of April 1937 it was ordered that the matter of the petition of the applicant be heard on the 21st day of May 1937, and that the said applicant do attend to be examined by this Court on that date.

T. C. MUKHERJEE, Sub-Judge.

Alipore, the 12th April 1937.

(840—1)

In the 4th Court of the Sub-Judge of 24-Parganas.

INSOLVENCY CASE No. 138 OF 1937.

Syed Latafat Hossain, residing at 68, Beckbagan Row, police-station Ballygunge, district 24-Parganas, applicant.

To Satish Chandra Dey of No. 5, Khetra Banerji Lane, Sibpore, Howrah, and others, creditors.

ON the 10th day of April 1937 it was ordered that the matter of the petition of the applicant be heard on the 21st day of May 1937, and that the said applicant do attend to be examined by this Court on that date.

T. C. MUKHERJEE, Sub-Judge.

Alipore, the 12th April 1937.

(841—1)

In the 4th Court of the Sub-Judge of 24-Parganas.

INSOLVENCY CASE No. 139 OF 1937.

Khagendra Nath Dewan of No. 20, Fullbagan Road, police-station Entally, district 24-Parganas, applicant.

To Surujmal Bahadur Mal of South Road, Entally, 24-Parganas, and others creditors.

ON the 10th day of April 1937 it was ordered that the matter of the petition of the applicant be heard on the 21st day of May 1937, and that the said applicant do attend to be examined by this Court on that date.

T. C. MUKHERJEE, Sub-Judge.

Alipore, the 12th April 1937.

(842—1)

In the 4th Court of the Sub-Judge of 24-Parganas.

INSOLVENCY CASE No. 140 OF 1937.

Panchu Gopal Ghose Khanru of Rahara, police-station Khardah, 24-Parganas, applicant.
To Madan Mohan Ghose of Barrackpore Sadar Bazar, post office Barrackpore, 24-Parganas, and others, creditors.

ON the 12th day of April 1937 it was ordered that the matter of the petition of the applicant be heard on the 28th day of May 1937, and that the said applicant do attend to be examined by this Court on that date.

T. C. MUKHERJEE, Sub-Judge.

Alipore, the 15th April 1937.

(843—1)

In the 4th Court of the Sub-Judge of 24-Parganas.

INSOLVENCY CASE No. 141 OF 1937.

Ban Samuel of Huge Road, Tangra, police-station Entally, Calcutta, applicant.
To Sher Md. Khan and another of 28B, Iron Gate Road, police-station Matiabruz, 24-Parganas, and others, creditors.

ON the 12th day of April 1937 it was ordered that the matter of the petition of the applicant be heard on the 28th day of May 1937, and that the said applicant do attend to be examined by this Court on that date.

T. C. MUKHERJEE, Sub-Judge.

Alipore, the 15th April 1937.

(844—1)

In the 4th Court of the Sub-Judge of 24-Parganas.

INSOLVENCY CASE No. 142 OF 1937.

Syed Noor Hossain of 11, Shamsul Huda Road, Calcutta, applicant.
To Satish Chandra De of 5, Kshetra Banerjee Lane, post office Shibpore, Howrah, and others, creditors.

ON the 12th day of April 1937 it was ordered that the matter of the petition of the applicant be heard on the 28th day of May 1937, and that the said applicant do attend to be examined by this Court on that date.

T. C. MUKHERJEE, Sub-Judge.

Alipore, the 15th April 1937.

(845—1)

In the 4th Court of the Sub-Judge of 24-Parganas.

INSOLVENCY CASE No. 143 OF 1937.

Nalini Kanta Chakraborty of Dewanbagan Lane, Mudiali Garden Reach, Matiabruz, 24-Parganas, applicant.
To Rahaman Khan Kabuli and another of Rajabagan, post office Garden Reach, 24-Parganas, and others, creditors.

ON the 12th day of April 1937 it was ordered that the matter of the petition of the applicant be heard on the 28th day of May 1937, and that the said applicant do attend to be examined by this Court on that date.

T. C. MUKHERJEE, Sub-Judge.

Alipore, the 15th April 1937.

(846—1)

In the 4th Court of the Sub-Judge of 24-Parganas.

INSOLVENCY CASE No. 144 OF 1937.

Sk. Sabu Saraing, residing at Ebrahim Road, Ekbalpur, district 24-Parganas, applicant.
To Abdul Kader Molla of Orphangunj Market, Room No. 12, and others, 24-Parganas, and others, creditors.

ON the 15th day of April 1937 it was ordered that the matter of the petition of the applicant be heard on the 28th day of May 1937, and that the said applicant do attend to be examined by this Court on that date.

T. C. MUKHERJEE, Sub-Judge.

Alipore, the 19th April 1937.

(847—1)

In the 4th Court of the Sub-Judge of 24-Parganas.

INSOLVENCY CASE No. 146 OF 1937.

Amrita Lal Dass, residing at 9/4, South Sinthi Road, thana Cossipore, district 24-Parganas, applicant.
To Raghunath Bairagi of No. 5, Raja Apurba Krishna Lane, post office Cossipore, district 24-Parganas, and others, creditors.

ON the 15th day of April 1937 it was ordered that the matter of the petition of the applicant be heard on the 28th day of May 1937, and that the said applicant do attend to be examined by this Court on that date.

T. C. MUKHERJEE, Sub-Judge.

Alipore, the 17th April 1937.

(848—1)

In the 4th Court of the Sub-Judge of 24-Parganas.

INSOLVENCY CASE No. 147 OF 1933.

Behary Lal Adhikari of Baonali, police-station Budge Budge, 24-Parganas, applicant.
To Banadeb Shing of Baonali, police-station Budge Budge, 24-Parganas, and others, creditors.

ON the 16th day of April 1937 it was ordered that the matter of the petition of the applicant be heard on the 28th day of May 1937, and that the said applicant do attend to be examined by this Court on that date.

T. C. MUKHERJEE, Sub-Judge.

Alipore, the 19th April 1937.

(849—1)

In the 4th Court of the Sub-Judge of 24-Parganas.

INSOLVENCY CASE No. 149 OF 1937.

Abu Shohab Md. Sohrub, residing at 15B, Shah Aman Lane, police-station Watgunge, district 24-Parganas, applicant.
To Mirbuksh Khan Kabuli and others of 39, Mominpur Road, Kidderpore, 24-Parganas, and others, creditors.

ON the 16th day of April 1937 it was ordered that the matter of the petition of the applicant be heard on the 28th day of May 1937, and that the said applicant do attend to be examined by this Court on that date.

T. C. MUKHERJEE, Sub-Judge.

Alipore, the 19th April 1937.

(850—1)

ORDER OF ADJUDICATION.

Section 27 of the Provincial Insolvency Act, V of 1920.

In the 4th Court of the Sub-Judge at Alipore.

INSOLVENCY APPLICATION No. 394 OF 1936.

PURSUANT to a petition, dated 22nd August 1936, filed by Mahammed Anwar Khan of 11/1, Ekbalpore Road, Kidderpore, Calcutta, debtor, and on the application of the debtor himself and on reading his application and hearing his pleader, it is ordered that the debtor be and the said debtor is hereby adjudged insolvent.

It is further ordered that the debtor do apply for his discharge by 17th November 1937.

Dated this 9th day of April 1937.

T. C. MUKHERJEE, Sub-Judge.

(851—1)

ORDER OF ADJUDICATION.

Section 27 of the Provincial Insolvency Act, V of 1920.

In the 4th Court of the Sub-Judge at Alipore.

INSOLVENCY APPLICATION No. 400 OF 1936.

PURSUANT to a petition, dated 25th August 1936, filed by Reginald William Stokoe of 114, Lower Range, police-station Ballygunge, 24-Parganas, debtor, and on the application of the debtor himself and on reading his application and hearing his pleader, it is ordered that the debtor be and the said debtor is hereby adjudged insolvent.

It is further ordered that the debtor do apply for his discharge by 17th November 1937.

Dated this 9th day of April 1937.

T. C. MUKHERJEE, Sub-Judge.

(852—1)

ORDER OF ADJUDICATION.

Section 27 of the Provincial Insolvency Act, V of 1920.

In the 4th Court of the Sub-Judge at Alipore.

INSOLVENCY APPLICATION No. 435 OF 1936.

PURSUANT to a petition, dated 16th September 1936, filed by Lalit Mohan Basack of 52, Tobin Road, Baranagar, 24-Parganas, debtor, and on the application of the debtor himself and on reading his application and hearing his pleader, it is ordered that the debtor be and the said debtor is hereby adjudged insolvent.

It is further ordered that the debtor do apply for his discharge by 17th November 1937.

Dated this 9th day of April 1937.

T. C. MUKHERJEE, Sub-Judge.
(853—1)

ORDER OF ADJUDICATION.

Section 27 of the Provincial Insolvency Act, V of 1920.

In the 4th Court of the Sub-Judge at Alipore.

INSOLVENCY APPLICATION No. 479 OF 1936.

PURSUANT to a petition, dated 8th October 1936, filed by Jatindra Mohan Mukherjee of 126, Linton Street, police-station Beniapukur, Calcutta, debtor, and on the application of the debtor himself and on reading his application and hearing his pleader, it is ordered that the debtor be and the said debtor is hereby adjudged insolvent.

It is further ordered that the debtor do apply for his discharge by 17th November 1937.

Dated this 9th day of April 1937.

T. C. MUKHERJEE, Sub-Judge.
(854—1)

ORDER OF ADJUDICATION.

Section 27 of the Provincial Insolvency Act, V of 1920.

In the 4th Court of the Sub-Judge at Alipore.

INSOLVENCY APPLICATION No. 508 OF 1936.

PURSUANT to a petition, dated 5th December 1936, filed by Sahadeo Chamar of Kanthalpara, Kamarhati, police-station Barahnagore, 24-Parganas, debtor, and on the application of the debtor himself and on reading his application and hearing his pleader, it is ordered that the debtor be and the said debtor is hereby adjudged insolvent.

It is further ordered that the debtor do apply for his discharge by 17th November 1937.

Dated this 9th day of April 1937.

T. C. MUKHERJEE, Sub-Judge.
(855—1)

ORDER OF ADJUDICATION.

Section 27 of the Provincial Insolvency Act, V of 1920.

In the 4th Court of the Sub-Judge at Alipore.

INSOLVENCY APPLICATION No. 512 OF 1936.

PURSUANT to a petition, dated 8th December 1936, filed by Girish Chandra Ghose of 3, Kali Kumar Banerjee's Lane, Tala, 24-Parganas, debtor, and on the application of the debtor himself and on reading his application and hearing his pleader, it is ordered that the debtor be and the said debtor is hereby adjudged insolvent.

It is further ordered that the debtor do apply for his discharge by 17th November 1937.

Dated this 9th day of April 1937.

T. C. MUKHERJEE, Sub-Judge.
(856—1)

ORDER OF ADJUDICATION.

Section 27 of the Provincial Insolvency Act, V of 1920.

In the 4th Court of the Sub-Judge at Alipore.

INSOLVENCY APPLICATION No. 524 OF 1936.

PURSUANT to a petition, dated 21st December 1936, filed by Mahabir Jha of 234/3, Lower Circular Road, Bhowanipore, Calcutta, debtor, and on the application of the debtor himself and on reading his application and hearing his pleader, it is ordered that the debtor be and the said debtor is hereby adjudged insolvent.

It is further ordered that the debtor do apply for his discharge by 17th November 1937.

Dated this 9th day of April 1937.

T. C. MUKHERJEE, Sub-Judge.
(857—1)

ORDER OF ADJUDICATION.

Section 27 of the Provincial Insolvency Act, V of 1920.

In the 4th Court of the Sub-Judge at Alipore.

INSOLVENCY APPLICATION No. 532 OF 1936

PURSUANT to a petition, dated 22nd December 1936, filed by Herombo Prosad Mukherjee of 7, Pran Nath Pandit Street, Bhowanipore, Calcutta, debtor, and on the application of the debtor himself and on reading his application and hearing his pleader, it is ordered that the debtor be and the said debtor is hereby adjudged insolvent.

It is further ordered that the debtor do apply for his discharge by 17th November 1937.

Dated this 9th day of April 1937.

T. C. MUKHERJEE, Sub-Judge.
(858—1)

ORDER OF ADJUDICATION.

Section 27 of the Provincial Insolvency Act, V of 1920.

In the 4th Court of the Sub-Judge at Alipore.

INSOLVENCY APPLICATION No. 25 OF 1937.

PURSUANT to a petition, dated 13th January 1937, filed by Mahamad Salim of 11, Watgunge Street, Kidderpore, Calcutta, debtor, and on the application of the debtor himself and on reading his application and hearing his pleader, it is ordered that the debtor be and the said debtor is hereby adjudged insolvent.

It is further ordered that the debtor do apply for his discharge by 17th November 1937.

Dated this 9th day of April 1937.

T. C. MUKHERJEE, Sub-Judge.
(859—1)

ORDER OF ADJUDICATION.

Section 27 of the Provincial Insolvency Act, V of 1920.

In the 4th Court of the Sub-Judge at Alipore.

INSOLVENCY APPLICATION No. 35 OF 1937.

PURSUANT to a petition, dated 25th January 1937, filed by Chandra Bhusan Singh of Matiaburuz, Dewanbagan Road, 24-Parganas, debtor, and on the application of the debtor himself and on reading his application and hearing his pleader, it is ordered that the debtor be and the said debtor is hereby adjudged insolvent.

It is further ordered that the debtor do apply for his discharge by 17th November 1937.

Dated this 9th day of April 1937.

T. C. MUKHERJEE, Sub-Judge.
(860—1)

ORDER OF ADJUDICATION.

Section 27 of the Provincial Insolvency Act, V of 1920.

In the 4th Court of the Sub-Judge at Alipore.

INSOLVENCY APPLICATION No. 39 OF 1937.

PURSUANT to a petition, dated 26th January 1937, filed by T. Fanthome of 6, Hazi Lane, Beniapooker, Calcutta, debtor, and on the application of the debtor himself and on reading his application and hearing his pleader, it is ordered that the debtor be and the said debtor is hereby adjudged insolvent.

It is further ordered that the debtor do apply for his discharge by 17th November 1937.

Dated this 9th day of April 1937.

T. C. MUKHERJEE, Sub-Judge.

(861—1)

ORDER OF ADJUDICATION.

Section 27 of the Provincial Insolvency Act, V of 1920.

In the 4th Court of the Sub-Judge at Alipore.

INSOLVENCY APPLICATION No. 45 OF 1937.

PURSUANT to a petition, dated 28th January 1937, filed by Sannyasi Parshi of Arakpore, police-station Tollygunge, 24-Parganas, debtor, and on the application of the debtor himself and on reading his application and hearing his pleader, it is ordered that the debtor be and the said debtor is hereby adjudged insolvent.

It is further ordered that the debtor do apply for his discharge by 17th November 1937.

Dated this 9th day of April 1937.

T. C. MUKHERJEE, Sub-Judge.

(862—1)

NOTICE TO CREDITORS OF APPLICATION FOR DISCHARGE.

Section 41 (1) of the Provincial Insolvency Act, V of 1920.

In the 4th Court of the Sub-Judge at Alipore.

INSOLVENCY CASE No. 477 OF 1935.

Methar Ram Das of No. 4 Bridge, police-station Tollygunge, 24-Parganas, applicant.

TAKE notice that the abovenamed insolvent has applied at the Court for his discharge, and that the Court has fixed the 14th day of May 1937 at 11 o'clock for hearing the application.

Dated this 6th day of April 1937.

T. C. MUKHERJEE, Sub-Judge.

(863—1)

NOTICE TO CREDITORS OF APPLICATION FOR DISCHARGE.

Section 41 (1) of the Provincial Insolvency Act, V of 1920.

In the 4th Court of the Sub-Judge at Alipore.

INSOLVENCY CASE No. 561 OF 1935.

Upendra Nath Patra and others of Mukundapur, police-station Diamond Harbour, 24-Parganas, applicants.

TAKE notice that the abovenamed insolvents have applied at the Court for their discharge, and that the Court has fixed the 28th day of May 1937 at 11 o'clock for hearing the application.

Dated this 16th day of April 1937.

T. C. MUKHERJEE, Sub-Judge.

(864—1)

NOTICE TO CREDITORS OF APPLICATION FOR DISCHARGE.

Section 41 (1) of the Provincial Insolvency Act, V of 1920.

In the 4th Court of the Sub-Judge at Alipore.

INSOLVENCY CASE No. 89 OF 1936.

Mrs. M. A. McIlwain of 146, L. Kaiser Street, Sealdah, 24-Parganas, applicant.

TAKE notice that the abovenamed insolvent has applied at the Court for her discharge, and that the Court has fixed the 28th day of May 1937 at 11 o'clock for hearing the application.

Dated this 19th day of April 1937.

T. C. MUKHERJEE, Sub-Judge.

(865—1)

NOTICE TO CREDITORS OF APPLICATION FOR DISCHARGE.

Section 41 (1) of the Provincial Insolvency Act, V of 1920.

In the 4th Court of the Sub-Judge at Alipore.

INSOLVENCY CASE No. 135 OF 1936.

Munneswar Jeswara of Nayabasti, Barrackpore, 24-Parganas, applicant.

TAKE notice that the abovenamed insolvent has applied at the Court for his discharge, and that the Court has fixed the 14th day of May 1937 at 11 o'clock for hearing the application.

Dated this 6th day of April 1937.

T. C. MUKHERJEE, Sub-Judge.

(866—1)

NOTICE TO CREDITORS OF APPLICATION FOR DISCHARGE.

Section 41 (1) of the Provincial Insolvency Act, V of 1920.

In the 4th Court of the Sub-Judge at Alipore.

INSOLVENCY CASE No. 151 OF 1936.

R. Anthoney of 6, Sha Aman Lane, police-station Ekbalpore (Calcutta), 24-Parganas, applicant.

TAKE notice that the abovenamed insolvent has applied at the Court for his discharge, and that the Court has fixed the 28th day of May 1937 at 11 o'clock for hearing the application.

Dated this 16th day of April 1937.

T. C. MUKHERJEE, Sub-Judge.

(867—1)

NOTICE TO CREDITORS OF APPLICATION FOR DISCHARGE.

Section 41 (1) of the Provincial Insolvency Act, V of 1920.

In the 4th Court of the Sub-Judge at Alipore.

INSOLVENCY CASE No. 153 OF 1936.

A. Francis of 6, Sha Aman Lane, police-station Ekbalpore, 24-Parganas, applicant.

TAKE notice that the abovenamed insolvent has applied at the Court for his discharge, and that the Court has fixed the 28th day of May 1937 at 11 o'clock for hearing the application.

Dated this 16th day of April 1937.

T. C. MUKHERJEE, Sub-Judge.

(868—1)

NOTICE TO CREDITORS OF APPLICATION FOR DISCHARGE.

Section 41 (1) of the Provincial Insolvency Act, V of 1920.

In the 4th Court of the Sub-Judge at Alipore.

INSOLVENCY CASE No. 178 OF 1936.

Abdul Majid of Shamnagore Garulia Cooly Line, Nawapara, 24-Parganas, applicant.

TAKE notice that the abovenamed insolvent has applied at the Court for his discharge, and that the Court has fixed the 21st day of May 1937 at 11 o'clock for hearing the application.

Dated this 10th day of April 1937.

T. C. MUKHERJEE, Sub-Judge.

(869—1)

NOTICE TO CREDITORS OF APPLICATION FOR DISCHARGE.

Section 41 (1) of the Provincial Insolvency Act, V of 1920.

In the 4th Court of the Sub-Judge at Alipore.

INSOLVENCY CASE No. 206 OF 1936.

Mohammad Khan of 6, Phulbagan Road, police-station Entally, 24-Parganas, applicant.

TAKE notice that the abovenamed insolvent has applied at the Court for his discharge, and that the Court has fixed the 21st day of May 1937 at 11 o'clock for hearing the application.

Dated this 9th day of April 1937.

T. C. MUKHERJEE, Sub-Judge.

(870—1)

NOTICE TO CREDITORS OF APPLICATION FOR DISCHARGE.

Section 41 (1) of the Provincial Insolvency Act, V of 1920.

In the 4th Court of the Sub-Judge at Alipore.

INSOLVENCY CASE No. 255 OF 1936.

Kali Charan Pal of Joy Krishna Ghosal Road, Eriadaha, 24-Parganas, applicant.

TAKE notice that the abovenamed insolvent has applied at the Court for his discharge, and that the Court has fixed the 21st day of May 1937 at 11 o'clock for hearing the application.

Dated this 9th day of April 1937.

T. C. MUKHERJEE, Sub-Judge.

(871—1)

NOTICE TO CREDITORS OF APPLICATION FOR DISCHARGE.

Section 41 (1) of the Provincial Insolvency Act, V of 1920.

In the 4th Court of the Sub-Judge at Alipore.

INSOLVENCY CASE No. 264 OF 1936.

Sayed Afsaruddin Ahamad alias M. A. Gani of 2, Tanti Bagan Road, 24-Parganas, applicant.

TAKE notice that the abovenamed insolvent has applied at the Court for his discharge, and that the Court has fixed the 21st day of May 1937 at 11 o'clock for hearing the application.

Dated this 9th day of April 1937.

T. C. MUKHERJEE, Sub-Judge.

(872—1)

NOTICE TO CREDITORS OF APPLICATION FOR DISCHARGE.

Section 41 (1) of the Provincial Insolvency Act, V of 1920.

In the 4th Court of the Sub-Judge at Alipore.

INSOLVENCY CASE No. 286 OF 1936.

Haripada Nandan of 36 E, Beni Nandan Street, Bhowanipore, 24-Parganas, applicant.

TAKE notice that the abovenamed insolvent has applied at the Court for his discharge, and that the Court has fixed the 21st day of May 1937 at 11 o'clock for hearing the application.

Dated this 9th day of April 1937.

T. C. MUKHERJEE, Sub-Judge.

(873—1)

NOTICE TO CREDITORS OF APPLICATION FOR DISCHARGE.

Section 41 (1) of the Provincial Insolvency Act, V of 1920.

In the 4th Court of the Sub-Judge at Alipore.

INSOLVENCY CASE No. 317 of 1936.

Sk. Md. Kazem of 76, Ashutosh Mukherjee Road, Bhowanipore, 24-Parganas, applicant.

TAKE notice that the abovenamed insolvent has applied at the Court for his discharge, and that the Court has fixed the 21st day of May 1937 at 11 o'clock for hearing the application.

Dated this 9th day of April 1937.

T. C. MUKHERJEE, Sub-Judge.

(874—1)

NOTICE TO CREDITORS OF APPLICATION FOR DISCHARGE.

Section 41 (1) of the Provincial Insolvency Act, V of 1920.

In the 4th Court of the Sub-Judge at Alipore.

INSOLVENCY CASE No. 342 OF 1936.

Jhoru Charan Mondal of 97/3, Narikeldanga Main Road, Beleghata, 24-Parganas, applicant.

TAKE notice that the abovenamed insolvent has applied at the Court for his discharge, and that the Court has fixed the 14th day of May 1937 at 11 o'clock for hearing the application.

Dated this 6th day of April 1937.

T. C. MUKHERJEE, Sub-Judge.

(875—1)

ORDER OF ADJUDICATION.

Section 27 of the Provincial Insolvency Act, V of 1920.

In the Court of the District Judge at Alipore.

INSOLVENCY APPLICATION No. 3 OF 1937.

PURSUANT to a petition, dated 2nd February 1937, filed by Satish Chandra Roy of 10/2, South Sealdah Road, Entally, 24-Parganas, debtor, and on the application of the debtor himself and on reading his application and hearing his pleader, it is ordered that the debtor be and the said debtor is hereby adjudged insolvent.

It is further ordered that the debtor do apply for his discharge by 4th April 1938.

Dated this 5th day of April 1937.

M. H. B. LETHBRIDGE, District Judge.

(879—1)

NOTICE TO CREDITORS OF APPLICATION FOR DISCHARGE.

Section 41 (1) of the Provincial Insolvency Act, V of 1920.

In the Court of the District Judge at Alipore.

INSOLVENCY CASE No. 37 OF 1934.

Harry Figg of 87, Barrackpur Road, Barrackpur, 24-Parganas, applicant.

TAKE notice that the abovenamed insolvent has applied at the Court for his discharge, and that the Court has fixed the 3rd day of May 1937 at 11 o'clock for hearing the application.

Dated this 16th day of April 1937.

M. H. B. LETHBRIDGE, District Judge.

(880—1)

NOTICE TO CREDITORS OF APPLICATION FOR DISCHARGE.

Section 41 (1) of the Provincial Insolvency Act, V of 1920.

In the Court of the District Judge at Alipore.

INSOLVENCY CASE No. 30 OF 1935.

Kesab Chandra Gupta of 14, Bipradas Street, Narkeldanga, 24-Parganas, applicant.

TAKE notice that the abovenamed insolvent has applied at the Court for his discharge, and that the Court has fixed the 10th day of May 1937 at 11 o'clock for hearing the application.

Dated this 16th day of April 1937.

M. H. B. LETHBRIDGE, District Judge.

(881—1)

ORDER OF ADJUDICATION.

Section 27 of the Provincial Insolvency Act, V of 1920.

In the Court of the District Judge at Alipore.

INSOLVENCY APPLICATION No. 31 OF 1936.

PURSUANT to a petition, dated 27th August 1936, filed by Guljari Lal alias Guljari Mal Patwari of Khardah Bazar, police-station Khardah, 24-Parganas, debtor, and on the application of the debtor himself and on reading his application and hearing his pleader, it is ordered that the debtor be and the said debtor is hereby adjudged insolvent.

It is further ordered that the debtor do apply for his discharge in twelve months from this date.

Dated this 12th day of April 1937.

M. H. B. LETHBRIDGE, District Judge.

(896—1)

In the Court of the District Judge of 24-Parganas.

INSOLVENCY CASE No. 13 OF 1937.

E. D. Bastien of 86, Loco Quarters, Narkeldanga, 24-Parganas, applicant.

To A. H. King, Chinaman Contractor, Darjeeling, and others, creditors.

ON the 20th day of April 1937 it was ordered that the matter of the petition of the applicant be heard on the 17th day of May 1937, and that the said applicant do attend to be examined by this Court on that date.

M. H. B. LETHBRIDGE, District Judge.

Alipore, the 21st April 1937.

(897—1)

In the Court of the District Judge of 24-Parganas.

INSOLVENCY CASE No. 12 OF 1937.

Purusottamdas Khandelwal of 61, Shambhu Babu Lane, police-station Beniapukur, 24-Parganas, applicant.

To Bhagabandas Agarwala of 5, Dalhousie Square, Calcutta, and others, creditors.

ON the 17th day of April 1937 it was ordered that the matter of the petition of the applicant be heard on the 17th day of May 1937 and that the said applicant do attend to be examined by this Court on that date.

M. H. B. LETHBRIDGE, District Judge.

Alipore, the 19th April 1937. (889—1)

ORDER ANNULLING ADJUDICATION.

Section 43 of the Provincial Insolvency Act, V of 1920.

In the 4th Court of the Sub-Judge at Alipore.

INSOLVENCY APPLICATION No. 556 OF 1935.

Gouri Sha, applicant.

WHEREAS Gouri Sha of 7, Justice Dwarkanath Road, Bhowanipore, 24-Parganas, debtor, does neither appear nor apply for discharge within the specified time, it is ordered that the order of adjudication, dated 2nd June 1936, against the debtor be and the same is hereby annulled.

Dated this 5th day of April 1937.

T. C. MUKHERJEE, Sub-Judge.

ORDER ANNULLING ADJUDICATION.

Section 43 of the Provincial Insolvency Act, V of 1920.

In the 4th Court of the Sub-Judge at Alipore.

INSOLVENCY APPLICATION No. 74 OF 1936.

Ganga Prosad Dobey, alias Baranashi, applicant.

WHEREAS Ganga Prosad Dobey of Kundu Lane, Belgachia, 24-Parganas, debtor, does neither appear nor apply for discharge within the specified time, it is ordered that the order of adjudication, dated 2nd June 1936, against the debtor be and the same is hereby annulled.

Dated this 5th day of April 1937.

T. C. MUKHERJEE, Sub-Judge.

ORDER ANNULLING ADJUDICATION.

Section 43 of the Provincial Insolvency Act, V of 1920.

In the 4th Court of the Sub-Judge at Alipore.

INSOLVENCY APPLICATION No. 198 OF 1936.

Sashi Bhuson Das, applicant.

WHEREAS Sashi Bhuson Das of 1/B, Sashtitola Road, Belgachia, 24-Parganas, debtor, does neither appear nor apply for discharge within the specified time, it is ordered that the order of adjudication, dated 2nd October 1936, against the debtor be and the same is hereby annulled.

Dated this 5th day of April 1937.

T. C. MUKHERJEE, Sub-Judge.

ORDER ANNULLING ADJUDICATION.

Section 43 of the Provincial Insolvency Act, V of 1920.

In the 4th Court of the Sub-Judge at Alipore.

INSOLVENCY APPLICATION No. 222 OF 1936.

Ibrahim Sareng, applicant.

WHEREAS Ibrahim Sareng of 7, Koyla Sarak, police-station Ekbalpore, 24-Parganas, debtor, does neither appear nor apply for discharge within the specified time, it is ordered that the order of adjudication, dated 5th October 1936, against the debtor be and the same is hereby annulled.

Dated this 5th day of April 1937.

T. C. MUKHERJEE, Sub-Judge.

ORDER ANNULLING ADJUDICATION.

Section 43 of the Provincial Insolvency Act, V of 1920.

In the 4th Court of the Sub-Judge at Alipore.

INSOLVENCY APPLICATION No. 233 OF 1936.

Mohammad Hanif, applicant.

WHEREAS Mohammad Hanif of 11, Bagmori Road, police-station Manicktola, 24-Parganas, debtor, does neither appear nor apply for discharge within the specified time, it is ordered that the order of adjudication, dated 9th October 1936, against the debtor be and the same is hereby annulled.

Dated this 9th day of April 1937.

T. C. MUKHERJEE, Sub-Judge.

ORDER ANNULLING ADJUDICATION.

Section 43 of the Provincial Insolvency Act, V of 1920.

In the 4th Court of the Sub-Judge at Alipore.

INSOLVENCY APPLICATION No. 274 OF 1936.

Ramu Dosad, applicant.

WHEREAS Ramu Dosad of 128, Shahab Bagan near Kalighat Tram Depot, debtor, does neither appear nor apply for discharge within the specified time, it is ordered that the order of adjudication, dated 5th October 1936, against the debtor be and the same is hereby annulled.

Dated this 5th day of April 1937.

T. C. MUKHERJEE, Sub-Judge.

ORDER ANNULLING ADJUDICATION.

Section 43 of the Provincial Insolvency Act, V of 1920.

In the 4th Court of the Sub-Judge at Alipore.

INSOLVENCY APPLICATION No. 289 OF 1936.

Bhagatram Mistry, applicant.

WHEREAS Bhagatram Mistry of Fatehpur, police-station Muchikhola, 24-Parganas, debtor, does neither appear nor apply for discharge within the specified time, it is ordered that the order of adjudication, dated 9th October 1936, against the debtor be and the same is hereby annulled.

Dated this 9th day of April 1937.

T. C. MUKHERJEE, Sub-Judge.

MR. SIBAKALI BAGCHI, M.A., B.L., intends to be enrolled as an Advocate of the High Court.

(831—4)

DHONESH CHANDRA MITRA, Pleader, desires to be enrolled as an Advocate of the High Court, Calcutta.

(743—4)

Federal Public Service Commission.

APPLICATIONS are invited for the post of Cattle Superintendent, Imperial Agricultural Research Institute, New Delhi. (2) Post permanent and pensionable. Probation two years. (3) Pay:—Rs. 200-215-(probationary period)-15-350-(efficiency bar)-20-650 (for persons who have been in continuous Government employ since 15th July 1931, Rs. 250-250-(probationary period)-300-20-600-(efficiency bar)-25-800). (4) Qualifications:—A degree or diploma in Veterinary Science with special knowledge of Veterinary Hygiene and Animal Genetics, evidence of capability to conduct research in cattle-breeding; at least three years' experience with a recognised pedigree dairy herd farm. Post-graduate training either at the Imperial Veterinary Research Institute, Muktesar, or in the Animal Breeding Research Department of the Edinburgh University or of any foreign Institute of repute will be considered an additional qualification. (5) Age not less than 30 and not more than 40. (6) Candidates must be British subjects of Indian domicile. Subjects of Indian States who have obtained declaration under section 262(i) of the Government of India Act, 1935, also eligible. (7) Government servants eligible, if permitted to apply by their Departments. Upper age limits may be relaxed in their favour. (8) Canvassing, in any form, will disqualify. (9) Candidates who applied for this post when it was advertised in January 1937, but were not selected, may apply again. (10) Last date for receipt of applications,

which must be on the prescribed form, 25th May 1937. Prescribed application forms and further particulars may be obtained from the Secretary, Federal Public Service Commission, Simla. Applicants for forms must mention the name of the post.

Simla, the 22nd April 1937. (908—1)

Federal Public Service Commission.

APPLICATIONS are invited for the post of Assistant Timber Development Officer, Class II, Forest Research Institute, Dehra Dun. (2) Post non-pensionable and temporary for two years in the first instance. Probation six months. Service terminable by six months' notice on either side. (3) Pay:—Rs. 250-20-750 plus a special pay of Rs. 100 for officers who entered service before 15th July 1931 (Rs. 75 for those who entered service after that date). (4) Qualifications:—(a) A degree or diploma in Civil Engineering recognised by the Institution of Engineers (India) for corporate membership, (b) Training in bridge design in a consulting engineer's office and actual bridge construction work (not necessary in the case of a Government servant if this sort of work has been a part of his official duties) and (c) Experience in bridge construction, including pile driving. As the person appointed will be employed also on propaganda work, he must have a good personality, be quick witted and persuasive. A flair for journalism desirable in addition. (5) Age not less than 28 and not more than 40. (6) Candidates must be British subjects. State subjects who have obtained a declaration under section 262(1) of the Government of India Act, 1935, also eligible. (7) Government servants eligible if permitted to apply by their Departments. If a Government servant holding permanent pensionable post is appointed, he will be allowed to retain his pensionary status. (8) Canvassing, in any form, will disqualify. (9) Last date for receipt of applications, which must be on the prescribed form, 25th May 1937. Application forms and further particulars may be obtained from the Secretary, Federal Public Service Commission, Simla. Applicants for forms must mention the name of the post.

Simla, the 20th April 1937. (909—1)

WANTED a Professor of English for a Government College in Bengal for about three months for the present with effect from 2nd July 1937, or any subsequent date on the rates of pay mentioned below:—

Age on appointment.			Pay. Rs.
30	...	...	400
31	...	...	450
32	...	...	450
33	...	...	500
34	...	...	500
35	...	...	550

Applicants should be British subjects and not less than 30 years of age. They must possess the highest academic qualifications and must have specialised in some branch of English language and literature.

Preference will be given to a person who has a successful record of teaching (especially in classes of University standing).

Canvassing in any form will be regarded as a disqualification.

Applications supported by documentary evidence of the qualifications possessed, and of age, should be submitted to the Assistant Director of Public Instruction, Bengal, Writers' Buildings, Calcutta, on or before the 15th May 1937.

WANTED the following temporary staff for the Eastern Circle. Three Estimators possessing the B.E. degree on Rs. 150 each per month. Applicants must have a good knowledge of reinforced concrete design especially bridge design. Three Estimators who are passed Overseers on Rs. 60 each per month, one Tracer on Rs. 40 and one Typist on Rs. 45 per month.

Applications stating qualifications, age and experience should reach the undersigned on or before the 4th May 1937.

F. H. HOGSHAW, Supdtg. Engr., Eastern Circle, Dacca (offg.).

WANTED an M.Sc. in Chemistry for the post of a Chemist for the Public Health Laboratory under the District Board of Jalpaiguri on Rs. 100—5—125—efficiency bar—7½—170. Preference will be given to one having practical training in any recognised Public Health Laboratory and who is thoroughly conversant with the analysis of notified foodstuffs under the Bengal Food Adulteration Act. Applications will be received by the undersigned till 4th May 1937.

JOYGOVINDA GUHA,

Chairman, District Board.

Jalpaiguri, the 22nd April 1937.

(893—1)

THE public are hereby informed that Mr. Jethalal Laxmichand Shah has severed his connection with and retired from the firm of Messrs. B. Roy Ojha & Co., Stock Brokers, of 11, Clive Street, Calcutta, and that the said Mr. Jethalal Laxmichand Shah has no authority to enter into any transaction or to realise any moneys for and on account of Messrs. B. Roy Ojha & Co.

Any person dealing with the said Mr. Jethalal Laxmichand Shah in connection with the business of Messrs. B. Roy Ojha & Co. shall do so at his own risk and the firm will not be bound by the same.

Dated the 16th day of April 1937.

MUKHERJEE & BISWAS,

Attorneys for B. Roy Ojha & Co.

(888—1)

Imperial Bank of India.

THE following appointments on the Bank's Staff are hereby notified:—

Mr. L. P. Kichlu, Staff Assistant, resumed charge of Howrah Branch as from the 11th April 1937, vice Mr. J. L. Bagga.

Mr. J. L. Bagga, Staff Assistant, to be Agent, Chandpur Branch, as from the 18th April 1937, vice Mr. S. M. Mukerjee.

B. A. C. NEVILLE,

Secretary and Treasurer.

Calcutta, the 21st April 1937. (891—1)

The Bengal and Madras Service Family Pension Fund which is provisionally managed and assisted by Government has for its object the provision of monthly pensions for the maintenance of the widows and children of subscribers and is open, with certain exceptions, to all active and pensioned members of the Uncovenanted service of Government (except those serving under the Government of Bombay), and to Local Fund servants earning pensions from Government. Some of the special features of the fund are (1) that widowed daughters incapable of re-marriage or children labouring under such mental or bodily infirmities as incapacitate them from earning their livelihood or preclude the possibility of marriage (in case of a daughter) are admitted to its benefits; and (2) that subscribers to the Widows' and Daughters' branches are entitled to a refund of 30 per cent. of the premia paid, should the nominee predecease them after five years of admission. The second quinquennial valuation of the Fund has been completed by the Actuary to the Government of India, and his report discloses very favourable results. For forms of application and rules of the Fund apply to the Accountant-General, Bengal, Imperial Secretariat Buildings, Calcutta.

Office of the Collector of Faridpur.

APPLICATIONS are invited for the post of Government Pleader, Faridpur.

(a) The post carries a monthly retainer of Rs. 75 and fees according to the rules in the Legal Remembrancer's Manual.

(b) Appointment shall be for a period of three years and may be renewed for further periods if the incumbent is found fit and efficient.

(c) Candidates of other than Faridpur district will submit testimonials which must include recommendations from the Sessions Judge or District Magistrate of the district in which they are practising.

(d) Canvassing, in any form, will disqualify a candidate.

(e) Applications to be submitted to the Magistrate-Collector, Faridpur, on or before the 7th May 1937.

B M. GHOSH, for Collector.

Faridpur, the 15th April 1937.

Lost.

THE Government Promissory Notes Nos. 110516, 105987, 111659 and 110407, for Rs. 10,000, 8,800, 5,000 and 4,000, of the 3 per cent. loan of 1896-97, respectively, originally standing in the name of Benimadhab Chaki, the proprietor, by whom they were never endorsed to any other person having been lost, notice is hereby given that the payment of the above notes and the interest thereupon have been stopped at the Public Debt Office, the Reserve Bank of India, Calcutta, and that application is about to be made for the issue of duplicates in favour of the proprietor. The public are cautioned against purchasing or otherwise dealing with the abovementioned securities.

Signature of the advertiser—Benimadhab Chaki.

Residence—Post office Naogaon, district Rajshahi (Bengal).

(912—3)

Lost.

THE Government Promissory Note No. 376540 of the 3½ per cent. loan of 1900-01 for Rs. 1,000, originally standing in the name of Ashutosh Mullick, the proprietor, by whom it was never endorsed to any other person, having been lost, notice is hereby given that payment of the above note and the interest thereupon have been stopped at the Public Debt Office, Reserve Bank of India, Calcutta, and that application is about to be made for the issue of duplicate in favour of the proprietor. The public are cautioned against purchasing or otherwise dealing with the abovementioned security.

Signature of the advertiser—Ashutosh Mullick.

Residence—Babugange, Hooghly.

(787—3)

Lost.

THE Government Promissory Note No. 117459 of the 3½ per cent. loan of 1900-01 for Rs. 500, originally standing in the name of Prosad Das Boral and Brothers, and last endorsed to Charuprasad Chatterjee (since deceased), the proprietor, by whom it was never endorsed to any other person, having been lost, notice is hereby given that payment of the above note and the interest thereupon have been stopped at the Public Debt Office, Reserve Bank of India, Calcutta, and that application is about to be made for the issue of duplicate in favour of Sm. Saralabala Debi. The public are cautioned against purchasing or otherwise dealing with the abovementioned security.

Signature of the advertiser—Saralabala Debi.

Residence—57/1, Puddapukur Road, Calcutta.

(789—3)

In the matter of the Indian Providend Insurance Society

and

In the matter of the Kalpataroo Providend Insurance Society, Gopalganj (in liquidation).

IT is hereby notified that the Kalpataroo Providend Insurance Society, Gopalganj, has been put into voluntary liquidation by its resolution in the extraordinary general meeting of the Directors, policyholders, held on 12th March 1937 at 2 p.m. at the Society's registered office at Gopalganj, and the undersigned has been appointed liquidator.

The creditors are requested to file their respective claims to the liquidator at the Society's office at Gopalganj in Faridpur on or before the 2nd May 1937, being the date for the creditors' meeting to be held at above address at 3 p.m., after which no claim will be admitted.

SASI BHUSAN BISWAS, Liquidator.

Gopalganj, Faridpur, the 10th April 1937.

(900—1)

In the matter of the Indian Companies Act, VII of 1913,

and

In the matter of the Sivitar Tea Co., Ltd. (in voluntary liquidation).

NOTICE is hereby given that a general meeting of the members of the abovenamed Company will be held on Saturday, the 5th day of June 1937, at 11 a.m. at No. 14, Old Court House Street, Calcutta, in order that there may be laid before the said Company an account showing the manner in which the winding up has been conducted and the property of the Company disposed of and to pass an extraordinary resolution as to the disposal of the books, accounts and documents of the Company and in order that the said Company may hear any explanation that may be given by the liquidators.

J. McFARLANE,
F. C. WILLIAMS,
Liquidators.

14, Old Court House Street, Calcutta, the 22nd April 1937.

(902—1)

In the matter of the Indian Companies Act, VII of 1913,

and

In the matter of the Mullootar Tea Co., Ltd. (in voluntary liquidation).

NOTICE is hereby given that a general meeting of the members of the abovenamed Company will be held on Saturday, the 5th day of June 1937, at 11-15 a.m. at No. 14, Old Court House Street, Calcutta, in order that there may be laid before the said Company an account showing the manner in which the winding up has been conducted and the property of the Company disposed of and to pass an extraordinary resolution as to the disposal of the books, accounts and documents of the Company and in order that the said Company may hear any explanation that may be given by the liquidators.

J. McFARLANE,
F. C. WILLIAMS,
Liquidators.

14, Old Court House Street, Calcutta, the 22nd April 1937.

(903—1)

In the matter of the Indian Companies Act

and

In the matter of the Khulna Rice Mills Co., Ltd. (in liquidation).

NOTICE is hereby given that an extraordinary meeting of the above Company will be held at Khulna on the 30th day of May 1937, at 3 o'clock, for the purpose of final meeting and dissolution of the Company

N. DAS, Liquidator.

Khulna, the 19th April 1937. (911—1)

SPECIAL ARRANGEMENTS.

Printing of the "Calcutta Gazette" of 13th May 1937.

OWING to Gazetted holiday on the 12th May 1937 on account of Coronation of His Majesty the King Emperor of India, the following special arrangements have been made for the printing of the "Calcutta Gazette" that will issue on the 13th May 1937:—

All MSS. of notifications, declarations, etc, that are to appear in Part I of the "Calcutta Gazette" will be received in the Press up to 5 p.m. on Friday, the 7th May 1937, and all proofs must be returned to Press by 1 p.m. on Monday, the 10th May 1937.

Advertisements, notices, etc., intended for publication in Part II of the "Calcutta Gazette" will be accepted in the Press up to 5 p.m. on Friday, the 7th May 1937, and all proofs must be returned and cost deposited by 1 p.m. on Monday, the 10th May 1937.

Proofs of all other matter must be returned to Press not later than 1 p.m. on Monday, the 10th May 1937.

C. R. BATTERSBY, M B E,
Supdt., Govt. Printing, Bengal.

Bengal Govt. Press, Alipore, the 27th April 1937.

Imperial Library

Secretariat Buildings, 6, Esplanade East, Calcutta. Open on—

Week days and Saturdays from 10 a.m. to 7 p.m.
Sundays and Gazetted holidays from 2 p.m. to 5 p.m.

THE Imperial Library is also a Lending Library. It is free to all except children. There is no subscription to pay.

K. M. ASADULLAH, Librarian.

CINCHONA FACTORY PRODUCTS.

By order of the Government of Bengal Cinchona Factory Products as manufactured and packed at the Cinchona Factory, Mungpoo, Darjeeling district, will be sold and distributed by the Superintendent of the **Presidency Jail**, *in original packages* as received from the Mungpoo Factory, at the rates herein noted **from the 1st May 1926** :—

Name of drug.	Price per lb. in powder form.			Price in 5 grain tablets.			
	For 60 lbs. and upwards.	For 6 lbs. and over but less than 60 lbs.	For any quantity less than 6 lbs.	1,000 tablets.	500 tablets.	250 tablets.	Price by weight per lb.
	Taken at a time.						
	Rs.	Rs.	Rs.	Rs.	Rs. a.	Rs. a.	Rs.
Quinine Bisulphate ..	18	19	20	16	8 0	4 4	..
" Hydrobromide ..	23	24	25	20	10 0	5 4	..
" Bihydrobromide ..	26	27	28	23	11 8	6 0	..
" Salicylate ..	24	25	26	..	..	..	..
" Tannate ..30 per cent. 35 per cent.	14	15	16	..	..	..	14

N.B.—Packing free in tins, sizes 1 lb., 8 oz. and 4 oz. only Packing in bottles or smaller sizes of tins extra.

Quinine Sulphate.

For 60 lbs. and upwards at a time .. Rs. 18 per lb.
For 6 lbs. and over but less than 60 lbs. at a time .. .. .. " 19 "
For any quantity less than 6 lbs. .. " 20 "

Crude Quinine Sulphate Powder .. Rs. 14 per lb.
Crude Quinine Sulphate Tablets .. " 12-8 "
Will be sold to Government departments, local authorities, hospitals, dispensaries and missionaries in the Bengal area of distribution.

Totaquina.

Irrespective of quantity .. Rs. 13-8 per lb.
For sale to hospitals and dispensaries in Bengal, Bihar, Orissa and Assam.

Quinine Hydrochloride.

For 60 lbs. and upwards at a time .. Rs. 23 per lb.
For 6 lbs. and over but less than 60 lbs. at a time .. .. .. " 24 "
For any quantity less than 6 lbs. .. " 25 "

Quinine Di-Hydrochloride.

For 60 lbs. and upwards at a time .. Rs. 25 per lb.
For 6 lbs. and over but less than 60 lbs. at a time .. .. .. " 26 "
For any quantity less than 6 lbs. .. " 27 "

Quinidine Sulphate.

For 60 lbs. and upwards at a time .. Rs. 20 per lb.
For 6 lbs. and over but less than 60 lbs. at a time .. .. .. " 21 "
For any quantity less than 6 lbs. .. " 22 "

Cinchonidine Sulphate.

For 60 lbs. and upwards at a time .. Rs. 25 per lb.
For 6 lbs. and over but less than 60 lbs. at a time .. .. .. " 26 "
For any quantity less than 6 lbs. .. " 27 "

Cinchonine Sulphate.

For 60 lbs. and upwards at a time .. Rs. 12 per lb.
For 6 lbs. and over but less than 60 lbs. at a time .. .. .. " 13 "
For any quantity less than 6 lbs. .. " 14 "

*Cinchona Febrifuge (Powder).

For 60 lbs. and upwards at a time .. Rs. 9 per lb.
For 6 lbs. and over but less than 60 lbs. at a time .. .. .. " 9 "
For any quantity less than 6 lbs. .. " 10 "

*Cinchona Febrifuge (Tablets).

For 60 lbs. and upwards at a time .. Rs. 10 per lb.
For 6 lbs. and over but less than 60 lbs. at a time .. .. .. " 10 "
For any quantity less than 6 lbs. .. " 11 "

Supply of Cinchona Febrifuge to all authorised indenters will be rationed in the proportion of 1½ of Cinchona Febrifuge to 1 of Quinine Sulphate at their existing prescribed prices.

Cinchona Bark (in 50 pound original bags).

Per bag .. .. .. Rs. 25.

4 grains Quinine Tablets.

Rs.	a.	
2	8	per box of 200 tablets (for Bengal and other provinces).
15	8	per lb.

5 grains Quinine Tablets.

Rs.	a.	
15	8	per lb. sold in 1 lb., ½ lb. and ¼ lb. tins.

5 grains Quinine Hydrochloride Tablets.

Rs.	a.	
20	0	per 1,000 tablets.
10	0	" 500 "
5	4	" 250 "

Packing free in tins, sizes 1 lb., 8 oz. and 4 oz. only. Packing in bottles or smaller sizes in tins extra.

5 grains Quinine Bihydrochloride Tablets.

Rs.	a.	
22	0	per 1,000 tablets.
11	0	" 500 "
6	0	" 250 "

Packing free in tins, sizes 1 lb., 8 oz. and 4 oz. only. Packing in bottles or smaller sizes in tins extra.

Transit charges extra in every case.

Quinine and Cinchona products will be sold by the Presidency Jail to (*a*) Local Governments and departments of Local Governments, (*b*) dispensaries and hospitals belonging to or managed by Local Governments and local authorities, (*c*) Municipalities, District Boards, Railways, Union Boards and other local authorities otherwise than for purposes of sale to the public, (*d*) Missions, (*e*) Government Medical Store Depot, Calcutta.

Provinces other than Bengal, Bihar, Orissa and Assam will get their supplies of Sulph. Quinine and Cinchona Febrifuge Powder and Tablets from the Director, Botanical Survey of India, Sibpur, Howrah.

Local sale at the jail gate from 10 a.m. to 3-30 p.m.

The system of payment is by—*Cash in advance*—by "*Treasury Challans*," "*Remittance Transfer Receipts*" or crossed "*Cheques*."

Indents unaccompanied by cash in advance will be sent Value Payable Post. Credit sale is not allowed except under special circumstances.

In the case of *Government officers* payments will be recovered by *Book Transfer, i.e., Countersigned Invoices*, in the event of *Cash* not accompanying the indent by "*Treasury Challans*," *Remittance Transfer Receipt or Cheque*.

2. Price and postage must accompany the price of the drug (when the drug is required by post).

The name of the Railway and Steamer Station or Post Office must be written distinctly when the parcels are required by Rail, Steamer or by Post. Railway parcels are sent by passenger train only.

A scale of postage is given below.

	1 oz.	2 ozs.	4 ozs.	¼ lb.	½ lb.	1 lb.
	As.	As.	As.	As.	As.	Rs. A.
Quinine Sulph. ..	..	..	7	7	11	0 11
Cinchona Feb. ..	..	..	7	7	11	0 11
Cinchona Feb. Tablets	..	..	7	7	11	0 11
Quinine Hydrochlor. ..	5	5	7	7	..	0 11
Quinine Di-hydrochlor.	5	5	7	7	..	0 11
Quinine Tablets ..	..	..	7	7	11	0 11
Totaquina ..	..	..	7	7	11	0 11

	1¼ lb.	2 lb.	3 lb.	4 lb.	5 lb.	6 lb.
	Rs. A.	Rs. A.	Rs. A.	Rs. A.	Rs. A.	Rs. A.
Quinine Sulph. ..	0 15	1 3	1 7	1 15	2 7	2 11
Cinchona Feb. ..	0 15	0 15	1 7	1 11	2 3	2 7
Cinchona Feb. Tablets	0 15	1 3	1 11	1 15	2 7	2 15
Quinine Hydrochlor. ..	0 15	1 3	1 7	1 15	2 7	2 11
Quinine Di-hydrochlor.	0 15	0 15	1 7	1 11	2 3	2 7
Quinine Tablets ..	0 15	0 15	1 7	1 11	1 15	2 3
Totaquina ..	0 15	1 3	1 7	1 15	2 7	2 11

Two different drugs are not packed in the same parcel and postage must be paid separately for each kind.

N.B.—Postage stamps are not accepted as revenue.

Government reserve the right to alter the price without notice.

NOW ON SALE

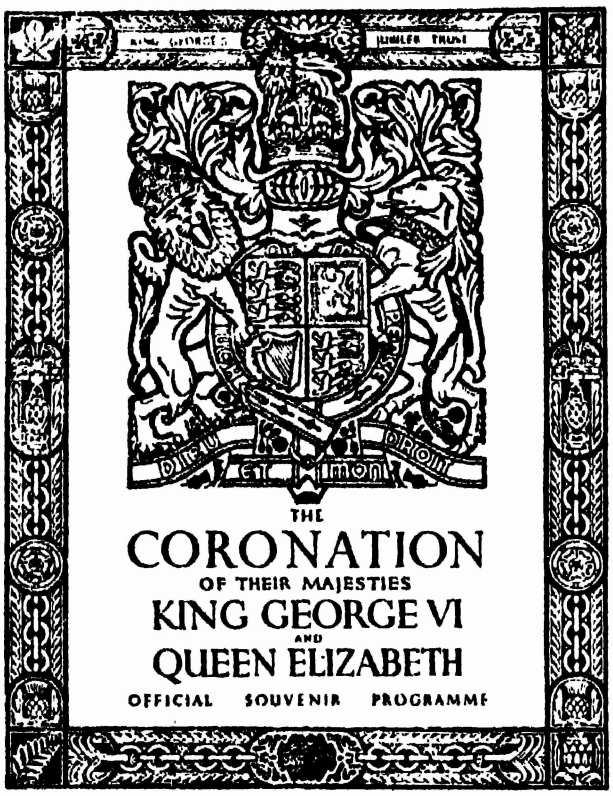

THE Official Coronation Programme specially produced for His Majesty's subjects overseas is now on sale at newsagents and booksellers. There are thirty-two pages of text and beautiful illustrations, and the cover is printed in full colours and gold making an attractive souvenir.

The contents include:—

Foreword by H.R.H. THE DUKE OF GLOUCESTER. Special photographs of THEIR MAJESTIES THE KING AND QUEEN, QUEEN MARY, PRINCESS ELIZABETH and PRINCESS MARGARET. "A PRAYER FOR THE KING'S REIGN," by the Poet Laureate. "THE KING'S MAJESTY," by John Drinkwater. Description of the Procession and Pictorial Map of the Route. The full text of the Coronation Service in Westminster Abbey, with an introduction by his Grace the Lord Archbishop of Canterbury. An illustrated explanation of the Ceremonial. Genealogical Table showing the descent of the Crown.

The programme is a complete guide to the broadcast ceremonies, and will be treasured as a lasting record of the Coronation of Their Majesties King George VI and Queen Elizabeth. Secure your copy to-day.

THE OFFICIAL SOUVENIR

CORONATION PROGRAMME

PRICE IN INDIA—Rs. 1/4/-

By Gracious Permission of His Majesty, the Programme is issued by King George's Jubilee Trust.

Registered No. C207

The Calcutta Gazette

THURSDAY, APRIL 29, 1937.

PART V

Acts of the Indian Legislature assented to by the Governor-General and Ordinances promulgated under section 72 of the Government of India Act.

GOVERNMENT OF INDIA.

Legislative Department.

The following Act of the Indian Legislature received the assent of the Governor-General on the 24th February, 1937, and is hereby promulgated for general information :—

ACT No. I OF 1937.

An Act to provide for the grading and marking of agricultural produce.

WHEREAS it is expedient to provide for the grading and marking of agricultural produce ; It is hereby enacted as follows :—

Short title and extent.

1. (*1*) This Act may be called the Agricultural Produce (Grading and Marking) Act, 1937.

(*2*) It extends to the whole of British India, including British Baluchistan and the Sonthal Parganas but excluding Burma.

Explanations.

2. In this Act, unless the contrary appears from the subject or context,—

(*a*) "agricultural produce" includes all produce of agriculture or horticulture and all articles of food or drink wholly or partly manufactured from any such produce, and fleeces and the skins of animals ;

(*b*) "counterfeit" has the meaning assigned to that word by section 28 of the Indian Penal Code ; XLV of 1860.

(c) "covering" includes any vessel, box, crate, wrapper, tray or other container;

(d) "grade designation" means a designation prescribed as indicative of the quality of any scheduled article;

(e) "grade designation mark" means a mark prescribed as representing a particular grade designation;

(f) "quality", in relation to any article, includes the state and condition of the article;

(g) "prescribed" means prescribed by rules made under this Act;

(h) "scheduled article" means an article included in the Schedule; and

(i) an article is said to be marked with a grade designation mark, if the article itself is marked with a grade designation mark or any covering containing or label attached to such article is so marked.

Prescription of grade designations.

3. The Governor General in Council may, after previous publication by notification in the Gazette of India, make rules—

(a) fixing grade designations to indicate the quality of any scheduled article;

(b) defining the quality indicated by every grade designation;

(c) specifying grade designation marks to represent particular grade designations;

(d) authorising a person or a body of persons, subject to any prescribed conditions, to mark with a grade designation mark any article in respect of which such mark has been prescribed or any covering containing or label attached to any such article;

(e) specifying the conditions referred to in clause (d) including in respect of any article conditions as to the manner of marking, the manner in which the article shall be packed, the type of covering to be used, and the quantity by weight, number or otherwise to be included in each covering;

(f) providing for the payment of any expenses incurred in connection with the manufacture or use of any implement necessary for the reproduction of a grade designation mark or with the manufacture or use of any covering or label marked with a grade designation mark; and

(g) providing for the confiscation and disposal of produce marked otherwise than in accordance with the prescribed conditions with a grade designation mark.

Penalty for unauthorised marking with grade designation mark.

4. Whoever marks any scheduled article with a grade designation mark, not being authorised to do so by rule made under section 3, shall be punishable with fine which may extend to five hundred rupees.

Penalty for counterfeiting grade designation mark.

5. Whoever counterfeits any grade designation mark or has in his possession any die, plate or other instrument for the purpose of counterfeiting a grade designation mark shall be punishable with imprisonment which may extend to two years, or with fine, or with both.

Extension of application of Act.

6. The Governor General in Council, after such consultation as he thinks fit of the interests likely to be affected, may by notification in the Gazette of India declare that the provisions of this Act shall apply to an article of agricultural produce not included in the Schedule, and on the publication of such notification such article shall be deemed to be included in the Schedule.

THE SCHEDULE.

(*See section 2.*)

1. Fruit.
2. Vegetables.
3. Eggs.
4. Dairy produce.
5. Tobacco.
6. Coffee.
7. Hides and Skins.

J. D. ANDERSON,

Secy to the Govt. of India (offg.).

GOVERNMENT OF INDIA.

Legislative Department.

The following Act of the Indian Legislature received the assent of the Governor General on the 13th March, 1937, and is hereby promulgated for general information :—

ACT No. XIII OF 1937.

An Act further to amend the Indian Tea Cess Act, 1903, for a certain purpose.

WHEREAS it is expedient further to amend the Indian Tea Cess Act, 1903, for the purpose of securing that the said Act should cease to be in force in Burma ; It is hereby enacted as follows :— IX of 1903.

Short title.

1. This Act may be called the Indian Tea Cess (Amendment) Act, 1937.

Amendment of section 1, Act IX of 1903.

2. To sub-section (2) of section 1 of the Indian Tea Cess Act, 1903, the words " and Burma " shall be added. IX of 1903.

G. H. SPENCE,

Secy. to the Govt. of India.

GOVERNMENT OF INDIA.

Legislative Department.

The following Act of the Indian Legislature received the assent of the Governor General on the 13th March, 1937, and is hereby promulgated for general information :—

ACT No. XIV OF 1937.

An Act further to amend the Indian Limitation Act, 1908, for a certain purpose.

WHEREAS it is expedient further to amend the Indian Limitation Act, 1908, for the purpose hereinafter appearing ; It is hereby enacted as follows :— IX of 1908.

Short title.

1. This Act may be called the Indian Limitation (Amendment) Act, 1937.

Amendment of Article 149, First Schedule to Act IX of 1908.

2. In Article 149 in the First Division of the First Schedule to the Indian Limitation Act, 1908, to the entry in the first column the following words shall be added, namely :— IX of 1908.

"except a suit before the Federal Court in the exercise of its original jurisdiction".

G. H. SPENCE,

Secy. to the Govt. of India.

Registered No. C207

The Calcutta Gazette

THURSDAY, APRIL 29, 1937.

PART VI

Bills introduced in the Council of State and Legislative Assembly, Reports of Select Committees presented to the Council and Assembly, and Bills published under Rule 18 of the Indian Legislative Rules.

GOVERNMENT OF INDIA.

Legislative Assembly Department.

The following Bill was introduced in the Legislative Assembly on the 15th March, 1937:—

L. A. BILL No. 18 OF 1937.

A Bill further to amend the Indian Oaths Act, 1873, for a certain purpose.

WHEREAS it is expedient further to amend the Indian Oaths Act, 1873, for the purpose hereinafter appearing ; It is hereby enacted as follows :— X of 1873.

Short title.

1. This Act may be called the Indian Oaths (Amendment) Act, 1937.

Amendment of section 5. Act X of 1873.

2. In section 5 of the Indian Oaths Act, 1873, after the word "jurors" the following proviso shall be inserted, namely :— X of 1873.

"Provided that where the witness is a child under twelve years of age, and the Court or person having authority to examine such witness is of opinion that he does not understand the nature of an oath or affirmation, the foregoing provisions of this section and the provisions of section 6 shall not apply to such witness, but in any such case the absence of an oath or affirmation shall not render inadmissible any evidence given by such witness nor affect the obligation of the witness to state the truth."

STATEMENT OF OBJECTS AND REASONS.

Sections 5 and 6 of the Indian Oaths Act, 1873, make it obligatory upon all persons who may be lawfully examined or may give evidence to make an oath or affirmation, and section 118 of the Indian Evidence Act, 1872, makes only such persons competent to testify who are not prevented from understanding questions put to them and from giving rational answers to those questions by reason of tender years, etc. The combined effect of these provisions is that, unless in the opinion of the Court the tender years of a child appearing as a witness prevent him from understanding the questions put to him and from giving rational answers, he is a competent witness and must be sworn. The English Law—section 38 of the Children and Young Persons Act, 1933—provides for the contingency, not recognised by the Indian law, of a child being possessed of sufficient intelligence to justify the reception of his evidence, and understanding the duty of speaking the truth but not understanding the nature of an oath. The principle of the English law is considered more sound. The Bill proposes to bring the Indian law in its application to both civil and criminal proceedings into conformity with the English law by inserting a proviso to section 5 of the Indian Oaths Act.

H. D. CRAIK.

NEW DELHI;
The 7th March, 1937.

MD. RAFI,
Secy. to the Govt. of India.

GOVERNMENT OF INDIA.

Legislative Assembly Department.

The following Bill was introduced in the Legislative Assembly on the 15th March, 1937:—

L. A. BILL No. 19 OF 1937.

A Bill to amend the Law of Evidence with respect to certain commercial documents.

WHEREAS it is expedient to amend the Law of Evidence with respect to certain commercial documents ; It is hereby enacted as follows :—

Short title and extent.

1. (*1*) This Act may be called the Commercial Documents Evidence Act, 193 .

(*2*) It extends to the whole of British India.

Admissibility of certain statements as evidence.

2. Nothwithstanding anything contained in the Indian Evidence Act, 1872, a statement in any document included in the Schedule as to any fact in issue or relevant fact shall be admissible for the purposes of that Act as evidence of such fact. I of 1872.

Presumption as to genuineness of documents.

3. Notwithstanding anything contained in the Indian Evidence Act, 1872, a Court shall for the purposes of that Act presume that any document purporting to be a document included in the Schedule and to have been duly made by or under the appropriate authority was so made and that the statements contained therein are accurate. I of 1872.

Power of Governor General to alter Schedule.

4. The Governor General in Council may, by notification in the Gazette of India, direct that any document shall be added to or removed from the Schedule ; and upon such direction being made the Schedule shall be deemed to be amended accordingly.

THE SCHEDULE.

(*See* sections 2, 3 and 4.)

1. Lloyd's Register of Shipping.
2. Lloyd's Daily Shipping Index.
3. Lloyd's List and Shipping Gazette.
4. Lloyd's Loading List.
5. Lloyd's Weekly Casualty Reports.
6. Certificate of delivery of goods to the Manchester Ship Canal Company.
7. Official log book, Supplementary Official log book and official wireless log kept by a British or foreign ship.
8. General average statement prepared by an Average Adjuster employed by a Marine Insurance Company.
9. Certificate of sea-worthiness of a ship granted by the Government of the country to which the ship belongs or from which the ship sailed or by a person or persons authorised by such Government to issue such certificate or by a duly authorised surveyor to a classification society recognised by the Government of the country to which the ship belongs or from which the ship sailed.

10. *Force majeure* certificate issued by a Chamber of Commerce, a Trade Association or an association representing an established industry recognised by the Government of the country concerned as competent to issue such certificate.

11. Certificate of Registry, Safety Certificate, Safety Radio-Telegraphy Certificate, Exemption Certificate, Certificate of Survey, International Load Line Certificate, British India Load Line Certificate, Report of Survey, of a ship provisionally detained as unsafe, Report of survey to be served upon the Master of a ship declared unsafe upon survey, Survey Report issued by a competent authority in respect of cargo loaded, Survey Report issued by a competent authority certifying the quantity of coal loaded, Survey Report issued by a competent authority in respect of the security of hatches.

12. Certificates A and B issued under the Indian Merchant Shipping Act, 1923.

13. Dock certificate, dock chalan, dock receipt or warrant, Port Warehouse certificate or warrant, issued by or under the authority of a Port, Dock, Harbour or Wharfage authority.

14. Certificate issued by a Port, Dock, Harbour, Wharfage or other authority having control of acceptance of goods for shipping transport or delivery, relating to the date or time of shipment of goods, arrival of goods for acceptance, arrival of vessels, or acceptance or delivery of goods or to the allocation of berthing accommodation to vessels.

15. Export Application issued by a port authority showing dues paid, weight and measurement and the shutting out of a consignment.

16. Certificate or receipt showing the weight or measurement of a consignment issued by the official measurer of the Conference Lines, or by a sworn or licensed measurer, or by a Chamber of Commerce, or other authority recognised by the Government of the country concerned as competent to issue such certificate or receipt.

17. Storage warrant of a warehouse recognised by a Customs, Excise, Port, Dock, Harbour or Wharfage authority.

18. Receipt for payment of customs duty issued by a Customs authority.

19. Customs or Excise pass and Customs or Excise permit or certificate, issued by a Customs or Excise authority.

20. Consular certificate in respect of goods shipped or shut out, consular certificates of origin, and consular invoice.

21. Certificate issued by a Railway or Steamship company or Transport company, relating to the booking or shipment of goods.

22. Receipt of a Railway, Steamship or Transport company granted to a consignor in acknowledgment of goods entrusted to the company for transport.

23. Printed or lithographed reports and publications issued by a Customs House or Port authority showing the movements of vessels and certificates issued by such bodies relating to such movements.

24. Printed or lithographed reports and publications issued by a Chamber of Commerce, Trade Association, Exchange Bank Association or Stock Exchange recognised by the Government of the country concerned, showing the market

rate of goods the prices of bullion, stocks, shares or securities, the rates of exchange and currency, bank rates, freight rates, the sailings and movements of vessels and details of exports and imports and certificates relating to any of these items issued by such bodies.

25. Certificate of origin of goods issued by a Chamber of Commerce or other authority designated for the purpose by the Government of the country from which the goods were shipped or by a British or Indian Consular officer or Trade Commissioner.

26. Arbitration award made by arbitrators appointed in accordance with any law for the time being in force and certificates relating to any such award issued by a Chamber of Commerce or other authority recognised by the Government of the country concerned as competent to issue such certificates.

27. Register of Trade Marks kept by a Chamber of Commerce or other authority recognised by the Government of the country concerned as competent to maintain a record of trade and property marks ; and certificates from such bodies showing that trade or property mark has been registered with them in accordance with rules and regulations governing such registration.

28. Certificate issued by a Chamber of Commerce or other authority recognised in this behalf by the Government of the country concerned relating to the quality, size or weight of any goods, count of yarn or percentage of moisture in yarn and other goods.

29. Printed schedule issued by a Port, Dock, Harbour, Wharfage or Warehouse authority or by a Railway, or Transport company, showing fees, dues, freights or other charges for the storage, transport and other services in connection with goods.

30. Printed tonnage schedule and schedule of fees, commission or other charges for services rendered, issued by a Chamber of Commerce or a Trade Association or an association representing an established industry.

31. The publication known as the Indian Railway Conference Association and Goods Tariff and General Rules for Acceptance, Carriage and Delivery of Goods.

32. Charter Party and Bill of Lading.

33. Bill of Exchange.

34. Bank draft, a Banker's letter of credit, a Banker's intimation that an instrument has been honoured or dishonoured, and a receipt granted by a Banker.

35. Receipt granted by a Post Office.

36. Acknowledgment receipt granted by a Port, Dock, Harbour, Wharfage or Warehouse authority or by a Railway, Steamship or Transport company.

37. An acknowledgment receipt granted by a Chamber of Commerce or a Trade Association or an association representing an established industry.

38. Printed copy of the memorandum or the articles of association of a company registered under the Indian Companies Act, 1913.

39. Balance Sheet and audit report of a company, registered under the Indian Companies Act, 1913, when duly certified by a person entitled to act as an auditor of companies under section 144 of that Act and the rules made thereunder or under sub-section (2) of section 3 of the Indian Companies (Amendment) Act, 1930, and the rules made thereunder.

40. The following documents relating to Marine insurance, namely, insurance policy, receipt for premium, certificate of insurance and insurance cover note.

41. Certificate concerning the loss of country craft issued by the appropriate authority under Department of Commerce Mercantile Marine Department Circular No. 3 of 1932.

42. Protest noting and certifying the dishonour of a bill of exchange and protest by a master of a ship relating to circumstances calculated to affect the liability of the ship-owner made before a Notary Public or other duly authorised official.

43. Declaration made under the provisions of the Statutory Declarations Act, 1835 (5 and 6 Will. 4 c. 63).

STATEMENT OF OBJECTS AND REASONS.

Certain commercial documents of various kinds are by the practice of merchants accepted as evidence and taken as *prima facie* correct, but in a Court of law they cannot, in the absence of consent by the parties, be admitted in evidence without testimony as to their genuineness or the correctness of the statements made therein. Such documents are not admissible in evidence under section 32 or any other provision of the Indian Evidence Act, 1873, without further proof. The result is that a party desirous of delaying the proceedings can often insist on the other side getting Commissions issued to take evidence as to facts which are for all practical purposes sufficiently established by the documents in question. It is proposed to undertake legislation on the lines of the Bankers Books Evidence Act, 1891, so as to provide that commercial documents which are accepted as *prima facie* correct in commercial circles may be admitted in evidence without formal proof. A list of such documents has been prepared in consultation with Commercial Associations and Local Governments, and is included in the Schedule to the Bill, power being reserved to the Government of India to add to the list from time to time and to remove items from it.

H. D. CRAIK.

NEW DELHI;
The 8th March, 1937.

MD. RAFI,
Secy. to the Govt. of India.

Registered No. C207

Appendix to

The Calcutta Gazette

THURSDAY, APRIL 29, 1937.

General Jury List

Common Jury List

List of persons liable to serve on common Juries in the High Court of Judicature at Fort William in Bengal for the year ensuing from 1st May 1937 pursuant to Act V of 1898.

Remarks.—Errors in names and descriptions can be corrected on communication to the Office of the Clerk of the Crown. Persons claiming exemptions should communicate their claims and grounds thereof to the Clerk of the Crown as soon as possible after service of the summons, and persons summoned and unable to attend for any cause should state such cause, so that if sufficient cause is shown, the Sheriff may be directed to summon other Jurymen.

No.	Names.	Style or calling.	Residence or place of business.	Religion.
	A			
1	Abraham, E	Measurer, Bengal Chamber of Commerce	2, Clive Street	Christian
2	Abraham, S D	Inspector, Agency Department, E B R	3, Kaylaghat Street	Jew
3	Acaster, Alfred George	Assistant, Bengal Chamber of Commerce	2, Clive Street	Christian
4	Adams, G B	Sub-Accountant, Grindlay & Co, Ltd	6, Church Lane	ditto
5	Adams, James Aloysius	Assistant, J B Norton & Sons, Ld	Norton Buildings	ditto
6	Adamson, G A	Assistant, Mackinnon, Mackenzie & Co	16, Strand Road	ditto
7	Adelaide, G E	Assistant, Mackinnon, Mackenzie & Co	8, Strand Road	ditto
8	Ager, Eric Frank	Offg Asstt Superintendent, Operating Department, E I R	E I R House	ditto
9	Aitkins, K P	Measurer, Bengal Chamber of Commerce	2, Clive Street	ditto
10	Albert, Desmond	Assistant, Mackenzie Lyall & Co	5, Mission Row	ditto
11	Alcock, R	Salesman, Alfred Herbert (India), Ld	13-3, Strand Road	ditto
12	Allan, William O	Assistant, Lionel Edwards, Ld	D-1, Clive Buildings	ditto

13	Ambrose, G S	Contract Engineer, Associated Electrical Industries (India), Ld	A-3, Clive Buildings	ditto
14	Ames, Oswald Clarke	Assistant, Duncan Brothers & Co, Ld	101, Clive Street	ditto
15	Anania, Terence George	Assistant, D J Keymer & Co, Ld	4, Lyons Range	ditto
16	Anderson, D K	Sub-Accountant, Mercantile Bank of India, Ld	8, Clive Street	ditto
17	Anderson, J J	Assistant, J Thomas & Co	8, Mission Row	ditto
18	Anderson, John Chaplain	Assistant, W T Henley's Telegraph Works Co, Ld	Old Court House Corner	ditto
19	Anderson, J P	Mercantile Assistant, Dunlop Rubber Co (India), Ld	42, Free School Street	ditto
20	Anderson, R J	Assistant, Lionel Edwards, Ld	D-1, Clive Buildings	ditto
21	Andree, Ambrosa Lorenz	Journalist, *Statesman*, Ld	Statesman House	ditto
22	Andrew, Thomas Harold	Sub-Director of Programmes, all India Radio	1, Garstin Place	ditto
23	Andrew, W E	Assistant, J Thomas & Co	8, Mission Row	ditto
24	Andrews, E T	Assistant, McLeod & Co	28, Dalhousie Square	ditto
25	Andrews, L	Assistant, Roberts McLean & Co, Ld	101, Clive Street	ditto
26	Andrews, Percival Thomas	Assistant, Samuel Fitze & Co, Ld	26, Chowringhee	ditto
27	Angus, R MacGillivray	Assistant, Roberts McLean & Co, Ld	101, Clive Street	ditto
28	Anstiss, Leslie Herbert	Assistant, North British & Mercantile Insurance Co, Ld	101-1, Clive Street	ditto
29	Apcar, G J	Assistant, Heatly & Gresham, Ld	6, Waterloo Street	ditto
30	Aquilina, Frank	Assistant, Grahams Trading Co (India), Ld	6, Lyons Range	ditto

No.	Names.	Style or calling.	Residence or place of business.	Religion.
31	Aquilina, John C	Assistant, Grahams Trading Co (India), Ld	6, Lyons Range	Christian
32	Arakie, David	Assistant, Thorne's Ld	13, Ezra Street	ditto
33	Archard, P W	Assistant, Barry & Co	2, Fairlie Place	ditto
34	Archer, G W	Measurer, Bengal Chamber of Commerce	2, Clive Street	ditto
35	Archer, W R	Assistant, Calcutta Claims Bureau	26, Dalhousie Square	ditto
36	Armstrong, Ernest	Engineer Representative, The Mirrlees Watson Co, Ld	28, Grosvenor House	ditto
37	Armstrong, G L	Assistant, Caledonian Insurance Co	8, Clive Street	ditto
38	Arnold, J N	Assistant, Geo Henderson & Co, Ltd	101-1, Clive Street	ditto
39	Arratoon, A E	Assistant, Lovelock & Lewes	4, Lyons Range	ditto
40	Arratoon, E L	Teacher, Armenian College and Philanthropic Academy	39, Free School Street	ditto
41	Arton, G O	Assistant, James Finlay & Co, Ld	1, Clive Street	ditto
42	Ashmead, W K	Assistant, Standard Vacuum Oil Co	6, Church Lane	ditto
43	Atherton, Frederick George	Assistant, G Atherton & Co (Eastern), Ld	8, Clive Street	ditto
44	Atherton, John Bramall	Assistant, G Atherton & Co (Eastern), Ld	8, Clive Street	ditto
45	Atkinson, Albert Allan	Salesman, C C Wakefield & Co, Ld	7, Royal Exchange Place	ditto
46	Atkinson, T C	Assistant, Turner, Morrison & Co, Ld	6, Lyons Range	ditto
47	Augustin, H	Overseer, P S Office, E I R	E I R House	ditto
48	Augustin, N A	Assistant, Shaw, Wallace & Co	4, Bankshall Street	ditto
49	Austin, C	Claims Inspector, Traffic Department, E B R	3, Kaylaghat Street	ditto

50	Averley, E	Works Foreman, Heatly & Gresham, Ld	6, Waterloo Street	ditto
51	Aviet, E E	Assistant, Shaw, Wallace & Co	4, Bankshall Street	ditto
52	Ayling, C A	Assistant, Dunlop Rubber Co (India), Ld	42, Free School Street	ditto
	B			
53	Bacon, John Edward	Foreman, W Newman & Co, Ld	3, Old Court House Street	Christian.
54	Badelow, W J	Assistant, Balmer, Lawrie & Co, Ld	103, Clive Street	ditto
55	Bagnall, E V	Measurer, Bengal Chamber of Commerce	2, Clive Street	ditto
56	Baikie, Alexander Banks	Assistant Accountant, National Bank of India, Ld	104, Clive Street	ditto
57	Bailey, J A	Assistant, Roberts McLean & Co, Ld	101, Clive Street	ditto
58	Bailey, W E	Assistant, G E C (India), Ld	Magnet House, Chittaranjan Avenue, South.	ditto
59	Balcombe, L W	Assistant, Turner, Morrison & Co, Ld	6, Lyons Range	ditto
60	Baldassari, A E	Assistant, I G N & Ry Co, Ld	4, Fairlie Place	ditto
61	Bampton, Clement	Master, St Xavier's College	30, Park Street	ditto
62	Banes, George	Assistant, Whiteaway Laidlaw & Co, Ld	7, Chowringhee	ditto
63	Bannerman, James Meiklejohn	Salesman, Lyall Marshall & Co	4, Fairlie Place	ditto
64	Banyard, Peter	Assistant, Begg, Dunlop & Co, Ld	2, Hare Street	ditto
65	Baptist, J M	Clerk, C M's Office, E I R	E I R House	ditto

No.	Names.	Style or calling.	Residence or place of business.	Religion.
66	Baptiste, Dennis Vincent	Assistant, Hoare Miller & Co, Ld	5, Fairlie Place	Christian
67	Baptiste, Edwin	Assistant, Ranken & Co, Ld	4, Old Court House Street	ditto
68	Barclay, Ian Campbell	Assistant, Macneill & Co	2, Fairlie Place	ditto
69	Barke, J H	Assistant, Ivan Jones, Ld	8, Dalhousie Square, East	ditto
70	Barlow, C	Measurer, Bengal Chamber of Commerce	2, Clive Street	ditto
71	Barlow, W E	Measurer, Bengal Chamber of Commerce	2, Clive Street	ditto
72	Barnabas, M	Clerk, C M E's Office, E I R	E I R House	ditto
73	Barnes, H L	Assistant, Lovelock & Lewes	4, Lyons Range	ditto
74	Barnet, John Allan	Assistant, King Bros	102, Clive Street	ditto
75	Barrett, Eric Lancelot	Bookseller, W Newman & Co, Ld	3, Old Court House Street	ditto
76	Barrett, H C	Engineer, Hindusthan Engineering & Construction Co	10, Hastings Street	ditto
77	Barry, Charles Victor	Assistant, Standard Vacuum Oil Co	6, Church Lane	ditto
78	Basil, Nefton Arratoon	Assistant, Mulcott Belting Co, Ld	10, Government Place, East	ditto
79	Bassett, B T	Accountant, Cutler Palmer & Co	10, Government Place, East	ditto
80	Batchelor, Geo F F	Assistant, James Luke & Sons	7, Royal Exchange Place	ditto
81	Bateman, C R	Measurer, Bengal Chamber of Commerce	2, Clive Street	ditto

82	Batra, F C	Assistant, Balmer Lawrie & Co, Ld	103, Clive Street	ditto
83	Batten, H A	Assistant Accountant, G E C (India), Ld	Magnet House, Central Avenue, South.	ditto
84	Battye, Harold	Assistant, Lovelock & Lewes	4, Lyons Range	ditto
85	Baxendine, John Young	Assistant Accountant, National Bank of India, Ld	104, Clive Street	ditto
86	Baxter, Ronald Ian	Artist, D J Keymer & Co, Ld	4, Lyons Range	ditto
87	Beadle, W W	Assistant, Macmillan & Co, Ld	294, Bowbazar Street	ditto
88	Beadon, J R H	Sub-Accountant, Mercantile Bank of India, Ld	8, Clive Street	ditto
89	Beard, Frederick Hugh	Showroom Manager, C E S C, Ld	Victoria House	ditto
90	Beath, D	Sub-Accountant, Chartered Bank of India, Australia & China	1-1, Clive Street	ditto
91	Beattie, James	Assistant, Balmer Lawrie & Co, Ld	103, Clive Street	ditto
92	Bebbington, H	Engineer, Chloride Elec Storage Company, Ld	4, Lyons Range	ditto
93	Beddoe, Robert Reginald	Assistant, Cox and Kings (Agents), Ld	5, Bankshall Street	ditto
94	Beedie, H	Assistant, J Thomas & Co	8, Mission Row	ditto
95	Begbie, F W (Capt)	Assistant, I G N & Ry Co, Ld	4, Fairlie Place	ditto
96	Begbie, Ralph Arnold	Assistant, Macneill & Co	2, Fairlie Place	ditto
97	Behura, Nathaniel	Meter-Reader Inspector, C E S C, Ld	Victoria House	ditto
98	Belchambers, G E	Clerk, Calcutta Mint	47, Strand Road	ditto
99	Belchambers, John Smeal	Assistant, Cox and Kings (Agents), Ld	5, Bankshall Street	ditto
100	Bell, Arthur Duncan	Assistant, W T Henley's Telegraph Works, Ld	Old Court House Corner	ditto

No.	Names.	Style or calling.	Residence or place of business.	Religion.
101	Bell, A B	Sub-Accountant, Mercantile Bank of India, Ld	8, Clive Street	Christian
102	Bell, J J C	Exporter and Importer, J J C Bell & Co	9, Clive Street	ditto
103	Bellety, B	Assistant, Accountant-General's Office, Bengal	Treasury Buildings	ditto
104	Bellety, G F	Assistant, Turner, Morrison & Co, Ld	6, Lyons Range	ditto
105	Belletty, Stanislaus Rideout	Head Clerk, Royal Calcutta Turf Club	11, Russell Street	ditto
106	Bennett, Edmund Thomas Randolph	Accountant, Cutler, Palmer & Co	10, Government Place East	ditto
107	Bent, John Philip Howard	Assistant, Begg, Dunlop & Co, Ld	2, Hare Street	ditto
108	*Beresford, D'Souza Valentine	Assistant, T E Thomson & Co, Ld	9, Esplanade East	ditto
109	Berry, J	Assistant, Turner, Morrison & Co, Ld	6, Lyons Range	ditto
110	Bett, A M	Assistant, Jute Industries, Ld	1A, Hare Street	ditto
111	Bevan, K W	Assistant, Lovelock & Lewes	4, Lyons Range	ditto
112	Biber, Alfred Marsden	Assistant, T E Thomson & Co, Ld	9, Esplanade East	ditto
113	Billane, John Michael	Assistant, Dunlop Rubber Co (India), Ld	42, Free School Street	ditto
114	Billon, H E	Assistant, Barry & Co	2, Fairlie Place	ditto
115	Binyon, J B	Assistant, Hall & Anderson, Ld	31, Chowringhee	ditto
116	Birch, George	Engineer, Linotype & Machinery, Ld	21, Bowbazar Street	ditto
117	Birch, Joseph James Netheriel	Assistant, Army & Navy Stores, Ld	41, Chowringhee	ditto
118	Bird, Herbert	Assistant, Macneill & Co	2, Fairlie Place	ditto
119	Bischoff, Gerald	Service Stn Manager, Walford Transport, Ld	71-73, Park Street	ditto

120	Blacker, C W	Draftsman, C M E's Office, E I R	E I R House	ditto
121	Blackford, Edward George	Boiler Inspector	40-1A, Free School Street	ditto
122	Blackwell, J H	Marcantile Assistant, Dunlop Rubber Co. (India), Ld.	42, Free School Street	ditto
123	Blake, E P	Job Analysis Inspector, D A O's Office, E I R	E I R House	ditto
124	Blake, J H	Superintendent, Landing & Shipping, B I S N Co, Ld	8, Strand Road	ditto
125	Blake, Lionel Alfred	Assistant, T E Thomson & Co, Ld	9, Esplanade, East	ditto
126	Blake, P F	Assistant, Associated British Machine Tool Makers, Ld	6, Old Post Office Street	ditto
127	Blanche, Charles Lionel	Engineer, Greaves Cotton & Co, Ld	60, Dharamtala Street	ditto
128	Blenkiron, Benjamin	Assistant, Burmah Shell Co of India, Ld	Hongkong House	ditto
129	Blizzard, M W	Assistant, Standard Vacuum Oil Co	6, Church Lane	ditto
130	Bloud, A F	Measurer, Bengal Chamber of Commerce	2, Clive Street	ditto
131	Boase, E R	Sub-Accountant, Lloyds Bank, Ld	101-1, Clive Street	ditto
132	Bogaars, A E	Assistant, Balmer, Lawrie & Co, Ld	103, Clive Street	ditto
133	Bolst, Harold	Stenographer, Boots Pure Drug Co, Ld	10, Lal Bazar Street	ditto
134	Bomford, B C M	Assistant, D L Millar & Co, Ld	28, Dalhousie Square, West	ditto
135	Bonner, V E Peace	Assistant, Balmer Lawrie & Co, Ld	103, Clive Street	ditto
136	Borthwick, S G	Assistant Accountant, Port Commissioners' Office	Strand Road	ditto

No.	Names.	Style or calling.	Residence or place of business.	Religion
137	Bottrill, Maurice Edward	Sub-Accountant, Grindlay & Co, Ld	6, Church Lane	Christian
138	Bourke, J W Neal	Assistant, Place Siddons & Gough	6, Lyons Range	ditto
139	Bower, R H	Assistant, Imperial Chemical Industries (India), Ld	18, Strand Road	ditto
140	Bowman, Edward	Publicity Clerk, C C M's Office, E I R	E I R House	ditto
141	Boyce, G M	Sub-Accountant, Lloyds Bank, Ld	101-1, Clive Street	ditto
142	Boyd, A	Engineer, W & T Avery, Ld	11, Crooked Lane	ditto
143	Bradburn, George	Assistant, Whiteaway, Laidlaw & Co, Ld	7, Chowringhee	ditto
144	Bradley, J M	Assistant, Mackinnon Mackenzie & Co	16, Strand Road	ditto
145	Braganza, Manuel Anthony	Clerk, Prudential Assurance Co, Ld	Clive Buildings	ditto
146	Bray, R P	Assistant, Jardine, Skinner & Co	4, Clive Row	ditto
147	Bretherick, F	Assistant, Remington Rand, Inc	3, Council House Street	ditto
148	Brewester, F, F R S A	Handwriting Expert	6, Hastings Street	ditto
149	Bridge, Francis	Assistant, General Accident, Fire & Life Assurance Corpn, Ld	7, Hare Street	ditto
150	Brierley, Walter Harry	Assistant, G D Peters (India), Ld	10, Clive Street	ditto
151	Brims, James	Collection Manager, The British India Publishing Co	Stephen House	ditto
152	Brindley, E C	Loading Supervisor, I G N & Ry Co, Ld	Armenian Ghat	ditto

153	Brindley, P W	Assistant Artist Engraver, Calcutta Mint	47, Strand Road	ditto
154	Brock, Edwin Harold	Assistant Manager, Baldwin Locomotive Works	5, Dalhousie Square	ditto
155	Brodie, Ernest Dingwarr	Assistant, Sinclair & Co	5, Commercial Buildings	ditto
156	Brooks, Eric Stanley	Assistant, South British Insurance Co, Ld	5, Clive Street	ditto
157	Brooks, J H	Assistant, Mather & Platt, Ld	7, Hare Street	ditto
158	Broom, Maurice Henry	Assistant, D J Keymer & Co, Ld	4, Lyons Range	ditto
159	Broughton, C	Assistant, Grahams Trading Co (India), Ld	6, Lyons Range	ditto
160	Brown, A B	Assistant, Ranken & Co, Ld	4, Old Court House Street	ditto
161	Brown, A W	Measurer, Bengal Chamber of Commerce	2, Clive Street	ditto
162	Brown, C C	Assistant, Balmer Lawrie & Co, Ld	103, Clive Street	ditto
163	Brown, Edward	Head Assistant, Office of the Inspector-General of Prisons, Bengal	Writers' Buildings	ditto
164	Brown, J A Campbell	Surveyor, Norman, Stewart & Co	9, Clive Street	ditto
165	Brown, N K	Assistant, Jessop & Co, Ld	93, Clive Street	ditto
166	Bryan, J E	Assistant, Imperial Bank of India	Strand Road	ditto
167	Bryden, William Donald	Assistant, Bengal Chamber of Commerce	2, Clive Street	ditto
168	Brydges, Charles	Assistant, Ralli Bros, Ld	16, Hare Street	ditto

No	Names.	Style or calling.	Residence or place of business.	Religion.
169	Bryson, Archibold Jordon Steuart	Assistant, Blackwood Bryson & Co, Ld	2, Mangoe Lane	Christian
170	Bryson, David Gillespie	Assistant, Blackwood Bryson & Co, Ld	2, Mangoe Lane	ditto
171	Buchan, Walter	Superintendent of Circulation, *Statesman*, Ld	Statesman House	ditto
172	Buike, E C	Measurer, Bengal Chamber of Commerce	2, Clive Street	ditto
173	Buike, O R	Measurer, Bengal Chamber of Commerce	2, Clive Street	ditto
174	Bull, Allen Henry	Salesman, Army and Navy Stores, Ld	41, Chowringhee	ditto
175	Bull, H C	Measurer, Bengal Chamber of Commerce	2, Clive Street	ditto
176	Burbridge, R	Assistant, Burn & Co, Ld	12, Mission Row	ditto
177	Burgess, Percy Cyril	Stenographer, Army and Navy Stores, Ld	41, Chowranghee	ditto
178	Burke, Albert Reginald	Assistant, D J Keymer & Co, Ld	4, Lyons Range	ditto
179	Burns, L G	Assistant, Balmer, Lawrie & Co, Ld	103, Clive Street	ditto
180	Burrows, R J	Measurer, Bengal Chamber of Commerce	2, Clive Street	ditto
181	Burtenshaw, Leslie Williams	Architect, Martin & Co	12, Mission Row	ditto
182	Butcher, P L	Assistant, Hall & Anderson	31, Chowringhee	ditto
183	Byrne, Rowland Wilmot	Assistant, Gillanders, Arbuthnot & Co	8, Clive Street	ditto

184	Byron, Geoffrey	Assistant Accountant, Lloyds Bank, Ld	41, Chowringhee	ditto
185	Bywater, Newelyn	Assistant, Burmah Shell Co of India, Ld	Hongkong House	ditto

C

186	Cabral, L E	Measurer, Bengal Chamber of Commerce	2, Clive Street	Christian
187	Cairns, A C	Architect, Mackintosh Burn, Ld	8, Clive Street	ditto
188	Calder, James McBeath	Assistant, Macneill & Co	2, Fairlie Place	ditto
189	Cameron, J	Traffic Assistant, Calcutta Tramways Co, Ld	7, Church Lane	ditto
190	Campbell, H F	Assistant, Imperial Chemical Industries (India), Ld	18, Strand Road	ditto
191	Cantopher, G C	Dy Bullion Registrar, Calcutta Mint	47, Strand Road	ditto
192	Carapiet, C W	Foreman, G Rogers & Co	5, Dalhousie Square, East	ditto
193	Carapiet, N	Store-keeper, Geo Henderson & Co, Ld	101-1, Clive Street	ditto
194	Carpenter, E C	Assistant, Ranken & Co, Ld	4, Old Court House Street	ditto
195	Carrie, J	Assistant, Barry & Co	2, Fairlie Place	ditto
196	Carruthers, C	Assistant, Hall & Anderson, Ld	31, Chowringhee	ditto
197	Carson, H D	Assistant, Turner, Morrison & Co, Ld	6, Lyons Range	ditto
198	Carter, John	Assistant, Army & Navy Stores, Ld	41, Chowringhee	ditto

No.	Names.	Style or calling.	Residence or place of business.	Religion.
199	Carter, Lancelot James	Assistant, C E S C, Ld	Victoria House	Christian
200	Carter, William George	Assistant, A & J Main & Co, Ld	10, Clive Street	ditto
201	Carvalho, Matthew Joseph	Engineer, F & C Osler, Ld	12, Old Court House Street	ditto
202	Carvey, P G	Measurer, Bengal Chamber of Commerce	2, Clive Street	ditto
203	Cashmore, G L	Sub-Accountant, Grindlay & Co, Ld	6, Church Lane	ditto
204	Castellari, Edwin Alfred	Assistant, J & R Hutchison, Ld	29, Waterloo Street	ditto
205	Castle, Norman	Assistant, Whiteaway, Laidlaw & Co, Ld	7, Chowranghee	ditto
206	Cattell, E. H.	Assistant Accountant, Lloyds Bank, Ld	101-1, Clive Street	ditto
207	Catto, William Ewan	Assistant, Andrew Yule & Co, Ld	8, Clive Row	ditto
208	Champness, F B	Engineer, G E C (India), Ld	Magnet House, Chittaranjan Avenue South.	ditto
209	Chaplin, Hugh Archie	Assistant, Ralli Bros, Ld	16, Hare Street	ditto
210	Charlton, Cyril	Accountant, T E Thomson & Co, Ld	9, Esplanade, East	ditto
211	Chew, O A	Assistant, Grahams Trading Co (India), Ld	6, Lyons Range	ditto
212	Chiodetti, J S	Assistant, Turner, Morrison & Co, Ld	6, Lyons Range	ditto
213	Clare, John Arnold	Assistant, Ralli Bros, Ld	16, Hare Street	ditto

214	Churcher, Philip Stanley	Accountant, Duncan Bros & Co, Ld	101, Clive Street	ditto
215	Churchill, J G	Sub-Accountant, Chartered Bank of India, Australia & China	1-1, Clive Street	ditto
216	Clark, D A S	Engineer, Greaves Cotton & Co, Ld	60, Dharamtala Street	ditto
217	Clark, John Hutchison	Assistant, Landale & Clark, Ld	11, Clive Street	ditto
218	Clark, L A	Assistant, Jessop & Co, Ld	93, Clive Street	ditto
219	Clark, W A	Assistant, McLeod & Co	28, Dalhousie Square	ditto
220	Clarkeson, John R	Assistant, Lionel Edwards, Ld	D-1, Clive Buildings	ditto
221	Clelend, D P, BSc, AIC	Assistant, Ivan Jones, Ld	8, Dalhousie Square, East	ditto
222	Clemens, K R	Assistant, Macmillan & Co, Ld	294, Bowbazar Street	ditto
223	Clemenson, Bertram Charles	Assistant, C E S C, Ld	Victoria House	ditto
224	Cliff, Henry	Sales Manager, Walford Transport, Ld	71-73, Park Street	Jew
225	Cliff, Joseph	Salesman, Walford Transport, Ld	71-73, Park Street	ditto
226	Cockburn, T S	Sub-Accountant, Chartered Bank of India, Australia & China	1-1, Clive Street	Christian
227	Coelho, Colin Agair	Assistant, Burmah Shell Co of India, Ld	Hongkong House	ditto
228	Coelho, Dossu Clifton	Assistant, Alfred, Herbert (India), Ld	13-3, Strand Road	ditto
229	Coelho, F	Salesman, Dunlop Rubber Co (India), Ld	42, Free School Street	ditto

No.	Names.	Style or calling.	Residence or place of business.	Religion.
230	Coelho, Fredrick James	Deputy Secretary, Calcutta Trades Association	34, Dalhousie Square	Christian
231	Coelho, P B	Measurer, Bengal Chamber of Commerce	2, Clive Street	ditto
232	Coffey, F W	Assistant, Imperial Chemical Industries (India), Ld	18, Strand Road	ditto
233	Cohen, Aaron Arakie	Assistant, Anderson Wright & Co	22, Strand Road	Jew
234	Cohen, Joe Abraham	Assistant, E D Sassoon & Co, Ld	101, Clive Street	ditto
235	Cohen, Sassoon	Salesman, English Electric Co, Ld	D-4, Clive Street	ditto
236	Cohen, Shalome Simon Duck	Reader, Caledonian Printing Co, Ld	3, Wellesley Place	ditto
237	Coker, C M	Assistant, Macneill & Co	2, Fairlie Place	Christian
238	Colby, S R	Assistant, B I S N Co, Ld	8, Strand Road	ditto
239	Coldwell, Newcomb Spence	Assistant, James Finlay & Co, Ld	1, Clive Street	ditto
240	Coles, B L H	Assistant, Turner, Morrison & Co, Ld	6, Lyons Range	ditto
241	Collier, Leonard	Salesman, Marshall Sons & Co (India), Ld	99, Clive Street	ditto
242	Collins, P R	Assistant, Geo Henderson & Co, Ld	101-1, Clive Street	ditto
243	Collins, Ralph Hubert	Assistant Engineer, *Statesman*, Ld	Statesman House	ditto
244	Collins, Warwick Howard	Assistant, South British Insurance Co, Ld	5, Clive Street	ditto
245	Colridge, Arthur	Salesman, Whiteaway, Laidlaw & Co, Ld	7, Chowringhee	ditto

246	Coltart, Ronald Hugh	Assistant, Mackenzie Lyall & Co	5, Mission Row	ditto
247	Combe, J P	Assistant, Bird & Co	1-1, Clive Street	ditto
248	Combie, F	Assistant, Calcutta General Printing Co, Ld	300, Bowbazar Street	ditto
249	Conn, D E	Measurer, Bengal Chamber of Commerce	2, Clive Street	ditto
250	Connolly, E M T	Chief Draftsman, Mechanical Dept, E B R	3, Koilaghat Street	ditto
251	Connolly, H S	Assistant, McLeod & Co	28, Dalhousie Square	ditto
252	Connolly, Joseph Francis	Store-keeper, Greaves Cotton & Co, Ld	60, Dharamtala Street	ditto
253	Conroy, J H W	Measurer, Bengal Chamber of Commerce	2, Clive Street	ditto
254	Cook, Collin Norman	Assistant, Army & Navy Stores, Ld	41, Chowringhee	ditto
255	Cooke, S C	Accountant, Lovelock & Lewes	4, Lyons Range	ditto
256	Coombe, W J B	Assistant Manager, The Gas Accumulator Co (India), Ld	12, Mission Row	ditto
257	Cooper, A A	Assistant, Jessop & Co, Ld	93, Clive Street	ditto
258	Cooper, F W	Engineer, G E C (India), Ld	Magnet House, Central Avenue, South	ditto
259	Cooper, P A V	Assistant, Andrew Yule & Co, Ld	8, Clive Row	ditto
260	Cope, J T	Salesman, W & T Avery, Ld	Avery House, Waterloo Street	ditto
261	Copping, Peter Norman	Assistant, Hamilton & Co, Ld	8, Old Court House Street	ditto
262	Corbet, Edward Lestrange	Assistant, Burmah Shell Co of India Ld	Hongkong House	ditto

No.	Names.	Style or calling	Residence or place of business.	Religion.
263	Corbett, W P	Clerk, C E's Office, E I R	E I R House	Christian
264	Corlett, Harold Robert	Salesman, Marshall Sons & Co (India), Ld	99, Clive Street	ditto
265	Corner, Alexander MacEwen	Manager, Despatch Deptt, Army & Navy Stores, Ld	41, Chowringhee	ditto
266	Cornish, R W	Assistant, Balmer Lawrie & Co, Ld	103, Clive Street	ditto
267	Corrin, Adrian Thomas	Assistant, Hoare Miller & Co, Ld	5, Fairlie Place	ditto
268	Corrin, R O	Assistant, Balmer, Lawrie & Co, Ld	103, Clive Street	ditto
269	Corsie, William	Assistant, Lyall Marshall & Co	4, Fairlie Place	ditto
270	Corstorphine, E E	Assistant, Jardine Skinner & Co	4, Clive Row	ditto
271	Coryton, P D O	Assistant, Octavius Steel & Co, Ltd	14, Old Court House Street	ditto
272	Course, R G	Assistant, Imperial Chemical Industries (India), Ld	18, Strand Road	ditto
273	Courtenay, D W	Clerk, Dunlop Rubber Co (India), Ld	42, Free School Street	dtito
274	Cousin, Ernest	Assistant, Hoare Miller & Co, Ld	5, Fairlie Place	ditto
275	Coutts, C H	Sub-Head, C A O's Office, E I R	E I R House	ditto
276	Coutts, Kenneth	Master, St Xaviers College	30, Park Street	ditto
277	Coventry, Arthur Frederick	Engineer, British Insulated Cables, Ld	2, Waterloo Street	ditto
278	Coventry, E D	Assistant, Bird & Co	1-1, Clive Street	ditto
279	Cowley, Harold Hendric	Assistant, Macneill & Co	2, Fairlie Place	ditto
280	Cowley, James Kewley	Journalist, *Statesman*, Ld	Statesman House	ditto

281	Cox, Charles	Assistant, Planters' Stores & Agency Co, Ld	11, Clive Street	ditto
282	Cox, Thomas	Underwriting Clerk, American Foreign Insurance Association	8, Clive Street	ditto
283	Craig, Robert Gordon	Salesman, I R G P & T W Co, Ld	7, Old Court House Street	ditto
284	Cramer, F A	Assistant, City Press	9, Strand Road	ditto
285	Craven, Lawrence Arther	Assistant, Bird & Co	1-1, Clive Street	ditto
286	Creais, Robert	Assistant, Burmah Shell Co of India, Ld	Hongkong House	ditto
287	Crews, O J	Assistant, Standard Vacuum Oil Co	6, Church Lane	ditto
288	Crinall, W O	Measurer, Bengal Chamber of Commerce	2, Clive Street	ditto
289	Cronan, Lubin Bertram	Assistant, T E Thomson & Co, Ld	9, Esplanade, East	ditto
290	Cross, W G	Operating & Works Engineer, Calcutta Tramways Co, Ld	7, Church Lane	ditto
291	Crossby, E J	Assistant Signal Engineer, E I R	E I R House	ditto
292	Crossby, John	Salesman, Whiteaway, Laidlaw & Co, Ld	7, Chowringhee	ditto
293	Cruse, G	Assistant, Dunlop Rubber Co (India), Ld	42, Free School Street	ditto
294	Cuddeford, E J	Assistant, Jardine Skinner & Co	4, Clive Row	ditto
295	Cullington, H S	Assistant, Andrew Yule & Co, Ld	8, Clive Row	ditto
296	Cummins, Hubert James	Assistant, Bengal Chamber of Commerce	2, Clive Street	ditto
297	Cunningham, Alexander More	Assistant, Northern Assurance Co, Ld	7, Hare Street	ditto
298	Curlender, A	Partner, S Curlender & Co	8, Old Court House Corner	ditto

No.	Names.	Style or calling.	Residence or place of business.	Religion.
299	Curlender, D	Partner, S Curlender & Co	8, Old Court House Corner	Christian
300	Curlender, Meyer	Partner, S Curlender & Co	8, Old Court House Corner	ditto
301	Currie, A H	Assistant, W Haworth & Co	1, Commercial Buildings	ditto
302	Curtis, Maurice Seymour	Assistant, Macneill & Co	2, Fairlie Place	ditto
	D			
303	D'Costa, L A	Assistant, Bengal Secretariat, Political Department	Writers' Buildings	Christian
304	D'Costa, P	Measurer, Bengal Chamber of Commerce	2, Clive Street	ditto
305	D'Cruz, A E	Measurer, Bengal Chamber of Commerce	2, Clive Street	ditto
306	D'Cruz, D F	Assistant, Turner, Morrison & Co, Ld	6, Lyons Range	ditto
307	D'Cruz, Ernest Berghman	Assistant Accountant, Port Commissioners' Office	Strand Road	ditto
308	D'Cruz, William Ernest	Assistant, Duncan Brothers & Co, Ld	101, Clive Street	ditto
309	D'Cruze, A	Assistant Salesman, Marshall Sons & Co (India), Ld	99, Clive Street	ditto
310	D'Cruze, D B	Assistant, A G's Office, Bengal	Treasury Buildings	ditto
311	D'Cruze, D R	Clerk, Jardine Skinner & Co	4, Clive Row	ditto
312	D'Moirah, S J	Measurer, Bengal Chamber of Commerce	2, Clive Street	ditto
313	D'Paiva, Joseph Chalmer	Assistant, Hoare Miller & Co, Ld	5, Fairlie Place	ditto

314	D'Rozario, D	Reader, Government of India Press	8, Hastings Street	ditto
315	D'Rozario, Joseph	Assistant, Bengal Chamber of Commerce	2, Clive Street	ditto
316	D'Santos, Edward	Assistant, Hoare Miller & Co, Ld	5, Fairlie Place	ditto
317	D'Silva, C J	Measurer, Bengal Chamber of Commerce	2, Clive Street	ditto
318	D'Silva, H C J	Measurer, Bengal Chamber of Commerce	2, Clive Street	ditto
319	D'Souza, A G, BA	Clerk, D A G P & T Office	7, Koilaghat Street	ditto
320	D'Souza, B W	Chief Clerk, Baptist Mission Press	41, Lower Circular Road	ditto
321	D'Souza, C	Assistant, Jessop & Co, Ld	93, Clive Street	ditto
322	D'Souza, C A	Measurer, Bengal Chamber of Commerce	2, Clive Street	ditto
323	D'Souza, D	Assistant, Hall & Anderson, Ld	31, Chowringhee	ditto
324	D'Souza, Francis D	Clerk, Prudential Assurance Co, Ld	Clive Buildings	ditto
325	D'Souza, G W	Measurer, Bengal Chamber of Commerce	2, Clive Street	ditto
326	D'Souza, J A	Measurer, Bengal Chamber of Commerce	2, Clive Street	ditto
327	D'Souza, R B	Assistant, Thacker Spink & Co (1933), Ld	3, Esplanade, East	ditto
328	D'Souza, Remigus Francis	Clerk, Prudential Assurance Co, Ld	Clive Buildings	ditto
329	DaCosta, Edwin William	Head Clerk, Eagle Star and British Dominions Insurance Co, Ld	21, Strand Road	ditto

No.	Names.	Style or calling.	Residence or place of business.	Religion.
330	Dakers, James Tullis	Assistant, Andrew Yule & Co, Ld	8, Clive Row	Christian
331	Dalling, Robert	Assistant Geo Beaver & Co	87-A, Clive Street	ditto
332	Dalmahoy, A E	Assistant, McLeod & Co	28, Dalhousie Square	ditto
333	Daniell, A H	Assistant, J O'Hara Murray & Co	100, Clive Street	ditto
334	Daniell, Hector Rupert Horatio, BA, BT	Master, Elias Meyer Free School and Talmud Torah	50, Bowbazar Street	ditto
335	Daniell, S	Stenographer, C M E's Office, E I R	E I R House	ditto
336	Daniels, A	Mech. Supervisor, Calcutta Improvement Trust	5, Clive Street	ditto
337	Darbyshire, H M	Assistant, Octavius, Steel & Co, Ld	14, Old Court House Street	ditto
338	Darwin, Eugene Kirby	Jr Superintendent, Reserve Bank of India	8, Council House Street	ditto
339	DaSilva, Richard Herbert	Journalist, *Statesman*, Ld	Statesman House	ditto
340	Davey, G H	Measurer, Bengal Chamber of Commerce	2, Clive Street	ditto
341	David, O	Assistant, Mackinnon, Mackenzie & Co	8, Strand Road	ditto
342	Davidson, J E	Assistant, Balmer, Lawrie & Co, Ld	103, Clive Street	ditto
343	Davidson, L A	Assistant, Imperial Bank of India	Strand Road	ditto
344	Davidson, Matthew Denholm	Assistant, A & J Main & Co, Ld	10, Clive Street	ditto
345	Davies, Stanley Horace	Assistant, Duncan Brothers & Co, Ld	101, Clive Street	ditto
346	Davies, William Owen	Engineer, W & T Avery, Ld	11, Crooked Lane	ditto

347	Davis, G F	Assistant, Lipton, Ld	9, Weston Street	ditto
348	Davis, Ralph S	Accountant, Ludlow Jute Co, Ld	7, Royal Exchange Place	ditto
349	Dawson, C J	Assistant, Andrew Yule & Co, Ld	8, Clive Row	ditto
350	Dawson, Donald Leslie	Assistant, W T Henley's Telegraph Works Co, Ld	Old Court House Corner	ditto
351	Dean, M R	Assistant Accountant, Lloyds Bank, Ld	101-1, Clive Street	ditto
352	Dearden, R A	Assistant, Associated British Machine Tool Makers, Ld	6, Old Post Office Street	ditto
353	Deacon, H G	Assistant, Andrew Yule & Co, Ld	8, Clive Street	ditto
354	DeCourcey, K S	Salesman, Greaves Cotton & Co, Ld	60, Dharamtala Street	ditto
355	Delacour, J H	Asstt Accountant, P & O Banking Corporation, Ltd	1, Fairlie Place	ditto
356	Delaplaine, A C	Assistant, Standard Vacuum Oil Co	6, Church Lane	ditto
357	DeLang, Edward	Assistant, Craven Bros (Manchester), Ld	19-C, British Indian Street	ditto
358	DeLeemans, E N	Measurer, Bengal Chamber of Commerce	2, Clive Street	ditto
359	Dennis, W H	Assistant Accountant, Lloyds Bank, Ld	101-1, Clive Street	ditto
360	Derosaire, E R G	Measurer, Bengal Chamber of Commerce	2, Clive Street	ditto
361	DeSanges, Thos R	Assistant, Burn & Co, Ld	12, Mission Row	ditto
362	DeSouza, Gabriel	Assistant, Bird & Co	1-1, Clive Street	ditto

No.	Names.	Style or calling.	Residence or place of business.	Religion.
363	Dessa, Albert	Assistant, Taylor's Gramophone Saloon	15-4, Chowringhee	Christian
364	Devereux, C A	Assistant, I G N & R Co, Ltd	4, Fairlie Place	ditto
365	Devereux, C H	Assistant, Jessop & Co, Ltd	93, Clive Street	ditto
366	Devereux, Lawrence Arthur	Architect, Talbot & Co	Tower House	ditto
367	Devery, Bernard John	Assistant, Hoare Miller & Co, Ld	5, Fairlie Place	ditto
368	Devine, F C	Sub-Accountant, Lloyds Bank, Ld	101-1, Clive Street	ditto
369	Diamond, W H	Assistant, Jessop & Co, Ld	93, Clive Street	ditto
370	Dias, G P	Assistant, Office of the I-G of Police	Writers' Buildings	ditto
371	Diboll, R W G	Acting Manager, Sutton & Sons, Ld	35, Park Mansions	ditto
372	Dick, W H A	Assistant, Lloyds Bank, Ld	101-1, Clive Street	ditto
373	Dickins, L Clifford	Engineer, Paterson Engineering Co (India), Ld	2, Dalhousie Square	ditto
374	Dickson, A R	Assistant, A M Mair & Co	6, Royal Exchange Place	ditto
375	Dickson, J W	Assistant, Mackinnon Mackenzie & Co	16, Strand Road	ditto
376	Dickson, Robert Fraser	Assistant, Ranken & Co, Ld	4, Old Court House Street	ditto
377	Dowley, D A	Assistant Inspector (Mains), Central District, C E S C, Ld	Victoria House	ditto
378	Dougal, W T	Sub-Accountant, Mercantile Bank of India, Ld	8, Clive Street	ditto

379	Douglas, D I	Assistant, H J Foster & Co, Ld	Sassoon House	ditto
380	Doyne, E D	Assistant, Kilburn & Co	4, Fairlie Place	ditto
381	Draper, Maurice, BSc (Lond)	Assistant Master, La Martiniere	11, Loudon Street	ditto
382	Drew, H	Vict Supdt, B I S N Co, Ld	16, Strand Road	ditto
383	Du Casse, A J	Assistant, Macmillan & Co, Ld	294, Bowbazar Street	ditto
384	Duckworth, G F, MA	S A S Clerk, D A G P & T Office	7, Koilaghat Street	ditto
385	Dudley, H	Assistant, G E C (India), Ld	Magnet House, Chittaranjan Avenue, South.	ditto
386	Duguid, Robert Hutton	Accountant, Duncan Brothers & Co, Ld	101, Clive Street	ditto
387	Dunbar, James	Accountant, *Statesman*, Ld	Statesman House	ditto
388	Duncan, C G	Assistant, Bombay Co, Ld	19, British Indian Street	ditto
389	Duncan, P C	Assistant, Geo Henderson & Co, Ld	101-1, Clive Street	ditto
390	Duncan, P M	Assistant, Geo Henderson & Co, Ld	101-1, Clive Street	ditto
391	Dunlop, W D W	Assistant Accountant, National Bank of India, Ld	104, Clive Street	ditto
392	Dunsford, Edward Henry	Assistant Engineer, Construction, C E S C, Ld	Victoria House	ditto
393	Dutton, Michael Lawrence	Examiner of Accounts, I T Office	3, Government Place, West	ditto
394	Dyer, P J	Assistant, Balmer, Lawrie & Co, Ld	103, Clive Street	ditto
395	Dyer, W H	Sub-Accountant, Lloyds Bank, Ld	101-1, Clive Street	ditto

No.	Name.	Style or calling	Residence or place of business.	Religion.
396	Dyer, Walter Lawrence Edmund	Assistant, Martin and Harris, Ld	17, Prinsep Street	Christian
	E			
397	Eady, B C	Assistant, Lovelock & Lewes	4, Lyons Range	Christian
398	Earl, Charles Clement	Assistant, Cox and Kings (Agents), Ld	5, Bankshall Street	ditto
399	Earshman, George Purves	Assistant, Ranken & Co, Ld	4, Old Court House Street	ditto
400	Easson, J W	Assistant, Gillanders Arbuthnot & Co	8, Clive Street	ditto
401	Eastment, T	Assistant Accountant, Port Commissioners' Office	Strand Road	ditto
402	Eburne, S T	Engineer, G E C (India), Ld	Magnet House, Chittaranjan Avenue, South.	ditto
403	Echlin, Cyril M	House Manager, Humayan Properties, Ld	1, Humayan Place	ditto
404	Edey, A R	Stock Broker, Stewart & Co	8, Clive Street	ditto
405	Edge, C S	Measurer, Bengal Chamber of Commerce	2, Clive Street	ditto
403	Edrich, W T	Assistant, Jardine Skinner & Co	4, Clive Row	ditto
407	Edwards, Edward	Salesman, Henry Maddison, Ld	Mercantile Buildings	ditto
408	Edwin, Alfred Samuel, BA	Assistant, Reserve Bank of India	8, Council House Street	ditto
409	Elder, J K	Assistant, Geo Henderson & Co, Ld	101-1, Clive Street	ditto
410	Elias, I	Foreman, Testing Department, C E	Victoria House	Jew

411	Elkin, William James	Assistant, Marshall Sons & Co (India), Ld	99, Clive Street	ditto
412	Ellicott, Noel Ivor	Retail Manager, Kodak, Limited	17, Park Street	ditto
413	Elliot, Edmond Waren	Assistant, Kilburn & Co	4, Fairlie Place	ditto
414	Elliott, Reginald Sutton	Assistant, Employer's Liability Assurance, Corpn, Ld	9, Clive Street	ditto
415	Ellis, J	Assistant, Balmer, Lawrie & Co, Ld	103, Clive Street	ditto
416	Ellis, Leslie Seymour	Assistant, Macneill & Co	2, Fairlie Place	ditto
417	Elloy, James F G, BA	Assistant, Education Department, Bengal Secretariat	Writers' Buildings	ditto
418	Elloy, S A J	Assistant, Jessop & Co, Ld	93, Clive Street	ditto
419	Engineer, H D	Assistant, Grahams Trading Co (India), Ld	6, Lyons Range	ditto
420	English, I J	Assistant, Standard Vacuum Oil Co	6, Church Lane	ditto
421	Ephraim, W	Press Reader, Baptist Mission Press	41, Lower Circular Road	ditto
422	Esplen, James Leslie	Assistant, Normans, Ross & Co	3, Clive Street	ditto
423	Essery, A E	Salesman, J Boseck & Co, Ld	16-5, Chowringhee	ditto
424	Evans, E J	Assistant, Guest, Keen, Williams, Ld	7, Council House Street	ditto
425	Evans, Percival Cadogan	Manager, I R G P & T W Co, Ld	7, Old Court House Street	ditto
426	Evenette, Ernest William	Assistant, Gillanders Arbuthnot & Co	8, Clive Street	ditto
427	Everingham, A A	Assistant, I G N & Ry Co, Ld	Armenian Ghat	ditto

No.	Name.	Style or calling.	Residence or place of business.	Religion.
428	Evrall, Roger	Salesman, Alfred Herbert (India), Ld	13-3, Strand Road	Christian
429	Ewing, F O	Assistant, I G N & Ry Co, Ld	4, Fairlie Place	ditto
430	Ezekiel, D	Partner, Ezekiel & Co	13, Chowringhee Lane	Jew
431	Ezekiel, E	Partner, Ezekiel & Co	13, Chowringhee Lane	ditto
432	Ezekiel, J	Partner, Ezekiel & Co	13, Chowringhee Lane	ditto
433	Ezra, Ezekiel	Assistant, Army & Navy Stores, Ld	41, Chowringhee	ditto
434	Ezra, M S	Superintendent, Central Registry, E B R	3, Kaylaghat Street	ditto
435	Ezra, Ralph	Assistant, Bird & Co	1-1, Clive Street	Christian

F

436	Falloon, V R	Assistant, McGregor & Balfour, Ld	11, Clive Street	Christian
437	Farmer, Francis Darell	Assistant, James Finlay & Co, Ld	1, Clive Street	ditto
438	Farrell, John Stanley	Assistant, Macneill & Co	2, Fairlie Place	ditto
439	Farrell, T A	Assistant, Shaw, Wallace & Co	4, Bankshall Street	ditto
440	Farrell, T M	Audit Inspector, Port Commissioners' Office	Strand Road	ditto
441	Farrer, C E	Assistant, Standard Vacuum Oil Co	6, Church Lane	ditto

442	Faulkner, John Claude	Assistant, Begg, Dunlop & Co, Ld	2, Hare Street	ditto
443	Fawcett, James Edward	Assistant, F W Heilgers & Co	1-1, Clive Street	ditto
444	Fellinger, Eugene Gerald	Artist, *Statesman*, Ld	Statesman House	ditto
445	Fenwick, J H	Sub-Accountant, Chartered Bank of India, Australia & China	1-1, Clive Street	ditto
446	Fenwick, W F	Works Manager, W & T Avery, Ld	11, Crooked Lane	ditto
447	Ferguson, J	Assistant, Jessop & Co, Ld	93, Clive Street	ditto
448	Fernandes, Mick	Accountant, George Newnes Book Co (India), Ld	10, Clive Row	ditto
449	Fernandez, C P	Measurer, Bengal Chamber of Commerce	2, Clive Street	ditto
450	Fernandez, Joacquin Ludoireo	Clerk, Prudential Assurance Co, Ld	Clive Buildings	ditto
451	Fernandez, Reginald	Clerk, Ralli Bros, Ld	16, Hare Street	ditto
452	Ferris, Maurice	Assistant, E D Sassoon & Co, Ld	101, Clive Street	Jew
453	Ferris, William, BA	Master, St Xaviers College	30, Park Street	Christian
454	Ferron, Arthur Richard	Salesman, Army & Navy Stores, Ld	41, Chowringhee	ditto
455	Fettes, W J A	Assistant, The Central Agency, Ld	2, Old Court House Corner	ditto
456	Fewkes, Henry Gordon	Assistant, J B Norton & Sons, Ld	Norton Buildings	ditto
457	Field, C A	Assistant, J Boseck & Co, Ld	17-3, Chowringhee	ditto
458	Findlay, R W	Assistant, I G N & Ry Co, Ld	4, Fairlie Place	ditto
459	Fink, L T MacRitchie, BCom (Lond)	Examiner of Accounts, Income-Tax Office	6, Esplanade, East	ditto

No.	Name.	Style or calling.	Residence or place of business.	Religion.
460	Fisher, E C	Assistant, Turner, Morrison & Co, Ld	6, Lyons Range	Christian
461	Fitzau, Ralph	Assistant, Max Staub, Ld	10, Clive Row	ditto
462	Fitzgerald, G D	Assistant, Gladstone, Wyllie & Co	4, Fairlie Place	ditto
463	Flanigan, Charles Andrew	Assistant, Hamilton & Co, Ld	8, Old Court House Street	ditto
464	Fleming, L H	Assistant, Thomas Duff & Co, Ld	3, Clive Row	ditto
465	Fleming, Murray	Assistant, Moran & Co, Ld	4, Lyons Range	ditto
466	Fletcher, Geoffrey Cyril	Stock Broker, Stewart & Co	8, Clive Street	ditto
467	Fletcher, Wy Cliffe	Assistant, Pigott Chapman & Co	6, Lyons Range	ditto
468	Fleury, G W	Engineer, Calcutta Mint	47, Strand Road	ditto
469	Fleury, M	Assistant, Standard Vacuum Oil Co	6, Church Lane	ditto
470	Flowerday, Lawrence	Assistant, Whiteaway Laidlaw & Co, Ld	7, Chowringhee	ditto
471	Foote, Arthur George Frank	Assistant, Army and Navy Stores, Ld	41, Chowringhee	ditto
472	Foolit, R L C, B A (Cantab)	Assistant, Burmah Shell Co of India, Ld	Hongkong House	ditto
473	Forbes, A A	Assistant, Jardine Skinner & Co	4, Clive Row	ditto
474	Forbes, Kenneth Herberts	Assistant, Burmah Shell Co of India, Ld	Hongkong House	ditto
475	Forbes, W K	Assistant, Price, Waterhouse, Peat & Co	B-4, Clive Buildings	ditto

476	Ford, E H	Assistant, Balmer, Lawrie & Co, Ld	103, Clive Street	ditto
477	Ford, Guy Harold	Salesman, Texas Co (India), Ld	11, Esplanade, East	ditto
478	Forster, Andrew Hine	Assistant, Barry & Co	2, Fairlie Place	ditto
479	Fox, A E	Assistant, McLeod & Co	28, Dalhousie Square	ditto
480	Fox, D	Assistant, Manton & Co	13, Old Court House Street	ditto
481	Fox, D R	Measurer, Bengal Chamber of Commerce	2, Clive Street	ditto
482	Francis, A W	Claims Inspector, E B R	3, Kaylaghat Street	ditto
483	Francis, C N	Assistant, Turner, Morrison & Co, Ld	6, Lyons Range	ditto
484	Francis, E	Assistant, I G N & Ry Co, Ld	Nimtala	ditto
485	Francis, J	Assistant, Turner, Morrison & Co, Ld	6, Lyons Range	ditto
486	Francis, Vernon Clifford	Master, Elias Meyer Free School and Talmud Torah	50, Bowbazar Street	ditto
487	Frankum, G C	Engineer, Calcutta Mint	47, Strand Road	ditto
488	Freestone, William	Assistant, C C Wakefield & Co, Ld	7, Royal Exchange Place	ditto
489	French, Bryan Morley	Assistant, James Finlay & Co, Ld	1, Clive Street	ditto
490	French, Collin Leslie	Assistant, F W Heilgers & Co	1-1, Clive Street	ditto
491	Frowd, L K	Assistant, Hall & Anderson, Ld	31, Chowringhee	ditto
492	Frutwein, G E	Assistant, Place Siddon & Gough	6, Lyons Range	ditto

No.	Name.	Style or calling.	Residence or place of business.	Religion.
493	Fuller, Gordon Wallace	Assistant, Nestle & Anglo-Swiss Condensed Milk (Export) Co, Ld	9A, Clive Street	Christian
494	Furlonger, C A M	Assistant, Standard Vacuum Oil Co	6, Church Lane	ditto
495	Furns, John Smith	Assistant, Moran & Co, Ld	4, Lyons Range	ditto
496	Fyfe, J H	Assistant, Mackinnon Mackenzie & Co	16, Strand Road	ditto
497	Fyfe, J M	Assistant, Balmer Lawrie & Co, Ld	103, Clive Street	ditto
	G			
498	Gade, R V	Assistant, Heatly & Gresham, Ld	6, Waterloo Street	Christian
499	Gainsford, A T	Assistant, Mackinnon, Mackenzie & Co	16, Strand Road	ditto
500	Gale, V F	Assistant, Balmer, Lawrie & Co, Ld	103, Clive Street	ditto
501	Galloway, Albert Henry	Assistant Manager, Corn Products Co (India), Ld	4, Lyons Range	ditto
502	Galloway, A H	Assistant, Octavius Steel & Co, Ld	14, Old Court House Street	ditto
503	Garate, Edmound Ernest	Assistant, Army & Navy Stores, Ld	41, Chowringhee	ditto
504	Garreau, Ronald	Boiler Inspector	40-1A, Free School Street	ditto
505	Garrison, Edward	Principal, City Telegraph & Commercial College	121-B, Bowbazar Street	ditto
506	Gellatly, A K	Assistant, Turner, Morrison & Co, Ld	6, Lyons Range	ditto
507	Gellatly, K M	Assistant, Turner, Morrison & Co, Ld	6, Lyons Range	ditto

508	George, B	Storekeeper, McGregor and Balfour, Ld	11, Clive Street	ditto
509	George, T J	Assistant, Bombay Co, Ld	19, British Indian Street	ditto
510	Gerard, E L	Assistant, Balmer, Lawrie & Co, Ld	103, Clive Street	ditto
511	Gidley, A G	Assistant, Burn & Co, Ld	12, Mission Row	ditto
512	Gilbert, James Anderson	Assistant, Cox and Kings (Agents), Ld	5, Bankshall Street	ditto
513	Giles, D H	Assistant, Alliance Insurance Co	2, Hare Street	ditto
514	Gill, F R	Measurer, Bengal Chamber of Commerce	2 Clive Street	ditto
515	Gill, H S	Assistant, Lovelock & Lewes	4, Lyons Range	ditto
516	Gillespie, E F	Storekeeper, Jewell Export Filter Co	10, Clive Street	ditto
517	Gilmour, Lockart	Engineer, Chloride Electrical Storage Co, Ld	4, Lyons Range	ditto
518	Gilson, C	Assistant, Babcock, Wilcox, Ld	4, Bankshall Street	ditto
519	Ginzler, A T F	Assistant, Heatly & Gresham, Ld	6, Waterloo Street	ditto
520	Ginzler, J R	Assistant, Heatly & Gresham, Ld	6, Waterloo Street	ditto
521	Glasfurd, Gerald Fenton	Assistant, J & R Hutchison, Ld	29, Waterloo Street	ditto
522	Glasfurd, Harold Oscar	Head Master, St Paul's Higher Grade Mission School	13, Scott's Lane	ditto
523	Glenn, U	Assistant, Price, Waterhouse, Peat & Co	B-4, Clive Buildings	ditto

No	Name.	Style or calling	Residence or place of business.	Religion
524	Glover, Alfred Edwin	Assistant, Alfred Herbert (India), Ld	13-3, Strand Road	Christian
525	Glover, Danford	Assistant, Worthington, Simpson, Ld	10, Clive Street	ditto
526	Glynn, N C	Measurer, Bengal Chamber of Commerce	2, Clive Street	ditto
527	Godwin, Harold James	Assistant, Thomas, Cook & Son, Ld	4, Dalhousie Square	ditto
528	Gomes, Joseph Aloysius	Assistant, Army & Navy Stores, Ld	41, Chowringhee	ditto
529	Gomes, J S	Assistant, Hall & Anderson, Ld	31, Chowringhee	ditto
530	Gomez, B L	Assistant, Jessop & Co, Ld	93, Clive Street	ditto
531	Gomez, C O	Assistant, Balmer, Lawrie & Co, Ld	103, Clive Street	ditto
532	Gomez, John Henry	Assistant Engineer, *Statesman*, Ld	Statesman House	ditto
533	Gomme, D E	Assistant, Octavius Steel & Co, Ld	14, Old Court House Street	ditto
534	Gonsalves, J R	Assistant, Turner, Morrison & Co, Ld	6, Lyons Range	ditto
535	Gonsalves, S R	Stenographer, Mechanical Department, E B R	3, Koilaghat Street	ditto
536	Goodman, E L	Assistant, McLeod & Co	28, Dalhousie Square	ditto
537	Goodman, George Joseph	Assistant, Anderson, Wright & Co	22, Strand Road	ditto

538	Gordon, J	Engineer. Mackintosh, Burn, Ld	8, Clive Street	ditto
539	Gosling, E B	Assistant, Jessop & Co, Ld	93, Clive Street	ditto
540	Goss, A	Works Manager, A Milton & Co, Ld	156, Dharamtala Street	ditto
541	Gough, Harry	Assistant, Cox & Kings (Agents), Ld	5, Bankshall Street	ditto
542	Gould, A	Head Assistant. Sun Life of Canada	12, Dalhousie Square, East	ditto
543	Gourlay, R A	Assistant, Jardine, Skinner & Co	4, Clive Row	ditto
544	Graham, Joseph Faulds	Assistant, British Insulated Cables, Ld	2, Waterloo Street	ditto
545	Graham, Osmond Joseph	Reader, Caledonian Printing Co, Ld	3, Wellesley Place	ditto
546	Grange, Aubrey Cecil Malcolm	Salesman, Kalamazoo (Sales), Ld	2 and 3, Clive Row	ditto
547	Granville, Harry Norman	Assistant, New Zealand Insurance Co, Ld	26, Dalhousie Square	ditto
548	Graves, A J	Assistant, Allen and Hanburys, Ld	C-3, Clive Buildings	ditto
549	Gray, Charles	Master, St. Xaviers College	30, Park Street	ditto
550	Greaves, Jack	Salesman, Walford Transport, Ld	71-73, Park Street	ditto
551	Greene, W R	Assistant, Jardine, Skinner & Co	4, Clive Row	ditto
552	Gregory, G E	Assistant, R K O Radio Pictures, Ld	98E, Central Avenue, South	ditto
553	Gregory, George William	Assistant, Hoare Miller & Co, Ld	5, Fairlie Place	ditto

No.	Name.	Style or calling.	Residence or place of business.	Religion.
554	Gregory, John Simon	Assistant, Talbot & Co	Tower House	Christian
555	Gregson, H R	Engineer, Chloride Electric Storage Co, Ld	4, Lyons Range	ditto
556	Grenon, D	Assistant, City Press	9, Strand Road	ditto
557	Grieve, A C	Assistant, Jardine, Skinner & Co	4, Clive Row	ditto
558	Griffin, G E	Salesman, Marshall Sons & Co (India), Ld	99, Clive Street	ditto
559	Griffiths, G C	Assistant, Balmer, Lawrie & Co, Ld	103, Clive Street	ditto
560	Grimpel, B H	Assistant, Cox & Kings (Agents), Ld	5, Bankshall Street	ditto
561	Grueber, P K	Head Clerk, Calcutta Tramways Co, Ld	7, Church Lane	ditto
562	Gueizelar, Oliver Osmond	Chief Contract Clerk, Bengal Telephone Corporation, Ld	8, Hare Street	ditto
563	Gundry, George	Salesman, Harnack & Co	10, Old Court House Street	ditto
564	Guynan, Herbert William	Assistant, T E Thomson & Co, Ld	9, Esplanade, East	ditto
	H			
565	Hadlow, B D	Assistant, Turner, Morrison & Co, Ld	6, Lyons Range	ditto
566	Hall, S G	Sub-Accountant, Lloyds Bank, Ld	101-1, Clive Street	ditto

567	Hall, V G	Assistant, Thorne's, Ld	13, Ezra Street	ditto
568	Hall, W R	Assistant, Standard Vacuum Oil, Co	6, Church Lane	ditto
569	Halpin, J E	Office Superintendent, Port Commissioners' Office	Strand Road	ditto
570	Hamilton, John	Boiler Inspector	40-1A, Free School Street	ditto
571	Hamilton, Robert Mackay	Assistant, A & G Main & Co, Ld	10, Clive Street	ditto
572	Hammond, A F	Assistant, Lloyds Bank, Ld	101-1, Clive Street	ditto
573	Hanley, Patrick William	Assistant, Cooke and Kelvey	20, Old Court House Street	ditto
574	Hanlon, J V	Assistant, Standard Vacuum Oil, Co	6, Church Lane	ditto
575	Hannah, Donald Victor	Boiler Inspector	40-1A, Free School Street	ditto
576	Hannah, M R	Sub-Accountant, Chartered Bank of India, Australia & China	1-1, Clive Street	ditto
577	Hannah, R L	Assistant, Calcutta Tramways Co, Ld	7, Church Lane	ditto
578	Hanson, H N	Measurer, Bengal Chamber of Commerce	2, Clive Street	ditto
579	Hanson, Oliver	Assistant, Samuel Fitze & Co, Ld	26, Chowringhee	ditto
580	Hardaker, John	Journalist, *Statesman*, Ld	Statesman House	ditto
581	Harding, B A	Assistant, Breakwell & Co	44, Free School Street	ditto

No.	Name.	Style or calling.	Residence or place of business.	Religion.
582	Hardinge, Roderic Melwood	Assistant, F W Heilgers & Co	1-1, Clive Street	Christian
583	Hardless. Cedric	Assistant, Ralli Bros, Ld	16, Hare Street	ditto
584	Hardless, W	Assistant, Hall & Anderson, Ld	31, Chowringhee	ditto
585	Hardman, Gerald Moss	Engineer, English Electric Co, Ld	D-4, Clive Buildings	ditto
586	Harker, Henry H, BA (Oxon)	Assistant Master, La Martiniere	11, Loudon Street	ditto
587	Harper, E	Superintendent of Stores, Sutton & Sons, Ld	35, Park Mansions	ditto
588	Harrington, William Maurice	Sub-Editor, " Star of India "	3, Wellesley Place	ditto
589	Harris, Albert Victor	Assistant, Hamilton & Co, Ld	8, Old Court House Street	ditto
590	Harris, Herbert Stanley	Assistant, British Insulated Cables, Ld	2, Waterloo Street	ditto
591	Harris, K F L	Assistant, F W Heilgers & Co	1-1, Clive Street	ditto
592	Harrison, Frank	Assistant Manager, Cox & Kings (Agents), Ld	5, Bankshall Street	ditto
593	Harrison, S G	Assistant, Ocean Accident & Guarantee Corporation, Ld	32-1, Dalhousie Square, South	ditto
594	Harvey, A	Assistant, Lloyds Bank, Ld	101-1, Clive Street	ditto
595	Haslam, P	Assistant, Hall & Anderson , Ld	31, Chowringhee	ditto
596	Hastings, Andrew S	Engineer, Mackintosh Burn, Ld	8, Clive Street	ditto

597	Hawkings, R J	Assistant, G E C (India), Ld	Magnet House, Chittaranjan Avenue (South).	ditto
598	Hawkins, R E	Assistant, Gladstone Wyllie & Co	4, Fairlie Place	ditto
599	Hay, Edmond Gordon	Assistant, Burmah Shell Co of India, Ld	Hongkong House	ditto
600	Hay, William	Engineer, Mackintosh Burn, Ld	8, Clive Street	ditto
601	Hayeck, John Francis	Assistant, Llewellyn & Co	9-1, Waterloo Street	ditto
602	Hayden H K	Assistant, Hall & Anderson, Ld	31, Chowringhee	ditto
603	Hayman, R D	Assistant, Mackinnon Mackenzie & Co	16, Strand Road	ditto
604	Head, George	Photographer, *Statesman*, Ld	Statesman House	ditto
605	Heathman, G B H	Assistant Accountant, Lloyds Bank, Ld	101-1, Clive Street	ditto
606	Hedley, Brian Ernest	Sales Engineer, Standard Telephones & Cables, Ld	4, Esplanade, East	ditto
607	Heelis, Richard	Assistant, Andrew, Yule & Co, Ld	8, Clive Row	ditto
608	Hefferan, Albert Edward	Assistant, Ralli Bros, Ld	16, Hare Street	ditto
609	Hemming, Charles Capper	Assistant, Alliance Assurance Co, Ld	2, Hare Street	ditto
610	Hempson, John Spencer	Assistant, Burmah Shell Co of India, Ld	Hongkong House	ditto
611	Hemshaw, David	Assistant, Walter Bushnell, Ld	21, Old Court House Street	ditto
612	Henderson, D R	Assistant, Remington Rand Inc	3, Council House Street	ditto

No.	Name.	Style or calling.	Residence or place of business.	Religion.
613	Henderson, Donald Victor	Assistant, The Indo Burma Petroleum Co, Ld	8, Clive Street	Christian
614	Hendry, G V	Assistant, Grahams Trading Co (India), Ld	6, Lyons Range	ditto
615	Henry, J	Godown Superintendent, Imperial Chemical Industries (India), Ld	18, Strand Road	ditto
616	Henwood, George Pearson	Assistant, Ralli Bros, Ld	16, Hare Street	ditto
617	Herbert, J F	Assistant, Kilburn & Co	4, Fairlie Place	ditto
618	Hetherington, Henry Alfred	Assistant Engineer, Scott & Saxby, Ld	19, British Indian Street	ditto
619	Heysham, George Clifford Berkeley	Assistant, Ralli Bros, Ld	16, Hare Street	ditto
620	Hezmalhatch, Alfred	Assistant, Andrew, Yule & Co, Ld	8, Clive Row	ditto
621	Hickman, T	Assistant, Kilburn & Co	4 Fairlie Place	ditto
622	Hickman, W	Inspector, C E S C, Ld	Victoria House	ditto
623	Hickmott, Reginald Ernest Joseph	Assistant, Hoare Miller & Co, Ld	5, Fairlie Place	ditto
624	High, J W	Assistant, Jessop & Co, Ld	93, Clive Street	ditto
625	Hill, C Rowland	Proprietor, General Export Co	55-58, Ezra Street	ditto
626	Hill, F W	Assistant, Andrew, Yule & Co, Ld	8, Clive Row	ditto

627	Hillary, A	Lino Operator, Govt of India Press	8, Hastings Street	ditto	
628	Hilliard, W A	Assistant, McGregor & Balfour, Ld	11, Clive Street	ditto	
629	Hillman, G K	Assistant, Standard Vacuum Oil, Co	6, Church Lane	ditto	
630	Hinton, W W	Assistant, Jardine, Skinner & Co	4, Clive Row	ditto	
631	Hippolite, D A	Measurer, Bengal Chamber of Commerce	2, Clive Street	ditto	
632	Hippolite, Eric James	Assistant, Blackwood, Bryson & Co, Ld	2, Mangoe Lane	ditto	
633	Hipsey, Alfred William Leslie	Accountant, Air Conditioning Corporation, Ld	4, Dalhousie Square	ditto	
634	Hirtzel, Michael Arthur Frederick	Assistant, Macneill & Co]	2, Fairlie Place	ditto	
635	Hobson, Charles William	Assistant, Bengal Chamber of Commerce	2, Clive Street	ditto	
636	Hockley, B	Assistant, Calcutta Claims Bureau	26, Dalhousie Square	ditto	
637	Hockley, C	Assistant, McLeod & Co	28, Dalhousie Square	ditto	
638	Hodgen, W K	Assistant, I G N & Ry, Co, Ld	Nimtollah	ditto	
639	Hodges, Douglas Arthur	Assistant, Bell's Asbestos & Engineering (India), Ld	10, Clive Street	ditto	
640	Hodges, Ernest William	Assistant, Army & Navy Stores, Ld	41, Chowringhee	ditto	
641	Hodgkinson, H	Assistant, Jessop & Co, Ld	93, Clive Street	ditto	
642	Hogg, W	Assistant, Babcock, Wilcox, Ld	4, Bankshall Street	ditto	
643	Hoggan, D C J	Draftsman, C M E's Office, E I R	E I R House	ditto	

No.	Names.	Style or calling.	Residence or place of business.	Religion.
644	Hollands, John A	Assistant. Lionel, Edwards, Ld	D-1, Clive Buildings	Christian
645	Holden. W L	Clerk, Dunlop Rubber Co (India), Ld	42, Free School Street	ditto
646	Hollis, A W	Assistant, Birla Brothers, Ld	8, Royal Exchange Place	ditto
647	Holmes, A C	Sub-Accountant, Lloyds Bank, Ld	101-1, Clive Street	ditto
648	Holmes, E C T	Assistant, Balmer, Lawrie & Co, Ld	103, Clive Street	ditto
649	Hood, John	Assistant, Roberts, McLean & Co, Ld	101, Clive Street	ditto
650	Hook, Gerald Joseph	Assistant, Anderson, Wright & Co	22, Strand Road	ditto
651	Hook, Henry Milton	Journalist, Statesman Ld	Statesman House	ditto
652	Hoover, Robert	Assistant, Texas Co (India), Ld	11, Esplanade, East	ditto
653	Hopkins, C A	Assistant, Ocean, Accident & Guarantee Corpn, Ld	32-1, Dalhousie Square, South	ditto
654	Hopkins, N D	Assistant, Brooke Bond (India), Ld	2, Metcalfe Street	ditto
655	Hopkins, Trevor Henry	Assistant, Walter, Bushnell, Ld	21, Old Court House Street	ditto
656	Horn, Loftus Percy	Assistant, Bird & Co	1-1, Clive Street	ditto
657	Hornsey, Fredrick	Partner, The India Oil, Co	Stephen House	ditto
658	Houghton, D A	Assistant, Shaw, Wallace & Co	4, Bankshall Street	ditto
659	Howard, H	Assistant, Price, Waterhouse, Peat & Co	B4, Clive Buildings	ditto
660	Howatson, M H Kirkwood	Assistant, Burmah Shell Co of India, Ld	Hongkong House	ditto
661	Howe, William Fraser	Assistant, Bird & Co	1-1, Clive Street	ditto

662	Hoyle, C G	Engineer, Calcutta Mint	47, Strand Road		ditto
663	Huck, John	Assistant, Lyall, Marshall & Co	4, Fairlie Place		ditto
664	Hugh, Francis Spencer	Assistant, Samuel, Fitz & Co, Ld	26, Chowringhee		ditto
665	Hudson, John	Assistant, Butterworth & Co (India), Ld	Chowringhee Square		ditto
666	Hugh, Oswald Sheanc-Smith	Assistant, Martin & Co	12, Mission Row		ditto
667	Hughes, R A	Journalist, *Statesman*, Ld	Statesman House		ditto
668	Hume, A H	Assistant, Turner, Morrison & Co, Ld	6, Lyons Range		ditto
669	Humfrey, C M	Assistant, Associated Electrical Industries (India), Ld	A-3, Clive Buildings		ditto
670	Humphrey, W R	Dy Superintendent, I G N & Ry, Co, Ld	4, Fairlie Place		ditto
671	Humphrys, Arthur Sankey	Assistant, *Statesman*, Ld	Statesman House		ditto
672	Hunt, D	Assistant, Gladstone, Wyllie & Co	4, Fairlie Place		ditto
673	Hunt, L E	Assistant, Turner, Morrison & Co, Ld	6, Lyons Range		ditto
674	Hunter, C E	Assistant, The Apcar Collieries, Ld	2, Fairlie Place		ditto
675	Hunter, D H	Assistant, Jessop & Co, Ld	93, Clive Street		ditto
676	Hunter-Arundell, W F	Assistant, Jardine, Skinner & Co	4, Clive Row		ditto
677	Hurst, Frederic Alexander	Photographer, *Statesman*, Ld	Statesman House		ditto
678	Hutcheon, William	Salesman, Marshall Sons & Co (India), Ld	99, Clive Street		ditto

No.	Names.	Style or calling.	Residence or place of business.	Religion.
679	Hutchison, C G	Assistant, Balmer, Lawrie & Co, Ld	103, Clive Street	Christian
680	Hutchison, Edward Arthur	Assistant, James, Finlay & Co, Ld	1, Clive Street	ditto
681	Hutchison, Hugh Arbuckle	Engineer, W Billinton & Co, Ld	Stephen House	ditto
682	Hutson, David Joseph	Assistant, Ralli Brothers, Ld	16, Hare Street	ditto
683	Hutton, G M	Sub-Accountant, Chartered Bank of India, Australia and China	1-1, Clive Street	ditto
684	Huyshe, A E	Assistant, Kilburn & Co	4, Fairlie Place	ditto
	I			
685	Inglis, Norman Lionel	Head Assistant, European Association	17, Stephen Court, Park Street	Christian
686	Irwin, James	Assistant, Harman & Co, Ld	11, Government Place	ditto
	J			
687	Jackson, D	Assistant, I G N & Ry Co, Ld	4, Fairlie Place	Christian
688	Jackson, Frederick Bleasdale	Assistant, Worthington-Simpson, Ld	10, Clive Street	ditto
689	Jackson, Henry Kenneth	Assistant, Prudential Assurance Co, Ld	Clive Buildings	ditto
690	Jacob, D M	Assistant, Turner, Morrison & Co, Ld	6, Lyons Range	ditto
691	Jacob, R J	Salesman, Remington Rand, Inc	3, Council House Street	Jew
692	Jacob, Samuel Joseph	Assistant, Sinclair, Murray & Co, Ld	6, Royal Exchange Place	ditto
693	Jacob, Joseph	Clerk, Army and Navy Stores, Ld	41, Chowringhee	ditto

694	Jacques, W H	Assistant, J Thomas & Co	8, Mission Row	ditto
695	Jahans, Norman Bernard	Assistant, Alfred, Herbert (India), Ld	13-3, Strand Road	ditto
696	James, A A	Stenographer, W H Brady & Co, Ld	26, Strand Road	ditto
697	James, Alan Sherman	Assistant, Hoare, Miller & Co, Ld	5, Fairlie Place	ditto
698	Jamieson, John Hutton	Assistant, James, Finlay & Co, Ld	1, Clive Street	ditto
699	Jamison, C G	Assistant, Mackinnon, Mackenzie & Co	8, Strand Road	ditto
700	Jarvis, Cecil John Edmund	Assistant, Royal Exchange Assurance	1 & 2, Old Court House Corner	ditto
701	Jarvis, Donald Edward Manners	Assistant, D J Keymer & Co, Ld	4, Lyons Range	ditto
702	Jary, Basil McLean	Engineer, W Billinton & Co, Ld	Stephen House	ditto
703	Jeff, R	Assistant, McLeod & Co	28, Dalhousie Square	ditto
704	Jenkin, C P M	Sub-Accountant, Chartered Bank of India, Australia & China	1-1, Clive Street	ditto
705	Jenkins, O T	Assistant, Balmer, Lawrie & Co, Ld	103, Clive Street	ditto
706	Jennings, Denzil Norman	Assistant, F W Heilgers & Co	1-1, Clive Street	ditto
707	John, Leon Carapiet	Assistant, Talbot & Co	Tower House	ditto
708	John, Samuel Henry	Timekeeper, Bengal Telephone Corpn, Ld	8, Hare Street	ditto
709	Johnson, R	Assistant, Balmer, Lawrie & Co, Ld	103, Clive Street	ditto
710	Johnson, S H	Assistant, H D Cartwright & Co	2, Clive Ghat Street	ditto
711	Jones, A G	Engineer, Calcutta Mint	47, Strand Road	ditto

No.	Names.	Style or calling.	Residence or place of business.	Religion.
712	Jones, Arthur Llewellyn	Treasurer & House Manager, Humayan Properties, Ld	1, Humayan Place	Christian
713	Jones, B S	Engineer, Calcutta Mint	47, Strand Road	ditto
714	Jones, J.	Assistant, Balmer, Lawrie & Co, Ld	103, Clive Street	ditto
715	Jones, J R	Assistant, Standard Vacuum Oil, Co	6, Church Lane	ditto
716	Jones, N S	Engineer, Calcutta Mint	47, Strand Road	ditto
717	Jones, O W	Clerk, Dunlop Rubber Co (India), Ld	42, Free School Street	ditto
718	Jones, Norman Clarence Henry	Storekeeper, Chloride Electrical Storage Co, Ld	4, Lyons Range	ditto
719	Jones, P S	Chief Assistant, C O S Office, E I R	E I R House	ditto
720	Jones, Paul J, B Sc	Clerk, D A G P & T Office	7, Koilaghat Street	ditto
721	Jones, Stevenson Wilson	Assistant, Macneill & Co	2, Fairlie Place	ditto
722	Jore, G C	Assistant, A G's Office, Bengal	Treasury Buildings	ditto
723	Joscelyne, A K	Assistant, Lovelock & Lewes	4, Lyons Range	ditto
724	Joseph, E M	Assistant, Grahams Trading Co (India), Ld	6, Lyons Range	ditto
725	Joshep, Isaac Moses	Assistant, Walter, Bushnell, Ld	21, Old Court House Street	Jew
726	Joshua, Jack Harry	Assistant, Planters' Stores & Agency Co, Ld	11, Clive Street	Christian
727	Junior, Thomas	Assistant, T E Thomson & Co, Ld	9, Esplanade, East	ditto
	K			
728	Kane, H W G	Assistant, Guest, Keen, Williams, Ld	7, Council House Street	Christian

729	Keiller, Douglas	Salvage Assessor, Sinclair, Murray & Co, Ld	6, Royal Exchange Place	ditto
730	Kendrew, N A	Assistant, Jardine, Skinner & Co	4, Clive Row	ditto
731	Kennedy, I G	Assistant, Jardine, Skinner & Co	4, Clive Row	ditto
732	Kerr, E L	Assistan, Jessop & Co, Ld	93, Clive Street	ditto
733	Kershaw, D K	Accountant, Dunlop Rubber Co (India), Ld	42, Free School Street	ditto
734	Kewley, C	Assistant, Price, Waterhouse, Peat & Co	B-4, Clive Buildings	ditto
735	Keyworth, Norman	Salesman, Marshall Sons & Co (India), Ld	99, Clive Street	ditto
736	Kidd, Frank Carlile	Assistant, F W Heilgers Co	1-1, Clive Street	ditto
737	Kidd, F H	Assistant, Thomas Duff & Co, Ld	3, Clive Row	ditto
738	Kidd, George Maxwell	Assistant, Bird & Co	1-1, Clive Street	ditto
739	Kilgour, Andrew McBlain	Assistant, Ranken & Co, Ld	4, Old Court House Street	ditto
740	Killick, W B	Assistant, I G N & Ry Co, Ld	4, Fairlie Place	ditto
741	King, D H	Measurer, Bengal Chamber of Commerce	2, Clive Street	ditto
742	King, H M	Assistant, Anderson Wright & Co	22, Strand Road	ditto
743	King, K F	Assistant, Mather & Platt, Ld	7, Hare Street	ditto
744	King, R B	Assistant, Andrew Yule & Co, Ld	8, Clive Row	ditto
745	Knight, Robert	Assistant, Craven Bros (Manchester), Ld	19-C, British Indian Street	ditto
746	Knight, R A	Assistant, Army & Navy Stores, Ld	41, Chowringhee	ditto
747	Kolb, E H	Assistant, Standard Vacuum Oil Co	6, Church Lane	ditto

No.	Names.	Style or calling.	Residence or place of business.	Religion.
	L			
748	Lacey, Marten	Assistant, *Statesman*, Ld	Statesman House	Christian.
749	Lacey, W C	Manager, Sitalprasad Kharagprasad	31, Burtolla Street	ditto
750	Landeman, I S	Assistant, Jessop & Co, Ld	93, Clive Street	ditto
751	Lane, Leopold Edgar	Assistant, *Statesman*, Ld	Statesman House	ditto
752	Lane, Vivian Broughton	Assistant, Standard Vacuum Oil Co	6, Church Lane	ditto
753	Lane, Walter Edward	Assistant Engineer, Scott & Saxby, Ld	19, British Indian Street	ditto
754	Langlois, J	Superintendent, Coll Dept, Remington Rand, Inc	3, Council House Street	ditto
755	Langton, John	Assistant, Ralli Brothers, Ld	16, Hare Street	ditto
756	Lanyado, Yeddie	Assistant, E. D. Sasson & Co, Ld	101, Clive Street	Jew
757	Large, Thomas	Line Inspector, Bengal Telephone Corporation, Ld	8, Hare Street	Christian
758	Larkin, R S	Assistant, Mackinnon, Mackenzie & Co	16, Strand Road	ditto
759	Larkins, W J	Measurer, Bengal Chamber of Commerce	2, Clive Street	ditto
760	Last, R C	Assistant, I G N & Ry Co, Ld	4, Fairlie Place	ditto
761	Law, Frank	Assistant, F W Heilgers & Co	1-1, Clive Street	ditto
762	Law, Richard	Assistant Master, St. Paul's Higher Grade Mission School	13, Scott's Lane	ditto

763	Lawie, G D	Sub-Accountant, Chartered Bank of India, Australia and China	1-1, Clive Street	ditto
764	Lawrence, J A	Import Clerk, Mackinnon, Mackenzie & Co	8, Strand Road	ditto
765	Lawrence, Sidney Arthur	Reader, *Statesman*, Ld	Statesman House	ditto
766	Lawrenson, Robert Sinclair	Boiler Inspector	40-1A, Free School Street	ditto
767	Lawson, D H	Assistant, Jessop & Co, Ld	93, Clive Street	ditto
768	Lawson, H	Salesman, Remington Rand, Inc	3, Council House Street	ditto
769	Lawson, S E	Assistant, Kilburn & Co	4, Fairlie Place	ditto
770	Lawton, William	Assistant, Andrew Yule & Co, Ld	8, Clive Row	ditto
771	Le Blond, F	Assistant, Andrew Yule & Co, Ld	8, Clive Row	ditto
772	Lee, William Alford John	Assistant, Army & Navy Stores, Ld	41, Chowringhee	ditto
773	Leefe, George Noel	Assistant, Hamilton & Co, Ld	8, Old Court House Street	ditto
774	Leeming, Reginald Charles	Assistant, Burmah-Shell Co of India, Ld	Hongkong House	ditto
775	Lees, J	Assistant, J Thomas & Co	8, Mission Row	ditto
776	Le Fancheur, Robert	Assistant, North British & Mercantile Insurance Co, Ld	101-1, Clive Street	ditto
777	Le Franc, E H	Assistant, Harrisons & Crosfield, Ld	6, Church Lane	ditto
778	Leibenhals, C G	Assistant, Hall & Anderson, Ld	31, Chowringhee	ditto
779	Leicester, G F	Measurer, Bengal Chamber of Commerce	2, Clive Street	ditto

No.	Names.	Style or calling.	Residence or place of business.	Religion.
780	Leicester, Mervyn Terence	Assistant, Bengal Chamber of Commerce	2, Clive Street	Christian
781	Leng, Leonard John	Assistant, W T Henley's Telegraph Works Co, Ld	Old Court House Corner	ditto
782	Lennett, F I Gordon	Superintendent, Landing & Shipping, B I S N Co, Ld	9, Jetty	ditto
783	Leonard, C P	Assistant, Standard Vacuum Oil, Co	6, Church Lane	ditto
784	Le Patourel, Barry, MA	Assistant Master, La Martinière	11, Loudon Street	ditto
785	Leslie, William, MA	Assistant, Duncan Bros & Co, Ld	101, Clive Street	ditto
786	Leslie-Hall, J	Measurer, Bengal Chamber of Commerce	2, Clive Street	ditto
787	Levi, Victor, BSc	Examiner of Accounts, Income-tax Office	6, Esplanade, East	ditto
788	Lewis, Alfred	Assistant Engineer, *Statesman*, Ld	Statesman House	ditto
789	Lewis, B E	Assistant, Grahams Trading Co (India), Ld	6, Lyons Range	ditto
790	Lewis, H C	Assistant, Balmer, Lawrie & Co, Ld	103, Clive Street	ditto
791	Lewis, Haywood Joseph	Assistant, Royal Calcutta Turf Club	11, Russell Street	ditto
792	Lewis, M	Steno-typist, Traffic Department, E B R	3, Kaylaghat Street	ditto
793	Lewis, Victor Andrew	Assistant, Blackwood, Bryson & Co, Ld	2, Mangoe Lane	ditto
794	Liddlerdale, Eric	Assistant, Bird & Co	1-1, Clive Street	ditto
795	Liddle, G W	Assistant, J Thomas & Co	8, Mission Row	ditto

796	Liddle, W J	Sub-Accountant, Mercantile Bank of India, Ld	8, Clive Street	ditto
797	Lindsay, W	Assistant, Balmer Lawrie & Co, Ld	103, Clive Street	ditto
798	Ling, Samuel	Assistant, Bird & Co	1-1, Clive Street	ditto
799	Linnell, J M	Assistant, Standard Life Assurance Co	32, Dalhousie Square	ditto
800	Linton, Harold Ashley	Assistant, Cooke & Kelvey	20, Old Court House Street	ditto
801	Littlewood, H S	Invoice Clerk, George Henderson & Co, Ld	101-1, Clive Street	ditto
802	Livermore, R	Assistant, J Thomas & Co	8, Mission Row	ditto
803	Lloyd, A C	Assistant, Barry & Co	2, Fairlie Place	ditto
804	Loader, H E	Sub-Editor, Thorne's, Ld	13, Ezra Mansions	ditto
805	Lobo, Joaquim Xavier	Stenographer, *Statesman*, Ld	Statesman House	ditto
806	Lobo, Rumaldo Justinian	Stenographer, *Statesman*, Ld	Statesman House	ditto
807	Lochore, Ian Duncan	Assistant Transport Officer (R S N), Macneill & Co	2, Fairlie Place	ditto
808	Lodrick, F W	Measurer, Bengal Chamber of Commerce	2, Clive Street	ditto
809	Lodrick, L W	Measurer, Bengal Chamber of Commerce	2, Clive Street	ditto
810	Lodrick, S B	Assistant, Lipton, Ld	9, Weston Street	ditto
811	Lofts, W	Assistant, Shaw, Wallace & Co	4, Bankshall Street	ditto

No.	Names.	Style or calling.	Residence or place of business.	Religion.
812	Long, A D	Assistant, I G N & Ry Co, Ld	4, Fairlie Place	Christian
813	Longley, H J	Works Manager, Heatley and Gresham, Ld	6, Waterloo Street	ditto
814	Longhurst, G D	Assistant, Mackinnon Mackenzie & Co	16, Strand Road	ditto
815	Lovering, Arthur James	Assistant, Lyall Marshall & Co	4, Fairlie Place	ditto
816	Lovett, S C	Reader, Govt of India Press	8, Hastings Street	ditto
817	Low, A	Assistant, Bird & Co	1-1, Clive Street	ditto
818	Lucas, T R	Assistant, R V Briggs, Ld	8-B, Lall Bazar Street	ditto
819	Lugg, O W	Assistant, Bird & Co	1-1, Clive Street	ditto
820	Lumsden, John Gordon Babington	Assistant, Hoare Miller & Co, Ld	5, Fairlie Place	ditto
821	Lynch, D F	Assistant, Jessop & Co, Ld	93, Clive Street	ditto
	M			
822	Mabbett, H J B	Assistant, Ranken & Co, Ld	4, Old Court House Street	Christian
823	Macey, T H	Measurer, Bengal Chamber of Commerce	2, Clive Street	ditto
824	MacDougall, J	Assistant, Jardine, Skinner & Co	4, Clive Row	ditto
825	MacFarlane, A F	Assistant, Jardine, Skinner & Co	4, Clive Row	ditto
826	MacFarlane, W	Assistant, Mackinnon, Mackenzie & Co	8, Strand Road	ditto

827	Mack, Davidwhite	Assistant Accountant, National Bank of India, Ld	104, Clive Street	ditto
828	Mackay, N A	Assistant, Heatley & Gresham Ld	6, Waterloo Street	ditto
829	Mackenzie, A	Assistant, Balmer, Lawrie & Co, Ld	103, Clive Street	ditto
830	Mackenzie, Colin	Works Manager, Electric Welding & Manufacturing Co (India), Ld	2, Fairlie Place	ditto
831	Mackenzie, Harish	Assistant, Indo-Burma Petroleum Co, Ld	8, Clive Street	ditto
832	Mackenzie, K A	Assistant, Jardine, Skinner & Co	4, Clive Row	ditto
833	Mackenzie, W H G	Asstt Supdt, P S's Office, E I R	E I R House	ditto
834	Mackie, J S	Architect, Mackintosh Burn, Ld	8, Clive Street	ditto
835	Mackinlay, G M	Assistant, Jardine, Skinner & Co	4, Clive Row	ditto
836	Mackinnon, A	Assistant, Mackinnon, Mackenzie & Co	16, Strand Road	ditto
837	Macklin, Cecil Henry	Assistant, Spencer & Co, Ld	32, Chowringhee	ditto
838	Mackrodt, L N	Assistant, Jessop & Co, Ld	93, Clive Street	ditto
839	Mackrodt, Archibald Vernon	Assistant, Texas Compay (India), Ld	11, Esplanade East	ditto
840	Maclauchlan, Colin Sinclair	Assistant, Davenport & Co, Ld	6, Church Lane	ditto
841	Maclennan, George Hope	Assistant, James Finlay & Co, Ld	1, Clive Street	ditto
842	Maclure, James Wyper	Assistant, Hoare Miller & Co, Ld	5, Fairlie Place	ditto
843	Macmillan, W	Assistant, Babcock & Wilcox, Ld	4, Bankshall Street	ditto

No.	Names.	Style or calling	Residence or place of business.	Religion.
844	Madden, C A	Clerk, Geo Henderson & Co, Ld	101-1, Clive Street	Christian
845	Maddocks, S W	Measurer, Bengal Chamber of Commerce	2, Clive Street	ditto
846	Madge, D C	Measurer, Bengal Chamber of Commerce	2, Clive Street	ditto
847	Maelzer, D J	Assistant, Imperial Chemical Industries (India), Ld	18, Strand Road	ditto
848	Magnoni, B G	Proprietor, B. Magnoni & Co	8, Royal Exchange Place	ditto
849	Maidment, Henry St Clair	Journalist, *Statesman*, Ld	Statesman House	ditto
850	Maitland, Oswald Cyril	Assistant, Ralli Bros, Ld	16, Hare Street	ditto
851	Major, Harry Seymour	Assistant, Llewellyn & Co	9-1, Waterloo Street	ditto
852	Manasseh, Alex	Assistant, Moran & Co, Ld	4, Lyons Range	Jew
853	Mandle, Nathaniel	Reader, *Statesman*, Ld	Statesman House	Christian
854	Mann, G A	Assistant, Mackinnon, Mackenzie & Co	16, Strand Road	ditto
855	Mann, Patrick Wilmot, BA	Assistant, Bengal Secretariat, Political Department	Writers' Buildings	ditto
856	Mann, V N	Measurer, Bengal Chamber of Commerce	2, Clive Street	ditto
857	Manok, E S	Assistant, I G N & Ry Co, Ld	4, Fairlie Place	ditto
858	Mansfield, A	Assistant, Balmer Lawrie & Co, Ld	103, Clive Street	ditto
859	Manuk, Malcolm John	Assistant, Ralli Bros, Ld	16, Hare Street	ditto

860	Margrett, P C	Engineer, G E C (India), Ld	Magnet House, Chittaranjan Avenue (South).	ditto
861	Marcelline, Edwin Carlow	Assistant, South British Insurance Co, Ld	5, Clive Street	ditto
862	Marcon, E L M	Assistant, Superintendent, C O P S Office, E I R	E I R House	ditto
863	Marindin, F Jocelyn deVere, BA(Cantab).	Assistant, Burmah-Shell Co of India, Ld	Hongong House	ditto
864	Marklew, Ernest George	Assistant, Burmah-Shell Co of India, Ld	Hongkong House	ditto
865	Marr, Alexander Andrew	Assistant, Macneill & Co	2, Fairlie Place	ditto
866	Marr, A M	Assistant, McLeod & Co	28, Dalhousie Square	ditto
867	Marrow, C H	Assistant Superintendent, Tele Office, E I R	E I R House	ditto
868	Marsh, R J S	Sub-Accountant, Lloyds Bank, Ld	101-1, Clive Street	ditto
869	Marshall, Arthur Richard	Assistant to the Chief Electrical Engineer, C E S C, Ld	Victoria House	ditto
870	Marshall, Eric Albert	Assistant, Ralli Bros, Ld	16, Hare Street	ditto
871	Marshall, William Henry Allan	Assistant, F W Heilgers & Co	1-1, Clive Street	ditto
872	Martin, Arthur Ridley	Assistant, Ralli Bros, Ld	16, Hare Street	ditto
873	Martin, C A	Measurer, Bengal Chamber of Commerce	2, Clive Street	ditto
874	Martin, Clifford Ridley, BA	Assistant Master, St Thomas' School	58-B, Free School Street	ditto
875	Martin, John	Assistant Accountant, National Bank of India, Ld	104, Clive Street	ditto
876	Martin, J H	Assistant Superintending Engineer, B I S N Co, Ld	16, Strand Road	ditto

No.	Names.	Style or calling	Residence or place of business.	Religion.
877	Martin, Kenneth Bertram	Salesman, Army & Navy Stores, Ld	41, Chowringhee	Christian
878	Martin, K V	Assistant, Imperial Chemical Industries (India), Ld	18, Strand Road	ditto
879	Martin, Martyrose	Assistant, Hoare, Miller & Co, Ld	5, Fairlie Place	ditto
880	Martin, Osmond Kenneth Ridley	Assistant, Ralli Bros, Ld	16, Hare Street	ditto
881	Martin, Percival Spalding	Assistant, Mackenzie, Lyall & Co	5, Mission Row	ditto
882	Martin, R	Surveyor, Mackintosh Burn, Ld	8, Clive Street	ditto
883	Martin, David Henry	Assistant, Walter Bushnell, Ld	21, Old Court House Street	ditto
884	Mason, J A	Assistant, Mackinnon, Mackenzie & Co	8, Strand Road	ditto
885	Mason, William John	Assistant, Stewarts & Lloyds, Ld	6, Royal Exchange Place	ditto
886	Mathew, S B	Claims Inspector, E B R	3, Kaylaghat Street	ditto
887	Mathews, I K, BCom, GDA	Assistant, A-G's Office, Bengal	Treasury Buildings	ditto
888	Mathieson, H	Assistant, Mackinnon, Mackenzie & Co	8, Strand Road	ditto
889	Maunders, E W	Cargo Surveyor, Norman, Stewart & Co	9, Clive Street	ditto
890	May, T G	Assistant, G E C (India), Ld	Magnet House, Chittaranjan Avenue (South).	ditto
891	Mayers, W	Melter, Calcutta Mint	47, Strand Road	ditto
892	McCarthy, Michall John	Sub-Accountant, Mercantile Bank of India, Ld	8, Clive Street	ditto
893	McCaskie, C S	Asstt Supdg Engineer, B I S N Co, Ld	16, Strand Road	ditto

894	McConnel, Thomas Alexander	Assistant, Martin & Harris, Ld	17, Prinsep Street	ditto
895	McCraw, D	Assistant, McLeod & Co	28, Dalhousie Square	ditto
896	McCrea, R H	Assistant, Barry & Co	2, Fairlie Place	ditto
897	McCready, Horace E D Whaley	Assistant, Gillanders Arbuthnot & Co	8, Clive Street	ditto
898	McCulloch, C I	Measurer, Bengal Chamber of Commerce	2, Clive Street	ditto
899	McDonald, D A	Engineer, Calcutta Mint	47, Strand Road	ditto
900	McDonnell, R	Assistant, Heatly & Gresham, Ld	6, Waterloo Street	ditto
901	McEwan, D	Salesman, W H Brady & Co, Ld	Mercantile Buildings	ditto
902	McGowen, Alister	Assistant, Royal Calcutta Turf Club	11, Russell Street	ditto
903	McGregor, D R	Assistant, Innes Watson & Co	15, Clive Street	ditto
904	McIvor, D	Partner, Bright & McIvor	16, Chowringhee	ditto
905	McLaren, G H	Asstt Accountant, *Statesman*, Ltd	Statesman House	ditto
906	McLaren, John	Assistant, Alfred Herbert (India), Ld	13-3, Strand Road	ditto
907	McLeod, K G	Assistant, Andrew Yule & Co, Ld	8, Clive Row	ditto
908	McMullin, D J	P A to C O P S, E I R	E I R House	ditto

No.	Names.	Style or calling.	Residence or place of business.	Religion.
909	McMurtrie, J B	Assistant, Glenfield & Kennedy, Ld	4, Fairlie Place	Christian
910	McWilliam, C A	Assistant, Kilburn & Co	4, Fairlie Place	ditto
911	Meikle, G	Assistant, Balmer, Lawrie & Co, Ld	103, Clive Street	ditto
912	Mendes, Ivan Joseph	Head Assistant, Map Record & Issue Office, Survey of India	13, Wood Street	ditto
913	Mendies, Franklin Irvine	Assistant Superintendent, C E S C, Ld	Victoria House	ditto
914	Mendies, Glyn Eustace	Assistant, W T Henley's Telegraph Works Co, Ld	Old Court House Corner	ditto
915	Mendies, W	Measurer, Bengal Chamber of Commerce	2, Clive Street	ditto
916	Mendieta, Isaac Daniel	Head Assistant, Map Publication Office, Survey of India	13, Wood Street	ditto
917	Merrick, L A	Assistant, Morrison & Cottle, Ld	30-C, Chowringhee	ditto
918	Mersh, G W	Measurer, Bengal Chamber of Commerce	2, Clive Street	ditto
919	Metcalfe, M C	Assistant, Babcock Wilcox, Ld	4, Bankshall Street	ditto
920	Meyer, O J	Measurer, Bengal Chamber of Commerce	2, Clive Street	ditto
921	Michael, Joseph	Assistant, Bird & Co	1-1, Clive Street	ditto
922	Michael, J	Assistant, J Thomas & Co	8, Mission Row	ditto
923	Michael, Percival William	Assistant, Begg, Dunlop & Co, Ld	2, Hare Street	ditto

924	Michelmore, Walter Harold Strachan	Assistant, Bird & Co	1-1, Clive Street	ditto
925	Middleton, Robert George	Assistant, Macneill & Co	2, Fairlie Place	ditto
926	Miller, Alexander	Assistant, A & J Main & Co, Ld	10, Clive Street	ditto
927	Miller, Frederick Arthur Campbell	Assistant, Imperial Bank of India	3, Strand Road	ditto
928	Miller, J E	Assistant, Kilburn & Co	4, Fairlie Place	ditto
929	Miller, Patrick Noel	Assistant, Burmah Shell Co of India, Ltd	Hongkong House	ditto
930	Miller, R S	Assistant, Barry & Co	2, Fairlie Place	ditto
931	Miller, R T	Assistant, Lionel Edwards, Ltd	D-1, Clive Buildings	ditto
932	Mills, A D S	Measurer, Bengal Chamber of Commerce	2, Clive Street	ditto
933	Milne, James Davidson	Assistant, Harnack & Co	10, Old Court House Street	ditto
934	Milner, A G	Assistant, *Statesman*, Ld	Statesman House	ditto
935	Mingoil, David	Assistant, B I S N Co, Ltd	13, Lindsay Street	Jew
936	Minus, A H	Workshop Manager, McGregor & Balfour, Ld	11, Clive Street	Christian
937	Mitchell, M A	Measurer, Bengal Chamber of Commerce	2, Clive Street	ditto
938	Mitchell, Thomas Oliver	Assistant Accountant, National Bank of India, Ltd	104, Clive Street	ditto

No.	Names.	Style or calling.	Residence or place of business.	Religion.
939	Mitchell, William Charles	Salesman, Stephens & Co, Ld	33, Bow Bazar Street	Christian
940	Mitchell-Innes, Wilbert Ernest	Assistant, Hoare, Miller & Co, Ld	5, Fairlie Place	ditto
941	Moffat, J H	Assistant, Jessop & Co, Ltd	93, Clive Street	ditto
942	Moncrieff, F H W	Assistant, Jardine, Skinner & Co	4, Clive Row	ditto
943	Monnier, Rudolph Scipio	Clerk, Machine Tools (India), Ld	Stephen House	ditto
944	Moore, L	Assistant, Jessop & Co, Ld	93, Clive Street	ditto
945	Moras, Lawrence Thomas	Jr Superintendent, Reserve Bank of India	8, Council House Street	ditto
946	Morgan, E	Assistant, Balmer, Lawrie & Co, Ld	103, Clive Street	ditto
947	Morgan, Robert William Davidson	Stock Broker, Stewart & Co	8, Clive Street	ditto
948	Morgenstern, Maxwell	Assistant, Ralli Brothers, Ld	16, Hare Street	ditto
949	Morrell, E	Assistant, Balmer, Lawrie & Co, Ld	103, Clive Street	ditto
950	Morris, M M	Assistant, Standard Vacuum Oil Co	6, Church Lane	ditto
951	Morris, Patrick Bowyer	Assistant, Davenport & Co, Ld	6, Church Lane	ditto
952	Morris, Thomas	Clerk, Bengal Club	33, Chowringhee	ditto
953	Morrison, James Binnie	Assistant, Bengal Chamber of Commerce	2, Clive Street	ditto
954	Morrison, N	Assistant Superintending Engineer, B I S N Co, Ld	16, Strand Road	ditto

955	Morrison, P H	Assistant, Balmer Lawrie & Co, Ld	103, Clive Street	ditto
956	Moss, E J R	Measurer, Bengal Chamber of Commerce	2, Clive Street	ditto
957	Moss, G L W	Assistant, Dunlop Rubber Co (India), Ld	42, Free School Street	ditto
958	Mowle, Lancelot	Salesman, Greaves Cotton & Co, Ld	60, Dharamtala Street	ditto
959	Mowle, R C	Assistant, Jardine, Skinner & Co	4, Clive Row	ditto
960	Mudie, D M	Asstt Supdtg Engr, B I S N Co, Ltd	16, Strand Road	ditto
961	Muir, J H	Assistant, James Finlay & Co, Ld	1, Clive Street	ditto
962	Muller, C H E	Assistant, Balmer, Lawrie & Co, Ld	103, Clive Street	ditto
963	Mullins, G E	Assistant, Burmah Shell Co of India, Ld	Hongkong House	ditto
964	Mullock, Denis Wilson, BA(Cantab)	Assistant, Burmah Shell Co of India, Ld	Hongkong House	ditto
965	Munro, St E G	Measurer, Bengal Chamber of Commerce	2, Clive Street	ditto
966	Murgatroyd, F W	Clerk, C C M's Office, E I R	E I R House	ditto
967	Murison, Alister Ian	Assistant, James Finlay & Co, Ld	1, Clive Street	ditto
968	Murtough, H A	Assistant, Hoare Miller & Co, Ld	5, Fairlie Place	ditto
969	Murray, C B	Measurer, Bengal Chamber of Commerce	2, Clive Street	ditto
970	Musleah, E M	Inspector, C E S C, Ld	Victoria House	Jew
971	Musselwhite, A, ARIS	Manager, Bourne & Shepherd	141, Corporation Street	Christan

No.	Names.	Style or calling.	Residence or place of business.	Religion.
	N			
972	Needham, Frederick William	Assistant, Graham Roberts & Co	5, Fairlie Place	Christian
973	Nelson, Horace Frank Hamilton	Assistant, Martin & Co	12, Mission Row	ditto
974	Nelson, John Lightbody	Assistant, Caledonian Insurance Co	8, Clive Street	ditto
975	Nelson, P	Assistant, McLeod & Co	28, Dalhousie Square	ditto
976	Nestor, Edwin Roy, BSc	Assistant Master, Calcutta Boys' School	72, Corporation Street	ditto
977	Neunes, George	Assistant, Greaves Cotton & Co, Ld	60, Dharamtala Street	ditto
978	Neubo, Ashley Charles	Assistant Accountant, T E Thomson & Co, Ld	9, Esplanade, East	ditto
979	Neville, G W C	Assistant, Lovelock & Lewes	4, Lyons Range	ditto
980	Neville-Scott, Guy Richmond	Reviser, *Statesman*, Ld	Statesman House	ditto
981	Newbond, Arthur Joseph	Reader, W Newman & Co, Ld	3, Old Court House Street	ditto
982	Newby, E H	Assistant, Jardine Skinner & Co	4, Clive Row	ditto
983	Newing, E R	Assistant, Hall & Anderson, Ld	31, Chowringhee	ditto
984	Newling, Vernon Henry	Engineer, F & C Osler, Ld	12, Old Court House Street	ditto
985	Newman, John Sydney	Assistant, Ralli Bros, Ld	16, Hare Street	ditto
986	Newson, A P	Assistant, Brooke Bond (India), Ld	2, Metcalfe Street	ditto

987	Newton, J A	Assistant, Octavious Steel & Co, Ltd	14, Old Court House Street	ditto
988	Newton, William Joseph	Assistant, Pigott Chapman & Co	6, Lyons Range	ditto
989	Niblett, Alexander Vernon	Assistant, Martin & Co	12, Mission Row	ditto
990	Nicholls, C F	Measurer, Bengal Chamber of Commerce	2, Clive Street	ditto
991	Nicholson, D	Engineer, G E C (India), Ld	Magnet House, Chittaranjan Avenue (South).	ditto
992	Nicolson, Thomas Frederick	Assistant, Blackwood, Bryson & Co Ld	2, Mangoe Lane	ditto
993	Nimmo, John Atholl Duncan, BA	Assistant, Duncan Brothers & Co, Ld	101, Clive Street	ditto
994	Noah, Ezekiel	Clerk, Army & Navy Stores, Ltd	41, Chowringhee	Jew
995	Noble, C S	Assistant, Mackinnon Mackenzie & Co	16, Strand Road	Christian
996	Noney, Robert Wallace	Stores Manager, A Milton & Co, Ld	156, Dharamtala Street	ditto
997	Norrish, A E	Assistant, Hall & Anderson, Ld	31, Chowringhee	ditto
998	Norwood, Wilfred Arthur	Assistant, Accountant, National Bank of India, Ld	104, Clive Street	ditto
999	Nulty, D J	Assistant, Balmer Lawrie & Co, Ld	103, Clive Street	ditto
1000	Nunn, Eric Herbert	Assistant, office of the I G of Police	Writers' Buildings	ditto
1001	Nunn, Lionel John	Clerk, Bengal Club	33, Chowringhee	ditto

No.	Names.	Style or calling.	Residence or place of business.	Religion.
	O			
1002	Oakley, R J L	Assistant, Kilburn & Co	4, Fairlie Place	Christian
1003	O'Connor, T A	Overhead and Cable Superintendent, Calcutta Tramways Co, Ld	7, Church Lane	ditto
1004	O'driscol, J O	Assistant, Ivan Jones, Ld	8, Dalhousie Square, East	ditto
1005	Odgers, Hector George	Sales Representative, Elford Edwards, Ltd	7, Old Court House Street	ditto
1006	Odgers, Leonard	Accountant, A Milton & Co, Ld	156, Dharamtala Street	ditto
1007	Ogilvie, Alec Drummond	Assistant, Andrew Yule & Co, Ltd	8, Clive Row	ditto
1008	Ogilvie, G C	Assistant, I G N & Ry Co, Ld	4, Fairlie Place	ditto
1009	Oliver, R	Assistant, Turner, Morrison & Co, Ld	6, Lyons Range	ditto
1010	Oliver, W J	L G S Officer, C O P S Office, E I R	E I R House	ditto
1011	Ortiger, John	Assistant, Worthington-Simpson, Ltd	10, Clive Street	ditto
1012	Osborne, M D	Architect, Macintosh Burn, Ld	8, Clive Street	ditto
1013	Osborne, W H	Measurer, Bengal Chamber of Commerce	2, Clive Street	ditto
1014	Oswald, James	Assistant, Balmer, Lawrie & Co, Ld	103, Clive Street	ditto
1015	Otto, F L	Assistant, Shaw, Wallace & Co	4, Bankshall Street	ditto
	P			
1016	Page, Eric Howard	Assistant, Begg, Dunlop & Co, Ld	2, Hare Street	Christian
1017	Paine, George Richard Montgomery	Assistant, Gillanders, Arbuthnot & Co	8, Clive Street	ditto

1018	Painter, Geoffrey Sheppard	Assistant, Burmah Shell Co of India, Ld	Hongkong House	ditto
1019	Pais, Vincent Ignatius	Assistant, Imperial Bank of India	3, Strand Road	ditto
1020	Palmer, Harold William	Assistant, Bird & Co	1-1, Clive Street	ditto
1021	Papworth, L	Foreman, Remington Rand, Inc	3, Council House Street	ditto
1022	Parish, Patrick Edward Gladstone Woodbine.	Assistant, Gillanders, Arbuthnot & Co	8, Clive Street	ditto
1023	Parker, E S	Assistant, T E Bevan & Co, Ld	Grosvenor House	ditto
1024	Parker, Paul Richards	Examiner of Stores, Indian Stores Department (Inspection)	6, Esplanade, East	ditto
1025	Parsons, R C	Inspector of Factories, Bengal	40-1A, Free School Street	ditto
1026	Paterson, D J	Assistant, Jardine Skinner & Co	4, Clive Row	ditto
1027	Paterson, George Duncan	Assistant, Moran & Co, Ld	4, Lyons Range	ditto
1028	Paterson, Hector MacDonald	Assistant, Bird & Co	1-1, Clive Street	ditto
1029	Paterson, J A C	Assistant, McLeod & Co	28, Dalhousie Square	ditto
1030	Paton, A B G	Assistant, A & S Henry & Co, Ld	7, Grosvenor House	ditto
1031	Paton, David Johnston	Assistant, King Bros	102, Clive Street	ditto
1032	Paton, J M	Assistant, McLeod & Co	28, Dalhousie Square	ditto
1033	Paul, Herbert	Assistant, Blackwood, Bryson Co, Ld	2, Mangoe Lane	ditto

No.	Names.	Style or calling.	Residence or place of business.	Religion.
1034	Paul, J Jones, BSC	Clerk, D A G P & T Office	7, Koilaghat Street	Christian
1035	Paul, J L	Assistant, Jessop & Co, Ld	93, Clive Street	ditto
1036	Paull, R C	Assistant, T E Bevan & Co, Ld	Grosvenor House	ditto
1037	Payne, Archibald Bestra	Purchase Clerk, Bengal Iron Co, Ld	4, Lyons Range	ditto
1038	Payne, R W	Measurer, Bengal Chamber of Commerce	2, Clive Street	ditto
1039	Peacock, D	Sub-Accountant, Chartered Bank of India, Australia and China	1-1, Clive Street	ditto
1040	Peacock, Philip Harold	Assistant, Army and Navy Stores, Ld	41, Chowringhee	ditto
1041	Pearce, D	Assistant, J Thomas & Co	8, Mission Row	ditto
1042	Pearson, Herbert Frederick	Assistant, *Statesman*, Ld	Statesman House	ditto
1043	Pearson, John Patrick, BA (Oxon.)	Asstt Manager, United Steel Cos (India), Ld	2, Avenue House, Chowringhee Square	ditto
1044	Peddar, A W	Assistant, Babcock & Wilcox, Ld	4, Bankshall Street	ditto
1045	Penheiro, F	Assistant, Hall & Anderson, Ld	31, Chowringhee	ditto
1046	Pentland, H J	Assistant, Mackinnon Mackenzie & Co	16, Strand Road	ditto
1047	Pentony, Llewellyn Richard	Assistant, F W Heilgers & Co	1-1, Clive Street	ditto
1048	Peppercorn, A J	Assistant, McLeod & Co	28, Dalhousie Square	ditto
1049	Pereira, A	Assistant, Jessop & Co, Ld	93, Clive Street	ditto

1050	Pereira, Arthur Ivan	Assistant, British Refrigerators	30, Chowringhee	ditto
1051	Pereira, A E	Assistant, Hall & Anderson, Ld	31, Chowringhee	ditto
1052	Perry, B	Assistant, James Murray & Co	5, Old Court House Street	ditto
1053	Perry, R B P	Sub-Accountant, Lloyd's Bank, Ld	101-1, Clive Street	ditto
1054	Peters, Charles Stanley, BSc	Examiner of Accounts, I T Office	6, Esplanade East	ditto
1055	Peters, P R	Rates Clerk, C C M's Office, E I R	E I R House	ditto
1056	Peters, R E	Assistant, Balmer, Lawrie & Co, Ld	103, Clive Street	ditto
1057	Peters, R G	Measurer, Bengal Chamber of Commerce	2, Clive Street	ditto
1058	Peters, W W	Assistant, Lovelock & Lewes	4, Lyons Range	ditto
1059	Peterson, John William, BA	Assistant Master, St Thomas' School	58-B, Free School Street	ditto
1060	Petrie, G P	Assistant, McGregor & Balfour, Ld	11, Clive Street	ditto
1061	Phillippe, Eugene Alefis	Assistant Engineer, *Statesman*, Ld	Statesman House	ditto
1062	Phillips, A	Assistant, Mackinnon, Mackenzie & Co	8, Strand Road	ditto
1063	Phillips, E C	Sub-Accountant, Chartered Bank of India, Australia & China	1-1, Clive Street	ditto
1064	Phillips, Harry George	Litho Machine Printer, Photo-Litho Office, Survey of India	14, Wood Street	ditto
1065	Phillips, Herbert Angus Pengelly	Master, Elias Meyer Free School and Talmud Torah	50, Bowbazar Street	ditto

No.	Names.	Style or calling.	Residence or place of business.	Religion.
1066	Phillips, Thomas Mafeking	Assistant, Marconi I.M.C. Co, Ld	6, Old Post Office Street	Christian
1067	Phoenix, N B	Spl Inspector, Traffic Dept, E B R	3, Koilaghat Street	ditto
1068	Pierce, E	Assistant, Jessop & Co, Ld	93, Clive Street	ditto
1069	Pierson, S C F	Assistant, J Thomas & Co	8, Mission Row	ditto
1070	Piffard, Hume	Assistant, Burmah Shell Co of India, Ld	Hongkong House	ditto
1071	Pinto, Bernard	Assistant, Commercial Credit Corporation, Ld	20, Park Street	ditto
1072	Pithie, Edward John	Salesman, Birla Brothers, Ld	8, Royal Exchange Place	ditto
1073	Platel, A J	Assistant, Balmer, Lawrie & Co, Ld	103, Clive Street	ditto
1074	Platel, R E, BA	Inspector Surveyor, I T Office	3, Government Place, West	ditto
1075	Playfair, Arthur Melville	Assistant, Macneill & Co	2, Fairlie Place	ditto
1076	Plested, S J	Assistant, Mackinnon Mackenzie & Co	16, Strand Road	ditto
1077	Pluck, John Robert Fred	Assistant, Burmah Shell Co of India, Ld	Hongkong House	ditto
1078	Poke, Ernest Bertram	Assistant, I R G P & T W Co, Ld	7, Old Court House Street	ditto
1079	Pole, Ronald Wallace	Assistant, Kodak, Ld	22, Canning Street	ditto
1080	Ponting, E A	Counter Clerk, The Dunlop Rubber Co (India), Ld	42, Free School Street	ditto
1081	Popovits, D M	Chief Store Keeper, G E C (India), Ld	Magnet House, Chittaranjan Avenue (South).	ditto

1082	Pordage, D	Measurer, Bengal Chamber of Commerce	2, Clive Street	ditto
1083	Porter, A L	Assistant, Brooke Bond (India), Ld	2, Metcalfe Street	ditto
1084	Porter, I L W	Clerk, Dunlop Rubber Co (India), Ld	42, Free School Street	ditto
1085	Porthouse, A D	Assistant, I G N & Ry Co, Ld	4, Fairlie Place	ditto
1086	Portugal, Brian	Asstt Manager, Louis Drefus & Co	2, Clive Row	ditto
1087	Pote, F G	Assistant, Turner, Morrison & Co, Ld	6, Lyons Range	ditto
1088	Potter, J	Assistant, Phœnix Assurance Co, Ld	28, Dalhousie Square	ditto
1089	Poulton, Frank	Journalist, *Statesman*, Ld	Statesman House	ditto
1090	Powell, Geoffrey Edward	Journalist, *Statesman*, Ld	Statesman House	ditto
1091	Powell, L A	Assistant Accountant, The P & O Banking Corpn, Ld	1, Fairlie Place	ditto
1092	Power, A T	Stenographer, Imperial Chemical Industries (India), Ld	18, Strand Road	ditto
1093	Power, H	Assistant, Jessop & Co, Ld	93, Clive Street	ditto
1094	Pratt, T H	Assistant, Cargo Supdt, B I S N Co, Ld	8, Strand Road	ditto
1095	Preece, Morley Cutlack	Advt Canvasser, " Star of India "	3, Wellesley Place	ditto
1096	Pritchard, John	Assistant, Ludlow Jute Co, Ld	7, Royal Exchange Place	ditto
1097	Pritchard, John	Assistant, Whiteaway Laidlaw & Co, Ld	7, Chowringhee	ditto
1098	Proctor, Donald Henry Torrence	Sales Representative, Elford Edwards, Ld	7, Old Court House Street	ditto

No.	Names.	Style or calling	Residence or place of business.	Religion.
1099	Prosser, T S	Assistant, A M Mair & Co	6, Royal Exchange Place	Christian
1100	Pulleyn, Charles Bertram	Assistant, Spencer & Co, Ld	32, Chowringhee	ditto
1101	Purdy, J	Assistant, Mackinnon Mackenzie & Co	16, Strand Road	ditto
1102	Purser, B M	Sub-Accountant, Chartered Bank of India Australia and China	1-1, Clive Street	ditto
1103	Pyne, H C	Assistant, Jessop & Co, Ld	93, Clive Street	ditto
	Q			
1104	Quayle, H M	Assistant Accountant, Calcutta Tramways Co, Ld	7, Church Lane	Christian
1105	Quick, K J	Assistant, G E C (India), Ld	Magnet House, Central Avenue (South)	ditto
1106	Quigley, Richard	Assistant, Samuel Fitze & Co, Ld	26, Chowringhee	ditto
1107	Quin, John Simpson	Assistant, Macneill & Co	2, Fairlie Place	ditto
	R			
1108	Rae, J	Sub-Accountant, Chartered Bank of India, Australia & China	1-1, Clive Street	Christian
1109	Rankin, E H	Assistant, Standard Vacuum Oil Co	6, Church Lane	ditto
1110	Raymond, Abraham	Assistant, Senda & Co (India), Ld	135, Canning Street	Jew
1111	Rayner, James Bryan FitzGerald	Assistant, Davenport & Co, Ld	6, Church Lane	Christian
1112	Raynor, Vernon H (Capt)	Salesman, Godrej & Boyce Mfg Co, Ld	102, Clive Street	ditto
1113	Read, E I Rendell	Engineer, G E C (India), Ld	Magnet House, Central Avenue (South)	ditto

1114	Read H	Assistant, Palmer Lawrie & Co, Ld	103, Clive Street	ditto
1115	Rearden, George F	Circuit Manager, Humayun Properties, Ld	1, Humayun Place	ditto
1116	Rebello, F J	Assistant, Stephens & Co	33, Bowbazar Street	ditto
1117	Reid, Alexander McLean	Journalist, *Statesman*, Ld	Statesman House	ditto
1118	Reid, Athole William	Assistant, Macneill & Co	2, Fairlie Place	ditto
1119	Reid, B C	Measurer, Bengal Chamber of Commerce	2, Clive Street	ditto
1120	Reid, Donald Allan	Assistant, Pigott, Chapman & Co	6, Lyons Range	ditto
1121	Reid, H E	Measurer, Bengal Chamber of Commerce	2, Clive Street	ditto
1122	Reid, J E	Engineer, G E C (India), Ld	Magnet House, Chittaranjan Avenue (South)	ditto
1123	Reid, M D	Assistant, Turner Morrison & Co, Ld	6, Lyons Range	ditto
1124	Rembold, Joseph Mark	Assistant, Burmah Shell Co of India, Ld	Hongkong House	ditto
1125	Remedios, A	Assistant, Gladstone, Wyllie & Co	4, Fairlie Place	ditto
1126	Remedios, Aquino	Clerk, Prudential Assurance Co, Ld	Clive Buildings	ditto
1127	Remedios, Edward Francis Lewis	Assistant, Bengal Chamber of Commerce	2, Clive Street	ditto
1128	Renwick, H M	Assistant, Geo Henderson & Co, Ld	101-1, Clive Street	ditto
1129	Revis, W	Draftsman, C M E's Office, E I R	E I R House	ditto
1130	Reynolds, Kenneth Richardson	Assistant, Macneill & Co	2, Fairlie Place	ditto

No.	Names.	Style or calling.	Residence or place of business.	Religion.
1131	Rhodes, Keith Wemyss	Assistant, Hoare Miller & Co, Ld	5, Fairlie Place	Christian
1132	Rhodes, Samuel N, BA (Birmingham)	Assistant Master, La Martinière	11, Loudon Street	ditto
1133	Ribeiro, Sydney	Assistant, Office of the Zoological Survey of India	Indian Museum	ditto
1134	Rich, Stanley Frederick	P A to Mg Director, Walford Transport, Ld	71-73, Park Street	ditto
1135	Richards, William	Office Superintendent, I B Petroleum Co, Ld	8, Clive Street	ditto
1136	Rickard, R M	Assistant, David Sassoon & Co, Ld	4, Lyons Range	ditto
1137	Ricketts, Cyril Bertram	Assistant, Ralli Brothers, Ld	16, Hare Street	ditto
1138	Ricketts, Raymond Dunsford	Assistant, Ralli Brothers, Ld	16, Hare Street	ditto
1139	Ridley, Edward Hybart	Assistant, Harman & Co, Ld	11, Government Place	ditto
1140	Ridsdale, L A	Engineer, Calcutta Mint	47, Strand Road	ditto
1141	Rigby, J	Assistant, Price, Waterhouse, Peat & Co	B-4, Clive Buildings	ditto
1142	Rigby, William James	Engineer, W & T Avery, Ld	11, Crooked Lane	ditto
1143	Rind, Gilbert McNeil	Sub-Accountant, Mercantile Bank of India, Ld	8, Clive Street	ditto
1144	Ritchie, James McPhil	Assistant, Bird & Co	1-1, Clive Street	ditto
1145	Ritchie, John Smith	Sub-Accountant, Mercantile Bank of India, Ld	8, Clive Street	ditto
1146	Rivers, W F	Assistant, Standard Vacuum Oil Co	6, Church Lane	ditto
1147	Rivett, A T	Assistant Traffic Manager, Calcutta Tramways Co, Ld	7, Church Lane	ditto

1148	Roberts, C	Assistant, The Indian and Eastern Engineering Co, Ld	5, Mission Row	ditto
1149	Roberts, F	Clerk, C M E's Office, E I R	E I R House	ditto
1150	Roberts, John H	Godown Manager, Baldwin Locomotive Works	5, Dalhousie Square	ditto
1151	Robertson, A	Assistant, Barry & Co	2, Fairlie Place	ditto
1152	Robertson, Bertram Gerald	Superintendent, Town Hall	4, Esplanade, West	ditto
1153	Robertson, C A	Measurer, Bengal Chamber of Commerce	2, Clive Street	ditto
1154	Robertson, Francis Edmund	Assistant, Commercial Intelligence Department, India	1, Council House Street	ditto
1155	Robertson, Henry Leslie	Assistant, Hoare, Miller & Co, Ld	5, Fairlie Place	ditto
1156	Robinson, Donald	Assistant, F W Heilgers & Co	1-1, Clive Street	ditto
1157	Robinson, Frank Cecil	Office Manager, George Spencer, Moulton & Co (India), Ld	8, Esplanade, East	ditto
1158	Robinson, J E	Assistant Superintendent, C O S Office, E I R	E I R House	ditto
1159	Robinson, W B	Assistant Coal Manager, E I R	E I R House	ditto

No.	Names.	Style or calling.	Residence or place of business.	Religion.
1160	Rodgers, J R	Assistant, Jessop & Co, Ld	93, Clive Street	Christian
1161	Rodrigues, F	Assistant, Hall & Anderson, Ld	31, Chowringhee	ditto
1162	Rodrigues, J C	Publicity Clerk, C C M's Office, E I R	E I R House	ditto
1163	Rodrigues, Lawrence	Assistant, Govan Bros, Ld	20, Park Street	ditto
1164	Rodriques, D S	Clerk, Dunlop Rubber Co (India), Ld	42, Free School Street	ditto
1165	Roger, W D	Assistant, J Thomas & Co	8, Mission Row	ditto
1166	Rogers, L F	Account Executive, D J Keymer & Co, Ld	4, Lyons Range	ditto
1167	Rogers, William	Assistant, Lyall Marshall & Co	4, Fairlie Place	ditto
1168	Ronaldson, S	Assistant, Mackinnon, Mackenzie & Co	16, Strand Road	ditto
1169	Rooke, W A	Assistant, Bird & Co	1-1, Clive Street	ditto
1170	Rooke, W H	Measurer, Bengal Chamber of Commerce	2, Clive Street	ditto
1171	Rose, A J	Assistant Accountant, Port Commissioners' Office	Strand Road	ditto
1172	Rose, H H	Assistant, Balmer, Lawrie & Co, Ld	103, Clive Street	ditto

1173	Ross, D E A	Measurer, Bengal Chamber of Commerce	2, Clive Street	ditto
1174	Ross, John Horatio Hardcastle	Assistant, James, Finlay & Co, Ld	1, Clive Street	ditto
1175	Ross, John	Assistant, Landale & Clark, Ld	11, Clive Street	ditto
1176	Rotshton, G L	Assistant, Price, Waterhouse, Peat & Co	B-4, Clive Buildings	ditto
1177	Rowe, William Stacey	Sub-Accountant, Grindlay & Co, Ld	6, Church Lane	ditto
1178	Rowe, D L V	Assistant, Price, Waterhouse, Peat & Co	B-4, Clive Buildings	ditto
1179	Rowland, J A	Audit Inspector, Port Commissioners' Office	Strand Road	ditto
1180	Royle, Kenneth Brooks	Assistant, Planters' Stores & Agency Co, Ld	11, Clive Street	ditto
1181	Rozario, A D	Section-Holder, P S Office, E I R	E I R House	ditto
1182	Rundlett, R C	Assistant, Jessop & Co, Ld	93, Clive Street	ditto
1183	Runge, Conrad	Assistant, W H Harton & Co, Ld	5, Clive Ghat Street	ditto
1184	Russell, Joseph	Salesman, C C Wakefield & Co, Ld	7, Royal Exchange Place	ditto

No.	Names.	Style or calling.	Residence or place of business.	Religion.
1185	Ruthven, F D	Assistant, Landale & Morgan	3, Fairlie Place	Christian
1186	Ryan, Alfred George	Mains Jointer, C E S C, Ld	Victoria House	ditto
1187	Ryan, Danial O'Connell	Assistant, Landale & Clark, Ld	11, Clive Street	ditto

S

1188	Salmond, J	Assistant Accountant, National Bank of India, Ld	104, Clive Street	Christian
1189	Sample, C G	Assistant, Standard Vacuum Oil Co	6, Church Lane	ditto
1190	Samuel, Alexander	Stenographer, *Statesman*, Ld	Statesman House	ditto
1191	Samuel, Benjamin	Assistant, Tata Iron & Steel Co, Ld	100, Clive Street	Jew
1192	Samuel, Joseph	Draftsman, No. I, Drawing office, Survey of India	13, Wood Street	Christian
1193	Samuel, Stanley	Stenographer, Metro-Goldwyn-Mayer, India, Ld	5, Chowringhee Road	ditto
1194	Samuel, Sushil	Assistant, Mackinnon, Mackenzie & Co	8, Strand Road	ditto

1195	Samuels, G	Assistant, G Rogers & Co	5, Dalhousie Square, East	ditto
1196	Samuels, Leslie Henry	Assistant, London & Lancashire Insurance Co, Ld	2, Fairlie Place	ditto
1197	Sandelands, D I	Assistant, McLeod & Co	28, Dalhousie Square	ditto
1198	Sara, S E	Assistant, Balmer Lawrie & Co, Ld	103, Clive Street	ditto
1199	Saunders, Alfred William	Engineer, Linotype & Machinery, Ld	21, Bowbazar Street	ditto
1200	Savidra, J A	Claims Inspector, E B R	3, Koilaghat Street	ditto
1201	Saxty, J G	Clerk, Dunlop Rubber Co (India), Ld	42, Free School Street	ditto
1202	Scott, A W	Assistant, J Thomas & Co	8, Mission Row	ditto
1203	Scott, Claude John	Sub-Editor, *Statesman*, Ld	Statesman House	ditto
1204	Scott, David Baillie	Assistant, Bird & Co	1-1, Clive Street	ditto
1205	Scott, Sidney Murray	Assistant, Burmah Shell Co of India, Ld	Hongkong House	ditto
1206	Scott, W B	Assistant, Remington Rand, Inc	3, Council House Street	ditto
1207	Scrimgeour, Frank Henry Vernon	Assistant, Duncan Bros & Co, Ld	101, Clive Street	ditto

No.	Names.	Style or calling.	Residence or place of business.	Religion.
1208	Scurrah, Maurice Shaw	Assistant, *Statesman*, Ld	Statesman House	Christian
1209	Scutt, Keith William, B A	Assistant, D J Keymer & Co, Ld	4, Lyons Range	ditto
1210	Seaman, E	Assistant, Allen & Hanburys, Ld	C-3, Clive Buildings	ditto
1211	Seignior, Capt C H Townsend	Marine Superintendent, Macneill & Co	2, Fairlie Place	ditto
1212	Selfe, Frank Edward	Assistant Head Engraver, Engraving Office, Survey of India	13, Wood Street	ditto
1213	Sellars, W H	Assistant, D J Keymer & Co, Ld	4, Lyons Range	ditto
1214	Sevilton, I L Owen	Salesman, Minimax Ld	Mercantile Buildings	ditto
1215	Sharman, D	Assistant, Kilburn & Co	4, Fairlie Place	ditto
1216	Sharp, W	Assistant, Thomas Duff & Co, Ld	3, Clive Row	ditto
1217	Shaw, C M	Assistant, G E C (India), Ld	Magnet House, Chittaranjan Avenue (South).	ditto
1218	Shaw, Edward Barrie	Sub-Editor, *Statesman*, Ld	Statesman House	ditto
1219	Shaw, Joseph West	Salesman, Roneo, Ld	32-1, Dalhousie Square	ditto

1220	Shaw, R	Assistant, Barry & Co	2, Fairlie Place	ditto
1221	Sheehan, F G	Assistant, Remington Rand, Inc	3, Council House Street	ditto
1222	Shellenberger, H R	Assistant, Standard Vacuum Oil Co	6, Church Lane	ditto
1223	Sheriff, R	Assistant, Hall & Anderson, Ld	31, Chowringhee	ditto
1224	Sherman, Harold Randolf	Assistant Manager, Walford Transport, Ld	71-73, Park Street	ditto
1225	Shircore, W	Assistant, Grahams Trading Co (India), Ld	6, Lyons Range	ditto
1226	Shirtcliffe, J F	Assistant, Ocean Accident & Guarantee Corporation, Ld	32-1, Dalhousie Square, South	ditto
1227	Shuldham, D P	Assistant, Gladstone, Wyllie & Co	4, Fairlie Place	ditto
1228	Shute, J K	Sub-Accountant, Lloyds Bank, Ld	101-1, Clive Street	ditto
1229	Shuttleworth, Leslie	Assistant, F W Heilgers & Co	1-1, Clive Street	ditto
1230	Siddons, J	Assistant, W H Targett & Co	1, Commercial Buildings	Jew
1231	Silas, Abraham	Assistant, David, Sassoon & Co, Ld	4, Lyons Range	ditto
1232	Silver, L C	Measurer, Bengal Chamber of Commerce	2, Clive Street	Christian
1233	Simons, Arthur Lionel	Assistant Master, St Thomas' School	58-B, Free School Street	ditto

No.	Names.	Style or calling.	Residence or place of business.	Religion.
1234	Simpson, A G	Assistant, George Henderson & Co, Ld	101-1, Clive Street	Christian
1235	Simpson, A L	Engineer, Calcutta Mint	47, Strand Road	ditto
1236	Simpson, A L	Assistant, Balmer, Lawrie & Co, Ld	103, Clive Street	ditto
1237	Simpson, Balfour Bruce	Assistant, Moran & Co, Ld	4, Lyons Range	ditto
1238	Simpson, G H	Salesman, Marshall Sons & Co (India), Ld	99, Clive Street	ditto
1239	Simpson, T R	Assistant, Burn & Co, Ld	12, Mission Row	ditto
1240	Sims, E H	Assistant, Guest, Keen, Williams, Ld	7, Council House Street	ditto
1241	Sinclair, Ernest Gordon	Assistant, Gillanders, Arbuthnot & Co	8, Clive Street	ditto
1242	Sinclair, H G	Assistant, Balmer Lawrie & Co, Ld	103, Clive Street	ditto
1243	Sinclair, W J	Assistant, Octavius Steel & Co, Ld	14, Old Court House Street	ditto
1244	Sinclair-Day, Dennis	Advertising Manager, Lipton, Ld	9, Weston Street	ditto
1245	Sitwell, Isla William Hurt	Assistant, Burmah Shell Co of India, Ld	Hongkong House	ditto
1246	Skelhorn, Charles Arjuna	Assistant-in-charge, Shipping Department, Grindlay & Co, Ld	6, Church Lane	ditto
1247	Skinner, A G	Assistant, Jessop & Co, Ld	93, Clive Street	ditto

1248	Skinner, F W B	Measurer, Bengal Chamber of Commerce	2, Clive Street	ditto
1249	Skinner, P W S	Sub-Accountant, Chartered Bank of India, Australia and China	1-1, Clive Street	ditto
1250	Slade, S	Assistant, Lipton, Ld	9, Weston Street	ditto
1251	Small, C O	Assistant, McLeod & Co	28, Dalhousie Square	ditto
1252	Smallwood, R P F	Assistant, Ocean Accident & Guarantee Corporation, Ld	32-1, Dalhousie Square, South	ditto
1253	Smart, George Peter	Sub-Accountant, Grindlay & Co, Ld	6, Church Lane	ditto
1254	Smethurst, Thomas Victor	Mains Jointer, C E S C, Ld	Victoria House	ditto
1255	Smith, A	Dy Traffic Manager, Calcutta Tramways Co, Ld	7, Church Lane	ditto
1256	Smith, A C	Examiner of Accounts, Income-tax Office	3, Government Place, West	ditto
1257	Smith, A K	Sub-Accountant, Chartered Bank of India, Australia and China	1-1, Clive Street	ditto
1258	Smi h, C V	Proprietor, City Press	9, Strand Road	ditto
1259	Smith, D M	Engineer, G E C (India), Ld	Magnet House, Central Avenue (South)	ditto
1260	Smith, D S	Assistant, Landale & Morgan	3, Fairlie Place	ditto
1261	Smith, Edward Alexander	Mains Jointer, C E S C, Ld	Victoria House	ditto

No.	Name.	Style or calling.	Residence or place of business.	Religion.
1262	Smith, Eric Baird	Assistant, Fraser & Co, Ld	4, Fairlie Place	Christian
1263	Smith, Frank Gwyther	Assistant, F C Pallachi & Co	7, Royal Exchange Place	ditto
1264	Smith, G	Assistant, G E C (India), Ld	Magnet House, Chittaranjan Avenue (South)	ditto
1265	Smith, Henry Malcolm	Assistant, Hoare Miller & Co, Ld	5, Fairlie Place	ditto
1266	Smith, J	Assistant, J Thomas & Co	8, Mission Row	ditto
1267	Smith, John Sydney	Assistant, Landale & Morgan	3, Fairlie Place	ditto
1268	Smith, Kenneth Waldo	Traveller, Alfred Herbert (India), Ld	13-3, Strand Road	ditto
1269	Smith, Kenneth Weir	Assistant Accountant, National Bank of India, Ld	104, Clive Street	ditto
1270	Smith, R	Assistant, Jessop & Co, Ld	93, Clive Street	ditto
1271	Smith, S	Assistant, Brooke Bond (India), Ld	2, Metcalfe Street	ditto
1272	Smith, Stanley Gwyther	Assistant, Bird & Co	1-1, Clive Street	ditto
1273	Smith, W H	Assistant, Thacker's Press and Directories, Ld	6-B, Bentinck Street	ditto
1274	Smith, V A	Assistant Accourtant, Calcutta Tramways Co, Ld	7, Church Lane	ditto

1275	Smythe, E M	Assistant Jardine, Skinner & Co	4, Clive Row	ditto
1276	Snellekez, H W	Superintendent, Landing and Shipping Dept, B I S N Co, Ld	8, Strand Road	ditto
1277	Snow, J W	Assistant, Dunlop Rubber Co (India), Ld	42, Free School Street	ditto
1278	Soloman, A E	Assistant, Ivan Jones, Ld	8, Dalhousie Square, East	Jew
1279	Somerville, A D	Assistant, Jardine, Skinner & Co	4 Clive Row	Christian
1280	Soubolle, Montfort Gervase	Assistant, Bengal Chamber of Commerce	2, Clive Street	ditto
1281	Souce, C A	Measurer, Bengal Chamber of Commerce	2, Clive Street	ditto
1282	Spark, F	Salesman, Remington Rand, Inc	3, Council House Street	ditto
1283	Sparkes, Eric Arthur	Assistant-in-charge, Passage Department, Grindlay & Co, Ld	6, Church Lane	ditto
1284	Spencer, H J	Assistant, Calcutta Mint	47, Strand Road	ditto
1285	Stack, C	Assistant, Dunlop Rubber Co (India), Ld	42, Free School Street	ditto
1286	Stack, G G	Assistant, Dunlop Rubber Co (India), Ld	42, Free School Street	ditto
1287	Stafford, D M	Assistant, Mackinnon Mackenzie & Co	16, Strand Road	ditto
1288	Stalker, J H	Assistant, Thomas Duff & Co, Ld	3, Clive Row	ditto
1289	Standish, N	Assistant, McLeod & Co	28, Dalhousie Square	ditto
1290	Stanley, D R	Assistant, Balmer, Lawrie & Co, Ld	103, Clive Street	ditto

No.	Names.	Style or calling.	Residence or place of business.	Religion.
1291	Stanmore, E J H	Store-keeper, Machine Tools (India), Ld	Stephen House	Christian
1292	Stannard, Leonard Russell	Assistant, Army & Navy Stores, Ld	41, Chowringhee	ditto
1293	Stapleton, J	Measurer, Bengal Chamber of Commerce	2, Clive Street	ditto
1294	Staynor, Denis Elver	Clerk, C O P S Office, E I R	E I R House	ditto
1295	Steel, C S	Inspector of Factories, Bengal	40-1A, Free School Street	ditto
1296	Stephens, Edwin Arnold	Assistant, Ralli Brothers, Ld	16, Hare Street	ditto
1297	Stephens, H S	Assistant, Turner, Morrison & Co, Ld	6, Lyons Range	ditto
1298	Stevens, George Donald Ross	Assistant, Macneill & Co	2, Fairlie Place	ditto
1299	Stevens, Michael George	Assistant, Ralli Brothers, Ld	16, Hare Street	ditto
1300	Stevenson, G	Assistant, Jardine, Skinner & Co	4, Clive Row	ditto
1301	Stevenson, R L, B. sc (Agr)	Assistant, Imperial Chemical Industries (India) Ld	18, Strand Road	ditto
1302	Stevenson, Sidney	Assistant, James, Finlay & Co, Ld	1, Clive Street	ditto
1303	Stewart, E A	Assistant, Jessop & Co, Ld	93, Clive Street	ditto
1304	Stewart, J A	Assistant, Halley Brothers, Ld	7, Canning Street	ditto

1305	Stewart, James Mellis	Assistant, Bird & Co	1-1, Clive Street	ditto
1306	Stewart, William Harvey	Assistant, Bird & Co	1-1, Clive Street	ditto
1307	Stock, L C A	Clerk, C C M's Office, E I R	E I R House	ditto
1308	Stone, B C K	Drawing Office Supdt, Calcutta Improvement Trust	5, Clive Street	ditto
1309	Stratton, Alexander Robertson	Assistant, Bird & Co	1-1, Clive Street	ditto
1310	Stronach, L A	Director, L A Stronach & Co (India), Ld	Norton Buildings	ditto
1311	Struthers, Robert	Assistant, T E Thomson & Co, Ld	9, Esplanade, East	ditto
1312	Stubbs, A W	Salesman, Alfred Herbert (India), Ld	5, Dalhousie Square	ditto
1313	Style, H A	Assistant, Geo. Henderson & Co, Ld	101-1, Clive Street	ditto
1314	Sumption, Charles Edward	Assistant Master, The Calcutta Boys' School	72, Corporation Street	ditto
1315	Sutherland, B A	Assistant, Mackenzie Lyall & Co	5, Mission Row	ditto
1316	Swabey, Leslie J Prickett	Assistant, Burmah Shell Co of India, Ld	Hongkong House	ditto
1317	Swales, F W	Assistant, Standard Vacuum Oil Co	6, Church Lane	ditto
1318	Swann, Alec Jefferey	Clerk, Bengal Club	33, Chowringhee	ditto

No.	Name.	Style or calling.	Residence or place of business.	Religion.
1319	Swann, John Andrew Keith	Assistant, Imperial Bank of India	3, Strand Road	Christian
1320	Swaris, A V	Measurer, Bengal Chamber of Commerce	2, Clive Street	ditto
1321	Swaris, Charles	Assistant, Lipton, Ld	9, Weston Street	ditto
1322	Sweet, Robert Cecil	Assistant, Moran & Co, Ld	4, Lyons Range	ditto
1323	Sykes, P H	Assistant, Balmer, Lawrie & Co, Ld	103, Clive Street	ditto
1324	Syrett, John Earnest	Assistant, Burmah Shell Co of India, Ld	Hongkong House	ditto
	T			
1325	Taft, E	Assistant, Brooke Bond, India, Ld	2, Metcalfe Street	ditto
1326	Tallack, Hugh Mackay	Assistant, Macneill & Co	2, Fairlie Place	ditto
1327	Tanfield, F R	Assistant, Liverpool & London & Globe Insurance Co, Ld	26, Dalhousie Square	ditto
1328	Tanner, D J	Assistant, Remington Rand, Inc	3, Council House Street	ditto
1329	Tassie, C W	Assistant, James Finlay & Co, Ld	1, Clive Street	ditto
1330	Tattersall, A C	Assistant, Hall & Anderson, Ld	31, Chowringhee	ditto
1331	Tatchell, McKean Edward	Art Director, D J Keymer & Co, Ld	4, Lyons Range	ditto

1332	Taylor, C K	Technical Assistant, Robert Ingham Clark & Co, Ld	2, Clive Row	ditto
1333	Taylor, David G	Assistant, Taylor's Gramophone Saloon	15-4, Chowringhee	ditto
1334	Taylor, Frank	Assistant, Caledonian Printing Co, Ld	3, Wellesley Place	ditto
1335	Taylor, G W	Assistant, Lovelock & Lewes	4, Lyons Range	ditto
1336	Taylor, Harry Eric Fitzgerald	Assistant, Macneill & Co	2, Fairlie Place	ditto
1337	Taylor, W R	Assistant, Jute Industries, Ld	1-A, Hare Street	ditto
1338	Teasdale, Dennis George Whigham	Assistant, Bird & Co	1-1, Clive Street	ditto
1339	Tellis, Albert	Store-keeper, May & Baker (India), Ld	11, Clive Street	ditto
1340	Tellis, Vivian	Assistant, May & Baker (India), Ld	11, Clive Street	ditto
1341	Thaddeus, W A	Measurer, Bengal Chamber of Commerce	2, Clive Street	ditto
1342	Thatcher, Percy	Foreman, J B Norton & Sons, Ld	Norton Buildings	ditto
1343	Thom, C D	Assistant, George, Henderson & Co, Ld	101-1, Clive Street	ditto
1344	Thom, James	Salvage Assessor, Sinclair Murray & Co, Ld	6, Royal Exchange Place	ditto
1345	Thomas Basil Arthur	Assistant, Bird & Co	1-1, Clive Street	ditto

No.	Names	Style or calling.	Residence or place of business.	Religion.
1346	Thomas, C H	Assistant, J Thomas & Co	8, Mission Row	Christian
1347	Thomas, Clifford	Assistant, Lionel Edwards, Ld	D-1, Clive Buildings	ditto
1348	Thomas, George Arthur	Litho Machine Printer, Photo-Litho Office, Survey of India	14, Wood Street	ditto
1349	Thomas, L E	Lino Operator, Government of India Press	8, Hastings Street	ditto
1350	Thomas, M P	Assistant, Bird & Co	1-1, Clive Street	ditto
1351	Thomas, R A S	Assistant, J Thomas & Co	8, Mission Row	ditto
1352	Thomas, R Chilton	Assistant, Babcock & Wilcox, Ld	4, Bankshall Street	ditto
1353	Thomas, Robson Vivian	Sub-Accountant, Mercantile Bank of India, Ld	8, Clive Street	ditto
1354	Thomas, S	Assistant, Mackinnon, Mackenzie & Co	8, Strand Road	ditto
1355	Thompson, A W	Assistant, Mackinnon, Mackenzie & Co	8, Strand Road	ditto
1356	Thompson, E C A	Assistant, Price, Waterhouse, Peat & Co	B-4, Clive Buildings	ditto
1357	Thompson, G G C	Assistant, Burn & Co, Ld	12, Mission Row	ditto
1358	Thomson, C F	Assistant, W Haworth & Co	1, Commercial Buildings	ditto
1359	Thomson, F	Measurer, Bengal Chamber of Commerce	2, Clive Street	ditto

1360	Thompson, N	Assistant, J Thomas & Co	8, Mission Row		ditto
1361	Tiffany, W	Assistant, Kilburn & Co	4, Fairlie Place		ditto
1362	Tobias, W A	Assistant, Jessop & Co, Ld	93, Clive Street		ditto
1363	Tovey, G A C	Assistant, Birkmyre Bros	8, Clive Row		ditto
1364	Tovey, Horace	Assistant, F W Heilgers & Co	1-1, Clive Street		ditto
1365	Tredaway, G I	Assistant, J Thomas & Co	8, Mission Row		ditto
1366	Tunks, L S S	Assistant, F W Heilgers & Co	1-1, Clive Street		ditto
1367	Turner, J F A	Assistant, James Finlay & Co, Ld	1, Clive Street		ditto
1368	Tyro, F	Assistant, Balmer, Lawrie & Co, Ld	103, Clive Street		ditto
	U				
1369	Uden, H T	Assistant, Hall & Anderson, Ld	31, Chowringhee		Christian
1370	Unite, T G S	Assistant, Jardine, Skinner & Co	4, Clive Row		ditto
1371	Upshon, Norman Wray	Assistant Master, St. Thomas Schoo	58B, Free School Street		ditto
1372	Urage, Victor Cecil	Assistant, T E Thomson & Co, Ld	9, Esplanade, East		ditto

No.	Names.	Style or calling.	Residence or place of business.	Religion.
	V			
1373	Vaillant, C A	Assistant, Begg Dunlop & Co, Ld	2, Hare Street	Christian
1374	Vallis, S C	Measurer, Bengal Chamber of Commerce	2, Clive Street	ditto
1375	Vandergucht, P J	Assistant, Balmer, Lawrie & Co, Ld	103, Clive Street	ditto
1376	Vandort, E A F	Measurer, Bengal Chamber of Commerce	2, Clive Street	ditto
1377	Vandort, G	Measurer, Bengal Chamber of Commerce	2, Clive Street	ditto
1378	Vandort, J A	Measurer, Bengal Chamber of Commerce	2, Clive Street	ditto
1379	Vanspall, Percy Richard Charles	Assistant, Cox & Kings (Agents), Ld	5, Bankshall Street	ditto
1380	Vaughan, N M	Assistant, Shaw, Wallace & Co	4, Bankshall Street	ditto
1381	Veal, Owen Lester	Assistant, George Waller & Co	29, Dalhousie Square	ditto
1382	Vernede, Jack Ronald	Accountant, Duncan Brothers & Co, Ld	101, Clive Street	ditto
1383	Vernieux, D S	Superintendent of Stores, Calcutta Tramways Co, Ld	7, Church Lane	ditto
1384	Vernieux, L E	Head Office Assistant, Calcutta Tramways Co, Ld	7, Church Lane	ditto
1385	Verona, J R	Measurer, Bengal Chamber of Commerce	2, Clive Street	ditto
1386	Verona, Leo	Assistant, Duncan Brothers & Co, Ld	101, Clive Street	ditto
1387	Vessey, S J	Assistant Manager, John Dewar & Sons, Ld	12, Hare Street	ditto
1388	Vickery, G	Catering Manager, Spencer & Co, Ld	32, Chowringhee	ditto

1389	Vincent, Dennis	Salesman, Roneo, Ld	32-1, Dalhousie Square	ditto
1390	Vincent, Lazarus Andrew	Assistant, Bengal Chamber of Commerce	2, Clive Street	ditto
1391	Vincent, Reginald Josselyn	Assistant, Royal Calcutta Turf Club	11, Russell Street	ditto
1392	Vincent, V J	Head Clerk, Income-tax Office	1, Hare Street	ditto
1393	Violett, Q	Assistant, Standard Vacuum Oil Co	6, Church Lane	ditto
1394	Vlasto, Jack John	Assistant, Ralli Brothers. Ld	16, Hare Street	ditto
1395	Voller, James Dudley	Assistant, Reserve Bank of India	8, Council House Street	ditto
1396	Vyse, Theodore Alfred, BA	Assistant Master, St Thomas' School	58-B, Free School Street	ditto
1397	Vyse, John Clarence, D'Souza	Assistant Master, La Martiniere School	11, Loudon Street	ditto

W

1398	Walker, Albert William	Engineer, John Thompson (Wolverhampton), Ld	4, Fairlie Place	Christian
1399	Walker, David	Assistant, North British & Mercantile Insurance Co, Ld	101-1, Clive Street	ditto
1400	Walker, J	Permanent Way Assistant, Calcutta Tramways Co, Ld	7, Church Lane	ditto
1401	Walker, James	Engineer, W & T Avery, Ld	11, Crooked Lane	ditto
1402	Walker, J N	Assistant, Standard Vacuum Oil Co	6, Church Lane	ditto
1403	Wallace, Archibald George	Assistant, Martin & Co	12, Mission Row	ditto
1404	Wallace, Chas Ronald	Advertising Canvasser, *Statesman*, Ld	Statesman House	ditto
1405	Wallace, Kenneth Edward	Assistant, Hoare Miller & Co, Ld	5, Fairlie Place	ditto
1406	Wallace, Lawrence Russell, BSc (Lond)	Assistant Master, La Martiniere	11, Loudon Street	ditto
1407	Wallace, Malcolm Jeffrys	Assistant, Macneill & Co	2, Fairlie Place	ditto

No.	Names.	Style or calling.	Residence or place of business.	Religion.
1408	Wallace, Robert	Sub-Accountant, Mercantile Bank of India, Ld	8, Clive Street	Christian
1409	Walsh, Harold St Clair	Assistant, Macneill & Co	2, Fairlie Place	ditto
1410	Walshe, D P	Measurer, Bengal Chamber of Commerce	2, Clive Street	ditto
1411	Walters, Jack Cecil	Assistant, Army & Navy Stores, Ld	41, Chowringhee	ditto
1412	Walton, J G	Assistant, Thomas Duff & Co, Ld	3, Clive Row	ditto
1413	Ward, J A	Assistant, Andrew Yule & Co, Ld	8, Clive Row	ditto
1414	Ward, W A	Assistant, J Thomas & Co	8, Mission Row	ditto
1415	Warwick, Stanley John	Salesman, Marshall Sons & Co (India), Ld	99, Clive Street	ditto
1416	Watson, A C	Assistant, H D Cartwright & Co	8, Clive Street	ditto
1417	Watson, Arthur Patrick	Assistant, Alfred Herbert (India), Ld	13-3, Strand Road	ditto
1418	Watson, J A	Assistant, Norwich Union Fire Insurance Society, Ld	8, Old Court House Street	ditto
1419	Watson, John Winning	Assistant, Planters' Stores & Agency Co, Ld	11, Clive Street	ditto
1420	Webb, Richard Martin	Assistant, Adair, Dutt & Co, Ld	5, Dalhousie Square	ditto
1421	Webster, N V H	Assistant, Turner, Morrison & Co, Ld	6, Lyons Range	ditto
1422	Webster, R O	Assistant, Balmer, Lawrie & Co, Ld	103, Clive Street	ditto
1423	Weingartner George Anthony	Assistant, A Milton & Co, Ld	156, Dharamtala Street	ditto
1424	Weir, Cyril Sylvestre	Stenographer, Jewell Export Filter Co	10, Clive Street	ditto
1425	Weir, Eric Wilford	Assistant, T E Thomson & Co, Ld	9, Esplanade, East	ditto

1426	Weldon-Church, Alexander Bertram	Assistant, Gillanders Arbuthnot & Co	8, Clive Street	ditto
1427	Wells, C W	Measurer, Bengal Chamber of Commerce	2, Clive Street	ditto
1428	Wells, H W	Assistant, Roberts, McLean & Co, Ld	101, Clive Street	ditto
1429	West, E R	Sub-Accountant, Mercantile Bank of India, Ld	8, Clive Street	ditto
1430	Westgarth, Spencer	Assistant, Whiteaway Laidlaw & Co, Ld	7, Chowringhee	ditto
1431	Wheeler, Edwin Jones	Assistant, Army & Navy Stores, Ld	41, Chowringhee	ditto
1432	Wheeler, H N	Assistant, I G N & Ry Co, Ld	4, Fairlie Place	ditto
1433	Wheeler, William Ebeneza	Assistant, British Refrigerators	30, Chowringhee	ditto
1434	Wheeler, William I T D Courcy	Assistant, Macneill & Co	2, Fairlie Place	ditto
1435	White, A F P	Assistant, Volkart Bros	11, Clive Street	ditto
1436	White, Arthur William	Assistant, Commercial Union Assurance Co, Ld	32, Dalhousie Square	ditto
1437	White, J H	Assistant, F W Heilgers, & Co	1-1 Clive Street	ditto
1438	Whitehead, J P	Assistant, F W Heilgers & Co	1-1, Clive Street	ditto
1439	Whitehead, R B	Assistant, Turner Morrison & Co, Ld	6, Lyons Range	ditto
1440	Whitlock, Edward	Mains Jointer, C E S C, Ld	Victoria House	ditto
1441	Whitson, Harry H Adie	Acting Manager, Phipson & Co, Ld	1, Garstin Place	ditto
1442	Whittaker, R	Engineer, W & T Avery, Ld	11, Crooked Lane	ditto
1443	Whitworth, Robert John Eve	Assistant, Harrisons & Crosfield, Ld	6, Church Lane	ditto
1444	Wilks, George Charles	Assistant, Mackenzie, Lyall & Co	5, Mission Row	ditto
1445	Wilks, Patrick Sydney Arthur	Assistant, Lloyds Bank, Ld	37, Chowringhee	ditto
1446	Williams, E J	Deputy Superintendent, Telegraphs, E B R	3, Kaylaghat Street	ditto

No.	Names.	Style or calling.	Residence or place of business.	Religion.
1447	Williams, Gilbert Daniel	Assistant, Cox & Kings (Agents), Ld	5, Bankshall Street	Christian
1448	Williams, J I	Assistant, I G N & Ry Co, Ld	4, Fairlie Place	ditto
1449	Williams, L E	Assistant, Hall & Anderson, Ld	31, Chowringhee	ditto
1450	Williams, P	Assistant, Thomas Duff & Co, Ld	3, Clive Row	ditto
1451	Williamson, C J	Reader, Calcutta General Printing Co, Ld	300, Bowbazar Street	ditto
1452	Williamson, J H	Assistant, Shaw Wallace & Co	4, Bankshall Street	ditto
1453	Willard, Frederick William	Assistant, Humayan Properties, Ld	1, Humayan Place	ditto
1454	Willis, Allen Harry Clarence	Assistant, Volkart Brothers	11, Clive Street	ditto
1455	Willis, Arthur Hamilton d'Anyers	Assistant, Place, Siddons & Gough	6, Lyons Range	ditto
1456	Willis, Guy Howard	Assistant, Roberts, McLean & Co, Ld	101, Clive Street	ditto
1457	Wilson, C D	Assistant, Balmer, Lawrie & Co, Ld	103, Clive Street	ditto
1458	Wilson, Ian Birrell	Assistant, Ford, Rhodes, Thornton & Co	Tower House	ditto
1459	Wilson, T	Assistant, Lionel Edwards, Ld	D1, Clive Buildings	ditto
1460	Wilson, William Alfred	Assistant, Bird & Co	1-1, Clive Street	ditto
1461	Wilton, Geoffrey, MA (Glas)	Assistant Master, La Martiniere	11, Loudon Street	ditto
1462	Winder, Arthur Thomas	Assistant, W. T. Henley's Telegraph Works & Co, Ld	Old Court House Corner	ditto
1463	Wishart, Isaac	Assistant, Macneill & Co	2, Fairlie Place	ditto
1464	Wood, Arbuthnot	Assistant, F W Heilgers & Co	1-1, Clive Street	ditto

1465	Wood, Herbert	Engineer, Chloride Electrical Storage Co, Ld	4, Lyons Range	ditto
1466	Wood, Robert Anderson	Assistant Accountant, National Bank of India, Ld	104, Clive Street	ditto
1467	Woodward, G C	Superintendent, Sir Stuart Hogg Market	Sir Stuart Hogg Market	ditto
1468	Woodward, William Henry Clifford	Jr. Superintendent, Reserve Bank of India	8, Council House Street	ditto
1469	Wright, Anderson	Salesman, Minimax, Ld	Mercantile Buildings	ditto
1470	Wright, H W	Assistant, Lovelock & Lewes	4, Lyons Range	ditto
1471	Wright, John Wyman, MA	Assistant Master, St Thomas' School	58-B, Free School Street	ditto

Y

1472	Yapp, G F	Assistant, Mackinnon, Mackenzie & Co	8, Strand Road	Christian
1473	Yeoman, A S B	Assistant, Turner Morrison & Co, Ld	6, Lyons Range	ditto
1474	Young, George	Assistant, Paterson Engineering Co (India), Ld	2, Dalhousie Square	ditto
1475	Young, G S	Assistant, Standard Life Assurance Co	32, Dalhousie Square	ditto
1476	Young, P R	Assistant Superintendent, W & W Department, E I R	E I R House	ditto
1477	Young, Reginald Lancelot	Assistant, Thos, Cook & Son, Ld	4, Dalhousie Square	ditto
1478	Young, S	Assistant, Ocean Accident & Guarantee Corporation, Ld	32-1, Dalhousie Square, South	ditto
1479	Young, T B D	Assistant, Geo Henderson & Co, Ld	101-1, Clive Street	ditto

Z

1480	Zachariah, P G, MA	Assistant, Commercial Intelligence Department	1, Council House Street	Christian
1481	Zorab, Arthur John Kars	Assistant, Burmah Shell Co of India, Ld	Hongkong House	Armenian
1482	Zurita, Trevelyn Hayward	Measurer, Bengal Chamber of Commerce	2, Clive Street	Christian

No.	Names.	Style or calling.	Residence or place of business.	Religion.
	A			
1483	Abu, Osman Khalil	Lecturer, Calcutta University	Senate House	Mahomedan
1484	Acharya, Debendra Nath	Assistant, Macneill & Co	2, Fairlie Place	Hindu
1485	Acharya, G C., GDA	Assistant, S R Battliboi & Co	1-B, Old Post Office Street	ditto
1486	Acharya, Mahim Chandra	Clerk, D A-G, P & T Office	7, Koilaghat Street	ditto
1487	Acharya, Mani Mohan	Overseer, Executive Engineer's Office, City Division, P W D	Writers' Buildings	ditto
1488	Acharya, Manindra Nath, MSc	Laboratory Assistant, Zoological Survey of India	Indian Museum	ditto
1489	Acharya, Nishi Kumar, BSc (Hons).	Clerk, D A-G, P & T Office	7, Koilaghat Srteet	ditto
1490	Acharya, Ramrenu, MA, BT	Assistant Master, Hindu School	College Square	ditto
1491	Acharya, Satish Chandra	Assistant, A-G's Office, Bengal	Treasury Buildings	ditto
1492	Acharya, Surendra Nath	Assistant, Office of the Inspector-General of Police, Bengal	Writers' Buildings	ditto
1493	Adhikari, Krishna Chandra, BL	Accountant, Dy Accountant-General, Posts and Telegraphs Office	7, Koilaghat Street	ditto
1494	Adhikari, Mohini Mohan	Clerk, Traffic Department, E B R	3, Koilaghat Street	ditto
1495	Adhikari, Sanat Kumar	Clerk, D A-G, P & T Office	7, Koilaghat Street	ditto
1496	Adhya, Akhoy Kumar	Clerk, Martin & Co	12, Mission Row	ditto
1497	Adhya, Chandra Shekhar	Assistant, Burn & Co, Ld	12, Mission Row	ditto
1498	Adhya, Gopinath	Cashier, Harrisons & Crosfield, Ld	6, Church Lane	ditto

1499	Adhya, Ishan Chandra ..	Clerk, Burmah Shell Co of India, Ld	Hongkong House	ditto
1500	Adhya, Jatindra Nath ..	Assistant, Commercial Intelligence Department	1, Council House Street	ditto
1501	Adhya, Jugal Kishore	Cashier, Geo Henderson & Co, Ld	101-1, Clive Street	ditto
1502	Adhya, K C, MA	Director, Incorporated Insurance, Ld	33-1, Amherst Street	Christian
1503	Adhya, Nagendra Nath	Assistant, Commercial Intelligence Department	1, Council House Street	Hindu
1504	Adhya, Patitpaban	Assistant, Andrew Yule & Co, Ld	8, Clive Row	ditto
1505	Adhya, Pramatha Nath	Clerk, Imperial Bank of India	3, Strand Road	ditto
1506	Adhya, Shyam Sundar	Assistant, P & O Banking Corporation, Ld	1, Fairlie Place	ditto
1507	Aditya, Surendra Nath	Salesman, Indian School Supply Depot	Chittaranjan Avenue, South	ditto
1508	Ahmed, Aftabuddin (Maulvi)	Estimator, Hijli Division	Writers' Buildings	Mahomedan
1509	Ahmed, Ahiduddin, MA	Inspector Surveyor, I T Office	3, Government Place, West	ditto
1510	Ahmed, Anwaruddin (Maulvi)	Assistant, Bengal Secretariat, Police Department	Writers' Buildings	ditto
1511	Ahmed, Asimuddin	Assistant, Office of the Director of Public Instruction, Bengal	Writers' Buildings	ditto
1512	Ahmed, Basiruddin, BL	Assistant, A G's Office, Bengal	Treasury Buildings	ditto
1513	Ahmed Fariduddin	Assistant, Reserve Bank of India	8, Council House Street	ditto
1514	Ahmed, Fariuddin	Assistant, Bengal Secretariat, P W D	Writers' Buildings	ditto
1515	Ahmed, Golam, BA	Assessor, I T Office	3, Government Place, West	ditto
1516	Ahmed, Golam	Assistant, Office of the Director of Public Instruction, Bengal	Writers' Buildings	ditto
1517	Ahmed, Golam Mahiuddin	Clerk, Collector's Department, Calcutta Corporation	Municipal Office	ditto
1518	Ahmed, Helaluddin (Maulvi)	Head Assistant, Office of the Registrar of Co-operative Societies, Bengal	Writers' Buildings	ditto

No.	Names.	Style or calling.	Residence or place of business.	Religion.
1519	Ahmed, Helaluddin	Assistant, Finance Department, Bengal Secretariat ..	Writers' Buildings	Mahomedan
1520	Ahmed, Khademuddin ..	Hd Clerk, Canals Division, P W D	Treasury Buildings	ditto
1521	Ahmed, Mahiuddin	Examiner of Accounts, I T Office	6, Esplanade, East	ditto
1522	Ahmed, Mumtazuddin ..	Assistant Maulvi, Calcutta Madrasah	19, Wellesley Square	ditto
1523	Ahmed, Muzaffar	Assistant, Office of the Inspector-General of Registration, Bengal	Writers' Buildings	ditto
1524	Ahmed, Nazir, MA	Lecturer, Islamia College	8, Wellesley Street	ditto
1525	Ahmed, Naziruddin	Clerk, Telegraph Check Office	33, Dalhousie Square South ..	ditto
1526	Ahmed, Qurban	Lighting Supervisor, Calcutta Corporation	Municipal Office	ditto
1527	Ahmed, Rafiuddin (Maulvi), BA ..	Assistant, Bengali Translator's Office	Writers' Buildings	ditto
1528	Ahmed, Rukunuddin (Maulvi), BA	Assistant, Bengal Secretariat Record Room	Writers' Buildings	ditto
1529	Ahmed, Sabiluddin ..	Clerk, Telegraph Check Office	33, Dalhousie Square, South ..	ditto
1530	Ahmed, Shah Moinuddin ..	Maulvi, Royal Asiatic Society of Bengal	1, Park Street	ditto
1531	Ahmed, Shamsheruddin ..	Clerk, Photo-Litho office, Survey of India	14, Wood Street	ditto
1532	Ahmed, Sharafuddin, MA (Maulvi)	Lecturer, Islamia College	8, Wellesley Street	ditto
1533	Ahmed, Syed Morsheduddin (Maulvi), BA	Assistant, Bengal Secretariat, Appointment Department ..	Writers' Buildings	ditto
1534	Ahmed, Syed Nehal	Surveyor, Calcutta Improvement Trust	5, Clive Street	ditto
1535	Ahmed, Syed Wasi	Clerk, Engineer's Office, E B R	3, Koilaghat Street	ditto
1536	Ahmed, Syed Zahiruddin (Maulvi)	Sub-Inspector of Schools, Calcutta (Special)	40-1A, Free School Street	ditto

1537	Ahmed, Tamizuddin	Assistant, Office of the Director of Public Instruction, Bengal	Writers' Buildings	ditto
1538	Ahmed, Zainuddin	Clerk, Telegraph Check Office	33, Dalhousie Square, South	ditto
1539	Aich, Pankajkumar	Assistant, Controller's Office, Calcutta University	Senate House	Hindu
1540	Aiyar, A R Subbaranan	S A S Clerk, Army Factory Accounts	6, Esplanade, East	ditto
1541	Aiyar, K R K	Clerk, Shaw, Wallace & Co	4, Bankshall Street	ditto
1542	Aiyar, T Krishnaswamy	Stenographer, Bengal Secretariat, Finance Department	Writers' Buildings	ditto
1543	Aiyar, V Rangaswami	Head Clerk, Agent's Office, E B R	3, Kaylaghat Street	ditto
1544	Akbar, Md Ali, BA	Assistant, Accountant-General's Office, Bengal	Treasury Buildings	Mahomedan
1545	Alam, Abu Zafer Md	Inspector, License Department, Calcutta Corporation	Municipal Office	ditto
1546	Alam, Mohammad Najmul, BA	Assistant, Central Stationery Office	3, Church Lane	ditto
1547	Alam, Syed Md Badrul, BA	Lecturer, Ripon College	24, Harrison Road	ditto
1548	Ali, A B M Magfur (Maulvi), BA	Assistant, Bengal Secretariat, Special Branch	Writers' Buildings	ditto
1549	Ali, Akhtar (Syed)	Assistant Librarian, Presidency College	86-1, College Street	ditto
1550	Ali, Anser (Maulvi), BA	Assistant, Bengal Secretariat, Appointment Department	Writers' Buildings	ditto
1551	Ali, Asad Mahomed	Superintendent, C O P S Office	E I R House	ditto
1552	Ali, Azam	Assistant, Commercial Intelligence Department	1, Council House Street	ditto
1553	Ali, Azim	Clerk, C M E's Office, E I R	E I R House	ditto
1554	Ali, Kazi Azahar, BL	Assistant, Legislative Department, Bengal	Council House	ditto
1555	Ali, Ghanimat (Maulvi), BSC	Laboratory Assistant, Islamia College	8, Wellesley Street	ditto
1556	Ali, Gholam, BA	Assistant, Bengal Secretariat, Finance Department	Writers' Buildings	ditto

No.	Names.	Style or calling.	Residence or place of business.	Religion.
1557	Ali, Hafez, BA	Assistant, Bengal Secretariat, Finance Department	Writers' Buildings	Mahomedan
1558	Ali, Jabed	Assistant Record-Keeper, Calcutta Corporation	Municipal Office	ditto
1559	Ali, Mahabat	Stenographer, Bengal Secretariat, Finance Department	Writers' Buildings	ditto
1560	Ali, Mahomed, MA	Lecturer, Ripon College	24, Harrison Road	ditto
1561	Ali, Mahomed	Clerk, C M O's Office, E I R	E I R House	ditto
1562	Ali, Mahomed Arab, MA	Assistant, Education Department, Bengal Secretariat	Writers' Buildings	ditto
1563	Ali, Mahomed Korban (Maulvi)	Assistant, Bengal Secretariat, L S-G Department	Writers' Buildings	ditto
1564	Ali, Mahomed Moksed	Assistant Master, Hare School	87, College Street	ditto
1565	Ali, Makbul, BA	Assistant, Accounts Department, Calcutta Corporation	Municipal Office	ditto
1566	Ali, Md Najib	Accountant, "Star of India"	3, Wellesley Place	ditto
1567	Ali, Md Sadat, BA	Clerk, D A G P & T Office	7, Koilaghat Street	ditto
1568	Ali, Md Yakub, BA	Clerk, Telegraph Check Office	33, Dalhousie Square, South	ditto
1569	Ali, M Torab, MA	Assistant, Accountant-General's Office, Bengal	Treasury Buildings	ditto
1570	Ali, Mukshed (Maulvi)	Assistant, Bengal Secretariat, Appointment Department	Writers' Buildings	ditto
1571	Ali, S Sikandar	Chief Accountant, Associated British Machine Tool Makers, Ld	6, Old Post Office Street	ditto
1572	Ali, Syed Hashim	Assistant, Bengal Secretariat, Revenue Department	Writers' Buildings	ditto
1573	Ali, Syed Sadat	Assessor, Income-tax Office	3, Government Place, West	ditto
1574	Ali, Syed Wahed	Assistant, Bengal Secretariat, Revenue Department	Writers' Buildings	ditto
1575	Amanatullah (Maulvi), BA	Assistant, Bengal Secretariat, Political (Jails) Department	Writers' Buildings	ditto

1576	Ambani, Panachand Kapurchand	Supervisor, Jeewanlal (1929), Ld	101, Clive Street	Hindu
1577	Amin, Muhammad Bin, BA	Personal Clerk to Deputy Ex Officer, Calcutta Corporation	Municipal Office	Mahomedan
1578	Anam, Md Sharful, BA	Record Keeper, Calcutta Corporation	Municipal Office	ditto
1579	Anand, C G, BA	Assistant, L S Daver & Co	1 & 2, Old Court House Corner	Hindu
1580	Ansari, Maqbool Ahmed, BA	Apprentice, Eastern Federal Union Insurance Co, Ld	9, Clive Street	Mahomedan
1581	Antia, Eduljee Rattanjee	Assistant, Burmah Shell Co of India, Ld	Hongkong House	Zoroastrian
1582	Antia, Jehangir Sorabji	Salesman, Muller & Phipps (India), Ld	Avenue House, Chowringhee Square	ditto
1583	Arnab, Satish Chandra	Assistant , P & O Banking Corporation, Ld	1, Fairlie Place	Hindu
1584	Arora, Dina Nath	Auditor, Karam Chand Thapar & Bros, Ld	5, Royal Exchange Place	ditto
1585	Arunachalam, T S, BA	Assistant, Commercial Intelligence Department, India	1, Council House Street	ditto
1586	Asgar, Mahomed	Assistant Master, Calcutta Madrasah	19, Wellesley Square	Mahomedan
1587	Ashan, Raghib	Sub-Editor, Star of India	3, Wellesley Place	ditto
1588	Asthana, Srikrishna	Clerk, C A O's Office, E I R	E I R House	Hindu
1589	Ayengar, Srinivas	Assistant, Jeewanlal (1929), Ld	101, Clive Street	ditto
1590	Ayrton, S M	Assistant, Shaw Wallace & Co	4, Bankshall Street	Zoroastrian
1591	Aziz, Md Abdul, BA	Assistant, Accountant-General's Office, Bengal	Treasury Buildings	Mahomedan
1592	Azizuddin, Mahammad	Head Clerk, Calcutta Madrasah	19, Wellesley Square	ditto

B

1593	Badiuzzaman, Sk (Maulvi)	Travelling Auditor, Office of the Inspector-General of Prisons, Bengal.	Writers' Buildings	Mahomedan

No.	Names.	Style or calling.	Residence or place of business.	Religion.
1594	Badiuzzaman, Maulvi, MSC	Assistant Analyst, Bengal Public Health Laboratory	Chittaranjan Avenue	Mahomedan
1595	Bagchi, Ashutos	Assistant, Controller's Office, Calcutta University	Senate House	Hindu
1596	Bagchi, Bibhuti Bhusan	Clerk, Shaw, Wallace & Co	4, Bankshall Street	ditto
1597	Bagchi, Girija Shankar	S A Superintendent, No. I Drawing Office, Survey of India	13, Wood Street	ditto
1598	Bagchi, Pravas Chandra	Chief Clerk, Bill Section, C E S C, Ld	Victoria House	ditto
1599	Bagchi, Rabindra Nath	Clerk, Telegraph Check Office	33, Dalhousie Square, South	ditto
1600	Bagchi, Shailendra Nath	Clerk, D A G P & T Office	7, Koilaghat Street	ditto
1601	Bagchi, Shib Nath, BSC	Stenographer, Bengal Secretariat, Finance Department	Writers' Buildings	ditto
1602	Bagchi, Sushil Kumar	Clerk, D A G P & T Office	7, Koilaghat Street	ditto
1603	Bahadur, Shamsher	Sub-Head, C A O's Office, E I R	E I R House	ditto
1604	Baksh, Nabi	Clerk, C O P S Office, E I R	E I R House	Mahomedan
1605	Bakshi, Abhaya Pada	Clerk, Shaw, Wallace & Co	4, Bankshall Street	Hindu
1606	Bakshi, Dakshinaranjan	Clerk, Operating Department, E I R	E I R House	ditto
1607	Bakshi, Lal Mohan	Clerk, Telegraph Check Office	33, Dalhousie Square, South	ditto
1608	Bakshi, Purna Chandra	Stenographer, Standard Literature Co, Ld	13-1, Old Court House Street	ditto
1609	Bakshi, Santos Chandra	Clerk, C A O's Office, E I R	E I R House	ditto
1610	Bakshi, Saroj Kumar	Assistant, North British & Mercantile Insurance Co, Ld	101-1, Clive Street	ditto
1611	Bakshi, Satish Chandra	Clerk, Agent's Office, E I R	E I R House	ditto

1612	Bala Krishnam, P V	Clerk, Remington Rand Inc	3, Council House Street	ditto
1613	Balial, Radhikaprasad	Clerk, Agent's Office, E I R	E I R House	ditto
1614	Banarji, A, BA	Assistant, Art Press	20, British Indian Street	ditto
1615	Banarji, A K	Salesman, Dunlop Rubber Co (India), Ld	42, Free School Street	ditto
1616	Banarji, A K	Assistant Engineer, G E C (India), Ld	Magnet House, Chittaranjan Avenue, South.	ditto
1617	Banarji, Akshaya Kumar	Assistant, Office of the Commissioner of Income-tax	Imperial Secretariat Buildings	ditto
1618	Banarji, Amarendra Nath	Clerk, D A G P & T Office	7, Koilaghat Street	ditto
1619	Banarji, Amarendra Nath, MA	Assistant, A G's Office, Bengal	Treasury Buildings	ditto
1620	Banarji, Amarnath	Head Assistant, Standard Literature Co, Ld	13-1, Old Court House Street	ditto
1621	Banarji, Amarnath	Clerk, C O P S Office, E I R	E I R House	ditto
1622	Banarji, Amrita Lal	Clerk, Acctts Deptt, Imperial Bank of India	Strand Road	ditto
1623	Banarji, Amrita Lal	Assistant, Macneill & Co	2, Fairlie Place	ditto
1624	Banarji, Amrita Lal	Assistant, Bengal Chemical & Pharmaceutical Works, Ld	31, Chittaranjan Avenue, South	ditto
1625	Banarji, Amulya Mohan	Clerk, D A G P & T Office	7, Koilaghat Street	ditto
1626	Banarji, Anadi Nath	Clerk, Gillanders, Arbuthnot & Co	8, Clive Street	ditto
1627	Banarji, Ananta Deb	Assistant, Accountant-General's Office, Bengal	Treasury Buildings	ditto
1628	Banarji, Anil Chandra, BA	Assistant, Accountant-General's Office, Bengal	Treasury Buildings	ditto
1629	Banarji, Anil Krishna	L G S Officer, E I R	E I R House	ditto
1630	Banarji, Anil Kumar	Clerk, Imperial Bank of India	3, Strand Road	ditto

No.	Names.	Style or calling.	Residence or place of business.	Religion.
1631	Banarji, Anil Kumar	Assistant, Kodak, Ld	17, Park Street	Hindu
1632	Banarji, Apurba K, BA	Clerk, D A G P & T Office	7, Koilaghat Street	ditto
1633	Banarji, Arun Chandra	Clerk, Harrisons & Crosfield, Ld	6, Church Lane	ditto
1634	Banarji, Arun Chandra	Superintendent, C R E's Office, Elec & Mech, P and A District.	Fort William	ditto
1635	Banarji, Ashutos, BA	Head Clerk, Botanical Survey of India	Indian Museum	ditto
1636	Banarji, Ashutos	Clerk, Mackinnon Mackenzie & Co	16, Strand Road	ditto
1637	Banarji, Asita Mohan	Assistant, Calcutta University	Senate House	ditto
1638	Banarji, Atul Chandra	Assistant, Senda & Co (India), Ld	135, Canning Street	ditto
1639	Banarji, Bacharam	Clerk, I G N & Ry Co, Ld	Nimtollah	ditto
1640	Banarji, Bagalapada, BA	Assistant, Accountant-General's Office, Bengal	Treasury Buildings	ditto
1641	Banarji, Baidya Nath	Clerk, D A G P & T Office	7, Koilaghat Street	ditto
1642	Banarji, Banku Bihari	Clerk, Central Registry, E I R	E I R House	ditto
1643	Banarji, Balaidas	Assistant, Accounts Department, Calcutta Corporation	Municipal Office	ditto
1644	Banarji, Basanta Kumar	Assistant, Controller's Office, Calcutta University	Senate House	ditto
1645	Banarji, Basanta Kumar	Assistant, Reserve Bank of India	8, Council House Street	ditto
1646	Banarji, Basanta Kumar	Clerk, C O P S Office, E I R	E I R House	ditto
1647	Banarji, Basanta Lal	Assistant, Burn & Co, Ld	12, Mission Row	ditto
1648	Banarji, B B	Assistant, All India Radio	1, Garstin Place	ditto

1649	Banarji Benoy Krishna, BSc	Clerk, D A G P & T Office	7, Koilaghat Street	ditto
1650	Banarji, Bepin Behary	Clerk, Shaw Wallace & Co	4, Bankshall Street	ditto
1651	Banarji, Bholadas, BA	Assessment Clerk, Assessor's Department, Calcutta Corporation	Municipal Office	ditto
1652	Banarji, Bholanath	Clerk, C O P S Office, E I R	E I R House	ditto
1653	Banarji, Bholanath	Clerk, Telegraph Check Office	33, Dalhousie Square, South	ditto
1654	Banarji, Bhuban Mohan	Cashier, Explosives Office	1, Council House Street	ditto
1655	Banarji, Bhudeb Ch	Head Clerk, Stores Department, E B R	3, Koilaghat Street	ditto
1656	Banarji, Bhujanga Bhusan, BA	Technical Assistant, All India Radio	1, Garstin Place	ditto
1657	Banarji, Bhupati	Assistant, Controller of Stores Department, Calcutta Corporation	30-1, Beadon Row	ditto
1658	Banarji, Bhupati Nath	Assistant, Accountant-General's Office, Bengal	Treasury Buildings	ditto
1659	Banarji, Bhupati Nath	Assistant, Macneill & Co	2, Fairlie Place	ditto
1660	Banarji, Bhupendra Lal	Assistant, Calcutta University	Senate House	ditto
1661	Banarji, Bhupendra Nath	2nd clerk, Presidency College	86-1, College Street	ditto
1662	Banarji, Bibhuti Bhusan	Clerk, E B R	3, Koilaghat Street	ditto
1663	Banarji, Bibhuti Bhusan, BA	S A S Clerk, Army Factory Accounts	6, Esplanade, East	ditto
1664	Banarji, Bibhuti Bhusan	Clerk, Post-Audit, Port Commissioners' Office	Strand Road	ditto
1665	Banarji, Bibhuti Bhusan	Reader, Government of India Press	8, Hastings Street	ditto
1666	Banarji, Bidyut Kumar, BA	Inspector Surveyor, Income-tax Office	3, Government Place, West	ditto

No	Names.	Style or calling	Residence or place of business.	Religion.
1667	Banarji, Bijaya Bhusan, BA	Clerk, D A G P & T Office	7, Koilaghat Street	Hindu
1668	Banarji, Bijaya Gopal	Assistant, Andrew Yule & Co, Ld	8, Clive Row	ditto
1669	Banarji, Bijaya K	Assistant, Andrew Yule & Co, Ld	8, Clive Row	ditto
1670	Banarji, Bijaya K	Assistant, Balmer, Lawrie & Co, Ld	103, Clive Street	ditto
1671	Banarji, Bijaya Krishna	Clerk, Burmah Shell Co of India, Ld	Hongkong House	ditto
1672	Banarji, Bijaya Kumar	Estimator, P H D, Bengal	3, Charnock Place	ditto
1673	Banarji, Bijaya Kumar	2nd Assistant, Supdtg Engineer's Office, Electrical Circle, Bengal	Writers' Buildings	ditto
1674	Banarji, Bijaya Kumar, MA	Accountant, Government of India Press	8, Hastings Street	ditto
1675	Banarji, Bimala Charan, BA	Clerk, Chief Auditor's Office, E I R	E I R House	ditto
1676	Banarji, Bipra Das, BA	Clerk, D A G P & T Office	7, Koilaghat Street	ditto
1677	Banarji, Birendra Mohan, BCom	Clerk, D A G P & T Office	7, Koilaghat Street	ditto
1678	Banarji, Biswanath, MSc	Assistant Librarian, Calcutta University	Senate House	ditto
1679	Banarji, B K	Clerk, Heatly & Gresham, Ld	6, Waterloo Street	ditto
1680	Banarji, B K	Accountant, Henry Maddeson, Ld	Mercantile Buildings	ditto
1681	Banarji, Bon Behari	Clerk, Chief Auditor's Office, E I R	E I R House	ditto
1682	Banarji, Brajendra Nath	Assistant, Accounts Dept, Calcutta Corporation	Municipal Office	ditto
1683	Banarji, Chandi Charan	Assistant, Reserve Bank of India	8, Council House Street	ditto
1684	Banarji, Chandi Charan	Assistant, James Finlay & Co, Ld	1, Clive Street	ditto
1685	Banarji, Chandra Bhusan	Clerk, Martin & Co	12, Mission Row	ditto

1686	Banarji, Charu Chandra ..	Head Computor, Government of India Press ..	8, Hastings Street ..	ditto
1687	Banarji, Dasarathi ..	Accounts Clerk, Calcutta Improvement Trust ..	5, Clive Street ..	ditto
1688	Banarji, Debanga Nath ..	Assistant, Accountant-General's Office, Bengal ..	Treasury Buildings ..	ditto
1689	Banarji, Debendra Nath ..	Assistant, Office of the Inspector-General of Police, Bengal	Writers' Buildings ..	ditto
1690	Banarji, Debendra Nath	Head Clerk, Traffic Department, E B R ..	3, Kaylaghat Street ..	ditto
1691	Banarj, Deb Sankar ..	Assistant, Reserve Bank of India	8, Council House Street ..	ditto
1692	Banarji, Debgati ..	Assistant, Income-tax Office	6, Esplanade, East ..	ditto
1693	Banarji Dhanendra Nath	Assistant, Reserve Bank of India	8, Council House Street ..	ditto
1694	Banarji, Dhirendra Kumar, BA	Stenographer, C E's Office, Calcutta Corporation ..	Municipal Office ..	ditto
1695	Banarji, Dhirendra Nath	Clerk, *Statesman*, Ld	Statesman House ..	ditto
1696	Banarji, Dhirendra Nath	Assistant, Accountant-General's Office, Bengal ..	Treasury Buildings ..	ditto
1697	Banarji, Dhirendra Nath, BSc	Sub-Inspector, License Department, Calcutta Corporation	Municipal Office ..	ditto
1698	Banarji, Dhirendra Nath	Assistant, Bird & Co	1-1, Clive Street ..	ditto
1699	Banarji, Dulal Chandra ..	Assistant, Calcutta Collectorate	3, Charnock Place ..	ditto
1700	Banarji, Durgadas ..	Clerk, Secretary's Department, Port Commissioners' Office	Strand Road ..	ditto
1701	Banarji, Durga Prasad ..	Assistant, Accountant-General's Office, Bengal ..	Treasury Buildings ..	ditto
1702	Banarji, Dwijendra Nath, BA	Assistant, Board of Revenue, Bengal	Writers' Buildings ..	ditto
1703	Banarji, Ekkari ..	Clerk, Collector's Department, Calcutta Corporation	Municipal Office ..	ditto
1704	Banarji, Fani Bhusan ..	Stenographer, Burmah Shell Co of India, Ld ..	Hongkong House ..	ditto
1705	Banarji, Fanibhusan ..	Assistant, J Thomas & Co	8, Mission Row ..	ditto
1706	Banarji, Gangananda ..	Assistant, Accountant-General's Office, Bengal ..	Treasury Buildings ..	ditto

No.	Names.	Style or calling.	Residence or place of business.	Religion.
1707	Banarji, Girija Bhusan	Head Clerk, Saturday Club	7, Wood Street	Hindu
1708	Banarji, Girija Nath	Reader, Government of India Press	8, Hastings Street	ditto
1709	Banarji, Girindra Nath	Assistant, Public Health Department, Bengal	Writers' Buildings	ditto
1710	Banarji, Girindra Nath	Assistant, Army & Navy Stores, Ld	41, Chowringhee	ditto
1711	Banarji, Girindra Nath	Assistant, Planters' Stores & Agency Co, Ld	11, Clive Street	ditto
1712	Banarji, Gobin Chandra	Head Clerk, Accident Department, New Zealand Insurance Co, Ld	26, Dalhousie Square	ditto
1713	Banarji, Gobinda Chandra	Cashier, Octavius Steel & Co, Ld	14, Old Court House Street	ditto
1714	Banarji, Gobinda Lal, BSc	Assistant, Accountant-General's Office, Bengal	Treasury Buildings	ditto
1715	Banarji, Gopal Chandra	Overseer, P H D, Bengal	3, Charnock Place	ditto
1716	Banarji, Gopal Chandra	Assistant, Bengal Secretariat, Finance Department	Writers' Buildings	ditto
1717	Banarji, Gopi Krishna	Clerk, Telegraph Check Office	33, Dalhousie Square, South	ditto
1718	Banarji, Gorachand, BE, CE	Assistant, Holmes Wilson & Co, Ld	Norton Buildings	ditto
1719	Banarji, Gurudas, MA	Superintendent, Reserve Bank of India	8, Council House Street	ditto
1720	Banarji, Gurupada	Assistant, Mackinnon, Mackenzie & Co	16, Strand Road	ditto
1721	Banarji, Haran Chandra	Stenographer, C E E's Office, E I R	E I R House	ditto
1722	Banarji, Harashit Chandra, BA	Sales Manager, Bengal Luxmi Soap Works	28, Pollock Street	ditto
1723	Banarji, Harendra Nath, BA	Head Assistant (Establishment), Calcutta Corporation	Municipal Office	ditto
1724	Banarji, Harendra Nath, BA	Assistant, Accountant-General's Office, Bengal	Treasury Buildings	ditto
1725	Banarji, Harendra Nath	Clerk, Office of the Chief Mining Engineer, Railway Board	1, Council House Street	ditto

1726	Banarji, Harendra Nath	Assistant, Central Forms Stores	166, Dharamtala Street	ditto
1727	Banarji, Hari Bhusan	Assistant, Surgeon-General's Office, Bengal	Writers' Buildings	ditto
1728	Banarji, Hari Charan	Assistant, Octavius Steel & Co, Ld	14, Old Court House Street	ditto
1729	Banarji, Haridas	Clerk, Central Stationery Store	3, Church Lane	ditto
1730	Banarji, Haridas	Clerk, Post Audit, Port Commissioners' Office	Strand Road	ditto
1731	Banarji, Haridas	Assistant, Bengal Chamber of Commerce	2, Clive Street	ditto
1732	Banarji, Haridhan	Clerk, Brooke Bond (India), Ld	2, Metcalfe Street	ditto
1733	Banarji, Hari Gopal	Assistant, Andrew Yule & Co, Ld	8, Clive Row	ditto
1734	Banarji, Harihar	Clerk, Shaw, Wallace & Co	4, Bankshall Street	ditto
1735	Banarji, Harihar	Clerk, Burmah Shell Co of India, Ld	Hongkong House	ditto
1736	Banarji, Harikumar, MA	Assistant, Bengal Secretariat Record Room	Writers' Buildings	ditto
1737	Banarji, Harimaya	Assistant Record-keeper, Improvement Trust Tribunal	6, Hastings Street	ditto
1738	Banarji, Harimohan, MA	Audit Clerk, E B R	3 Kaylaghat Street	ditto
1739	Banarji, Harimohan	Assistant, Royal Calcutta Turf Club	11, Russell Street	ditto
1740	Banarji, Hari Nath	Accountant, Talbot & Co	Tower House	ditto
1741	Banarji, Haripada	Clerk, W & W Department, E I R	E I R House	ditto
1742	Banarji, Hari Pada	Wages Clerk, Bengal Telephone Corporation, Ld	8, Hare Street	ditto
1743	Banarji, Haripada	Assistant, Bengal Chamber of Commerce	2, Clive Street	ditto
1744	Banarji, Haripada	Head Clerk, Stores Department, E B R	3, Koilaghat Street	ditto

No.	Names.	Style or calling.	Residence or place of business.	Religion.
1745	Banarji, Hariprakas	Clerk, D A G P & T Office	7, Koilaghat Street	Hindu
1746	Banarji, Hari Sadhan	Record-keeper, Improvement Trust Tribunal	6, Hastings Street	ditto
1747	Banarji, Hari Saran	Head Clerk, Traffic Department, E B R	3, Koilaghat Street	ditto
1748	Banarji, Jadupati, MA, BT	Assistant Master, Sanskrit Collegiate School	College Square	ditto
1749	Banarji, Janaki Nath, MA	Assistant, Calcutta University	Senate House	ditto
1750	Banarji, Jatindra Mohan	Assistant Master, Hare School	87, College Street	ditto
1751	Banarji, Jatindra Mohan, BA	Assistant, Office of the Controller of Currency	Treasury Buildings	ditto
1752	Banarji, Jatindra Nath	Clerk, Shaw, Wallace & Co	4, Bankshall Street	ditto
1753	Banarji, Jatish Chandra	Clerk, Calcutta Improvement Trust	5, Clive Street	ditto
1754	Banarji, Jiban Krishna	Head Assistant, Factory Inspection Department	40-1A, Free School Street	ditto
1755	Banarji, Jiten Kumar	Stenographer, Harrisons & Crosfield, Ld	6, Church Lane	ditto
1756	Banarji, Jitendra Nath BA	Food Inspector, Calcutta Corporation	22, Mirzapore Street	ditto
1757	Banarji, Jitendra Nath	Draftsman, No. I Drawing office, Survey of India	13, Wood Street	ditto
1758	Banarji, Jitendra Nath	Overseer, Western Electrical Division	Writers' Buildings	ditto
1759	Banarji, Jitendra Nath	Assistant, Accountant-General's Office, Bengal	Treasury Buildings	ditto
1760	Banarji, Jitendra Nath	Assistant, Andrew Yule & Co, Ld	8, Clive Row	ditto
1761	Banarji, Jitendra Nath	Clerk, D A G P & T Office	7, Koilaghat Street	ditto
1762	Banarji, J N, BL	Clerk, C A O's Office, E I R	E I R House	ditto
1763	Banarji, J N	Assistant, B rn & Co, Ld	12, Mission Row	ditto

1764	Banarji, Jnanendra Nath	Divisional Accountant, A-G's Office, Bengal	Treasury Buildings	ditto
1765	Banarji, Jnanendra Nath, BA	Assistant, Central Stationery Office	3, Church Lane	ditto
1766	Banarji, Jnanendra Nath	Jr. Superintendent, Reserve Bank of India	8, Council House Street	ditto
1767	Banarji, Jogendra Nath, BSc	Asstt Analyst, Bengal Public Health Laboratory	Chittaranjan Avenue	ditto
1768	Banarji, Jogendra Nath	Offg Manager, Walworth International Co	14-2, Clive Row	ditto
1769	Banarji, Jogesh Chandra, BA	Assistant, Commercial Intelligence Deptt, India	1, Council House Street	ditto
1770	Banarji, Jogesh Chandra	Clerk, Ralli Bros, Ld	16, Hare Street	ditto
1771	Banarji, Jogeshwar	Clerk, Alliance Assurance Co, Ld	2, Hare Street	ditto
1772	Banarji, Juran Chandra	Assistant, Central Stationery Office	3, Church Lane	ditto
1773	Banarji, Jyotish Chandra	Clerk, Imperial Bank of India	3, Strand Road	ditto
1774	Banarji, Jyotish Chandra	Assistant, European Association	6, Royal Exchange Place	ditto
1775	Banarji, Kala Sashi	Assistant, Balmer Lawrie & Co, Ld	103, Clive Street	ditto
1776	Banarji, Kali Charan	Clerk, C A O's Office, E I R	E I R House	ditto
1777	Banarji, Kalidas	Clerk, Secretary's Department, Port Commissioners' Office	Strand Road	ditto
1778	Banarji, Kalidas	Food Inspector, Calcutta Corporation	22, Mirzapore Street	ditto
1779	Banarji, Kaliprasad, BA	Assistant, Accountant-General's Office, Bengal	Treasury Buildings	ditto
1780	Banarji, Kamal Kr	Clerk, D A G P & T Office	7, Koilaghat Street	ditto
1781	Banarji, Kanai Lall	Clerk, Calcutta Tramways Co, Ld	7, Church Lane	ditto
1782	Banarji, Kanakendra Narayan, MSc	Examiner of Accounts, I T Office	3, Government Place, West	ditto
1783	Banarji, Kanti Gopal	Demonstrator, Presidency College	86-1, College Street	ditto

No.	Names.	Style or calling.	Residence or place of business.	Religion.
1784	Banarji, Kapil Chandra	Clerk, C A O's Office, E I R	E I R House	Hindu
1785	Banarji, Karunakinkar, BA, BT	Assistant Master, Hindu School	College Square	ditto
1786	Banarji, Karunamaya	Assistant, Bird & Co	1-1, Clive Street	ditto
1787	Banarji, Khagendra Nath	Clerk, Burmah Shell Co of India, Ld	Hongkong House	ditto
1788	Banarji, Kiriti Bhusan	Assistant, Accountant-General's Office, Bengal	Treasury Buildings	ditto
1789	Banarji, Kishori Mohan	Assistant, The Apcar Collieries, Ld	2, Fairlie Place	ditto
1790	Banarji, Krishna Das	Assistant, Accountant-General's Office, Bengal	Treasury Buildings	ditto
1791	Banarji, Krishnadhan	Head Clerk, Traffic Department, E B R	3, Koilaghat Street	ditto
1792	Banarji, Krishnaprasad	Assistant, Hoare Miller & Co	5, Fairlie Place	ditto
1793	Banarji, Kshetradas	Accounts Clerk, C E's Office, E I R	E I R House	ditto
1794	Banarji, Kshetra N	Assistant, F W Heilgers & Co	1-1, Clive Street	ditto
1795	Banarji, Kshitish Chandra	R W B, E B R	3, Kaylaghat Street	ditto
1796	Banarji, Kshitish Chandra	Head Clerk & Accountant, Krupp Indian Trading Co, Ld	22, Canning Street	ditto
1797	Banarji, Kuber Chandra	Inspector, Imperial Chemical Industries (India), Ld	18, Strand Road	ditto
1798	Banarji, Kulada Bhusan	Clerk, Telegraph Check Office	33, Dalhousie Square, South	ditto
1799	Banarji, Lal Mohan	Assistant, A-G's Office, Bengal	Treasury Buildings	ditto
1800	Banarji, Lal Mohan	Accountant, James Luke & Sons	7, Royal Exchange Place	ditto
1801	Banarji, Lal Mohan	Clerk, Telegraph Check Office	33, Dalhousie Square, South	ditto
1802	Banarji, L M	Salesman, G E C (India), Ld	Magnet House, Chittaranjan Avenue, South.	ditto

1803	Banarji, Madhusudan	Assistant, Bengal Secretariat, L S-G Department	Writers' Buildings	ditto
1804	Banarji, Makhan Lal	Assistant, North British & Mercantile Insurance Co, Ld	101-1, Clive Street	ditto
1805	Banarji, Manamohan	Clerk, D A G P & T Office	7, Koilaghat Street	ditto
1806	Banarji, Manamohan	Head Assistant, Superintending Engineer's Office, Electrical Circle, Bengal	Writers' Buildings	ditto
1807	Banarji, Manamohan	Assistant, Controller's Office, Calcutta University	Senate House	ditto
1808	Banarji, Manas Nath, MA	Manager, Sooresh Chandra Mookerjee & Co	11, Raja Woodmunt Street	ditto
1809	Banarji, Manatosh, MSc	Assistant, Commercial Intelligence Department	1, Council House Street	ditto
1810	Banarji, Manick Mohan	Clerk, Telegraph Check Office	33, Dalhousie Square, South	ditto
1811	Banarji, Mani Lal	Clerk, D A G P & T Office	7, Koilaghat Street	ditto
1812	Banarji, Manindra Lal	Head Clerk, Imperial Library	6, Esplanade, East	ditto
1813	Banarji, Manindra Nath	Sub-Head, C A O's Office, E I R	E I R House	ditto
1814	Banarji, Manindra Nath	Clerk, Shaw Wallace & Co	4, Bankshall Street	ditto
1815	Banarji, Manindra Nath	Chief Clerk, American Foreign Insurance Association	8, Clive Street	ditto
1816	Banarji, Manmatha Nath	Clerk, Gillanders. Arbuthnot & Co	8, Clive Street	ditto
1817	Banarji, Manmatha Nath	Clerk, C A O's Office, E I R	E I R House	ditto
1818	Banarji, Manmatha Nath	Assistant, Bird & Co	1-1, Clive Street	ditto
1819	Banarji, Manmatha Nath	Clerk, Calcutta Improvement Trust	5, Clive Street	ditto
1820	Banarji, Manmatha Nath	Cashier, R B Rodda & Co	2, Wellesley Place	ditto
1821	Banarji, M N	Accounts Clerk, Sulzer Brothers	4, Lyons Range	ditto

No.	Names	Style or calling	Residence or place of business.	Religion.
1822	Banarji, Mohit Mohan ..	.. Assistant, Education Department, Bengal Secretariat	.. Writers' Buildings ..	.. Hindu
1823	Banarji, Mukteshwar ..	.. Head Draftsman, Engineer's Office, E B R ..	.. 3, Kaylaghat Street ..	.. ditto
1824	Banarji, Murali Bhusan, BSc	.. Assessing Inspector, Calcutta Corporation ..	.. Municipal Office ..	.. ditto
1825	Banarji, Murari Mohan	.. Clerk Burmah Shell Co. of India. Ltd ..	.. Hongkong House ..	.. ditto
1826	Banarji, N ..	.. Assistant, Barry & Co	.. 2, Fairlie Place ..	.. ditto
1827	Banarji, N ..	.. Clerk, Heatly & Gresham, Ld	.. 6, Waterloo Street ..	.. ditto
1828	Banarji, N ..	.. Head Clerk, Medical Department, E B R ..	.. 3, Kaylaghat Street ..	.. ditto
1829	Banarji, Nabani Lall ..	.. Head Clerk, G F Playfair & Co	.. 27-7, Waterloo Street ..	.. ditto
1830	Banarji, Nagendra Nath	.. Clerk, Martin & Co	.. 12, Mission Row ..	.. ditto
1831	Banarji, Nagendra Nath ..	.. Assistant, Mackinnon, Mackenzie & Co	.. 16, Strand Road ..	.. ditto
1832	Banarji, Nagendra Nath	.. Stenographer, Bengal Secretariat, Finance Department	.. Writers' Buildings ..	.. ditto
1833	Bonarji Nakul Chandra	.. Assistant, Accounts Department, Calcutta Corporation	.. Municipal Office ..	.. ditto
1834	Banarji, Nakuleshwar ..	.. Clerk, Jardine, Skinner & Co	.. 4, Clive Row ..	.. ditto
1835	Banarji, Nakuleshwar ..	.. Assistant, A G's Office, Bengal	.. Treasury Buildings ..	ditto
1836	Banarji, Nakur Krishna ..	.. Clerk, Calcutta Stock Exchange Assen, Ld ..	.. 7, Lyons Range ..	.. ditto
1837	Banarji, Nalkanto ..	.. Accountant, C A O's Office, E I R	.. E I R House ..	.. ditto
1838	Banarji, Nalini Kanta ..	.. Clerk, Turner, Morrison & Co, Ld	.. 6, Lyons Range ..	.. ditto

1839	Banarji, Nalini Kanta	Clerk, Agent's Office. E B R	3, Kaylaghat Street	ditto
1840	Banarji, Nanda Lal	Assistant, Begg Dunlop & Co, Ld	2, Hare Street	ditto
1841	Banarji, Nani Gopal	Assistant, Patent Office	1, Council House Street	ditto
1842	Banarji, Nani Gopal	Clerk, Gillanders, Arbuthnot & Co	8, Clive Street	ditto
1843	Banarji, Narayan Chandra	Assistant, Andrew Yule & Co, Ld	8, Clive Row	ditto
1844	Banarji, Narayan Chandra	Clerk, Place Siddons & Gough	6, Lyons Range	ditto
1845	Banarji, Narendra Nath	Head Assistant, Office of the Commissioner of Income-tax	Imperial Secretariat Buildings	ditto
1846	Banarji, Narendra Nath	Clerk, Office of the Chief Mining Engineer, Railway Board	1, Council House Street	ditto
1847	Banarji, Narendra Nath	Assistant, Ludlow Jute Co, Ld	7, Royal Exchange Place	ditto
1848	Banarji, Narendra Nath	Assistant, Bird & Co	1-1, Clive Street	ditto
1849	Banarji, Narendra Nath	Assistant, T E Bevan & Co, Ld	Grosvenor House	ditto
1850	Banarji, Narendra Nath	Assistant Treasurer, Calcutta Tramways Co, Ltd	7, Church Lane	ditto
1851	Banarji, Naresh Chandra	Nazir, Calcutta Collectorate	3, Charnock Place	ditto
1852	Banarji, Nikhil Bhusan	Assistant, Accountant-General's Office, Bengal	Treasury Buildings	ditto
1853	Banarji, Nilambar	Assistant, Bengal Chamber of Commerce	2, Clive Street	ditto
1854	Banarji, Nirad Krishna, MA	Assistant, Accountant-General's Office, Bengal	Treasury Buildings	ditto
1855	Banarji, Nirmal Chandra, BA	Assistant, Central Stationery Office	3, Church Lane	ditto
1856	Banarji, Nirmal Chandra	Clerk, D A G P & T Office	7, Koilaghat Street	ditto

No.	Names.	Style or calling.	Residence or place of business.	Religion.
1857	Banarji, Nirmal K	Rent Collector, Calcutta Improvement Trust	5, Clive Street	Hindu
1858	Banarji, Nitya Ranjan, BA	S A S Clerk, Army Factory Accounts	6, Esplanade, East	ditto
1859	Banarji, N N	Cashier, Remington Rand, Inc	3, Council House Street	ditto
1860	Banarji, Nripendra Chandra, BA	Assistant, Accountant-General's Office, Bengal	Treasury Buildings	ditto
1861	Banarji, Nripendra Lal	Assistant, Calcutta University	Senate House	ditto
1862	Banarji, Nripendra Nath	Cashier, Landale & Clark, Ld	11, Clive Street	ditto
1863	Banarji, Nripendra Nath	Clerk, Gillanders Arbuthnot & Co	8, Clive Street	ditto
1864	Banarji, Nutbihari	Assistant, Mackinnon, Mackenzie & Co	16, Strand Road	ditto
1865	Banarji, Panchanan, MA	Assessment Clerk, Assessor's Department, Calcutta Corporation	Municipal Office	ditto
1866	Banarji, Panchanan	Assistant, Accountant-General's Office, Bengal	Treasury Buildings	ditto
1867	Banarji, Panchanan, BA	Clerk, D A G P & T Office	7, Koilaghat Street	ditto
1868	Banarji, Panchanan	Assistant, Commercial Intelligence Department	1, Council House Street	ditto
1869	Banarji, Panchu Charan	Head Clerk, Mechl Department, E B R	3, Kaylaghat Street	ditto
1870	Banarji, Pankaj Kumar, BSc	Clerk, D A G P & T Office	7, Koilaghat Street	ditto
1871	Banarji, Pannalal	Assistant, Bird & Co	1-1, Clive Street	ditto
1872	Banarji, Pannalal	Assistant, Mackinnon Mackenzie & Co	16, Strand Road	ditto
1873	Banarji, Paresh Nath	Assistant, Accounts Department, Calcutta Corporation	Municipal Office	ditto
1874	Banarji, Pashupati, MA	Clerk, D A G P & T Office	7, Koilaghat Street	ditto

1875	Banarji, Pataki Charan, MA	Clerk, D A G P & T Office	7, Koilaghat Street	ditto
1876	Banarji, Patit Paban	Clerk, Burmah Shell Co of India, Ld	Hongkong House	ditto
1877	Banarji, P G	Clerk, Heatly & Gresham, Ltd	6, Waterloo Street	ditto
1878	Banarji, Phani Bhusan	Assistant, Butterworth & Co (India), Ld	Chowringee Square	ditto
1879	Banarji, Phanindra Nath	Clerk, D A G P & T Office	7, Koilaghat Street	ditto
1880	Banarji, Phanindra Nath	Clerk, Imperial Bank of India	3, Strand Road	ditto
1881	Banarji, Prabodh Chandra	Steno-typist, Liverpool & London and Globe Insurance Co, Ld	26, Dalhousie Square	ditto
1882	Banarji, Prafulla Ch	Assistant Accountant, Calcutta Corporation	79, Cornwallis Street	ditto
1883	Banarji, Prafulla Chandra	Assistant, Bengal Secretariat, L S-G Department	Writers' Buildings	ditto
1884	Banarji, Prafulla Charan (No I)	Clerk, Accountant-General's Office, Bengal	Treasury Buildings	ditto
1885	Banarji, Prafulla Charan (No II), BA	Assistant, Accountant-General's Office, Bengal	Treasury Buildings	ditto
1886	Banarji, Prafulla Kumar (No I)	Clerk, Stationery Stores (Central)	3, Church Lane	ditto
1887	Banarji, Prakash Chandra, BA	Assistant, Calcutta University	Senate House	ditto
1888	Banarji, Prakash Chandra	Clerk, R Sim & Co, Ld	2 Clive Row	ditto
1889	Banarji, Pramath Nath, MA	Assistant, Bengali Translator's office	Writers' Buildings	ditto
1890	Banarji, Prasad Das	Clerk, D A G P & T Office	7, Koilaghat Street	ditto
1891	Banarji, Prasad Das	Reader, Government of India Press	8, Hastings Street	ditto
1892	Banarji, Provas Chandra	Supervisor, Drainage Department, Calcutta Corporation	Municipal Office	ditto

No.	Names.	Style or calling.	Residence or place of business.	Religion.
1893	Banarji, Provat Chandra	Lecturer, Government Commercial Institute	11, Hastings Street	Hindu
1894	Banarji, Pravat Kusum	Clerk, Pre-Audit Section, Port Commissioners' Office	Strand Road	ditto
1895	Banarji, Pulin Bihari	Sub-Head, C A O's Office, E I R	E I R House	ditto
1896	Banarji Pulin Behari, BA	Assistant, Finance Dept, Bengal Secretariat	Writers' Buildings	ditto
1897	Banarji, Pulin Bihari	Assistant, Andrew Yule & Co, Ld	8, Clive Row	ditto
1898	Banarji, Purna Chandra	Clerk, Burmah Shell Co of India, Ltd	Hongkong House	ditto
1899	Banarji, Purna Chandra	Assistant, Balmer, Lawrie & Co, Ld	103, Clive Street	ditto
1900	Banarji, Radhakinkar, BA	Head Reader, Bengal Library	Writers' Buildings	ditto
1901	Banarji, Radhikamohan	Clerk, Telegraph Check Office	33, Dalhousie Square (South)	ditto
1902	Banarji, Radhika Prasanna	Assistant, J Thomas & Co	8, Mission Row	ditto
1903	Banarji, Radhika Ranjan, BA	Assistant, A G's Office, Bengal	Treasury Buildings	ditto
1904	Banarji, Rajani Mohan	Reader, Calcutta Corporation Press	Municipal Office	ditto
1905	Banarji, Rajendra Lal	Clerk, Licensed Measurers Department	2, Clive Street	ditto
1906	Banarji, Rajendra Nath	Stenographer & Librarian, YMCA	86, College Street	Christian
1907	Banarji, Raj Kumar, BSc	Assistant, Bengal Secretariat, Finance Department	Writers' Buildings	Hindu
1908	Banarji, Ramchandra, BA	Clerk, D A G P & T Office	7, Koilaghat Street	ditto
1909	Banarji, Rameshwar	Clerk, Turner, Morrison & Co, Ld	6, Lyons Range	ditto

1910	Banarji, Rajendra Nath	Assistant. Calcutta University	Senate House	ditto
1911	Banarji R C	Clerk, Calcutta Mint	47, Strand Road	ditto
1912	Banarji, Sachidananda	Head Clerk, Jardine Skinner & Co	4, Clive Row	ditto
1913	Banarji, Sanjiban	Clerk, Mercantile Bank of India, Ld	8, Clive Street	ditto
1914	Banarji, Santos Kumar	Cashier, Commercial Intelligence Department, India	1, Council House Street	ditto
1915	Banarji, Santos Kumar	Clerk, Pre-Audit Section, Port Commissioners' Office	Strand Road	ditto
1916	Banarji, Santos Kumar	Stenographer, Office of His Majesty's Senior Trade Commissioner in India.	4, Fairlie Place	ditto
1917	Banarji, Santos Kumar	Clerk, C A O's Office, E I R	E I R House	ditto
1918	Banarji, Santos Kumar	Clerk, D A G P & T Office	7, Koilaghat Street	ditto
1919	Banarji, Saroj Nath, MA	Assistant, A-G's Office, Bengal	Treasury Buildings	ditto
1920	Banarji, Satipada	Clerk, Telegraph Check Office	33, Dalhousie Square, South	ditto
1921	Banarji, Satish Chandra	Assistant, Bengal Secretariat, Judicial Department	Writers' Buildings	ditto
1922	Banarji, Satish Chandra	Assistant, Bengal Secretariat, Central Despatch Office	Writers' Buildings	ditto
1923	Banarji, Satish Chandra, BL	Inspector, License Department, Calcutta Corporation	Municipal Office	ditto
1924	Banarji, Satish Chandra, BA	Assistant, Income-tax Office	3, Government Place, West	ditto
1925	Banarji, Satish Chandra, BA	Stenographer and Council Reporter	Writers' Buildings	ditto
1926	Banarji, Satish Chandra	Assistant, Calcutta University	Senate House	ditto
1927	Banarji, Satish Ch, BA, BL	Clerk, Telegraph Check Office	33, Dalhousie Square, South	ditto

No.	Names.	Style or calling.	Residence or place of business.	Religion.
1928	Banarji, Satya Charan ..	.. Head Clerk, Government Commercial Institute ..	.. 11, Hastings Street ..	.. Hindu
1929	Banarji, Satya Charan ..	.. Assistant, Price, Waterhouse, Peat & Co	.. B-4, Clive Buildings ..	.. ditto
1930	Banarji, Satya Kinkar, BA	.. Assistant, Calcutta University	.. Senate House ..	.. ditto
1931	Banarji, Satyendra Nath	.. Assistant, Accountant-General's Office, Bengal ..	.. Treasury Buildings ..	.. ditto
1932	Banarji, S C ..	.. Assistant, Barry & Co	.. 2, Fairlie Place ..	.. ditto
1933	Banarji, Shachindra Nath, MSc	.. Lecturer, Ripon College	.. 24, Harrison Road ..	.. ditto
1934	Banarji, Shachindra Nath, B A	.. Clerk, Army Factory Accounts	.. 6 Esplanade, East ..	.. ditto
1935	Banarji, Shachindra Nath	.. Cashier, Hoare Miller & Co, Ld	.. 5, Fairlie Place ..	.. ditto
1936	Banarji, Shailendra Chandra	.. Clerk, D A G P & T Office	.. 7, Koilaghat Street ..	.. ditto
1937	Banarji, Shailendra Nath	.. Engineer, English Electric Co, Ld	.. D-4, Clive Buildings ..	.. ditto
1938	Banarji, Shailendra Nath	.. Clerk, C E S C, Ld	.. Victoria House ..	.. ditto
1939	Banarji, Sharat Chandra	.. Assistant, Balmer, Lawrie & Co, Ld	.. 103, Clive Street ..	.. ditto
1940	Banarji, Sharat Chandra	.. Assistant, Burn & Co, Ld	.. 12, Mission Row ..	.. ditto
1941	Banarji, Sharat Kumar, B Sc	.. Assistant Analyst, Bengal Public Health Laboratory	.. Chittaranjan Avenue ..	.. ditto
1942	Banarji, Shib Das ..	.. Assistant, Mackinnon Mackenzie & Co	.. 16, Strand Road ..	.. ditto
1943	Banarji, Shibdayal ..	.. Assistant, Burn & Co, Ld	.. 12, Mission Row ..	.. ditto
1944	Banarji, Shibkrishna, BA ..	.. Assistant, Accountant-General's Office, Bengal ..	.. Treasury Buildings ..	.. ditto
1945	Banarji, Shib Narayan ..	.. Assistant, Indian Stores Department ..	.. 6, Esplanade, East ..	.. ditto

1946	Banarji, Shrish Chandra	Clerk, Telegraph Check Office	33, Dalhousie Square (South)	ditto
1947	Banarji, Shyamapada	Head Assistant (Coal Shipping), Macneill & Co	2, Fairlie Place	ditto
1948	Banarji, Shyamapada BA,	Assessor, Income-tax Office	3, Government Place (West)	ditto
1949	Banarji, Shyamranjan	Assistant, Income-tax Office	1, Hare Street	ditto
1950	Banarji, Sisir Kumar	Clerk, D A G P & T Office	7, Koilaghat Street	ditto
1951	Banarji, Sivamoy, B Sc	Assistant, Patent Office	1, Council House Street	ditto
1952	Banarji, S K	Assistant, Queensland Insurance Co, Ld	6, Royal Exchange Place	ditto
1953	Banarji, Sourendra Mohan	Demonstrator, Presidency College	86-1, College Street	ditto
1954	Banarji, Subodh Kumar	Clerk, D A G P & T Office	7, Koilaghat Street	ditto
1955	Banarji, Sudhir Chandra	Stenographer, Burmah Shell Co. of India, Ltd.	Hongkong House	ditto
1956	Banarji, Sudhir Chandra	Computor, Govt of India Press	8, Hastings Street	ditto
1957	Banarji, Sudhir Chandra	Clerk, Imperial Bank of India	3, Strand Road	ditto
1958	Banarji, Sudhir Chandra	Assistant, Bengal Secretariat, Political Department (Special)	Writers' Buildings	ditto
1959	Banarji, Sudhir Kumar	Assistant Superintendent, Accountant-General's Office, Bengal	Treasury Buildings	ditto
1960	Banarji, Sudhir Kumar, M Sc	Demonstrator, Scottish Churches College	4, Cornwallis Square	ditto
1961	Banarji, Sudhir Kumar, BA	Assistant, Engineer's Office, District No II, Calcutta Corporation	22, Mirzapore Street	ditto
1962	Banarji, Surendra Chandra	Surveyor and Draftsman, Calcutta Corporation	Municipal Office	ditto
1963	Banarji, Surendra Krishna	Assistant, Office of the I-G of Registration, Bengal	Writers' Buildings	ditto

No.	Names.	Style or calling	Residence or place of business.	Religion.
1964	Banarji, Surendra Mohan	Assistant, Mackinnon, Mackenzie & Co	16, Strand Road	Hindu
1965	Banarji, Surendra Nath	Assistant, Bengal Secretariat, Finance Department	Writers' Buildings	ditto
1966	Banarji, Surendra Nath, No I	Assistant, Office of the Director of Public Instruction, Bengal	Writers' Buildings	ditto
1967	Banarji, Surendra Nath, No II	Assistant, Office of the Director of Public Instruction, Bengal	Writers' Buildings	ditto
1968	Banarji, Surendra Nath	Assistant, Andrew Yule & Co, Ld	8, Clive Row	ditto
1969	Banarji, Surendra Nath, MA	Demonstrator, Ripon College	24, Harrison Road	ditto
1970	Banarji, Surendra Nath	Clerk, Imperial Bank of India	3, Strand Road	ditto
1971	Banarji, Surendra Nath, No I	Assistant, Mackinnon, Mackenzie & Co	16, Strand Road	ditto
1972	Banarji, Surendra Nath, No II	Assistant, Mackinnon, Mackenzie & Co	16, Strand Road	ditto
1973	Banarji, Surendra Nath	Clerk, Burmah Shell Co of India, Ld	Hongkong House	ditto
1974	Banarji, Suresh Chandra	Clerk, Calcutta Improvement Trust	5, Clive Street	ditto
1975	Banarji, Suresh Chandra	Outstanding Inspector, E B R	3, Kailaghat Street	ditto
1976	Banarji, Suresh Chandra	Clerk, C O P S's Office, E I R	E I R House	ditto
1977	Banarji, Sushil Chandra, BA	Assistant, Accountant-General's Office, Bengal	Treasury Buildings	ditto
1978	Banarji. Sushil Chandra	Assistant, Controller's Office, Calcutta University	Senate House	ditto
1979	Banarji, Sushil Kumar, BA	Inspector, License Department, Calcutta Corporation	Municipal Office	ditto
1980	Banarji, Taradas	Rent Collector, Calcutta Improvement Trust	5, Clive Street	ditto

1981	Banarji, Tarakdas	Assistant, Accountant-General's Office, Bengal	Treasury Buildings		ditto
1982	Banarji, Tinkari. BA	Assistant, Accountant-General's Office, Bengal	Treasury Buildings		ditto
1983	Banarji, Tulsi Charan	Clerk, Pre-Audit Section, Port Commissioners' Office	Strand Road		ditto
1984	Banarji, Tulsidas	Assistant, Bengal Secretariat, Appointment Department	Writers' Buildings		ditto
1985	Banarji, Tulsidas BA	Assistant, Accountant-General's Office, Bengal	Treasury Buildings		ditto
1986	Banik, Sita Nath	Accounts Clerk, E B R	3, Kailaghat Street		ditto
1987	Baqui, Abdul (Maulvi), MA	Lecturer, Islamia College	8, Wellesley Street		Mahomedan
1988	Baral, Amullya Kumar	Clerk, Burmah Shell Co of India, Ld	Hongkong House		Hindu
1989	Baral, Bijaya Kali	Clerk, Burmah Shell Co of India. Ld	Hongkong House		ditto
1990	Baral, Bishwanath	Assistant, Lovelock & Lewes	4, Lyons Range		ditto
1991	Baral, Chandi Charan	Assistant, Reserve Bank of India	8, Council House Street		ditto
1992	Baral, Deb Bhusan	Book-keeper, Jardine Skinner & Co	4, Clive Row		ditto
1993	Baral, Gopeshwar	Clerk, Gillanders, Arbuthnot & Co	8, Clive Street		ditto
1994	Baral, Gorachand	Stenographer, I T Office	3, Government Place, West		ditto
1995	Baral, Nritya Gopal	Assistant, Lovelock & Lewes	4, Lyons Range		ditto
1996	Baral, Shashi Bhusan	Cashier, G Atherton & Co (Eastern), Ld	8, Clive Street		ditto
1997	Barary, Manindra Mohan	Clerk, No. I Drawing Office, Survey of India	13, Wood Street		ditto
1998	Barat, Krishnapada	Assistant, Income-tax Office	6, Esplanade, East		ditto
1999	Barat, Panchu Gopal	Stenographer, Martin & Co	12, Mission Row		ditto

No.	Names.	Style or calling.	Residence or place of business.	Religion.
2000	Bardhan, Bata Krishna ..	Store-keeper, Balmer Lawrie & Co, Ld ..	103, Clive Street ..	Hindu
2001	Bardhan, Jashoda Kishore ..	Head Assistant, Office of the Superintending Engineer, S Circle, P W D	3, Government Place, West ..	ditto
2002	Bari, Abdul (Maulvi) ..	Assistant, Bengal Secretariat, Appointment Department ..	Writers' Buildings ..	Mahomedan
2003	Barman, Jasoda Nandan ..	Assistant, Bengal Secretariat, L S-G Department ..	Writers' Buildings ..	Hindu
2004	Barman, Manik Chandra ..	Clerk, C O P S's Office, E I R ..	E I R House ..	ditto
2005	Barman, Shachindra Mohan, MSC, BL	Supervisor, Mathematical Instrument Office ..	15, Wood Street ..	ditto
2006	Basak, Ahindra Kumar, MA ..	Inspector, Collection Department, Calcutta Corporation ..	Municipal Office ..	ditto
2007	Basak, Balai Chand ..	Accountant, Hoare Miller & Co, Ld ..	5, Fairlie Place ..	ditto
2008	Basak, Brindaban Chandra ..	Assistant, Office of the Superintending Engineer, P W D, Presidency Circle	Writers Buildings ..	ditto
2009	Basak, Debendra Nath ..	Clerk, D A G P & T Office ..	7, Kailaghat Street ..	ditto
2010	Basak, Dhirendra Kumar, BSC ..	Assistant, Accountant-General's Office, Bengal ..	Treasury Buildings ..	ditto
2011	Basak, Jahar Lal ..	Clerk, Commercial Union Assurance Co, Ld ..	32, Dalhousie Square ..	ditto
2012	Basak, Lal Bihari ..	Assistant, Union Insurance Society of Canton, Ld ..	8, Clive Street ..	ditto
2013	Basak, Manamohan ..	Clerk, *Statesman*, Ld ..	Statesman House ..	ditto
2014	Basak, Manamohan ..	Cashier, James Murray & Co ..	5, Old Court House Street ..	ditto
2015	Basak, Murari Mohan ..	Assistant, Andrew, Yule & Co, Ld ..	8, Clive Row ..	ditto
2016	Basharatullah, Md ..	Head Maulvi, Calcutta Madrasah ..	19, Wellesley Square ..	Mahomedan

2017	Basir, Md	Clerk, Telegraph Check Office	33, Dalhousie Square, South	ditto
2018	Basu, Abala Kanta	Assistant, Bird & Co	1-1, Clive Street	Hindu
2019	Basu, Abanishwar, BL	Assessing Inspector, Calcutta Corporation	Municipal Office	ditto
2020	Basu. Abhaya Pada	Clerk, Union Insurance Society of Canton, Ld	8, Clive Street	ditto
2021	Basu, Abhaya Pada	Salesman, Symonds & Co	11, Clive Street	ditto
2022	Basu, Ajit Kumar, BA	Examiner of Accounts, Income-tax Office	6, Esplanade, East	ditto
2023	Basu, Ajit Kumar	Assistant, Martin & Co	12, Mission Row	ditto
2024	Basu, Akshaya Kumar	Assistant, F W Heilgers & Co	1-1, Clive Street	ditto
2025	Basu, Akshaya Kumar	Head Clerk, Calcutta Improvement Trust	5, Clive Street	ditto
2026	Basu, Amar Krishna	Head Clerk, Marconi Co, Ld	6, Old Post Office Street	ditto
2027	Basu, Amitava	Clerk, Imperial Bank of India	3, Strand Road	ditto
2028	Basu, Amrita Lal	Clerk, D A G P & T Office	7, Koilaghat Street	ditto
2029	Basu, Anathnath	Lecturer, Calcutta University	Senate House	ditto
2030	Basu, Anil Nath	Clerk, Booking Section, Port Commissioners' Office	Strand Road	ditto
2031	Basu, Anukul Chandra	Assistant, Royal Calcutta Turf Club	11, Russell Street	ditto
2032	Basu, Arunodaya	Chief Clerk, C O P S's Office, E I R	E I R House	ditto
2033	Basu, Atul Krishna	Assistant, Mackinnon, Mackenzie & Co	16, Strand Road	ditto
2034	Basu, Atul Krishna	Assistant, Commercial Intelligence Department	1, Council House Street	ditto

No.	Names.	Style or calling	Residence or place of business.	Religion.
2035	Basu, Badal Chandra ..	.. Stenographer, Kalamazoo, Ld	.. 2/3, Clive Street	Hindu
2036	Basu, Balai Chandra, MB	.. Sanitary Officer, Calcutta Corporation, District No. 1	.. 79, Cornwallis Street	ditto
2037	Basu, Barada Prasanna	.. Assistant, Cox & Kings (Agents), Ld	.. 5, Bankshall Street	ditto
2038	Basu, Basanta K ..	.. Assistant, Grahams Trading Co (India), Ld ..	.. 6, Lyons Range	ditto
2039	Basu, Basanta Kumar ..	.. Clerk, D A G P & T Office	.. 7, Koilaghat Street	ditto
2040	Basu, Basanta Kumar, II	.. Clerk, Telegraph Check Office	.. 33, Dalhousie Square, South ..	ditto
2041	Basu, Basanta Kumar	.. Cashier, Balmer Lawrie & Co Ltd	.. 103, Clive Street	ditto
2042	Basu, Bhudeb Shankar ..	.. Chief Clerk, C E S C, Ld	.. Victoria House	ditto
2043	Basu, Bhupendra Nath ..	.. Assistant, Begg, Dunlop & Co, Ld	.. 2, Hare Street	ditto
2044	Basu, Bibhas Chandra ..	.. Assistant, Accountant-General's Office, Bengal ..	.. Treasury Buildings	ditto
2045	Basu, Bibhuti Bhusan ..	.. Clerk Martin & Co.	.. 12, Mission Row	ditto
2046	Basu, Bijalinath ..	.. Stenographer, National City Bank of New York ..	.. 4, Clive Street	ditto
2047	Basu, Bijaya Krishna ..	.. Assistant, Central Stationery Office	.. 3, Church Lane	ditto
2048	Basu, Bijaya Krishna, II	.. Clerk, Telegraph Check Office	.. 33, Dalhousie Square, South ..	ditto
2049	Basu, Bijaya Krishna ..	.. Clerk, C E's Office, E I R	.. E I R House	ditto
2050	Basu, Binaya Krishna ..	.. Clerk, Calcutta Improvement Trust	.. 5, Clive Street	ditto
2051	Basu, Binode Bihari .	.. Representative, Spicers (Export), Ld	.. Stephen House	ditto

2052	Basu, Birendra Nath	Accountant, Banga Luxmi Soap Works	28, Pollock Street	ditto
2053	Basu, Bishnu Pada	Clerk, Telegraph Check Office	33, Dalhousie Square, South	ditto
2054	Basu, Bisweswar Prasad	Assistant, Bengal Secretariat, L S-G Department	Writers' Buildings	ditto
2055	Basu, B K	Assistant, Office of the Inspector-General of Prisons, Bengal	Writers' Buildings	ditto
2056	Basu, Braja Gopal	Clerk, Booking Section, Port Commissioners' Office	Strand Road	ditto
2057	Basu, Buddhadeb, MA	Lecturer, Ripon College	24, Harrison Road	ditto
2058	Basu, Debendra Nath, BSc	Salesman, Adair Dutt & Co, Ld	5, Dalhousie Square	ditto
2059	Basu, Debendra Nath	Director, The New Bengal Bank, Ld	15, Clive Street	ditto
2060	Basu, Dhirendra Kumar	Surveyor, Calcutta Improvement Trust	5, Clive Street	ditto
2061	Basu, Dhirendra Nath	Accountant, Unique Assurance Co, Ld	10, Canning Street	ditto
2062	Basu, Dhirendra Nath	Assistant, Andrew Yule & Co, Ld	8, Clive Row	ditto
2063	Basu, Dhirendra Nath, MA	Assistant, Board of Revenue, Bengal	Writers' Buildings	ditto
2064	Basu, Digindra Nath	Assistant, Bengal Chemical & Pharmaceutical Works, Ld	31, Chittaranjan Avenue, South	ditto
2065	Basu, Dulal Krishna, BA	Clerk, Deputy Accountant-General, Posts & Telegraphs Office	7, Koilaghat Street	ditto
2066	Basu, Durgapada, BA	Clerk, Telegraph Check Office	33, Dalhousie Square, South	ditto
2067	Basu, Durlav Ch	Clerk, Traffic Department, E B R	3, Koilaghat Street	ditto
2068	Basu, Dwijendra Chandra	Assistant, Government of India Press	8, Hastings Street	ditto
2069	Basu, Dwijendra Nath, BSc	Clerk, Army Factory Accounts	6, Esplanade East	ditto
2070	Basu, Dwijendra Nath	Assistant, Accountant-General's Office, Bengal	Treasury Buildings	ditto

No.	Names.	Style or calling.	Residence or place of business.	Religion.
2071	Basu, Ekkari	Assistant, Bengal Secretariat, Political Department	Writers' Buildings	Hindu
2072	Basu, G B	Clerk, C E S C, Ld	Victoria House	ditto
2073	Basu, G N	Clerk, C E S C, Ld	Victoria House	ditto
2074	Basu, Gobardhan	Assistant, Accountant-General's Office, Bengal	Treasury Buildings	ditto
2075	Basu, Gobordhan	Assistant Accountant, Lighting, Calcutta Corporation	Municipal Office	ditto
2076	Basu, Gopal Chandra	Clerk, D A G P & T Office	7, Koilaghat Street	ditto
2077	Basu, Gopal Chandra	Accountant, Office of the 2nd Land Aquisition Collector	5, Bankshall Street	ditto
2078	Basu, Gopal Krishna	Manager, Dass & Co	20, Strand Road	ditto
2079	Basu, Gopendra Krishna	Clerk, Central Stationery Office	3, Church Lane	ditto
2080	Basu, Gopendra Nath	Assistant, James, Finlay & Co, Ld	1, Clive Street	ditto
2081	Basu, Gostha Bihari	Assistant, Balmer, Lawrie & Co, Ld	103, Clive Street	ditto
2082	Basu, Gour Gopal	Clerk, D A G P & T Office	7, Koilaghat Street	ditto
2083	Basu, Haradhan	Clerk, Imperial Tobacco Co of India, Ld	37, Chowringhee	ditto
2084	Basu, Harendra Mohan	Assistant, Accountant-General's Office, Bengal	Treasury Buildings	ditto
2085	Basu, Haridas	Assistant, Accountant-General's Office, Bengal	Treasury Buildings	ditto
2086	Basu, Haridas	Accounts Clerk, E B R	Koilaghat Street	ditto

2087	Basu, Hari Pada, BA, BT	Assistant Head Master, Hare School	87, College Street	ditto
2088	Basu, Haripada	Reader, Government of India Press	8, Hastings Street	ditto
2089	Basu, Hazarilal	Clerk, Booking Section, Port Commissioners' Office	Strand Road	ditto
2090	Basu, Hem Chandra, BA	Assistant, Commercial Intelligence Department	1, Council House Street	ditto
2091	Basu, Hem Chandra	Head Clerk, Berthoud & Co	6, Royal Exchange Place	ditto
2092	Basu, Hiralal	Shipping Clerk, Williamson, Magor & Co	4, Mangoe Lane	ditto
2093	Basu, Hirendra Kumar	Assistant, Commercial Intelligence Department	1, Council House Street	ditto
2094	Basu, H K	W W Overseer, Calcutta Improvement Trust	5, Clive Street	ditto
2095	Basu, Indu Bhusan, MA, BL	Assistant, Bengali Translator's Office	Writers' Buildings	ditto
2096	Basu, Indu Bhusan	Assistant, Bengal Secretariat, Accounts Department	Writers' Buildings	ditto
2097	Basu, Jahar Lal	Accountant, The Indian School Supply Depot	Chittaranjan Avenue, South	ditto
2098	Basu, Jamini Kanta	Clerk, Royal Insurance Co, Ld	26 & 27, Dalhousie Square	ditto
2099	Basu, Jatindra Nath	Levlg Surveyor, Special Officer's Deptt, Calcutta Corporation	Municipal Office	ditto
2100	Basu, Jatindra Nath	Clerk, Imperial Bank of India	3, Strand Road	ditto
2101	Basu, Jatindra Nath	Assistant, Royal Insurance Co, Ld	26 & 27, Dalhousie Square	ditto
2102	Basu, Jatindra Nath	Draftsman, No. 1 Drawing Office, Survey of India	13, Wood Street	ditto
2103	Basu, Jishnu Kumar	Steno-Typist, Scottish Church College	4, Cornwallis Square	ditto

No.	Names.	Style or calling	Residence or place of business.	Religion.
2104	Basu, Jitendra Nath	Clerk, C C M's Office, E I R	E I R House	Hindu
2105	Basu, Jitendra Nath	Clerk, Union Insurance Society of Canton, Ld	8, Clive Street	ditto
2106	Basu, Jitendranath	Clerk, I G N & Ry Co, Ld	4, Fairlie Place	ditto
2107	Basu, J N	Salesman, Remington Rand, Inc	3, Council House Street	ditto
2108	Basu, Jnanendra Nath	Clerk, Imperial Bank of India	3, Strand Road	ditto
2109	Basu, Jogendra Nath	Assistant Accountant, English Electric Co, Ld	D-4, Clive Buildings	ditto
2110	Basu, Jogesh Chandra	Ledgerkeeper, Bombay Co, Ld	19, British Indian Street	ditto
2111	Basu, Jugal Kishore	Clerk, D A G P & T Office	7, Koilaghat Street	ditto
2112	Basu, Jyotish Ch, BA	Clerk, Army Factory Accounts	6, Esplanade, East	ditto
2113	Basu, Jyotish Chandra	Assistant, Lionel Edwards, Ld	D-1, Clive Buildings	ditto
2114	Basu, Jyotish Chandra	Inspector, Collection Department, Calcutta Corporation	Municipal Office	ditto
2115	Basu, Jyotsna Kanta	Professor, Bangabasi College	25-1, Scott Lane	ditto
2116	Basu, Kalidas	Shipping Clerk, Williamson, Magor & Co	4, Mangoe Lane	ditto
2117	Basu, Kalipada	Clerk, Lloyds Bank, Ld	101-1, Clive Street	ditto
2118	Basu, Kashinath	Clerk, Calcutta Improvement Trust	5, Clive Street	ditto
2119	Basu, Khagendra Krishna	Clerk, Imperial Tobacco Co of India, Ld	37, Chowringhee	ditto
2120	Basu, Khagesh Chandra	Lecturer, Sanskrit College	College Square	ditto

2121	Basu, Krishna Chandra	Clerk, D A G P & T Office	7, Koilaghat Street		ditto
2122	Basu, Krishnadas	Clerk, Port Commissioners' Office	Strand Road		ditto
2123	Basu, Krishnadas	Reference In charge, Mathematical Instrument Office	15, Wood Street		ditto
2124	Basu, Kshitindra Nath	Assistant, Income-tax Office	1, Hare Street		ditto
2125	Basu, Kumar Krishna	Assistant, Office of the Director of Public Instruction, Bengal	Writers' Buildings		ditto
2126	Basu, Kumud Kumar	Assistant, Imperial Library	6, Esplanade, East		ditto
2127	Basu, Lakshi Kanta	Clerk, D A G P & T Office	7, Koilaghat Street		ditto
2128	Basu, Lalit Mohan	Clerk, D A G P & T Office	7, Koilaghat Street		ditto
2129	Basu, Lalit Mohan	Stenographer, Surveyor's Deptt, Calcutta Corporation	Municipal Office		ditto
2130	Basu, Lalit Mohan	Head Clerk, Executive Engineer's Office, City Division	Writers' Buildings		ditto
2131	Basu, L M	Assistant, Jessop & Co, Ld	93, Clive Street		ditto
2132	Basu, Mahendra Lal	Assistant, Commercial Intelligence Department	1, Council House Street		dftto
2133	Basu, Manajit Madhab	Examiner of Stores, Indian Stores Department	6, Esplanade, East		Christian
2134	Basu, Manaranjan	Erector, Jewell Export Filter Co, Inc	10, Clive Street		Hindu
2135	Basu, Manindra Chandra	Assistant, Calcutta University	Senate House		ditto
2136	Basu, Manindra Nath	Clerk, Telegraph Check Office	33, Dalhousie Square, South		ditto
2137	Basu, Manindra Nath	Assistant, Balmer, Lawrie & Co, Ld	103, Clive Street		ditto
2138	Basu, Manindra Nath	Clerk, Calcutta Improvement Trust	5, Clive Street		ditto

No.	Names.	Style or calling.	Residence or place of business.	Religion.
2139	Basu, Manindra Nath	Stenographer, Harrisons & Crosfield, Ld	6, Church Lane	Hindu
2140	Basu, Manindra Nath	Head Draftsman, C R E's Office, P & A District	Fort William	ditto
2141	Basu, Manindra Nath	Accountant, Calcutta Collectorate	3, Charnock Place	ditto
2142	Basu, Manindra Nath	Clerk, Gillanders, Arbuthnot & Co	8, Clive Street	ditto
2143	Basu, Manindra Nath	Assistant Manager, Parry's Engineering, Ld	10, Clive Row	ditto
2144	Basu, Manmatha Nath	Assistant, Office of the Director of Industries, Bengal	40-1A, Free School Street	ditto
2145	Basu, Manoj Kumar	Salesman, Minimax, Ld	Mercantile Buildings	ditto
2146	Basu, Manoj Kumar	Assistant, Office of the Inspector-General of Registration, Bengal	Writers' Buildings	ditto
2147	Basu, Manoranjan	Erector, Jewell Export Filter Co, Inc	10, Clive Street	ditto
2148	Basu, Mati Lal	Accounts Clerk, E B R	3, Koilaghat Street	ditto
2149	Basu, Mati Lal	Clerk, D A G P & T Office	7, Koilaghat Street	ditto
2150	Basu, M N, BA	Assistant, S R Batliboi & Co	1-B, Old Post Office Street	ditto
2151	Basu, Naba Kumar	Clerk. D A G P & T Office	7, Koilaghat Street	ditto
2152	Basu, Nabin Chandra	Passed Accounts Clerk, Ex Engineer's Office, City Division	Writers' Buildings	ditto
2153	Basu, Nagendra Mohan	Assistant, Surgeon-General's Office, Bengal	Writers' Buildings	ditto
2154	Basu, Nalin Coomar	Journalist, *Statesman*, Ld	Statesman House	ditto
2155	Basu, Nanilal	Clerk, D A G P & T Office	7, Koilaghat Street	ditto
2156	Basu, Narayan Ch	Clerk, Chief Auditor's Office, E I R	E I R House	ditto
2157	Basu, Narayan Chandra, BA	Clerk, City Architect's Deptt, Calcutta Corporation	Municipal Office	ditto
2158	Basu, Narayan Prasad	Dy Cashier, Shaw Wallace & Co	4, Bankshall Street	ditto
2159	Basu, Narendra Nath, BA	Assistant, Accountant-General's Office, Bengal	Treasury Buildings	ditto

2160	Basu, Narendra Nath	Clerk, Mackinnon Mackenzie & Co	16, Strand Road	ditto
2161	Basu, Naresh Chandra	Stenographer, Calcutta Improvement Trust	5, Clive Street	ditto
2162	Basu, Naresh Chandra	Building Inspector, Calcutta Corporation	Municipal office	ditto
2163	Basu, Nirmal Chandra, BA	Clerk, D A G P & T Office	7, Koilaghat Street	ditto
2164	Basu, Nirendra Nath	Assistant, Accountant-General's Office, Bengal	Treasury Buildings	ditto
2165	Basu, N K (Sr)	Clerk, Heatly & Gresham, Ld	6, Waterloo Street	ditto
2166	Basu, N K (Jr)	Clerk, Heatly & Gresham, Ld	6, Waterloo Street	ditto
2167	Basu, Nripendra Krishna	Clerk, Place, Siddons and Gough	6, Lyons Range	ditto
2168	Basu, Nripendra Nath, MA	Clerk, D A G P & T Office	7, Koilaghat Street	ditto
2169	Basu, Nripendra Nath	Accounts Clerk, Lipton, Ld	9, Weston Street	ditto
2170	Basu, N	Assistant, Balmer Lawrie & Co, Ld	103, Clive Street	ditto
2171	Basu, Panchanan	Clerk, Mercantile Bank of India, Ld	8, Clive Street	ditto
2172	Basu, Panna Lal	Assistant, Surgeon-General's Office, Bengal	Writers' Buildings	ditto
2173	Basu, Pashupati	Engineer, Krupp Indian Trading Co, Ld	22, Canning Street	ditto
2174	Basu, Phanindra Nath	Bill Clerk, National Bank of India, Ld	104, Clive Street	ditto
2175	Basu, P N	Assistant, Guest, Keen, Williams, Ld	7, Council House Street	ditto
2176	Basu, Prabodh Chandra	Canvasser, Liverpool & London & Globe Insurance Co, Ld	26, Dalhousie Square	ditto
2177	Basu, Prabodh Chandra	Assistant, Royal Insurance Co, Ld	26 & 27, Dalhousie Square	ditto
2178	Basu, Prabodh Kanta, MA	Additional Officer, Central Bank of India, Ld	133, Cornwallis Street	ditto
2179	Basu, Prabodh Kumar, BA	Assistant Master, Oriental Seminary	336, Upper Chitpur Road	ditto

No.	Names	Style or calling.	Residence or place of business.	Religion.
2180	Basu, Prafulla Chandra, BL	Assistant, Bengal Secretariat, Accounts Department	Writers' Buildings	Hindu
2181	Basu, Prafulla Chandra	Assistant, Central Forms Store	166, Dharamtala Street	ditto
2182	Basu, Prafulla K	Outstanding Inspector, E B R	3, Koilaghat Street	ditto
2183	Basu, Prakash Chandra	Clerk, Imperial Bank of India	3, Strand Road	ditto
2184	Basu, Pramatha Nath	Prover, Photo-Litho Office, Survey of India	14, Wood Street	ditto
2185	Basu, Pramatha Nath	Head Clerk, Stores Deptt, E B R	3, Koilaghat Street	ditto
2186	Basu, Pramatha Nath	Assistant, Bengal Secretariat, Accounts Department	Writers' Buildings	ditto
2187	Basu, Pramil Chandra, BA	Assistant Librarian, Calcutta University	Senate House	ditto
2188	Basu, Prasad Das	Clerk, D A G P & T Office	7, Koilaghat Street	ditto
2189	Basu, Pratap Chandra	Assistant, Controller's Office, Calcutta University	Senate House	ditto
2190	Basu, Pravas Chandra	Clerk, D A G P & T Office	7, Koilaghat Street	ditto
2191	Basu, Pravas Chandra	Clerk, Lloyds Bank, Ld	101-1, Clive Street	ditto
2192	Basu, Pravas Chandra	Assistant, Office of the Inspector-General of Police	Writers' Buildings	ditto
2193	Basu, Pravas Kanta	Clerk, C O S Office, E I R	E I R House	ditto
2194	Basu, Pulin Chandra	Clerk, Burmah Shell Co of India, Ld	Hongkong House	ditto
2195	Basu, Pulin Dhan	Assistant, Accountant-General's Office, Bengal	Treasury Buildings	ditto
2196	Basu, Purna S, BSc	Head Clerk, S S Hogg Market Office	Hogg Market	ditto
2197	Basu, Rabindra Nath	Clerk, Imperial Bank of India	3, Strand Road	ditto
2198	Basu, Radha Kanta	Clerk, D A G P & T Office	7, Koilaghat Street	ditto

2199	Basu, Radharaman	Assistant, Lovelock & Lewes	4, Lyons Range	ditto
2200	Basu, Radharaman	Typist, Lardner North & Co	8, Strand Road	ditto
2201	Basu, Radhika Prasad	Assistant, Office of the Inspector-General of Prisons, Bengal	Writers' Buildings	ditto
2202	Basu, Rajendra Nath	Clerk, Telegraph Check Office	33, Dalhousie Square, South	ditto
2203	Basu, Raj Krishna	Stenographer, Traffic Department, E B R	3, Kaylaghat Street	ditto
2204	Basu, Rakhal Das	Inspector, Collection Department, Calcutta Corporation	Municipal Office	ditto
2205	Basu, Rakhal Das, BSc	Assistant, Accountant-General's Office, Bengal	Treasury Buildings	ditto
2206	Basu, Ramabhusan, BE	Proprietor, Hindustan Engineer & Construction Co	10, Hastings Street	ditto
2207	Basu, Ramani Kanta	Assistant, Accountant-General's Office, Bengal	Treasury Buildings	ditto
2208	Basu, Ramani Mohan	Accountant, Factory Inspection Department, Bengal	40-1A, Free School Street	ditto
2209	Basu, Ramendra Kumar, BL	Clerk, C A's Office, E I R	E I R House	ditto
2210	Basu, Ramesh Ch	Assistant, Grahams Trading Co (India), Ld	6, Lyons Range	ditto
2211	Basu, Ranendra N	Clerk, I G N & Ry Co, Ld	4, Fairlie Place	ditto
2212	Basu, Rangalal	Clerk, Norwich Union Fire Insurance Society, Ld	8, Old Court House Street	ditto
2213	Basu, Rash Bihari	Assistant, Ewing & Co, Ld	4, Clive Row	ditto
2214	Basu Rathindra Nath, BA	Inspector Surveyor, I T Office	3, Government Place, West	ditto
2215	Basu, Sahayaram	Professor, Bangabasi College	25-1, Scott Lane	ditto

No.	Names.	Style or calling.	Residence or place of business.	Religion.
2216	Basu, Sakti Kshetra	Clerk, E B R	3, Koilaghat Street	Hindu
2217	Basu, Santos Krishna	Assistant, Accounts Department, Calcutta Corporation	Municipal Office	ditto
2218	Basu, Santos Kumar	Asstt Cashier, P & O Banking Corporation, Ld	1, Fairlie Place	ditto
2219	Basu, Sarada Prasanna	Assistant Cashier, Lloyds Bank, Ld	101-1, Clive Street	ditto
2220	Basu, Sarat Chandra	Clerk, Imperial Bank of India	3, Strand Road	ditto
2221	Basu, Satish Chandra, MA	Teacher, Bangabasi Collage-School	19, Scott Lane	ditto
2222	Basu, Satish Chandra	Assistant, Royal Insurance Co, Ld	26 & 27, Dalhousie Square	ditto
2223	Basu, Satish Chandra	Clerk, Gillanders, Arbuthnot & Co	8, Clive Street	ditto
2224	Basu, Satyendra Krishna	Assistant, Office of the Director of Industries, Bengal	40-1A, Free School Street	ditto
2225	Basu, Shachindra Nath	Assistant, Accountant-General's Office, Bengal	Treasury Buildings	ditto
2226	Basu, Shachindra Nath	Revenue Assistant, Presidency Commissioner's Office	3, Charnock Place	ditto
2227	Basu, Shachipati	Assistant, Accountant-General's Office, Bengal	Treasury Buildings	ditto
2228	Basu, Shailendra Lal, BA	Clerk, Army Factory Accounts	6, Esplanade, East	ditto
2229	Basu, Shailendra Nath	Clerk, Chief Mining Engineer's Office, Railway Board	1, Council House Street	ditto
2230	Basu, Shailendra Nath	Assistant, Bird & Co	1-1, Clive Street	ditto
2231	Basu, Shailendra Nath	Manager to S C Ghose	5, Ezra Street	ditto
2232	Basu, Shailendra Nath	Assistant, Central Stationery Office	3, Church Lane	ditto
2233	Basu, Shambhu Gopal, BA	Assistant, Accountant-General's Office, Bengal	Treasury Buildings	ditto

2234	Basu, Shanti Kumar, BA	Assistant, Bengal Secretariat, Judicial Department	Writers' Buildings	ditto
2235	Basu, Shibanikinkar	Assistant, Accountant-General's Office, Bengal	Treasury Buildings	ditto
2236	Basu, Shital Chandra	Clerk, Imperial Bank of India	3, Strand Road	ditto
2237	Basu. Shrish Chandra	Clerk, Fire Department, South British Insurance Co, Ld	5, Clive Street	ditto
2238	Basu, Sitanath	Assistant, Macneill & Co	2, Fairlie Place	ditto
2239	Basu, Sourindra Mohan	Assistant, Accountant-General's Office, Bengal	Treasury Buildings	ditto
2240	Basu, Subodh Kumar	Lighting Inspector, Calcutta Improvement Trust	5, Clive Street	ditto
2241	Basu, Subodh Kumar, BSc	Assistant, Accountant-General's Office, Bengal	Treasury Buildings	ditto
2242	Basu, Subodh Kumar, MSc	Assistant, Accountant-General's Office, Bengal	Treasury Buildings	ditto
2243	Basu. Sudhir Chandra	Building Inspector, Calcutta, Corporation	Municipal Office	ditto
2244	Basu, Sudhir Chandra	Reader, P S's Office, E I R	E I R House	ditto
2245	Basu, Sudhir Chandra, BA	Assistant, Accountant-General's Office, Bengal	Treasury Buildings	ditto
2246	Basu, Sudhir Kumar	Assistant, Commissioner of Excise and Salt, Bengal	Writers' Buildings	ditto
2247	Basu, Sudhir Kumar	Inspector, Collection Department, Calcutta Corporation	Municipal Office	ditto
2248	Basu, Sunil Kumar	Assistant, Bird, & Co	1-1, Clive Street	ditto
2249	Basu, Surendra Nath	Assistant, Martin & Co	12, Mission Row	ditto
2250	Basu. Surendra Nath	Clerk, Dalhousie Institute	34, Dalhousie Square	ditto
2251	Basu, Surendra Nath, No I	Clerk, C A O's Office, E I R	E I R House	ditto
2252	Basu, Surendra Nath, BL	Clerk, Health Department, Calcutta Corporation	79, Cornwallis Street	ditto

No.	Names.	Style or calling.	Residence or place of business.	Religion
2253	Basu, Suresh Chandra	Assistant, Accountant General's Office, Bengal	Treasury Buildings	Hindu
2254	Basu, Sushil Chandra, BSc	Assistant Foreman, Printing Office, Calcutta Corporation	Municipal Office	ditto
2255	Basu, Tajendra Nath	Assistant, Accounts Department, Calcutta Corporation	Municipal Office	ditto
2256	Basu, Umapada	Book-keeper, Balmer, Lawrie & Co, Ld	103, Clive Street	ditto
2257	Basu Ray, Bijaya Bhusan	Assistant Cashier, Sun Life of Canada	12, Dalhousie Square, East	ditto
2258	Basu, Ray Chaudhuri Pramathanath	Assistant, Commercial Intelligence Department	1, Council House Street	ditto
2259	Basu Ray Chaudhuri, Pramode K	R D Inspector, E B R	3, Koilaghat Street	ditto
2260	Batabyal, Banu Gopal	Clerk, Booking Section, Port Commissioners' Office	Strand Road	ditto
2261	Batabyal, Binode Bihari	Assistant, Mackinnon, Mackenzie & Co	16, Strand Road	ditto
2262	Batabyal, Hari Prasad	Clerk, D A G P & T Office	7, Koilaghat Street	ditto
2263	Batabyal, Narendra Nath	Audit Inspector, Port Commissioners' Office	Strand Road	ditto
2264	Bera, Janaki Nath	Cashier, Calcutta University	Senate House	ditto
2265	Bhadra, Birendra Krishna, BA	Programme Assistant, All India Radio	1, Garstin Place	ditto
2266	Bhadra, Fatik Chandra	Clerk, D A G P & T Office	7, Koilaghat Street	ditto
2267	Bhadra, Hari Sadhan	Clerk, D A G P & T Office	7, Koilaghat Street	ditto
2268	Bhadra, Kaushiki Chandra	Accounts Clerk, E B R	3, Koilaghat Street	ditto
2269	Bhadra, Pramatha Nath	Clerk, D A G P & T Office	7, Koilaghat Street	ditto
2270	Bhadra, Satish Chandra	Clerk, D A G P & T Office	7, Koilaghat Street	ditto
2271	Bhadra, Shachindra Kumar	Assistant, Nestles and Anglo-Swiss Condensed Milk (Export) Co, Ld.	9-A, Clive Street	ditto
2272	Bhadra Shibendra Nath	Clerk, D A G P & T Office	7, Koilaghat Street	ditto

2273	Bhaduri, Dwijendra Lal, BSc	Demonstrator, Vidyasagar College	39, Shankar Ghose Lane	ditto
2274	Bhaduri, Nilmani, BA	Examiner of Stores, Indian Stores Department (Inspection)	6, Esplanade, East	ditto
2275	Bhaduri, Rajani Kanta	Accountant, W Billinton & Co, Ld	Stephen House	ditto
2276	Bhaduri, Sushilchandra	Sub-Head, C A O's Office, E I R	E I R House	ditto
2277	Bhaduri Tamal, BSc	Clerk, D A G P & T Office	7, Koilaghat Street	ditto
2278	Bhaduri, Upendra Nath	Assistant, Presidency College	86-1, College Street	ditto
2279	Bhagwat, Sakharam Hari, BA	Assistant, Tata Iron & Steel Co, Ld	100, Clive Street	ditto
2280	Bhandari, Amulya Ratan	Assistant, Reserve Bank of India	8, Council House Street	ditto
2281	Bhanja, Murari Mohan	Clerk, Martin Co	12, Mission Row	ditto
2282	Bhar, Akhil Chandra	Assistant, Macmillan & Co, Ld	294, Bowbazar Street	ditto
2283	Bhar, Amulya Krishna	Clerk, Collection Department, Calcutta Corporation	Municipal Office	ditto
2284	Bhar, Bhavataran	Assistant, Bengal Secretariat, Appointment Department	Writers' Buildings	Brahmo
2285	Bhar, Bijaya Krishna	Assistant, Surgeon-General's Office, Bengal	Writers' Buildings	Hindu
2286	Bhar, Chandra Bhusan	Assistant, Income-tax Office	3, Government Place, West	ditto
2287	Bhar, Debendra Nath	Salesman, English Electric Co, Ld	D-4, Clive Buildings	ditto
2288	Bhar, Gobinda Chandra, BA	Clerk, Dy Accountant-General, Posts & Telegraphs Office	7, Koilaghat Street	ditto
2289	Bhar, Hari Gopal, MSc	Assistant, Adair Dutt & Co, Ld	5, Dalhousie Square	ditto
2290	Bhar, H M	Engineer, Talbot & Co	Tower House, Chowringhee Square	ditto
2291	Bhar, Jitendra Mohan	Book-keeper, Balmer, Lawrie & Co, Ld	103, Clive Street	ditto
2292	Bhar, Kiran Chandra	Clerk, Union Insurance Society of Canton, Ld	8, Clive Street	ditto

No.	Names.	Style or calling	Residence or place of business.	Religion.
2293	Bhar, Manmatha Nath	Clerk, Shaw Wallace & Co	4, Bankshall Street	Hindu
2294	Bhar, Panna Lal	Clerk, Shaw Wallace & Co	4, Bankshall Street	ditto
2295	Bhar, Purna Chandra	Assistant, Balmer, Lawrie & Co, Ld	103, Clive Street	ditto
2296	Bhar, Surendra Nath	Salesman, English Electric Co, Ld	D-4, Clive Buildings	ditto
2297	Bhar, Tarapada	Assistant, Office of the Controller of Currency	Treasury Buildings	ditto
2298	Bharucha, P N	Assistant, Agency Deptt, Grahams Trading Co (India), Ld	6, Lyons Range	ditto
2299	Bhat, Yeshwant Abaji, BCom	Assistant, Tata Iron & Steel Co, Ld	100, Clive Street	ditto
2300	Bhatia, D D	Reporter, P & O Banking Corporation, Ld	1, Fairlie Place	ditto
2301	Bhattacharji, Ahi Bhusan	Clerk, D A G P & T Office	7, Koilaghat Street	ditto
2302	Bhattacharji, Akshaya Kr, BSc	Clerk, Telegraph Check Office	33, Dalhousie Square, South	ditto
2303	Bhattacharji, Amar Nath	Assistant, Imperial Chemical Industries (India), Ld	18, Strand Road	ditto
2304	Bhattacharji, Amulya Charan, BA	Clerk, D A G P & T Office	7, Koilaghat Street	ditto
2305	Bhattacharji, Amulya Ch	Eng Overseer, Calcutta Corporation, District I	79, Cornwallis Street	ditto
2306	Bhattacharji, Amulya Kumar	Surveyor and Valuer, Land Acquisition Office	5, Bankshall Street	ditto

2307	Bhattacharji, Ananta Charan	Assistant, Accountant-General's Office, Bengal	Treasury Buildings	ditto
2308	Bhattacharji, Anil Kumar	Assistant, Bengal Secretariat, Finance Department	Writers' Buildings	ditto
2309	Bhattacharji, Anurup Chandra	Assistant, Accountant-General's Office, Bengal	Treasury Buildings	ditto
2310	Bhattacharji, Ardhendu	Assistant, Reserve Bank of India	8, Council House Street	ditto
2311	Bhattacharji, Ashutos	Clerk, Telegraph Check Office	33, Dalhousie Square, South	ditto
2312	Bhattacharji, Ashutos	Clerk, Shaw, Wallace & Co	4, Bankshall Street	ditto
2313	Bhattacharji, Ashutos, BA	Assistant, Calcutta University	Senate House	ditto
2314	Bhattacharji, Barada Kumar, BA	Assessor, Income-tax Office	3, Government Place, West	ditto
2315	Bhattacharji, B B	Assistant, Heatly & Gresham, Ld	6, Waterloo Street	ditto
2316	Bhattacharji, Bhabadeb, BSc	Assistant, Accountant-General's Office, Bengal	Treasury Buildings	ditto
2317	Bhattacharji, Bibhuti Bhusan	Clerk, C O P S Office, E I R	E I R House	ditto
2318	Bhattacharji, Bibhuti Bhusan	Assistant, Bird & Co	1-1, Clive Street	ditto
2319	Bhattacharji, Bhudhar Ch, MA	Lecturer, Ripon College	24, Harrison Road	ditto
2320	Bhattacharji, Bhupendra Nath	Head Clerk (Marine), Commercial Union Assurance Co, Ld	32, Dalhousie Square	ditto
2321	Bhattacharji, Bijaya K	Store-keeper, Calcutta Improvement Trust	5, Clive Street	ditto
2322	Bhattacharji, Bijaya Mohan, MA	Teacher, Ripon Collegiate School	24, Harrison Road	ditto
2323	Bhattacharji, B N	Assistant, Manton & Co	13, Old Court House Street	ditto
2324	Bhattacharji, Birendra Nath	Assistant, Balmer, Lawrie & Co, Ld	103, Clive Street	ditto
2325	Bhattacharji, Birendra Nath	Clerk, D A G P & T Office	7, Koilaghat Street	ditto

No	Names.	Style or calling.	Residence or place of business.	Religion.
2326	Bhattacharji, Brahmeswar, MA	Assistant, Calcutta University	Senate House	Hindu
2327	Bhattacharji, Brajendra Nath	Audit Clerk, Ray & Ray	6, Church Lane	ditto
2328	Bhattacharji, Byomkesh, BA	Clerk, Army Factory Accounts	6. Esplanade, East	ditto
2329	Bhattacharji, Chaitanya	Sub-Head, Accounts Office, E B R	3, Kaylaghat Street	ditto
2330	Bhattacharji, Chandi Charan, BA	Clerk, D A G P & T Office	7, Koilaghat Street	ditto
2331	Bhattacharji, Charu Chandra, MSc	Assistant, Commercial Intelligence Department, India	1, Council House Street	ditto
2332	Bhattacharji, Charu Ch	Clerk, Telegraph Check Office	33, Dalhousie Square, South	ditto
2333	Bhattacharji, D, MRPS	Assistant, Bourne & Shepherd	141, Corporation Street	ditto
2334	Bhattacharji, Debendra Nath	Clerk, C C M's Office, E I R	E I R House	ditto
2335	Bhattacharji, Dhirendra Nath	Clerk, Indo Burma Petroleum Co, Ld	8, Clive Street	ditto
2336	Bhattacharji, Dhirendra Nath, MA	Clerk, Chief Auditor's Office, E I R	E I R House	ditto
2337	Bhattacharji, Dhirendra Nath	Travelling Representative, Butterworth & Co (India), Ld	Chowringhee Square	ditto
2338	Bhattacharji, Dinesh Chandra, MA	Lecturer, Sanskrit College	College Square	ditto
2339	Bhattacharji, Durgadas	Clerk, Agency Deptt, E B R	3, Kaylaghat Street	ditto
2340	Bhattacharji, Durgapada	Assistant, Accountant-General's Office, Bengal	Treasury Buildings	ditto
2341	Bhattacharji, Dwijendra Nath	Clerk, C C M's Office, E I R	E I R House	ditto
2342	Bhattacharji, Dwijendra Nath	Clerk, Botanical Survey of India	Indian Museum	ditto
2343	Bhattacharji, Girija Bh	Clerk, Telegraph Check Office	33, Dalhousie Square, South	ditto
2344	Bhattacharji, Gopal Chandra, M A	Lecturer, Ripon College	24, Harrison Road	ditto
2345	Bhattacharji, Gopendra	Clerk, D A G P & T Office	7, Koilaghat Street	ditto

2346	Bhattacharji, Gopeshwar, BA	Clerk, D A G P & T Office	7, Koilaghat Street	ditto
2347	Bhattacharji, Hara Kamal	Assistant Estimator, Office of the Superintending Engineer, Presidency Circle, P W D.	Writers' Buildings	ditto
2348	Bhattacharji, Hari Charan (No I)	Clerk, Accountant-General's Office, Bengal	Treasury Buildings	ditto
2349	Bhattacharji, Hari Charan	Supervisor, P H D, Bengal	3, Charnock Place	ditto
2350	Bhattacharji, Haridas, MA	Assistant, Accountant-General's Office, Bengal	Treasury Buildings	ditto
2351	Bhattacharji, Harideb	Code Clerk, Geo Henderson & Co, Ld	101-1, Clive Street	ditto
2352	Bhattacharji, Haripada	Accounts Clerk, E B R	3, Koilaghat Street	ditto
2353	Bhattacharji, Haripada, MA, BT	Assistant Master, Hindu School	College Square	ditto
2354	Bhattacharji, Haripada	Assistant, Commercial Intelligence Department	1, Council House Street	ditto
2355	Bhattacharji, Hemanta Kumar, BA	2nd Head Assistant, Bengal Secretariat, Budget Branch	Writers' Buildings	ditto
2356	Bhattacharji, Hem Chandra, BSc	Manager, Banga Laxmi Soap Works	28, Pollock Street	ditto
2357	Bhattacharji, Hem Chandra	Clerk, Book-Section, Port Commissioners' Office	Strand Road	ditto
2358	Bhattacharji, Hrishikesh, MA	Clerk, D A G P & T Office	7, Koilaghat Street	ditto
2359	Bhattacharji, J, BSc, BE CE	Assistant, Holmes, Wilson & Co, Ld	Norton Building	ditto
2360	Bhattacharji, Jamini Kumar	Assistant, Superintending Engineer's Office, S W Circle, P W D	Treasury Buildings	ditto
2361	Bhattacharji, Janakiballav, MA	Lecturer, Ripon College	24, Harrison Road	ditto
2362	Bhattacharji, Janardan, BA	Clerk, Assessor's Department, Calcutta Corporation	Municipal office	ditto
2363	Bhattacharji, Jatindra Nath, BSc	Clerk, D A G P & T Office	7, Koilaghat Street	ditto
2364	Bhattacharji, Jibesh Chandra	Correspondence Clerk, P H D, Bengal	3, Charnock Place	ditto
2365	Bhattacharji, Jitendra Nath	Assistant, Central Stationery Office	3, Church Lane	ditto
2366	Bhattacharji, Jitendra Nath, BA	Assistant, Calcutta University	Senate House	ditto
2367	Bhattacharji, Jnanendranath, MA	Teacher, Ripon College School	24, Harrison Road	ditto

No.	Names.	Style or calling.	Residence or place of business.	Religion.
2368	Bhattacharji, Kalidas	Shipping Clerk, Stewarts and Lloyds, Ld	6, Royal Exchange Place	Hindu
2369	Bhattacharji, Kali Kumar	Book-Keeper, Harrisons and Crosfield, Ld	6, Church Lane	ditto
2370	Bhattacharji, Kalipada, MA	Librarian, Sanskrit College	College Square	ditto
2371	Bhattacharji, Kamakhya Charan, BA	Assistant, Accountant-General's Office, Bengal	Treasury Buildings	ditto
2372	Bhattacharji, Kartik Chandra	Estimator, Office of the Executive Engineer, City Division, P W D.	Writers' Buildings	ditto
2373	Bhattacharji, K D	Assistant, Barry & Co	2, Fairlie Place	ditto
2374	Bhattacharji, Keshab Chandra	Assistant, Accountant-General's Office, Bengal	Treasury Buildings	ditto
2375	Bhattacharji, Khagendra Nath	Clerk, Burmah Shell Co of India, Ld	Hongkong House	ditto
2376	Bhattacharji, Kirti Bhusan	Clerk, C C M's Office, E I R	E I R House	ditto
2377	Bhattacharji, Krishna Chandra	Assistant, Bengal Secretariat, Political Department	Writers' Buildings	ditto
2378	Bhattacharji, Krishna Hari	Assistant, Indian Stores Department (Inspection)	6, Esplanade, East	ditto
2379	Bhattacharji, Krishna Kumar	Clerk, D A G P & T Office	7, Koilaghat Street	ditto
2380	Bhattacharji, Krishna Nath	Assistant, Excise Commissioner's Office, Bengal	Writers' Buildings	ditto
2381	Bhattacharji, Kshetra Mohan	Assistant, Office of the Director of Public Health, Bengal	Writers' Buildings	ditto
2382	Bhattacharji, Kshirode Kumar	Accountant, Ex Engineer's Office, Canals Division	Treasury Buildings	ditto
2383	Bhattacharji, Kshitindra, BSc	Assistant, National Insurance Co, Ld	7, Council House Street	ditto
2384	Bhattacharji, Kumud Kanta, BA	Assistant, Calcutta University	Senate House	ditto
2385	Bhattacharji, Kumudini Kanta, BA	Assistant, Accountant-General's Office, Bengal	Treasury Buildings	ditto
2386	Bhattacharji, Lal Mohan	Clerk, D A G P & T Office	7, Koilaghat Street	ditto
2387	Bhattacharji, Lalit Mohan	Clerk, D A G P & T Office	7, Koilaghat Street	ditto

2388	Bhattacharji, Madhusudan	Clerk, Burmah Shell Co of India, Ld	Hongkong House	ditto
2389	Bhattacharji, Mahadev, BA	Assistant, Accountant-General's Office, Bengal	Treasury Buildings	ditto
2390	Bhattacharji, Mahesh Chandra, MSc	Joint Accountant, Unique Assurance Co, Ld	10, Canning Street	ditto
2391	Bhattacharji, Manabendra N	Clerk, Telegraph Check Office	33, Dalhousie Square, South	ditto
2392	Bhattacharji, Manaranjan	Clerk, C A O's Office, E I R	E I R House	ditto
2393	Bhattacharji, Manaranjan, MA	Lecturer, Ripon College	24, Harrison Road	ditto
2394	Bhattacharji, Manaranjan, BA	Assistant, Accountant-General's Office, Bengal	Treasury Buildings	ditto
2395	Bhattacharji, Mritunjoy, M A	Assessing Inspector, Calcutta Corporation	Municipal Office	ditto
2396	Bhattacharji, N	Office in-charge, A B D R & Co	25-B, Swallow Lane	ditto
2397	Bhattacharji, Nagendra Mohan, BA	Stenographer, Adair Dutt & Co, Ld	5, Dalhousie Square	ditto
2398	Bhattacharji, Nagendra Nath	Reader, Government of India Press	8, Hastings Street	ditto
2399	Bhattacharji, Nalendra Nath, BA	Assistant, Accountant-General's Office, Bengal	Treasury Buildings	ditto
2400	Bhattacharji, Nanda Lal, BE	Engineeering Supervisor, Calcutta Corporation, District I	79, Cornwallis Street	ditto
2401	Bhattacharji, Nilmadhab	Head Clerk, Eastern Federal Union Insurance Co, Ld	9, Clive Street	ditto
2402	Bhattachraji, Nirmal Ch	Clerk, Telegraph Check Office	33, Dalhousie Square, South	ditto
2403	Bhattacharji, Nitya Hari	Head Assistant, Birla Brothers, Ld	8, Royal Exchange Place	ditto
2404	Bhattacharji, Panchanan	Accounts Clerk, E B R	3, Koilaghat Street	ditto
2405	Bhattacharji, Panchugopal, BSc, BL	Demonstrator, Scottish Church College	4, Cornwallis Square	ditto
2406	Bhattacharji, Paresh Nath	Assistant, Accountant-General's Office, Bengal	Treasury Buildings	ditto
2407	Bhattacharji, Pashupati, BA	Assistant Curator, Registration, Map Record and Issue Office, Survey of India	13, Wood Street	ditto
2408	Bhattacharji, Patanjali, MA	Assistant, Bengali Translator's Office	Writers' Buildings	ditto

No.	Names.	Style or calling.	Residence or place of business.	Religion.
2409	Bhattacharji, Phani Bhushan ..	Clerk, Royal Insurance Co, Ld	26 & 27, Dalhousie Square ..	Hindu
2410	Bhattacharji, Prabodh Ch .	Stenographer, Army Factory Accounts	6, Esplanade, East	ditto
2411	Bhattacharji, Prabodh Chandra, MA, BT	Assistant Master, Sanskrit Collegiate School	College Square	ditto
2412	Bhattacharji, Prafulla Chandra, B A	S A S Clerk, Army Factory Accounts	6, Esplanade, East	ditto
2413	Bhattacharji, Prakash Chandra ..	Assistant, Brooke Bond (India), Ld	2, Metcalfe Street	ditto
2414	Bhattacharji, Pramatha Nath, MA, BT	Assistant Master, Hare School	87, College Street	ditto
2415	Bhattacharji, Pramatha Nath, BA ..	Clerk, D A G P & T Office	7, Koilaghat Street	ditto
2416	Bhattacharji, Pramatha Nath ..	Stenographer, Burmah Shell Co of India, Ld	Hongkong House	ditto
2417	Bhattacharji, Pramatha Nath ..	Reader, Government of India Press	8, Hastings Street	ditto
2418	Bhattacharji, Pravas Chandra ..	Assistant, Barry & Co	2, Fairlie Place	ditto
2419	Bhattacharji, Pravat Chandra	Assistant, Andrew Yule & Co, Ld	8, Clive Row	ditto
2420	Bhattacharji, Priyanath ..	Accountant, Lal Chand & Sons	76, Lower Circular Road	ditto
2421	Bhattacharji, Pulin Bihari ..	Assistant, Accountant-General's Office, Bengal	Treasury Buildings	ditto
2422	Bhattacharji, Radha Kishore, BSc	Clerk, D A G P & T Office	7, Koilaghat Street	ditto
2423	Bhattacharji, Rajani Kanta ..	Book-Keeper, Anderson Wright & Co	22, Strand Road	ditto
2424	Bhattacharji, Rakhal Chandra ..	Clerk, D A G P & T Office	7, Koilaghat Street	ditto
2425	Bhattacharji, Ram Chandra ..	Surveyor, Calcutta Improvement Trust	5, Clive Street	ditto
2426	Bhattacharji, Ram Hari ..	Jr Superintendent, Reserve Bank of India	8, Council House Street	ditto
2427	Bhattacharji, Ramendra Nath, MA	Head Clerk, Office of the Director of Public Instruction, Bengal	Writers' Buildings	ditto
2428	Bhattacharji, Ramesh Chandra, MSc	Lecturer, Ripon College	24, Harrison Road	ditto
2429	Bhattacharji, Ramhari ..	Assistant, Reserve Bank of India	8, Council House Street	ditto
2430	Bhattacharji, Ram Jiban ..	Clerk, D A G P & T Office	7, Koilaghat Street	ditto
2431	Bhattacharji, R R	Clerk, Office of Superintending Engineer, S W Circle ..	Treasury Buildings	ditto

2432	Bhattacharji, Ram Sadaya ..	Special Inspector, E B R	3, Kaylaghat Street	ditto
2433	Bhattacharji, Ranendra Nath ..	Cashier, Northern Assurance Co, Ld	7, Hare Street	ditto
2434	Bhattacharji, Rukmini Kanta, BA	Head Clerk, Indian Stores Department (Inspection) ..	6, Esplanade, East	ditto
2435	Bhattacharji, Sahayram, MA, BT ..	Asstt Master, Hindu School	1-B, College Square	ditto
2436	Bhattacharji, Sarat Kumar ..	Assistant, Bengal Chemical & Pharmaceutical Works, Ld ..	31, Chittaranjan Avenue South ..	ditto
2437	Bhattacharji, Saroj Kumar ..	Clerk, Dy Accountant-General, Posts & Telegraphs Office ..	7, Koilaghat Street	ditto
2438	Bhattacharji, Satinath ..	Assistant, Commercial Intelligence Deptt	1, Council House Street	ditto
2439	Bhattacharji, Satish Chandra ..	Assistant, Commercial Intelligence Deptt	1, Council House Street	ditto
2440	Bhattacharji, Satya Ranjan, MSc	Assistant, Accountant-General's Office, Bengal	Treasury Buildings	ditto
2441	Bhattacharji, Satya Sankar, BA ..	Assistant, Surveyor-General's Office	13, Wood Street	ditto
2442	Bhattacharji, Shailendra ..	Assistant, Accountant-General's Office, Bengal	Treasury Buildings	ditto
2443	Bhattacharji, Shaileshindu ..	Assistant, Accountant-General's Office, Bengal	Treasury Buildings	ditto
2444	Bhattacharji, Shaktikanta ..	Accountant & Cashier, Patent Office	1, Council House Street	ditto
2445	Bhattacharji, Shambu Sampat ..	R D Inspector, E B R	3, Koilaghat Street	ditto
2446	Bhattacharji, Sharat Chandra ..	Assistant Printer, *Statesman*, Ld	Statesman House	ditto
2447	Bhattacharji, Sharat Chandra ..	Assistant, Bird & Co	1-1, Clive Street	ditto
2448	Bhattacharji, Sharat Kumar ..	Clerk, D A G P & T Office	7, Koilaghat Street	ditto
2449	Bhattacharji, Shasanka Shekhar, BA, BT.	Head Master, Sanskrit Collegiate School	College Square	ditto
2450	Bhattacharji, Shashi Bhusan ..	Clerk, Cash and Pay Section, Port Commissioners' Office ..	Strand Road	ditto
2451	Bhattacharji, Shyamapada, BA ..	Assistant, Accountant-General's Office, Bengal	Treasury Buildings	ditto

No.	Names.	Style or calling.	Residence or place of business.	Religion.
2452	Bhattacharji, Shyamapada, BA	Assistant, Accounts Department, Calcutta Corporation	Municipal Office	Hindu
2453	Bhattacharji, Sitesh Chandra, BA	Offg Accountant, Accountant-General's Office, Bengal	Treasury Buildings	ditto
2454	Bhattacharji, S K	Assistant Bullion Keeper, Calcutta Mint	47, Strand Road	ditto
2455	Bhattacharji, S N	Assistant Bullion Keeper, Calcutta Mint	47, Strand Road	ditto
2456	Bhattacharji, Srinivas	Head clerk, Architectural Survey Eastern Circle	Indian Museum	ditto
2457	Bhattacharji, Subodh Chandra	Clerk, Royal Insurance Co, Ld	26 & 27, Dalhousie Square	ditto
2458	Bhattacharji, Sudhakar	Assistant, National Insurance Co, Ld	7, Council House Street	ditto
2459	Bhattacharji, Sudhir Kumar	Clerk, Burmah Shell Co of India, Ltd	Hongkong House	ditto
2460	Bhattacharji, Surendra Nath	Invoice Clerk, Geo Henderson & Co, Ld	101-1, Clive Street	ditto
2461	Bhattacharji, Surendra Nath	Assistant, Reserve Bank of India	8, Council House Street	ditto
2462	Bhattacharji, Surendra Nath	Assistant, Commercial Intelligence Department	1, Council House Street	ditto
2463	Bhattacharji, Surendra Nath	Assistant, Bengal Secretariat, Political Department	Writers' Buildings	ditto
2464	Bhattacharji, Surja Kumar	Store-keeper, Callender's Cable & Constn Co, Ld	2, Pollock Street	ditto
2465	Bhattacharji, Taraknath, BA	Assistant, Bengal Secretariat, Finance Department	Writers' Buildings	ditto
2466	Bhattacharji, Tarakdas	Stenographer, Burmah Shell Co of India, Ld	Hongkong House	ditto
2467	Bhattacharji, Tinkari	Clerk, Traffic Department, E B R	3, Kaylaghat Street	ditto
2468	Bhattacharji, Tulsi Charan	Assistant, Accountant-General's Office, Bengal	Treasury Buildings	ditto
2469	Bhawalka, Ram Kumar	Assistant, Andrew Yule & Co, Ld	8, Clive Row	ditto
2470	Bhowany, P K	Clerk, E B R	3, Koilaghat Street	ditto
2471	Bhowmic, Basanta Kumar	Lantern Lecturer, Education Deptt, Calcutta Corporation	Municipal Office	ditto
2472	Bhowmic, Nishi Kanta, MA	Clerk, D A G P & T Office	7, Koilaghat Street	ditto

2473	Bhowmic, Sajani Kanta, BA	Clerk, D A G P & T Office	7, Koilaghat Street		ditto
2474	Bhuia Mahamad Ali, BA	Clerk, C A's Office, E I R	E I R House		Mahomedan
2475	Bhuiyan, M, BA	Assistant, Art Press	20, British Indian Street		Hindu
2476	Bhuiyan, Upendra Nath	Assistant, Calcutta University	Senate House		ditto
2477	Bijapurkar, Govindrao	Assistant, The Eastern Bank, Ld	9, Clive Street		ditto
2478	Billimoria, D N	Assistant, Imperial Chemical Industries (India), Ld	18, Strand Road		Zoroastrian
2479	Billimoria, Khurshed R	Cashier, Central Bank of India, Ld	100, Clive Street		ditto
2480	Billimoria, Roosie Navroji	Assistant Sales Manager, Walford Transport, Ld	71-73, Park Street		ditto
2481	Bishayee, Pashupati	Assistant, Commercial Intelligence Department	1, Council House Street		Hindu
2482	Bishoyee, Triloke Chand	Staff Assistant, Imperial Bank of India	3, Strand Road		ditto
2483	Bisi, Pramathanath, MA	Lecturer, Ripon College	24, Harrison Road		ditto
2484	Biswas, Abhaya Kumar	Assistant Salesman, Greaves, Cotton & Co, Ld	60, Dharamtola Street		Christian
2485	Biswas, A N	Clerk, Remington Rand, Inc	3, Council House Street		Hindu
2486	Biswas, Balai Chandra	Head Clerk, Imperial Bank of India	3, Strand Road		ditto
2487	Biswas, Basudev	Clerk, Calcutta Improvement Trust	5, Clive Street		ditto
2488	Biswas, Bhola Nath	Clerk, D A G P & T Office	7, Koilaghat Street		ditto
2489	Biswas, Bhupendra Kumar	Clerk, Agent's Office, E B R	3, Kaylaghat Street		ditto
2490	Biswas, Bhupendra Nath	Assistant, Reserve Bank of India	8, Council House Street		ditto
2491	Biswas, Bijaya Gopal	Assistant, Calcutta University	Senate House		ditto
2492	Biswas, Bijon Kumar	Assistant, James, Finlay & Co, Ld	1, Clive Street		ditto
2493	Biswas, Bimalendu, BA	Clerk, D A G P & T Office	7, Koilaghat Street		ditto

No.	Names.	Style or calling.	Residence or place of business.	Religion.
2494	Biswas, Dhirendra Nath, BSc	Assistant, Commercial Intelligence Department, India	1, Council House Street	Hindu
2495	Biswas, Dinabandhu	Assistant, Mercantile Marine Department	15-1, Strand Road	ditto
2496	Biswas, Gagan Chandra	Clerk, D A G P & T Office	7, Koilaghat Street	ditto
2497	Biswas, Hari Bhusan	Assistant, Office of the Inspector-General of Prisons, Bengal	Writers' Buildings	ditto
2498	Biswas, Haripada, BAI	Clerk, D A G P & T Office	7, Koilaghat Street	ditto
2499	Biswas, Hem Chandra	Accountant, Reed, Ward & Co	6, Lyons Range	ditto
2500	Biswas, Hemanta Kumar	Clerk, Treasury Department, Calcutta Corporation	Municipal Office	ditto
2501	Biswas, Hirendra Nath	Assistant, Commercial Intelligence Deptt	1, Council House Street	ditto
2502	Biswas, Jamini Kanta	Assistant, Accountant-General's Office, Bengal	Treasury Buildings	ditto
2503	Biswas, Jatindra Nath	Clerk, Marine Department, South British Insurance Co, Ld	5, Clive Street	ditto
2504	Biswas, Jatindra Nath	Clerk, D A G P & T Office	7, Koilaghat Street	ditto
2505	Biswas, J D	Clerk, Jardine, Skinner & Co	4, Clive Row	Christian
2506	Biswas, Jogendra Nath	Clerk, C A O's Office, E I R	E I R House	Hindu
2507	Biswas, Jogesh Chandra	Cashier, Sinclair, Murray & Co, Ld	6, Royal Exchange Place	ditto
2508	Biswas, Kalipada, MA	Assistant, Office of the Controller of Currency	Treasury Buildings	ditto
2509	Biswas, Kartic Chandra	Assistant, Accountant-General's Office, Bengal	Treasury Buildings	ditto
2510	Biswas, Krishna Chandra, MA	Assessing Officer, Calcutta Corporation	Municipal Office	ditto
2511	Biswas, Manindra Lal	Chief Store-Keeper (Photo-Litho), Survey of India	14, Wood Street	Christian
2512	Biswas, M L	Assistant, Mackinnon, Mackenzie & Co	8, Strand Road	ditto
2513	Biswas, Mohini Mohan	Clerk, American Express Co, Inc	14, Government Place, East	Hindu

2514	Biswas, M R	Secretary, Boys' Branch, Y M C A	86, College Street	Christian
2515	Biswas, Nagendra Chandra	Assistant, Martin & Co	12, Mission Row	Hindu
2516	Biswas, Phani Bhusan	Accounts Clerk, E B R	3, Koilaghat Street	ditto
2517	Biswas, Prafulla Kumar	Clerk, Jardine, Skinner & Co	4, Clive Row	Christian
2518	Biswas, Prakash Chandra, BA	Assessing Inspector, Calcutta Corporation	Municipal Office	Hindu
2519	Biswas, Pramode Bandhu	Clerk, Traffic Deptt, E B R	3, Koilaghat Street	ditto
2520	Biswas, Pulin Bihari	Clerk, C A's Office, E I R	E I R House	ditto
2521	Biswas, Rabindra Nath	Assistant, Moran & Co, Ld	4, Lyons Range	ditto
2522	Biswas, Ramesh Chandra	Assistant, Octavius, Steel & Co, Ld	14, Old Court House Street	ditto
2523	Biswas, Sanat K, BCom	Clerk, D A G P & T Office	7, Koilaghat Street	ditto
2524	Biswas, Sanyasi Charan	Clerk, Surveyor General's Office	13, Wood Street	ditto
2525	Biswas, Saroj Kumar	Clerk, Telegraph Check Office	33, Dalhousie Square, South	ditto
2526	Biswas, Saroj Nath, BA	Assistant, Accounts Department, Calcutta Corporation	Municipal Office	ditto
2527	Biswas, Satish Chandra	Assistant, Macneill & Co	2, Fairlie Place	ditto
2528	Biswas, Satya Ranjan	Assistant, Accountant-General's Office, Bengal	Treasury Buildings	ditto
2529	Biswas, Satya Ranjan	Assistant, Bird & Co	1-1, Clive Street	ditto
2530	Biswas, Shachindra Nath	Assistant, Moran & Co, Ld	4, Lyons Range	ditto
2531	Biswas, Shailendra Nath, BA	Assistant, Calcutta University	Senate House	ditto
2532	Biswas, Shashi Bhusan	Clerk, D A G P & T Office	7, Koilaghat Street	ditto
2533	Biswas, Shashi Bhusan	Examiner of Stores, Indian Stores Department (Inspection)	6, Esplanade, East	ditto

No.	Names.	Style or calling.	Residence or place of business.	Religion.
2534	Biswas, Shashi Bhusan	Assistant, Brooke Bond (India), Ld	2, Metcalfe Street	Hindu
2535	Biswas, S N	Stenographer, Reed, Ward & Co	6, Lyons Range	ditto
2536	Biswas, S N	Assistant, Guest, Keen, Williams, Ld	7, Council House Street	ditto
2537	Biswas, Subodh Chandra, BA	Assistant Accountant, Lighting, Calcutta Corporation	Municipal Office	ditto
2538	Biswas, T	Assistant, Mackinnon, Mackenzie & Co	16, Strand Road	Christian
2539	Biswas, Tarak Nath	Clerk, D A G P & T Office	7, Koilaghat Street	Hindu
2540	Budhraj, A S	Claims Inspector, Traffic Deptt, E B R	3, Koilaghat Street	ditto
2541	Bux, Mowla (Sheikh)	Clerk, Accountant-General's Office, Bengal	Treasury Buildings	Mahomedan
	C			
2542	Chakravarti, Abhaya Charan	Clerk, D A G P & T Office	7, Koilaghat Street	Hindu
2543	Chakravarti, Akshaya K	Clerk, Sun Life of Canada	12, Dalhousie Square, East	ditto
2544	Chakravarti, Akshaya Kumar	Assistant, Agri and Ind Department, Bengal	Writers' Buildings	ditto
2545	Chakravarti, Amrita Lal	Clerk, Turner, Morrison & Co, Ld	6, Lyons Range	ditto
2546	Chakravarti, Ananta Nath	Accounts Clerk, E B R	3, Koilaghat Street	ditto
2547	Chakravarti, Anath Bandhu	Clerk, Imperial Bank of India	3, Strand Road	ditto
2548	Chakravarti, Anil Kumar, MA	Assistant, Commercial Intelligence Department, India	1, Council House Street	ditto
2549	Chakravarti, Anukul Chandra	Assistant, Macneill & Co	2, Fairlie Place	ditto
2550	Chakravarti, Ashutos	Assistant, Senda & Co (India), Ld	135, Canning Street	ditto
2551	Chakravarti, B	Accountant, John, Dickinson & Co, Ld	6, Clive Row	ditto
2552	Chakravarti, Bhabendra Nath	Chief Clerk, Martin & Co	12, Mission Row	ditto

2553	Chakravarti, Bhuban Mohan	Assistant, Office of the Director of Public Health, Bengal	Writers' Buildings	ditto
2554	Chakravarti, Bhuban Mohan	Assistant, Accountant-General's Office, Bengal	Treasury Buildings	ditto
2555	Chakravarti, Bhupati Charan	Assistant, Balmer, Lawrie & Co, Ld	103, Clive Street	ditto
2556	Chakravarti, Bhupati Nath	Assistant, Office of the Director of Public Instruction, Bengal	Writers' Buildings	ditto
2557	Chakravarti, Bhupendra Narayan	Assistant, Accounts Department, Calcutta Corporation	Municipal Office	ditto
2558	Chakravarti, Bhupendra Nath	Clerk, D A G P & T Office	7, Koilaghat Street	ditto
2559	Chakravarti, Bibhuti Bhusan, BE, CE	Engineer, Holmes, Wilson & Co, Ld	Norton Buildings	ditto
2560	Chakravarti, Bibhuti Bhusan, BL	Clerk, C E's Office, Calcutta Corporation	Municipal Office	ditto
2561	Chakravarti, Bidhu Bhusan	Assistant, Surgeon-General's Office, Bengal	Writers' Buildings	ditto
2562	Chakravarti, Bijaya Krishna	Assistant, Price, Waterhouse, Peat & Co	B-4, Clive Buildings	ditto
2563	Chakravarti, Chandranan	Clerk, D A G P & T Office	7, Koilaghat Street	ditto
2564	Chakravarti, Charu Chandra, MA	Teacher, Ripon Collegiate School	24, Harrison Road	ditto
2565	Chakravarti, Charu Chandra, BA	Assistant, Accountant-General's Office, Bengal	Treasury Buildings	ditto
2566	Chakravarti, Charu Chandra	Assistant, Ludlow Jute Co, Ld	7, Royal Exchange Place	ditto
2567	Chakravarti, Charu Chandra, BA	Assistant, Commercial Intelligence Department, India	1, Council House Street	ditto
2568	Chakravarti, Chintaharan, MA	Lecturer, Bethune College	181, Cornwallis Street	ditto
2569	Chakravarti, Dasarathi	Clerk, Telegraph Check Office	33, Dalhousie Square, South	ditto
2570	Chakravarti, Dharma Das	Head Clerk, Office of the Deputy Director of Agriculture, Western Circle, Bengal.	Writers' Buildings	ditto
2571	Chakravarti, Dharma Das B.A.	Clerk, D A G P & T Office	7, Koilaghat Street	ditto
2572	Chakravarti, Dukhiram	Sub-head, Accounts Office, E B R	3, Kaylaghat Street	ditto

No.	Names.	Style or calling.	Residence or place of business.	Religion.
2573	Chakravarti, Durga Charan	Clerk, D A G P & T Office	7, Koilaghat Street	Hindu
2574	Chakravarti, Durgadas	Assistant, Accounts Department, Calcutta Corporation	Municipal Office	ditto
2575	Chakravarti, Gopal Ch	Clerk, D A G P & T Office	7, Koilaghat Street	ditto
2576	Chakravarti, Gostha Bihari	Export Clerk, Lipton, Ld	9, Weston Street	ditto
2577	Chakravarti, Goswamidas	Assistant, Ludlow Jute Co, Ld	7, Royal Exchange Place	ditto
2578	Chakravarti, Hari Charan	License Inspector, Calcutta Corporation	Municipal Office	ditto
2579	Chakravarti, Hari Mohan	Clerk, D A G P & T Office	7, Koilaghat Street	ditto
2580	Chakravarti, Harisadhan	Assistant, Accountant-General's Office, Bengal	Treasury Buildings	ditto
2581	Chakravarti, Hemendra Nath	Surveyor, Calcutta Improvement Trust	5, Clive Street	ditto
2582	Chakravarti, Hirendranath	Assistant. Excise Commissioner's Office, Bengal	Writers' Buildings	ditto
2583	Chakravarti, H N	Clerk, C E S C, Ld	Victoria House	ditto
2584	Chakravarti, H N	Clerk. D A G P & T Office	7, Koilaghat Street	ditto
2585	Chakravarti, Indra Mohan, BA	Assistant, Accountant-General's Office, Bengal	Treasury Buildings	ditto
2586	Chakravarti, Jatindra Chandra	Salesman, Hoare, Miller & Co, Ld	5, Fairlie Place	ditto
2587	Chakravarti, Jaya Gopal	Assistant, Mercantile Marine Department	15-1, Strand Road	ditto
2588	Chakravarti, Jibaneshwar, MA	Divisional Accountant, Accountant-General's Office, Bengal	Treasury Buildings	ditto
2589	Chakravarti, Jitendra Kumar	Lecturer, Sanskrit College	College Square	ditto
2590	Chakravarti, Jitendra Nath	Clerk, C A O's Office, E I R	E I R House	ditto
2591	Chakravarti, Jitendra, BA	Assessor, Income-tax Office	3, Government Place, West	ditto

2592	Chakravarti, Jitendra Nath	Surveyor and Valuer, Land Acquisition Office	5, Bankshall Street	ditto
2593	Chakravarti, Jnanendra Nath	Clerk, Telegaph Check Office	33, Dalhousie Square, South	ditto
2594	Chakravarti, Jugal Kishore	Clerk, Imperial Bank of India	3, Strand Road	ditto
2595	Chakravarti, Jyotish Chandra, BA	Assistant, Board of Revenue, Bengal	Writers' Buildings	ditto
2596	Chakravarti, Jyotish Chandra, BA	Clerk, Telegraph Check Office	33, Dalhousie Square, South	ditto
2597	Chakravarti, Jyotish Chandra	Building Inspector, Calcutta Corporation	Municipal Office	ditto
2598	Chakravarti, Kailas Chandra	Demonstrator, Presidency College	86-1, College Street	ditto
2599	Chakravarti, Kalachand	Clerk, Agent's Office, E I R	E I R House	ditto
2600	Chakravarti, Kalipada	Clerk, Martin & Co	12, Mission Row	ditto
2601	Chakravarti, Kalipada	Clerk, Burmah Shell Co of India, Ld	Hongkong House	ditto
2602	Chakravarti, Kalipada	Stenographer, Hoare, Miller & Co, Ld	5, Fairlie Place	ditto
2603	Chakravarti, Kaliprasad	Clerk, Imperial Bank of India	3, Strand Road	ditto
2604	Chakravarti, Kanailal	Clerk, Martin & Co	12, Mission Row	ditto
2605	Chakravarti, Kripasindhu	Assistant, Price, Waterhouse, Peat & Co	B-4, Clive Buildings	ditto
2606	Chakravarti, Kshtitish Ch	Accountant, Presidency College	86-1, College Street	ditto
2607	Chakravarti, Lakshmi Narayan	Clerk, Harrisons and Crosfield, Ld	6, Church Lane	ditto
2608	Chakravarti, Mahendranath	Assistant, J Thomas & Co	8, Mission Row	ditto
2609	Chakravarti, Makhan Lal	Head Clerk, Income-tax Office	1, Hare Street	ditto
2610	Chakravarti, Makhan Lal	Assistant, Accountant-General's Office, Bengal	Treasury Buildings	ditto
2611	Chakravarti, Mani Mohan, BSc	Assistant, Accountant-General's Office, Bengal	Treasury Buildings	ditto

No.	Names.	Style or calling.	Residence or place of business.	Religion.
2612	Chakravarti, Manindra Mohan	Assistant, Bengal Secretariat, Marine Department	Writers' Buildings	Hindu
2613	Chakravarti, Manmatha Nath	Accountant, Begg, Dunlop & Co, Ld	2, Hare Street	ditto
2614	Chakravarti, Matilal, BA	Assistant, Office of the I-G of Police	Writers' Buildings	ditto
2615	Chakravarti, Mrityunjaya	Sub-Head, C A O's Office, E I R	E I R House	ditto
2616	Chakravarti, Mrityunjaya	Assistant, Government of India Press	8, Hastings Street	ditto
2617	Chakravarti, N C, MA	Lecturer, Govt Commercial Institute	11, Hastings Street	ditto
2618	Chakravarti, Nagendra Nath	Accountant, Norwich Union Fire Insurance Society, Ld	8, Old Court House Street	ditto
2619	Chakravarti, Nagendra Nath	Clerk, C O S's Office, E I R	E I R House	ditto
2620	Chakravarti, Nanda Lal	Clerk, Burmah Shell Co of India, Ld	Hongkong House	ditto
2621	Chakravarti, Nani Gopal	Demonstrator, Presidency College	86-1, College Street	ditto
2622	Chakravarti, Nani Lal	Clerk, D A G P & T Office	7, Koilaghat Street	ditto
2623	Chakravarti, Nanilal	Assistant, Accountant-General's Office, Bengal	Treasury Buildings	ditto
2624	Chakravarti, Narendra Chandra	Outfall Leveller, Calcutta Corporation	Municipal Office	ditto
2625	Chakravarti, Narendra N	Clerk, Telegraph Check Office	33, Dalhousie Square, South	ditto
2626	Chakravarti, Nemai Charan, BA	Assistant, Accountant-General's Office, Bengal	Treasury Buildings	ditto
2627	Chakravarti, Nilmani	Assistant, Accountant-General's Office, Bengal	Treasury Buildings	ditto
2628	Chakravarti, Niramaya, BL	Assistant, Accountant-General's Office, Bengal	Treasury Buildings	ditto
2629	Chakravarti, Nirmal Chandra	Security Clerk, National Bank of India, Ld	104, Clive Street	ditto
2630	Chakravarti, Nishi Bhusan	Assistant, Office of the Inspector-General of Prisons, Bengal	Writers' Buildings	ditto

2631	Chakravarti, Nishi Kanta	Clerk, D A G P & T Office	7, Koilaghat Street	ditto
2632	Chakravarti, N N	Assistant, Barry & Co	2, Fairlie Place	ditto
2633	Chakravarti, Nripendra Kumar	Assistant, Accountant-General's Office, Bengal	Treasury Buildings	ditto
2634	Chakravarti, Nrittya Gopal	Clerk, Burmah Shell Co of India, Ld	Hongkong House	ditto
2635	Chakravarti, Panchanan	Assistant, Bird & Co	1-1, Clive Street	ditto
2636	Chakravarti, Pashupati	Clerk, Calcutta Improvement Trust	5, Clive Street	ditto
2637	Chakravarti, Paresh Chandra, BA	Stenographer, Talbot & Co	Tower House	ditto
2638	Chakravarti, Phani Bhusan, BE	Overseer, Calcutta Improvement Trust	5, Clive Street	ditto
2639	Chakravarti, Prabodh Chandra, MSc	Assistant Accountant-Generals Office, Bengal,	Treasury Buildings	ditto
2640	Chakravarti, Prabodh Chandra	Clerk, Burmah Shell Co of India, Ld	Hongkong House	ditto
2641	Chakravarti, Prafulla Chandra	Clerk, Agent's Office, E I R	E I R House	ditto
2642	Chakravarti, Prafulla Kumar	Stenographer, Burmah Shell Co of India, Ld	Hongkong House	ditto
2643	Chakravarti, Prafulla Kumar	Head Clerk, Traffic Department, E B R	3, Kaylaghat Street	ditto
2644	Chakravarti, Pramatha Mohan	Assistant, Office of the Director of Public Health, Bengal	Writers' Buildings	ditto
2645	Chakravarti, Pran Krishna	Clerk, D A G P & T Office	7, Koilaghat Street	ditto
2646	Chakravarti, Pravat Chandra	Assistant, Office of the Director of Industries, Bengal	40-1A, Free School Street	ditto
2647	Chakravarti, Purna Chandra	Accountant, Begg, Dunlop & Co, Ld	2, Hare Street	ditto
2648	Chakravarti, Purna Chandra	Assistant, Accountant-General's Office, Bengal	Treasury Buildings	ditto
2649	Chakravarti, Radhikaranjan	Assistant, Calcutta University	Senate House	ditto
2650	Chakravarti, R B	Clerk, Ford, Rhodes Thornton & Co	Tower House Chowringhee Square	ditto

No.	Names.	Style or calling.	Residence or place of business.	Religion.
2651	Chakravarti, Rajani Mohan, BL	Assessing Inspector, Calcutta Corporation	Municipal Office	Hindu
2652	Chakravarti, Rajendra Chandra, BA	Assistant, Board of Revenue, Bengal	Writers' Buildings	ditto
2653	Chakravarti, Rajendra Kumar	Head Clerk, Office of the Inspector of Schools, Presidency Division	40-1A, Free School Street	ditto
2654	Chakravati, Rajendra Nath, BA	Assistant, Martin & Co	12, Mission Row	ditto
2655	Chakravarti, Rajendra Nath	Clerk, Calcutta Improvement Trust	5, Clive Street	ditto
2656	Chakravarti, Ramani Mohan, BA	Stenographer, Bengali Translator's Office	Writers' Buildings	ditto
2657	Chakravarti, Ramaprasad	Assistant, Accountant-General's Office, Bengal	Treasury Buildings	ditto
2658	Chakravarti, Ramendra Nath	Head Assistant Teacher, Government School of Art, Calcutta	28, Chowringhee	ditto
2659	Chakravarti, Ramesh Chandra, BA	Assistant, Martin & Co	12, Mission Row	ditto
2660	Chakravarti, Rameshwar	Assistant, Burn & Co, Ld	12, Mission Row	ditto
2661	Chakravarti, Ramkrishna, MA	Assistant, Calcutta University	Senate House	ditto
2662	Chakravarti, Rasik Lal	Head Clerk, Income-tax Office	1, Hare Street	ditto
2663	Chakravarti, Rebati Raman	Cashier, Guaranteed Relief Syndicate, Ld	14, Clive Street	ditto
2664	Chakravarti, R R	Assistant, Oriental Government Security Life Assurance Co, Ld	2, Clive Row	ditto
2665	Chakravarti, Sanat Kumar	Assistant, Andrew Yule & Co, Ld	8, Clive Row	ditto
2666	Chakravarti, Sarat Chandra	Clerk, D A G P & T Office	7, Koilaghat Street	ditto
2667	Chakravarti, Satish Chandra	Accountant, Map Record & Issue Office, Survey of India	13, Wood Street	ditto
2668	Chakravarti, Satyaprasad	Assistant, Accountant-General's Office, Bengal	Treasury Buildings	ditto
2669	Chakravarti, Satyendra Nath	Sr Accountant, Accountant-General's Office, Bengal	Treasury Buildings	ditto

2670	Chakravarti, Sitangsu Shekhar	Asstt Superintendent, C O P S's Office, E I R	E I R House	ditto
2671	Chakravarti, Shitaldas, BA	Assistant. Accountant-General's Office, Bengal	Treasury Buildings	ditto
2672	Chakravarti, Shyamapada	Clerk, Traffic Department, E B R	3, Kaylaghat Street	ditto
2673	Chakravarti, Shyamapada, BSc	Assistant, Accountant-General's Office, Bengal	Treasury Buildings	ditto
2674	Chakravarti, Subodh Kumar, MSc	Professor, City College	102-1, Amherst Street	ditto
2675	Chakravarti, Sudhindra Nath BA	Clerk, D A G P & T Office	7, Koilaghat Street	ditto
2676	Chakravarti, Sudhir Chandra	Assistant. Begg, Dunlop & Co, Ld	2, Hare Street	ditto
2677	Chakravarti, Sudhirendu, BCom	Assistant, Accountant-General's Office, Bengal	Treasury Buildings	ditto
2678	Chakravarti, Surendra Nath	Surveyor and Valuer, Land Acquisition Office	5, Bankshall Street	ditto
2679	Chakravarti, Surendra Nath	Superintendent of Textile Demonstrations, Industries Department, Bengal.	40-1A, Free School Street	ditto
2680	Chakravarti, Taracharan	Assistant, Accountant-General's Office, Bengal	Treasury Buildings	ditto
2681	Chakravarti, Tara Kumar	Draftsman, No. I Drawing Office, Survey of India	13, Wood Street	ditto
2682	Chakravarti, Tarak Chandra	Traveller, Blackie & Sons (India), Ld	285-11, Bowbazar Street	ditto
2683	Chakravarti, Tarini Prasad, BA	Assistant, Accountant-General's Office, Bengal	Treasury Buildings	ditto
2684	Chakravarti, Triguna Ch, BA	Assistant, Govt of India Press	8, Hastings Street	ditto
2685	Chakravarti, Tulsi	Assistant, Paterson Engineering Co (India), Ld	2, Dalhousie Square	ditto
2686	Chakravarti, Uma Kali	Stenographer, Office of H.M's Trade Commissioner in India	4, Fairlie Place	ditto
2687	Chakravarti, Upendra Nath	Assistant, P & O Banking Corporation, Ld	1, Fairlie Place	ditto
2688	Chakravarti, Upendra Nath	Clerk, Elec & Mech, G E's Office, Calcutta Division, Fort William	Fort William	ditto
2689	Champati, Binode Bihari	Clerk, Accounts Office, E I R	E I R House	ditto

No.	Names.	Style or calling	Residence or place of business.	Religion.
2690	Chanda. Binode Bihari, BA	Assistant, Government of India Press	8, Hastings Street	Hindu
2691	Chanda, Tara Prasanna	Assistant, Accounts Deptt, Calcutta Corporation	Municipal Office	ditto
2692	Chandra, Amarendra Nath	Clerk, C A O's Office, E I R	E I R House	ditto
2693	Chandra, Ashutos	Assistant, Balmer, Lawrie & Co, Ld	103, Clive Street	ditto
2694	Chandra, Atul Krishna	Assistant, Reserve Bank of India	8, Council House Street	ditto
2695	Chandra, Balai Lal	Hd Assistant, Juggilal Kamlapat	76, Cotton Street	ditto
2696	Chandra, Bipin Krishna	Assistant, Accountant-General's Office, Bengal	Treasury Buildings	ditto
2697	Chandra, Gopal Chandra	Clerk, C A's Office, E I R	E I R House	ditto
2698	Chandra, Gour Hari	Assistant, Commercial Intelligence Deptt India	1, Council House Street	ditto
2699	Chandra, Haradhone BA	Clerk, D A G P & T Office	7, Koilaghat Street	ditto
2700	Chandra, Hari Krishna	Assistant Estate Superintendent, Port Commissioners' Office	Strand Road	ditto
2701	Chandra, Jatindra Mohan	Assistant, Reserve Bank of India	8, Council House Street	ditto
2702	Chandra, Kanailal	Clerk, Gillanders, Arbuthnot & Co	8, Clive Street	ditto
2703	Chandra, Manilal	Accountant, Scottish Church College	4, Cornwallis Square	Christian
2704	Chandra, Narendra Kumar	Accounts Clerk, E B R	3, Koilaghat Street	Hindu
2705	Chandra, Narendra Nath	Accountant, Phœnix Assurance Co, Ld	28, Dalhousie Square	ditto
2706	Chandra, Nityananda	Clerk, D A G P & T Office	7, Koilaghat Street	ditto
2707	Chandra, Rajendra Kumar	Clerk, Imperial Bank of India	3, Strand Road	ditto
2708	Chatarji, Abanikanta	Assistant, Public Health Department, Bengal	Writers' Buildings	ditto
2709	Chatarji, Aditya Narayan	Clerk, Jardine, Skinner & Co	4, Clive Row	ditto
2710	Chatarji, A K	Inspector, Oriental Govt Security Life Assurance Co, Ltd	2, Clive Row	ditto
2711	Chatarji, Akshaya Kumar	Staff clerk, Bengal Telephone Corporation, Limited	8, Hare Street	ditto

2712	Chatarji, Amal Pada	Building Inspector, Calcutta Corporation	Municipal Office	ditto
2713	Chatarji, Amarendra Nath	Assistant, Burn & Co, Ld	12, Mission Row	ditto
2714	Chatarji, Ambuj Lal	Assistant, Office of the Inspector-General of Registration, Bengal	Writers' Buildings	ditto
2715	Chatarji, Amulya Krishna	Assistant, Balmer, Lawrie & Co, Ld	103, Clive Street	ditto
2716	Chatarji, A N	Asstt Engineer, G E C (India), Ld	Magnet House, Central Avenue South	ditto
2717	Chatarji, Ashutos	Clerk, Burmah Shell Co of India, Ld	Hongkong House	ditto
2718	Chatarji, Ashutos	Assistant, Bengal Secretariat, Judicial Department	Writers' Buildings	ditto
2719	Chatarji, Ashwini Kumar	Clerk, Gillanders, Arbuthnot & Co	8, Clive Street	ditto
2720	Chatarji, Atul Krishna	Assistant, Bengal Chamber of Commerce	2, Clive Street	ditto
2721	Chatarji, Atul Krishna, BA	Accounts clerk, E B R	3, Koilaghat Strreet	ditto
2722	Chatarji, Baidya Nath, BA	Clerk, D A G P & T Office	7, Koilaghat Street	ditto
2723	Chatarji, B B	Assistant Resident Secretary, Manufacturers Life Insurance Co	26, Dalhousie Square	ditto
2724	Chatarji, Balai Chand	Clerk, Assessor's Department, Calcutta Corporation	Municipal Office	ditto
2725	Chatarji, Banbehary	Stenographer, Burmah Shell Co of India, Ld	Hongkong House	ditto
2726	Chatarji, Bankim Chandra (No. I)	Clerk, Engineer's Office, E B R	3, Kaylaghat Street	ditto
2727	Chatarji, Bankim Chandra	Assistant, Office of the I-G of Police	Writers' Buildings	ditto

No.	Names.	Style or calling.	Residence or place of business.	Religion.
2728	Chatarji, Barindra Nath, MSc	Food Inspector, Calcutta Corporation	79, Cornwallis Street	Hindu
2729	Chatarji, Basanta Kumar	Clerk, Burmah Shell Co of India, Ld	Hongkong House	ditto
2730	Chatarji, Basudeb	Assistant, Office of the Director of Industries, Bengal	40-1A, Free School Street	ditto
2731	Chatarji, Bhababhuti	Clerk, Telegraph Check Office	33, Dalhousie Square, South	ditto
2732	Chatarji, Bhabani Mohan, MA	Sub-Head, C A O's Office, E I R	E I R House	ditto
2733	Chatarji, Bhola Nath, BA	Assistant, Commercial Intelligence Deptt	1, Council House Street	ditto
2734	Chatarji, Bhubaneshwar	Assistant, Accountant-General's Office, Bengal	Treasury Buildings	ditto
2735	Chatarji, Bhupati Bhusan	Stenographer, Bengal Secretariat, Finance Department	Writers' Buildings	ditto
2736	Chatarji, Bhupati Nath	Stenographer, Zoological Survey of India	Indian Museum	ditto
2737	Chatarji, Bhupati Nath	Accounts Clerk, E B R	3, Koilaghat Street	ditto
2738	Chatarji, Bhupendra Nath	Inspector of Lightning Conductors, Superintending Engineer's Office, Electrical Circle, Bengal.	Writers' Buildings	ditto
2739	Chatarji, Bhupendra Nath	Stenographer, Bengal Secretariat, Finance Department	Writers' Buildings	ditto
2740	Chatarji, Bibhuti Bhusan	Clerk, Imperial Bank of India	3, Strand Road	ditto
2741	Chatarji, Bibhuti Bhusan	Assistant, Accountant-General's Office, Bengal	Treasury Buildings	ditto
2742	Chatarji, Bibhuti Bhusan	Accountant, Calcutta University	Senate House	ditto

2743	Chatarji, Bijaya Krishna	Sub-Head, Accounts Office, E B R	3, Kaylaghat Street	ditto
2744	Chatarji, Bijaya Krishna	Clerk, C. A O's Office, E I R	E I R House	ditto
2745	Chatarji, Bijaya Lal	Clerk, Telegraph Check Office	33, Dalhousie Square, South	ditto
2746	Chatarji, Binaya Krishna	Head Clerk, Ewing & Co, Ld	4, Clive Row	ditto
2747	Chatarji, Binaya Krishna	Assistant, Commercial Intelligence Department	1, Council House Street	ditto
2748	Chatarji, Bireswar, BA	Assistant (Legal), Sir Sarupchand Hukumchand & Co	30, Clive Street	ditto
2749	Chatarji, Bishweswar	Assistant, Mercantile Marine Department	15-1, Strand Road	ditto
2750	Chatarji, B N	Clerk, Calcutta Mint	47, Strand Road	ditto
2751	Chatarji, Chandicharan	Clerk, C C M's Office, E I R	E I R House	ditto
2752	Chatarji, Chandra Kanta	Cashier, Nestle & Anglo-Swiss Condensed Milk (Export) Co, Ld	9-A, Clive Street	ditto
2753	Chatarji, Charu Chandra	Clerk, Imperial Bank of India	3, Strand Road	ditto
2754	Chatarji, Chuni Lal	Clerk, Assessors' Department, Calcutta Corporation	Municipal Office	ditto
2755	Chatarji, Chuni Lal	Assistant, Bird & Co	1-1, Clive Street	ditto
2756	Chatarji, Dakshina Kumar	Clerk, Licensed Measurers Department	2, Clive Street	ditto
2757	Chatarji, Debendra Nath	Assistant, Nestle and Anglo-Swiss Condensed Milk (Export) Co, Ld.	9-A, Clive Street	ditto
2758	Chatarji, Debendra Nath	Clerk, Telegraph Check Office	33, Dalhousie Square, South	ditto

No.	Names.	Style or calling.	Residence or place of business.	Religion.
2759	Chatarji, Debendra Nath	Assistant, Calcutta University	Senate House	Hindu
2760	Chatarji, Dhirendra Nath	Assistant, Accountant-General's Office, Bengal	Treasury Buildings	ditto
2761	Chatarji, Dhirendra Nath, B com	Assistant, Office of the Controller of Currency	Treasury Buildings	ditto
2762	Chatarji, Dhirendra Nath	Supervisor, Mathematical Instrument Office	15, Wood Street	ditto
2763	Chatarji, Dhirendra Nath	Clerk, D A G P & T Office	7, Koilaghat Street	ditto
2764	Chatarji, Dhirendra Nath	Accountant, Paterson Engineering Co (India), Ld	2, Dalhousie Square	ditto
2765	Chatarji, Durgadas	Assistant, Andrew Yule & Co, Ld	8, Clive Row	ditto
2766	Chatarji, Durgadas	Assistant, N R Roy & Co	7, Lyons Range	ditto
2767	Chatarji, Dwijendra Nath	Head Clerk, W T Henley's Telegraph Works Co, Ld	Old Court House Corner	ditto
2768	Chatarji, Dyoti Nath	Assistant, Andrew Yule & Co, Ld	8, Clive Row	ditto
2769	Chatarji, Ganesh	Clerk, Ford, Rhodes, Thornton & Co	Tower House	ditto
2770	Chatarji, Ganesh Chandra	Clerk, C A O's Office, E I R	E I R House	ditto
2771	Chatarji, Girindra Mohan, BA	Clerk, Calcutta Corporation, D E I	79, Cornwallis Street	ditto
2772	Chatarji, Harendrakumar	Clerk, C O S's Office, E I R	E I R House	ditto
2773	Chatarji, Hareshwar	Clerk, D A G P & T Office	7, Koilaghat Street	ditto

2774	Chatarji, Haribilas	Assistant, Bengal Secretariat, Revenue Department	Writers' Buildings	ditto
2775	Chatarji, Haribilas	Eng. Overseer, Calcutta Corporation	79, Cornwallis Street	ditto
2776	Chatarji, Hari Charan	Assistant, Commercial Intelligence Department	1, Council House Street	ditto
2777	Chatarji, Haridhan	Assistant, Calcutta University	Senate House	ditto
2778	Chatarji, Haridhan	Assistant, Mackinnon, Mackenzie & Co	16, Strand Road	ditto
2779	Chatarji, Hari Gopal, MA	Assistant, Calcutta University	Senate House	ditto
2780	Chatarji, Harihar, BA	Assistant, Map Publication Office, Survey of India	13, Wood Street	ditto
2781	Chatarji, Haripada	Assessor, Income-tax Office	3, Government Place, West	ditto
2782	Chatarji, Haripada	Clerk, Royal Insurance Co, Ld	26 & 27, Dalhousie Square	ditto
2783	Chatarji, Haripada	Assistant, Accountant-General's Office, Bengal	Treasury Buildings	ditto
2784	Chatarji, Hari Santosh, BA	Clerk, Assessor's Department, Calcutta Corporation	Municipal Office	ditto
2785	Chatarji, Hemanta Kumar, BA	Assistant, Board of Revenue, Bengal	Writers' Buildings	ditto
2786	Chatarji, Hemendra Nath, MA, BL	Assistant, Calcutta University	Senate House	ditto
2787	Chatarji, Hirendra Nath	Head Clerk, Traffic Department, E B R	3, Kaylaghat Street	ditto
2788	Chatarji, Hirendra Nath, MA	Jr. Superintendent, Reserve Bank of India	8, Council House Street	ditto
2789	Chatarji, Hirendra Nath, BA	Assistant, Commercial Intelligence Department, India	1, Council House Street	ditto

No.	Names.	Style or calling.	Residence or place of business.	Religion.
2790	Chatarji, Hrisikesh ..	.. Assistant, Mackinnon, Mackenzie & Co ..	.. .. 16, Strand Road ..	.. Hindu
2791	Chatarji, Indra Bhusan ..	.. Book-keeping Clerk, Stewarts and Lloyds, Ld ..	.. 6, Royal Exchange Place	.. ditto
2792	Chatarji, Indubhushan ..	.. Stenographer, Bengal Chamber of Commerce ..	.. 2, Clive Street ..	.. ditto
2793	Chatarji, Indubhusan ..	.. Assistant, Excise Commissioner's Office, Bengal ..	.. Writers' Buildings ..	.. ditto
2794	Chatarji, Jaladhar ..	.. Assistant, Surgeon-General's Office, Bengal ..	.. Writers' Buildings ..	.. ditto
2795	Chatarji, Janaki Nath, MA	.. Superintendent, T M's Department, Port Commissioners Office	Strand Road ..	.. ditto
2796	Chatarji, Jatindra Nath, BA	.. Asistant, Reserve Bank of India	.. 8, Council House Street ..	.. ditto
2797	Chatarji, Jatindranath, MA	.. Clerk, D A G P & T Office	.. 7, Koilaghat Street ..	.. ditto
2798	Chatarji, Jibandhan ..	.. Clerk, Turner, Morrison & Co, Ld	.. 6, Lyons Range ..	.. ditto
2799	Chatarji, Jiban Krishna ..	.. Assistant, Calcutta University	.. Senate House ..	.. ditto
2800	Chatarji, Jiban Krishna ..	.. Assistant, Imperial Chemical Industries (India), Ld	.. 18, Strand Road ..	.. ditto
2801	Chatarji, Jiban Lal ..	.. Salesman, Dodge and Seymour, Ld	.. Tower House, Chowringhee Square ..	ditto
2802	Chatarji, Jitendra Nath, BA	.. Assistant, Accountant-General's Office, Bengal ..	.. Treasury Buildings ..	.. ditto
2803	Chatarji, Jitendra Nath ..	.. Assistant, Excise Commissioner's Office, Bengal ..	.. Writers' Buildings ..	.. ditto
2804	Chatarji, Jitendra Nath ..	.. Assistant, Brooke Bond (India), Ld	.. 2, Metcalfe Street ..	.. ditto

2805	Chatarji, Jnanendra Lal ..	.. Assistant, Education Department, Bengal Secretariat	.. Writers' Buildings ..	.. ditto
2806	Chatarji, Jagendra Nath	.. Assistant, Reserve Bank of India	.. 8, Council House Street ..	.. ditto
2807	Chatarji, Jogesh Chandra	.. Assistant, Burn & Co, Ld	.. 12, Mission Row ..	.. ditto
2808	Chatarji, Jyotirmaya, MSC	.. Demonstrator, Scottish Church College	.. 4, Cornwallis Square ..	.. ditto
2809	Chatarji, Jyotish Chandra	.. Stenographer, Longmans Green & Co, Ld ..	.. 6, Old Court House Street	.. ditto
2810	Chatarji, Jyotish Chandra	.. Clerk, D A G P & T Office	.. 7, Koilaghat Street ..	.. ditto
2811	Chatarji, Jyotish Chandra	.. Assistant, Central Stationery Office	.. 3, Church Lane ..	.. ditto
2812	Chatarji, Kali Charan ..	.. Assistant Cashier, Sun Life of Canada	.. 12, Dalhousie Square, East	.. ditto
2813	Chatarji, Kali Charan ..	.. Assistant, Calcutta University	.. Senate House ..	.. ditto
2814	Chatarji, Kalikrishna ..	.. Clerk, C O P S Office, E I R	.. E I R House ..	.. ditto
2815	Chatarji, Kalipada ..	.. Section Superintendent, Engineer's Office, E B R ..	.. 3, Kaylaghat Street ..	.. ditto
2816	Chatarji, Kamala Charan	.. Assistant, Office of the Controller of Currency ..	.. Treasury Buildings ..	.. ditto
2817	Chatarji, Kanak Krishna	.. Assistant, Calcutta University	.. Senate House ..	.. ditto
2818	Chatarji, K C ..	.. Manager, Sen & Pandit	.. Mercantile Buildings ..	.. ditto
2819	Chatarji, K C ..	.. Assistant, Burn & Co, Ld	.. 12 , Mission Row ..	.. ditto
2820	Chattarji, K D ..	.. Assistant, Guest, Keen, Williams, Ld	.. 7, Council House Street ..	.. ditto
2821	Chatarji, K D ..	.. Assistant, Lipton, Ld	.. 9, Weston Street ..	.. ditto

No.	Names.	Style or calling.	Residence or place of business.	Religion.
2822	Chatarji, Krishna Kumar	Head Clerk, Traffic Department, E B R	3, Kaylaghat Street	Hindu
2823	Chatarji, Krishna Kumar	Assistant, Bird & Co	1-1, Clive Street	ditto
2824	Chatarji, Krishna Lal	Clerk, Lloyds Bank, Ld	101-1, Clive Street	ditto
2825	Chatarji, Kshetra Nath	Assistant, Bird & Co	1-1, Clive Street	ditto
2826	Chatarji, Kshitish Chandra	Sub-Head, Accounts Office, E B R	3, Kaylaghat Street	ditto
2827	Chatarji, Kumudbandhu	Assistant, Burmah Shell Co of India, Ld	Hongkong House	ditto
2828	Chatarji, Kunja Bihari	Head Clerk, Kalamazoo (Sales), Ld	2 & 3, Clive Row	ditto
2829	Chatarji, Kunja Lal	Clerk, Post Audit, Port Commissioners' Office	Strand Road	ditto
2830	Chatarji, Lal Bihari	Assistant, Macneill & Co	2, Fairlie Place	ditto
2831	Chatarji, Lalit Mohan	Assistant, Mackinnon, Mackenzie & Co	16, Strand Road	ditto
2832	Chatarji, Lalit Mohan	Assistant, Reserve Bank of India	8, Council House Street	ditto
2833	Chatarji, Lalit Mohan	Assistant, Office of the I-G of Police	Writers' Buildings	ditto
2834	Chatarji, Makhanlal, BL	Assistant, Commercial Intelligence Department	1, Council House Street	ditto
2835	Chatarji, Makhanlal	Clerk, Calcutta Improvement Trust	5, Clive Street	ditto
2836	Chatarji, Manimohan	Accountant, Davenport & Co,	6, Church Lane	ditto

2837	Chatarji, Manindra Kumar, MA	Assistant, Calcutta University	Senate House	ditto
2838	Chatarji, Manindra Nath	Assistant, Price, Waterhouse, Peat & Co	B-4, Clive Buildings	ditto
2839	Chatarji, Manmatha Nath	Assistant, Reserve Bank of India	8, Council House Street	ditto
2840	Chatarji, Manmatha Nath	Assistant Store Keeper, Calcutta Improvement Trust	5, Clive Street	ditto
2841	Chatarji, Manmatha Nath	Assistant, Office of the Geological Survey of India	27, Chowringhee	ditto
2842	Chatarji, M C	Assistant, Remington Rand Inc	3, Council House Street	ditto
2843	Chatarji, M K	Commercial Assistant, Reuters, Ld	7, Hare Street	ditto
2844	Chatarji, M N, BA	Partner, Mookerjee Bros	126-B, Amherst Street	ditto
2845	Chatarji, Mrityunjaya	Ledger-Keeper, Geo Henderson & Co, Ld	101-1, Clive Street	ditto
2846	Chatarji, Mrityunjaya	Assistant, Commercial Union Assurance Co, Ld	32, Dalhousie Square	ditto
2847	Chatarji, Nagendra N	Clerk, Burmah Shell Co of India, Ld	Hongkong House	ditto
2848	Chatarji, Nagendra N	Clerk, Shaw, Wallace & Co	4, Bankshall Street	ditto
2849	Chatarji, Nagendra N	Assistant, Grahams Trading Co (India), Ld	6, Lyons Range	ditto
2850	Chatarji, Nagendra Nath	Clerk, C E S C, Ld	Victoria House	ditto
2851	Chatarji, Nagendra Nath	Assistant, Reserve Bank of India	8, Council House Street	ditto
2852	Chatarji, Nagendra Nath, BA	Assistant, Office of the I-G of Police	Writers' Buildings	ditto
2853	Chatarji, Nalinaksha	Assistant, Begg, Dunlop & Co, Ld	2, Hare Street	ditto
2854	Chatarji, Nalinaksha, BA	Supervisor, Telegraph Check Office	33, Dalhousie Square, South	ditto
2855	Chatarji, Nalin Bihari	Clerk, W T Henley's Telegraph Works Co, Ld	Old Court House Corner	ditto
2856	Chatarji, Nalin Krishna	Assistant, Mackinnon Mackenzie & Co	16, Strand Road	ditto
2857	Chatarji, Nanda Gopal	Examiner of Stores, Indian Stores Department (Inspection)	6, Esplanade, East	ditto

No.	Names.	Style or calling	Residence or place of business.	Religion.
2858	Chatarji, Nanda Lal	Clerk, Gillanders, Arbuthnot & Co	8, Clive Street	Hindu
2859	Chatarji, Nani Gopal	Assistant, Bird & Co	1-1, Clive Street	ditto
2860	Chatarji, Nani Gopal	Head Clerk, Mechl Department, E B R	3, Kaylaghat Street	ditto
2861	Chatarji, Narayan Ch	Steno-typist, C O P S Office, E I R	E I R House	ditto
2862	Chatarji, Narayan Ch	Clerk, Burmah Shell Co of India, Ld	Hongkong House	ditto
2863	Chatarji, Narayan Das	Assistant, Accountant-General's Office, Bengal	Treasury Buildings	ditto
2864	Chatarji, Narendra Krishna, BSC	Assistant Analyst, Bengal Public Health Laboratory	Chittaranjan Avenue	ditto
2865	Chatarji, Narendra Nath	Section Superintendent, Engineer's Office, E B R	3, Kaylaghat Street	ditto
2866	Chatarji, Narendra Nath	Assistant, Bengal Chemical and Pharmaceutical Works, Ld	31, Chittaranjan Avenue, South	ditto
2867	Chatarji, Narendra Nath	Head Clerk (Accident), Commercial Union Assurance Co, Ld	32, Dalhousie Square	ditto
2868	Chatarji, Naresh Chandra	Assistant, Legislative Department, Bengal	Council House	ditto
2869	Chatarji, N B	Assistant Bullion Keeper, Calcutta Mint	47, Strand Road	ditto
2870	Chatarji, N C	Cashier, Manufacturers' Life Insurance Co	27, Dalhousie Square	ditto
2871	Chatarji, Nilkanta	S A S Clerk, Army Factory Accounts	6, Esplanade, East	ditto
2872	Chatarji, Nirad Bihari	Clerk, C O S Office, E I R	E I R House	ditto
2873	Chatarji, Nirmal Chandra	Head Clerk, North British & Mercantile Insurance Co, Ld	101-1, Clive Street	ditto
2874	Chatarji, Nripendra Kumar	Sr Clerk, Office of the Controller of Purchase, Indian Stores Department	6, Esplanade, East	ditto
2875	Chatarji, Nripendra Nath	Building Inspector, Calcutta Corporation	Municipal Office	ditto
2876	Chatarji, Nritya Gopal	Clerk, Turner, Morrison & Co, Ld	6, Lyons Range	ditto
2877	Chatarji, P	Clerk, Dunlop Rubber Co (India), Ld	42, Free School Street	ditto
2878	Chatarji, Panchanan	Sr Tester, C E S C, Ld	Victoria House	ditto

2879	Chatarji, Panchudhan MA	Assistant Superintendent, Reserve Bank of India	8, Council House Street		ditto
2880	Chatarji, Pangshu Bhusan	S A S Clerk, Army Factory Accounts	6, Esplanade, East		ditto
2881	Chatarji, Pankoj Kumar B COM	Clerk, D A G P & T Office	7, Koilaghat Street		ditto
2882	Chatarji, P C	Partner, Ganguli & Chatarjea	10-C, Government Place, East		ditto
2883	Chatarji, Phani Bhusan	Estimator, Executive Engineer's Office, Damodar Division	Treasury Buildings		ditto
2884	Chatarji, Phani Bhusan, BA	Assistant, Explosives Office	1, Council House Street		ditto
2885	Chatarji, Phanindra Bhusan	Clerk, Engineering Department, Port Commissioners' Office	Strand Road		ditto
2886	Chatarji, P K	Senior Assistant Estate Superintendent, Port Commissioners' Office.	Strand Road		ditto
2887	Chatarji, Prabodh Chandra, BSc	Assistant, Board of Revenue, Bengal	Writers' Buildings		ditto
2888	Chatarji, Prabodh Chandra	Assistant, Balmer Lawrie & Co, Ld	103, Clive Street		ditto
2889	Chatarji, Prabodh Chandra	Assistant, James Finlay & Co, Ld	1, Clive Street		ditto
2890	Chatarji, Prabodh Chandra	Chief Clerk, Bhattacharjee & Co	28, Pollock Street		ditto
2891	Chatarji, Prabodh Chandra	Clerk, Chief Auditor's Office, E I Ry	E I R House		ditto
2892	Chatarji, Prabodh Kumar, BSc, BL, GDA	Examiner of Accounts, Income-tax Office	6, Esplanade East		ditto
2893	Chatarji, Prabodh Kumar	Assistant, Bengal Telephone Corporation, Ld	8, Hare Street		ditto
2894	Chatarji, Prafulla Chandra	Stenographer, Agent's Office, E B R	3, Kaylaghat Street		ditto
2895	Chatarji, Prakash Chandra, BA	Assistant, Bengali Translator's Office	Writers' Buildings		ditto
2896	Chatarji, Pramatha Nath	Eng Supervisor, Calcutta Corporation, District No I	79, Cornwallis Street		ditto
2897	Chatarji, Pramatha Nath	Assistant, Accountant-General's Office, Bengal	Treasury Buildings		ditto

No.	Names	Style or calling	Residence or place of business.	Religion
2898	Chatarji, Prandhan ..	.. Clerk, Traffic Department, E B R	3, Koilaghat Street	Hindu
2899	Chatarji, Pran Krishna	.. Sub-Head, Accounts Dept, E B R	3, Koilaghat Street	ditto
2900	Chatarji, Prasad Chandra	.. Clerk, Kilburn & Co	4, Fairlie Place	ditto
2901	Chatarji, Pratul Bihari ..	.. Assistant, Board of Revenue, Bengal	Writers' Buildings	ditto
2902	Chatarji, Pravas Chandra	.. Assistant, Office of the Private Secretary to H E the Governor of Bengal.	Government House	ditto
2903	Chatarji, Pulin Bihari ..	.. Assistant, Accountant-General's Office, Bengal	Treasury Buildings	ditto
2904	Chatarji, Pulin Krishna ..	.. Assistant, Accountant-General's Office, Bengal	Treasury Buildings	ditto
2905	Chatarji, Rajani Kanta ..	.. Clerk, Engineering Department, Port Commissioners' Office ..	Strand Road	ditto
2906	Chatarji, Rajani Kanta ..	.. Office Supdt, Personnel Branch, Agency Dept, E B R ..	3, Kaylaghat Street	ditto
2907	Chatarji, Raj Kumar ..	.. Demonstrator, Vidyasagar College	39, Shankar Ghose Lane	ditto
2908	Chatarji, Rakhal Chandra	.. Assistant, Office of the Inspector-General of Police	Writers' Buildings	ditto
2909	Chatarji, Ram Chandra ..	.. Clerk, Engineer's Office, E B R	3, Kaylaghat Street	ditto
2910	Chatarji, Rasamaya, MA	.. Professor, Ripon College	24, Harrison Road	ditto
2911	Chatarji, Renupada, BA, BL	.. Assistant, Bengal Secretariat, P W D	Writers' Buildings	ditto
2912	Chatarji, R B ..	.. Clerk, C E S C, Ld	Victoria House	ditto
2913	Chatarji, Sabitri Prasanna, BA	.. Publicity Officer, Hindusthan Co-operative Insurance Society, Ld	Hindusthan Buildings	ditto
2914	Chatarji, Sailesh Chandra, BA	.. Assistant, Bengal Secretariat, Finance Department ..	Writers' Buildings	ditto
2915	Chatarji, Sanat Kumar, BA	.. Assistant, Central Stationery Office	3, Church Lane	ditto
2916	Chatarji, Santa Kumar ..	.. Assistant, Superintendent, E B Ry	3, Koilaghat Street	ditto
2917	Chatarji, Santosh Kumar	.. Assistant, Accounts Department, Calcutta Corporation ..	Municipal Office	ditto
2918	Chatarji, Sarada Prasad ..	.. Clerk, C E's Office, E I R	E I R House	ditto

2919	Chatarji, Sarathi Krishna	Clerk, D A G P & T Office	7, Koilaghat Street	ditto
2920	Chatarji, Saroj Kumar	Assistant, Martin & Co	12, Mission Row	ditto
2921	Chatarji, Saroj Kumar	Building Inspector, Calcutta Corporation	Municipal Office	ditto
2922	Chatarji, Satish Ch	Clerk, C A O's Office, E I R	E I R House	ditto
2923	Chatarji, Satish Chandra	Head Estimator, Office of the Superintending Engineer, Presidency Circle, P W D.	Writers' Buildings	ditto
2924	Chatarji, Satish Chandra	Assistant, Land Revenue Department, Calcutta Collectorate	3, Charnock Place	ditto
2925	Chatarji, Satish Chandra	Assistant, Accountant-General's Office, Bengal	Treasury Buildings	ditto
2926	Chatarji, Satkari	Assistant, McLeod & Co	28, Dalhousie Square	ditto
2927	Chatarji, Satyacharan	Auditor, George Read & Co	Avenue House, Chowringhee Square	ditto
2928	Chatarji, Satya Ranjan	Stenographer, Begg Dunlop & Co, Ld	2, Hare Street	ditto
2929	Chatarji, Satyendra Nath	Clerk, Telegraph Check Office	33, Dalhousie Square, South	ditto
2930	Chatarji, Shachindra Nath	Clerk, D A G P & T Office	7, Koilaghat Street	ditto
2931	Chatarji, Shachindra Nath	Assistant, A-G's Office, Bengal	Treasury Buildings	ditto
2932	Chatarji, Shachindra Nath	Assistant, Commercial Union Assurance Co, Ld	32, Dalhousie Square	ditto
2933	Chatarji, Shachibrata	Assistant, A-G's Office, Bengal	Treasury Buildings	ditto
2934	Chatarji, Shailendra Krishna	Broker, Anderson, Wright & Co	22, Strand Road	ditto
2935	Chatarji, Shailendra Nath	Assistant, Reserve Bank of India	8, Council House Street	ditto
2936	Chatarji, Shailendra Nath	Clerk, Royal Insurance Co, Ld	26 & 27, Dalhousie Square	ditto
2937	Chatarji, Shambhu Dass	Assistant, Commercial Intelligence Department	1, Council House Street	ditto
2938	Chatarji, Shambhu Nath, BSc	Clerk, D A G P & T Office	7, Koilaghat Street	ditto
2939	Chatarji, Shambhu Nath, BA	Assistant, Bengal Secretariat, Political (Jails) Department	Writers' Buildings	ditto
2940	Chatarji, Shambhu Nath	Hd Clerk, Geo Miller & Co, Ld	7, Hastings Street	ditto
2941	Chatarji, Sham Lal	Assistant, A-G's Office, Bengal	Treasury Buildings	ditto

No.	Names.	Style or calling.	Residence or place of business.	Religion.
2942	Chatarji, Shanti Nath	Cashier, North British & Mercantile Insurance Co, Ld	101-1, Clive Street	Hindu
2943	Chatarji, Sharat Chandra	Assistant, A-G's Office, Bengal	Treasury Buildings	ditto
2944	Chatarji, Sharat Chandra	Assistant, Mackinnon, Mackenzie & Co	16, Strand Road	ditto
2945	Chatarji, Shashadhar	Accountant, Hijli Division, P W D, Bengal	Writers' Buildings	ditto
2946	Chatarji, Shashadhar	Assistant, Mackinnon, Mackenzie & Co	16, Strand Road	ditto
2947	Chatarji, Shib Chandra	Assistant, Mackinnon, Mackenzie & Co	16, Strand Road	ditto
2948	Chatarji Shib Charan	Clerk, Engineer's Office, E B R	3, Kaylaghat Street	ditto
2949	Chatarji, Shib Nath	Treasurer, Calcutta Tramways Co, Ld	7, Church Lane	ditto
2950	Chatarji, Shrish Chandra	Assistant, Office of the Director of Industries, Bengal	40-1A, Free School Street	ditto
2951	Chatarji, Shyama Ch	Clerk, Sun Life of Canada	12, Dalhousie Square, East	ditto
2952	Chatarji, Shyamapada, BA	Head Clerk, Health Department, Calcutta Corporation	Municipal Office	ditto
2953	Chatarji, Siva Prosad	Clerk, Burmah Shell Co of India, Ld	Hongkong House	ditto
2954	Chatarji, Subodh Chandra	Assistant, Board of Revenue, Bengal	Writers' Buildings	ditto
2955	Chatarji, Subodh Chandra, BA	Assistant, Accountant-General's Office, Bengal	Treasury Buildings	ditto
2956	Chatarji, Subodh Narayan	Stenographer, Agent's Office, E B R	3, Kaylaghat Street	ditto
2957	Chatarji, Sudhan C	Accountant, Humayan Properties, Ld	1, Humayan Place	ditto
2958	Chatarji, Sudhangsumay	License Inspector, Calcutta Corporation	Municipal Office	ditto
2959	Chatarji, Sudhangsu Sekhar	Assistant, A-G's Office, Bengal	Treasury Buildings	ditto
2960	Chatarji, Sudhir Chandra	Assistant, Bird & Co	1-1, Clive Street	ditto
2961	Chatarji, Sukumar	Foreman, Testing Department, C E S C, Ld	Victoria House	ditto
2962	Chatarji, Sukumar	Clerk, C A O's Office, E I R	E I R House	ditto

2963	Chatarji, Sukumar	Head Clerk, Marine Department, New Zealand Insurance Co, Ld	26, Dalhousie Square	ditto
2964	Chatarji, Suniti Nath	Assistant, Patent Office	1, Council House Street	ditto
2965	Chatarji, Surath Chandra	Assistant, Ford, Rhodes, Thornton & Co	Tower House, Chowringhee Square	ditto
2966	Chatarji, Surendra N	Clerk, C A O's Office, E I R	E I R House	ditto
2967	Chatarji, Surendra Nath	Assistant, A-G's Office, Bengal	Treasury Buildings	ditto
2968	Chatarji, Surendra Nath	Clerk, Gillanders, Arbuthnot & Co	8, Clive Street	ditto
2969	Chatarji, Surendra Nath	In-charge, Litho Drawing Section, Photo-Litho Office, Survey of India.	14, Wood Street	ditto
2970	Chatarji, Surendra Nath	Accountant, National Council, Y M C A	5, Russell Street	ditto
2971	Chatarji, Surendra Nath	Clerk, Shaw, Wallace & Co	4, Bankshall Street	ditto
2972	Chatarji, Suresh Chandra, BSC	S A Superintendent, No I Drawing Office, Survey of India	13, Wood Street	ditto
2973	Chatarji, Suresh Chandra	Clerk, E B R	3, Koilaghat Street	ditto
2974	Chatarji, Tarak Chandra	Assistant, Commercial Intelligence Department	1, Council House Street	ditto
2975	Chatarji, Taraknath	Assistant, Ford, Rhodes, Thornton & Co	Tower House, Chowringhee Square	ditto
2976	Chatarji, Taraprasad, MA	Assistant, Commercial Intelligence Department, India	1, Council House Street	ditto
2977	Chatarji, Tulsi Charan	Assistant, Mackinnon, Mackenzie & Co	16, Strand Road	ditto
2978	Chatarji, Tulsidas	Clerk, National City Bank of New York	4, Clive Street	ditto
2979	Chatarji, Upendra Nath	Chief Clerk, General Accident, Fire & Life Assurance Corporation, Ld.	7, Hare Street	ditto
2980	Chatarji, Upendra Nath	Assistant, Accountant-General's Office, Bengal	Treasury Buildings	ditto
2981	Chatarji, Upendra Nath	Stenographer to the Physical Director, Bengal	Writers' Buildings	ditto
2982	Chatarji, Upendra Nath	Clerk, Gillanders, Arbuthnot & Co	8, Clive Street	ditto
2983	Chatarji, Upendra Nath	Clerk, Mechl Department, E B R	3, Kaylaghat Street	ditto
2984	Chatarji, Upendra Nath	Assistant, James Finlay & Co. Ld	1, Clive Street	ditto

No.	Names.	Style or calling.	Residence or place of business.	Religion.
2985	Chaudhuri, Abdul Aziz, BA	Assessing Inspector, Calcutta Corporation	Municipal Office	Mahomedan
2986	Chaudhuri, Altaf Ahmed	Accountant, Eastern Federal Union Insurance Co, Ld	9, Clive Street	ditto
2987	Chaudhuri, Amulya Mohan	Assistant, Surgeon-General's Office, Bengal	Writers' Buildings	Hindu
2988	Chaudhuri, Anukul Chandra	Ledger Keeper, Geo Henderson & Co	101-1, Clive Street	ditto
2989	Chaudhuri, Ashutos	Building Inspector, Calcutta Corporation	Municipal Office	ditto
2990	Chaudhuri, Aswini Kumar	Building Inspector, Calcutta Corporation	Municipal Office	ditto
2991	Chaudhuri, Azfat Raza, BA	Con Overseer, Calcutta Corporation, District III	Hogg Street	Mahomedan
2992	Chaudhuri, B	Assistant, Jessop & Co, Ld	93, Clive Street	Hindu
2993	Chaudhuri, Bagla Charan, BA	Clerk, D A G P & T Office	7, Koilaghat Street	ditto
2994	Chaudhuri, Bejoy Chandra	Assistant, Accounts Department, Calcutta Corporation	Municipal Office	ditto
2995	Chaudhuri, Bhupendra Nath	Assistant, Legislative Department, Bengal	Council House	ditto
2996	Chaudhuri, Bijali Bhusan	Assistant, Reserve Bank of India	8, Council House Street	ditto
2997	Chaudhuri, Gopal Chandra	Passed Accounts Clerk, Western (Electrical) Division, P W D	Writers' Buildings	ditto
2998	Chaudhuri, Harendra Lal, MA	Head Clerk, Sanskrit College	College Square	ditto
2999	Chaudhuri, Haripada	Sub-Head, C A O's Office, E I R	E I R House	ditto
3000	Chaudhuri, Indubhusan	Clerk, Ralli Brothers, Ld	16, Hare Street	ditto
3001	Chaudhuri, Jamini Bhusan	Assistant, Reserve Bank of India	8, Council House Street	ditto
3002	Chaudhuri, Jatindra Nath	Head Computor, C E's Office, E I R	E I R House	ditto
3003	Chaudhuri, Jatindra Nath	Assistant, Bengal Secretariat, P W D	Writers' Buildings	ditto

3004	Chaudhuri, Jayantipada ..	Assistant, Controller's Office, Calcutta University ...	Senate House	ditto
3005	Chaudhuri, Jiban Krishna	Assistant, Patent Office	1, Council House Street	ditto
3006	Chaudhuri,, Kalidas, MA	Teacher, Bangabasi College School	19, Scott Lane	ditto
3007	Chaudhuri, Kanai Nath, MA	Offg Accountant, Accountant-General's Office, Bengal	Treasury Buildings	ditto
3008	Chaudhuri, Keshab Lal	Assistant, Calcutta Improvement Trust	5, Clive Street	ditto
3009	Chaudhuri, Kumud Bandhu	Head Clerk, Mechl Department, E B R	3, Kaylaghat Street	ditto
3010	Chaudhuri, M, BA	Clerk, Calcutta Mint	47, Strand Road	ditto
3011	Chaudhuri, Mahendra Nath	Head Supervisor, Mathematical Instrument Office	15, Wood Street	ditto
3012	Chaudhuri, Mahomed Ali, BL	Sub-Inspector, License Department, Calcutta Corporation	Municipal Office	Mahomedan
3013	Chaudhuri, Manindra Nath	Clerk, Central Stationery Store	3, Church Lane	Hindu
3014	Chaudhuri, Murari Mohan, MA, BL	Assistant, D J Keymer & Co, Ld	4, Lyons Range	ditto
3015	Chaudhuri, N K	Divisional Accountant, A-G's Office, Bengal	Treasury Buildings	ditto
3016	Chaudhuri, Nanda Lal	Assistant, Macneill & Co	2, Fairlie Place	ditto
3017	Chaudhuri, Nani Madhav, MA	Assistant, Bengali Translator's Office	Writers' Buildings	ditto
3018	Chaudhuri, Phani Bhusan	Stenographer & Junior Council Reporter	Writers' Buildings	ditto

No.	Names.	Style or calling.	Residence or place of business.	Religion.
3019	Chaudhuri, Phani Lal	Building Inspector, Calcutta Corporation	Municipal Office	Hindu
3020	Chaudhuri, Pramatha Nath	Clerk, Royal Exchange Assurance	1 & 2, Old Court House Corner	ditto
3021	Chaudhuri, Ram Govind, MA	Clerk, D A G P & T Office	7, Koilaghat Street	ditto
3022	Chaudhuri, Santosh Kumar	Building Inspector, Calcutta Corporation	Municipal Office	ditto
3023	Chaudhuri, Sarbaribhusan	Stenographer, Office of the Controller of Currency	Treasury Buildings	ditto
3024	Chaudhuri, Saroj Kumar	Assistant, Bengal Secretariat, Appointment Department	Writers' Buildings	ditto
3025	Chaudhuri, Satish Chandra	Clerk, Calcutta Improvement Trust	5, Clive Street	ditto
3026	Chaudhuri, Satish Chandra	Assistant, Accounts Department, Calcutta Corporation	Municipal Office	ditto
3027	Chaudhuri, Sharat Chandra	Clerk, Burmah Shell Co of India, Ld	Hongkong House	ditto
3028	Chaudhuri, Sudhir Chandra	Assistant, Office of the Inspector-General of Prisons, Bengal	Writers' Buildings	ditto
3029	Chaudhuri, Sukumar	Assistant Supdt, Office of the Director of Industries, Bengal	40-1A, Free School Street	ditto
3030	Chaudhuri, Surendra Nath	Clerk, C E's Office, E I R	E I R House	ditto
3031	Chaudhuri, Surendra Nath	Engineering Overseer, Calcutta Corporation, District I	79, Cornwallis Street	ditto
3032	Chaudhuri, T C N	Clerk, Post-Audit, Port Commissioners' Office	Strand Road	ditto
3033	Coar, Mohimaranjan	Head Clerk, Stores Dept, E B R	3, Koilaghat Street	ditto

3034	Dalui, Bijaya Krishna, BA	Clerk, D A G P & T Office	7, Koilaghat Street	ditto
3035	Das, Adhar Chandra	Assistant, Emigration Office	8, Dalhousie Square, East	ditto
3036	Das, Akshaya Kumar	Ledger-keeper, Geo Henderson & Co, Ld	101-1, Clive Street	ditto
3037	Das, Amrita Lal	Special Inspector, Traffic Department, E B R	3, Koilaghat Street	ditto
3038	Das, Amrita Lal	Assistant, Office of the Director of Public Health, Bengal	Writers' Buildings	ditto
3039	Das, Anil Krishna	Assistant, Accountant-General's Office, Bengal	Treasury Buildings	ditto
3040	Das, Annada Prasad	Stenographer, Mather & Platt, Ld	7, Hare Street	ditto
3041	Das, Aprakash Chandra	Clerk, D A G P & T Office	7, Koilaghat Street	ditto
3042	Das, Arabinda Chandra	Clerk, Ralli Brothers, Ld	16, Hare Street	ditto
3043	Das, Ashru Mukul	Clerk, Martin & Co	12, Mission Row	ditto
3044	Das, Ashutos	Assistant, Mackinnon, Mackenzie & Co	16, Strand Road	ditto
3045	Das, Ashutos	Assistant, Reserve Bank of India	8, Council House Street	ditto
3046	Das, Ashutos	Clerk, Lloyds Bank, Ld	101-1, Clive Street	ditto
3047	Das, Ashwini Kumar	Surveyor, Calcutta Improvement Trust	5, Clive Street	ditto
3048	Das, Balai Chandra	Assistant, Commercial Union Assurance Co, Ld	32, Dalhousie Square	ditto

No.	Names.	Style or calling.	Residence or place of business.	Religion.
3049	Das, Ban Bihari	Clerk, C A O's Office, E I R	E I R House	Hindu
3050	Das, Basanta, B Sc	Partner, Dass & Co	20, Strand Road	ditto
3051	Das, Bholanath	Assistant, Central Forms Store	166, Dharamtala Street	ditto
3052	Das, Bhupendra Nath, MA	Clerk, Dy Accountant-General, Posts & Telegraphs Office	7, Koilaghat Street	ditto
3053	Das, Bhupendra Nath	Clerk, Imperial Bank of India	3, Strand Road	ditto
3054	Das, Bibhuti Bhusan	Clerk, Chartered Bank of India, Australia & China	1-1, Clive Street	ditto
3055	Das, Bijaya Krishna	Clerk, Bengal Smoke Nuisances Commission	3, Charnock Place	ditto
3056	Das, Bijaya Krishna	Clerk, Gillanders, Arbuthnot & Co	8, Clive Street	ditto
3057	Das, Birendra Lal	Assistant, J & R Hutchison, Ld	29, Waterloo Street	ditto
3058	Das, B P	Dy Accountant, Associated British Machine Tool Makers, Ld	6, Old Post Office Street	ditto
3059	Das, Brajalal	Clerk, Agent's Office, E I R	E I R House	ditto
3060	Das, Dayal Kumar	Clerk, Royal Asiatic Society of Bengal	1, Park Street	Christian
3061	Das, Debendra Nath, BA	Clerk, D A G P & T Office	7, Koilaghat Street	Hindu
3062	Das, Dinabandhu, BSc	Lecturer, Calcutta Technical School	110, Surendra Nath Banerjee Road	ditto
3063	Das, D N	Levelling Surveyor, Calcutta Corporation	Municipal Office	ditto
3064	Das, Dulal Ch	Superintendent, E B R, Engineering Deptt	3, Koilaghat Street	ditto

3065	Das, Gagan Chandra	Cashier, Sun Life of Canada	12, Dalhousie Square, East	ditto
3066	Das, Gourhari	Assistant, Reserve Bank of India	8, Council House Street	ditto
3067	Das, Gaurishankar	Assistant, Accountant-General Office, Bengal	Treasury Buildings	ditto
3068	Das, Girija Bhusan	Clerk, Ralli Brothers, Ld	16, Hare Street	ditto
3069	Das, G L	Assistant, Mackinnon, Mackenzie & Co	8, Strand Road	ditto
3070	Das, Haridas	Head Assistant and Accountant, Victoria Memorial Trust Office	Victoria Memorial Hall	ditto
3071	Das, Haripada	Clerk, Ralli Brothers, Ld	16, Hare Street	ditto
3072	Das, Haripada	Proof Examiner, Photo-Litho Office, Survey of India	14, Wood Street	ditto
3073	Das, Hemanta Kumar, BSc	Clerk, D A G P & T Office	7, Koilaghat Street	ditto
3074	Das, Hem Chandra	Assistant, Accountant-General's Office, Bengal	Treasury Buildings	ditto
3075	Das, Himangshu Sekhar, BE	Assistant Engineer, J C Banerjee, Ld	20, Strand Road	ditto
3076	Das, Hiralal	Clerk, Gillanders, Arbuthnot & Co	8, Clive Street	ditto
3077	Das, Jagat Bandhu, MA	Clerk, D A G P & T Office	7, Koilaghat Street	ditto
3078	Das, Jatindra Mohan	Clerk, D A G P & T Office	7, Koilaghat Street	ditto
3079	Das, Jatindra Nath, BA	Assistant, Accountant-General's Office, Bengal	Treasury Buildings	ditto
3080	Das, Jitendra Mohan	Assistant Lighting Superintendent, Calcutta Corporation	Municipal Office	ditto
3081	Das, Jitendra Nath	Assistant Engineer, Bengal Telephone Corporation, Ld	10, Circus Avenue, Park Circus	ditto

No.	Names.	Style or calling.	Residence or place of business.	Religion.
3082	Das, Jogendra Nath	Clerk, Ralli Brothers. Ld	16, Hare Street	Hindu
3083	Das, Joseph Jnanendra Mohan	Assistant, Office of the Inspector-General of Prisons, Bengal	Writers' Buildings	Christian
3084	Das, Jugal Kishore	Clerk, Turner, Morrison & Co, Ld	6, Lyons Range	Hindu
3085	Das, Jyotish Chandra	Stenographer, Talbot & Co	Tower House	ditto
3086	Das, Jyotish Chandra	Clerk, Post-Audit, Port Commissioners' Office	Strand Road	ditto
3087	Das, K	Assistant Printer, *Statesman*, Ld	Statesman House	ditto
3088	Das, Kalachand	Assistant, Accountant-General's Office, Bengal	Treasury Buildings	ditto
3089	Das, Kali Mohan	Levelling Surveyor, Special Officer's Department, Calcutta Corporation.	Municipal Office	ditto
3090	Das, Kalipada, BA	Assistant, Calcutta University	Senate House	ditto
3091	Das, Kanai Lal	Head Clerk, Shaw, Wallace & Co	4, Bankshall Street	ditto
3092	Das, Khagendra Nath	Clerk, Burmah Shell Co of India, Ld	Hongkong House	ditto
3093	Das, Khagendra Nath, MSC	Assistant, Zoological Survey of India	Indian Museum	ditto
3094	Das, Kishori Lal	Partner, Dass & Co	20, Strand Road	ditto
3095	Das, Kishori Mohan	Assistant, F W Heilgers & Co	1-1, Clive Street	ditto
3096	Das, Krishna Kishore, BA	Assistant, Board of Revenue, Bengal	Writers' Buildings	ditto
3097	Das, Kshetra Mohan	Clerk, D A G P & T Office	7, Koilaghat Street	ditto
3098	Das, Kshirode Kumar	Assistant, Reserve Bank of India	8, Council House Street	ditto
3099	Das, Kshitish Chandra	Clerk, Telegraph Check Office	33, Dalhousie Square, South	ditto

3100	Das, Lal Bihari	Clerk, Shaw, Wallace & Co	4, Bankshall Street	ditto
3101	Das, Lal Mohan, BA	Assistant, Accountant-General's Office, Bengal	Treasury Buildings	ditto
3102	Das, Lalit Mohan	Clerk, Telegraph Check Office	33, Dalhousie Square, South	ditto
3103	Das, L M	Assistant, Mackinnon, Mackenzie & Co	8, Strand Road	ditto
3104	Das, Mahananda Lal	Clerk, Engineer's Office, E B R	3, Koilaghat Street	ditto
3105	Das, Mahendra Nath	Clerk, Telegraph Check Office	33, Dalhousie Square, South	ditto
3106	Das, Maheshwar	Clerk, Imperial Bank of India	3, Strand Road	ditto
3107	Das, Manmatha	Assistant, Accountant-General's Office, Bengal	Treasury Buildings	ditto
3108	Das, Manick Lal, BA	Partner, Dass & Co	20, Strand Road	ditto
3109	Das, Manindra Mohan	Assistant, Indian Stores Department (Inspection)	6, Esplanade, East	ditto
3110	Das, Manotosh	Assistant, F W Heilgers & Co	1-1, Clive Street	ditto
3111	Das, Nagendra Chandra, MA, BT	Assistant Master, Sanskrit Collegiate School	College Square	ditto
3112	Das, Nagendra Kumar	2nd Clerk, Archaeological Survey, Eastern Circle	Indian Museum	ditto
3113	Das, Nagendra Nath	Assistant, James Finlay & Co, Ld	1, Clive Street	ditto
3114	Das, Nagendra Nath	Supervisor, Mathematical Instrument Office	15, Wood Street	ditto
3115	Das, Nakul Chandra	Audit Inspector, Port Commissioners' Office	Strand Road	ditto
3116	Das, Nalini Bhusan	Assistant, Bengal Secretariat, Poll (Special) Department	Writers' Buildings	ditto

No.	Names.	Style or calling.	Residence or place of business.	Religion.
3117	Das, Nani Gopal	Clerk, C A O's Office, E I R	E I R House	Hindu
3118	Das, Narendra Nath BSC, BE	Manager, Hindusthan Engineering & Construction Co	10, Hastings Street	ditto
3119	Das, Narendra Nath	Clerk, Ralli Brothers, Ld	16, Hare Street	ditto
3120	Das, Narendra Nath	Assistant, P & O Banking Corporation, Ld	1, Fairlie Place	ditto
3121	Das, Nihar Ranjan, MA	Inspector, License Department, Calcutta Corporation	Municipal Office	ditto
3122	Das, Nilmani	Clerk, Controller of Stores Office, E I R	E I R House	ditto
3123	Das, Nirmal Chandra, MSC	Clerk, Statistical Office, E I R	E I R House	ditto
3124	Das, Nripendra Nath	Clerk, Royal Insurance Co, Ld	26 & 27, Dalhousie Square	ditto
3125	Das, Nritya Lal	Assistant, Balmer, Lawrie & Co, Ld	103, Clive Street	ditto
3126	Das, Panchanon	Assistant, Price Waterhouse, Peat & Co	B-4, Clive Buildings	ditto
3127	Das, Panchu Gopal	Accountant, Houghton Butcher (Eastern), Ld	10, Hungerford Street	ditto
3128	Das, Panchu Gopal	Assistant, Bengal Secretariat, Finance Department	Writers' Buildings	ditto
3129	Das, Panchu Gopal	Assistant, Bengal Secretariat, Political Department	Writers' Buildings	ditto
3130	Das, Parmeshwari	Clerk, C A O's Office, E I R	E I R House	ditto
3131	Das, P B	Assistant, Mackinnon, Mackenzie & Co	8 Strand Road	ditto
3132	Das, Phakir Chandra, I	Clerk, D A G P & T Office	7, Koilaghat Street	ditto
3133	Das, Phakir Chandra, II	Clerk, D A G P & T Office	7, Koilaghat Street	ditto

3134	Das, Phanindra Krishna, BSc	Assistant Analyst, Bengal Public Health Laboratory	Chittaranjan Avenue	ditto
3135	Das, Phanindra Nath	Assistant, Accountant-General's Office, Bengal	Treasury Buildings	ditto
3136	Das, P M	Clerk, Heatley & Gresham, Ld	6, Waterloo Street	ditto
3137	Das, Prabodh Ch	Clerk, Telegraph Check Office	33, Dalhousie Square, South	ditto
3138	Das, Prabodh Kumar	Clerk, D A G P & T Office	7, Koilaghat Street	ditto
3139	Das, Prakash Chandra	Assistant, Brooke Bond (India), Ld	2, Metcalfe Street	ditto
3140	Das, Pramatha Nath	Assistant, Martin & Co	12, Mission Row	ditto
3141	Das, Pramode Kumar	Head Assistant, Income-tax Office	6, Esplanade, East	ditto
3142	Das, Pulin Krishna	Assistant, Geological Survey of India	27, Chowringhee	ditto
3143	Das, Rabindra Nath	Clerk, C O P S's Office, E I R	E I R House	ditto
3144	Das, Radha Shyam	Ledger-keeper, Geo Henderson & Co, Ld	101-1, Clive Street	ditto
3145	Das, Rai Charan, BA	Assistant, Calcutta University	Senate House	ditto
3146	Das, Rakhal Chandra	Assistant, Bird & Co	1-1, Clive Street	ditto
3147	Das, Ramakanta	Ledger-keeper, Geo Henderson & Co, Ld	101-1, Clive Street	ditto
3148	Das, Ramani Mohan	Clerk, Ralli Brothers, Ld	16, Hare Street	ditto
3149	Das, Ramesh Chandra	Clerk, D A G P & T Office	7, Koilaghat Street	ditto
3150	Das, Ramesh Chandra	Clerk, Shaw, Wallace & Co	4, Bankshall Street	ditto
3151	Das, Ramesh Chandra, MA	Assistant, Calcutta University	Senate House	ditto

No.	Names.	Style or calling.	Residence or place of business.	Religion.
3152	Das, Ram Sashi	Clerk, D A G P & T Office	7, Koilaghat Street	Hindu
3153	Das, Rash Bihari, BCom	Clerk, D A G P & T Office	7, Koilaghat Street	ditto
3154	Das, Rasik Chandra	Reviser, Government of India Press	8, Hastings Street	ditto
3155	Das, R N, BA	Manager, Sen & Pandit	Mercantile Buildings	ditto
3156	Das, Rohini Kanta, BSc	Examiner of Accounts, Income-tax Office	3, Government Place, West	ditto
3157	Das, Santos Kumar	Engraver, Engraving Office, Survey of India	13, Wood Street	ditto
3158	Das, Sarada Kanta	Stenographer, The Eastern Bank, Ld	9, Clive Street	ditto
3159	Das, Sarat Chandra	Clerk, C A O's Office, E I R	E I R House	ditto
3160	Das, Sasanka Shekhar, BA	Clerk, D A G P & T Office	7, Koilaghat Street	ditto
3161	Das, Satish Chandra	Assistant, Balmer, Lawrie & Co, Ld	103, Clive Street	ditto
3162	Das, Satish Chandra	Assistant, Royal Insurance Co, Ld	26 & 27, Dalhousie Square	ditto
3163	Das, Satish Chandra	Clerk, D A G P & T Office	7, Koilaghat Street	ditto
3164	Das, Satish Chandra	Assistant, Accountant-General's Office, Bengal	Treasury Buildings	ditto
3165	Das, Satkari, BSc	Sub-Head, C A O's Office, E I R	E I R House	ditto
3166	Das, Satya Charan	Clerk, Harrisons & Crosfield, Ld	6, Church Lane	ditto
3167	Das, Satyacharan	Typist, Anderson, Wright & Co	22, Strand Road	ditto
3168	Das, Satya Kinkar	Clerk, C A O's Office, E I R	E I R House	ditto
3169	Das, Satya Ranjan	Jr Superintendent, Reserve Bank	8, Council House Street	ditto

3170	Das, Shachindra Kumar ..	Inspector for Electric Installation, Calcutta Corporation	Municipal Building	ditto
3171	Das, Shailendra Nath ..	Assistant Accountant, Bengal Provincial Co-operative Bank, Ld	Writers' Buildings	ditto
3172	Das, Shib Chandra, LMS ..	Food Inspector, Calcutta Corporation	79, Cornwallis Street	ditto
3173	Das, Shrish Chandra ..	Clerk, Gillanders, Arbuthnot & Co	8, Clive Street	ditto
3174	Das, Shrish Chandra ..	Clerk, Central Stationery Store	3, Church Lane	ditto
3175	Das, Shrish Chandra, MA ..	Assistant, Accountant-General's Office, Bengal	Treasury Buildings	ditto
3176	Das, Siddheswar ..	Clerk, Telegraph Check Office	33, Dalhousie Square, South	ditto
3177	Das, Sisir Kumar, B E ..	Ove seer, C E's Office, Calcutta Corporation	Municipal Office	ditto
3178	Das, S K ..	Assistant, Imperial Chemical Industries (India), Ld	18, Strand Road	ditto
3179	Das, Srinivas ..	Assistant, Surgeon-General's Office, Bengal	Writers' Buildings	ditto
3180	Das, Subodh Kumar ..	Jr Superintendent, Reserve Bank	8, Council House Street	ditto
3181	Das, Sudhangsu Shekhar, B Sc (Cal), B Eng. (Sheffield)	Overseer, C E's Office, Calcutta Corporation	Municipal Office	ditto
3182	Das, Sudhir Kumar ..	Assistant, Martin & Co	12, Mission Row	ditto
3183	Das, Sudhir Kumar, BSc ..	Assistant Analyst, Bengal Public Health Laboratory	Chittaranjan Avenue	ditto
3184	Das, Surendra Nath ..	Head Clerk, La Martinière	11, Loudon Street	ditto
3185	Das, Surendra Nath ..	Section Holder, Government of India Press	8, Hastings Street	ditto
3186	Das, Surendra Nath ..	Assistant, Presidency College	86-1, College Street	ditto
3187	Das, Suresh Chandra	Clerk, Thos Cook & Son, Ld	4, Dalhousie Square	ditto
3188	Das, Suresh Chandra, BA	Clerk, D A G P & T Office	7, Koilaghat Street	ditto
3189	Das, Sushil Kumar ..	Assistant, Martin & Co	12, Mission Row	ditto
3190	Das, S P, B Sc (Eng, Glasgow)	Assistant, Holmes, Wilson & Co, Ld	Norton Buildings	ditto

No.	Names.	Style or calling.	Residence or place of business.	Religion.
3191	Das, Tarani Charan, BSc	Clerk, D A G P & T Office	7, Koilaghat Street	Hindu
3192	Das, T M	Engineer, Talbot & Co	Tower House, Chowringhee Square	ditto
3193	Das, Upendra Nath	Clerk, Ralli Brothers, Ld	16, Hare Street	ditto
3194	Das, Upendra Nath	Assistant, Macneill & Co	2, Fairlie Place	ditto
3195	Das De, M R	Assistant, Holmes, Wilson & Co, Ld	Norton Buildings	ditto
3196	Das Guha, Sasthi Charan	Clerk, Harrisons & Crosfield, Ld	6, Church Lane	ditto
3197	Das Gupta, Abinash Chandra, BSc	Assistant Analyst, Public Health Laboratory, Bengal	Chittaranjan Avenue	ditto
3198	Das Gupta, A K	Assistant, Steuart & Co, Ld	57, Park Street	ditto
3199	Das Gupta, Amalendu	Journalist, *Statesman*, Ld	Statesman House	ditto
3200	Das Gupta, B C	Assistant Engineer, G E C (India), Ld	Magnet House, Chittaranjan Avenue South	ditto
3201	Das Gupta, Binaya Bhusan, BA	Assistant, Accountant-General's Office, Bengal	Treasury Buildings	ditto
3202	Das Gupta, Binaya Bhusan	Assistant, Commercial Intelligence Deptt India	1, Council House Street	ditto
3203	Das Gupta, Binode Lal, BCom	Lighting Inspector, Calcutta Corporation	Municipal Office	ditto
3204	Das Gupta, Binode Lal	Clerk, D A G P & T Office	7, Koilaghat Street	ditto
3205	Das Gupta, Bipin Bihari	Assistant, Controller's Office, Calcutta University	Senate House	ditto
3206	Das Gupta, Brajendra Bhusan, B.A.	Assistant, Accountant-General's Office, Bengal	Treasury Buildings	ditto
3207	Das Gupta, Debendra Nath	Assistant, Calcutta University	Senate House	ditto
3208	Das Gupta, Dinesh Chandra	Assistant, Bengal Secretariat, P W D	Writers' Buildings	ditto
3209	Das Gupta, Harendra Nath	Assistant, Bengal Secretariat, L S-G Department	Writers' Buildings	ditto
3210	Das Gupta, Hemendra Kumar	Assistant, Martin & Co	12, Mission Row	ditto

3211	Das Gupta, Jitendra Mohan	Food Inspector, Calcutta Corporation	79 Cornwallis Street	ditto
3212	Das Gupta, Jnanendra Kumar	Head Draftsman, Superintending Engineer's Office, Southern Circle, Public Works Department.	3, Government Place, West	ditto
3213	Das Gupta, K K	Inspector of Factories, Bengal	40-1A, Free School Street	ditto
3214	Das Gupta, Kartik Chandra, BA	Superintendent, Registrar's Office, Calcutta University	Senate House	ditto
3215	Das Gupta, Krishna Kanta	Clerk, Calcutta Improvement Trust	5, Clive Street	ditto
3216	Das Gupta, Kshitish Chandra	Assistant Estate Superintendent, Port Commissioners' Office	Strand Road	ditto
3217	Das Gupta, Manaranjan MA	Lecturer, City College	102-1, Amherst Street	ditto
3218	Das Gupta, Manaranjan	Building Inspector, Calcutta Corporation	Municipal Office	ditto
3219	Das Gupta, Manindra	Artist, *Statesman*, Ld	Statesman House	ditto
3220	Das Gupta, Manmohan, BL	Head Assistant, Income-tax Office	Imperial Secretariat Buildings	ditto
3221	Das Gupta, Mati Lal	Head Assistant, Land Revenue Department, Calcutta Collectorate	3, Charnock Place	ditto
3222	Das Gupta, N C, BSc (Eng)	Engineer, Indo-Swiss Trading Co, Ld	2, Church Lane	ditto
3223	Das Gupta, Nani Gopal, B Sc	Assessor, Income-tax Office	3, Government Place, West	ditto
3224	Das Gupta, Nirmal Chandra	Clerk, Engineering Department, Port Commissioners' Office	Strand Road	ditto
3225	Das Gupta, P B, BA	Sub-Head, C A O's Office, E I R	E I R House	ditto
3226	Das Gupta, Prabodh Nath, BA, GDA	Examiner of Accounts, Income-tax Office	3, Government Place, West	ditto
3227	Das Gupta, Prafulla Chandra	Engrg Overseer, Calcutta Corporation	79, Cornwallis Street	ditto
3228	Das Gupta, Pramode Kumar, BA	Clerk, Assessor's Department, Calcutta Corporation	Municipal Office	ditto
3229	Das Gupta, Ramani Mohan	Overseer, Executive Engineer's Office, City Division, P W D	Writers' Buildings	ditto
3230	Das Gupta, Ramesh Chandra	General Superintendent of Agencies, Unique Assurance Co, Ld	10, Canning Street	ditto
3231	Das Gupta, Satish Chandra	Assistant Librarian, Bengal Secretariat Library	Writers' Buildings	ditto
3232	Das Gupta, Shishir Chandra, MA, BL	Assistant, Accountant-General's Office, Bengal	Treasury Buildings	ditto
3233	Das Gupta, Shrish Chandra	Lecturer, Government Commercial Institute	11, Hastings Street	ditto

No.	Names.	Style or calling.	Residence or place of business.	Religion
3234	Das Gupta, Sitanath	Clerk, D A G P & T Office	7, Koilaghat Street	Hindu
3235	Das Gupta, Sudhangsu	Accountant (Sugar Department), K C Thapar & Bros, Ld.	5, Royal Exchange Place	ditto
3236	Das Gupta, Sudhir Chandra, BE, CE	Assistant, Holmes, Wilson & Co, Ld	Norton Buildings	ditto
3237	Das Gupta, Surendra Nath	Cashier, Union Insurance Society of Canton, Ld	8, Clive Street	ditto
3238	Das Gupta, Suresh Chandra	Assistant to Inspector of Messes, Calcutta University	Senate House	ditto
3239	Das Gupta, Suresh Charan	Assistant, Office of the I-G of Police	Writers' Buildings	ditto
3240	Das Gupta, Umesh Chandra, MA	Examiner of Accounts, Income-tax Office	6, Esplanade, East	ditto
3241	Das Gupta, Upendra Mohon	Head Assistant, Office of the Supdtg Engineer, S W Circle	Treasury Buildings	ditto
3242	Das Munshi, Sarat Chandra	Assistant, Commercial Intelligence Department India	1, Council House Street	ditto
3243	Datta, Abhaya Charan	Clerk, D A G P & T Office	7, Koilaghat Street	ditto
3244	Datta, Achyuta Kumar, MA, BL	Professor, Vidyasagar College	39, Sankar Ghose Lane	ditto
3245	Datta, A K	Assistant Bullion-keeper, Calcutta Mint	47, Strand Road	ditto
3246	Datta, Amarendra Narayan	Assistant, Martin & Co	12, Mission Row	ditto
3247	Datta, Ambika Ca	Assistant Cashier, Calcutta Improvement Trust	5, Clive Street	ditto
3248	Datta, Amulya Charan	Assistant, Accountant-General's Office, Bengal	Treasury Buildings	ditto
3249	Datta, Anath Bandhu	Assistant Chemist, Imperial Chemical Industries (India), Ld	18, Strand Road	ditto
3250	Datta, Anath Krishna	Overseer, Executive Engineer's Office, City Division, P W D	Writers' Buildings	ditto
3251	Datta, Anath Nath, BA	Assistant, Accountant-General's Office, Bengal	Treasury Buildings	ditto
3252	Datta, Annada Prasad	Assistant, Accountant-General's Office, Bengal	Treasury Buildings	ditto
3253	Datta, Anukul Chandra	Assistant, James Finlay & Co, Ld	1, Clive Street	ditto
3254	Datta, Anup Krishna	Assistant, Martin & Co	12, Mission Row	ditto
3255	Datta, Apurba Krishna	Clerk, C O P S's Office, E I R	E I R House	ditto
3256	Datta, Ashutos	Reviser, Govt of India Press	8, Hastings Street	ditto

3257	Datta, Baidya Nath	Clerk, Ralli Brothers, Ld	16, Hare Street	ditto
3258	Datta, Bankim Chandra, BA	Assistant, Calcutta University	Senate House	ditto
3259	Datta, B B	Clerk, Accounts Office, Calcutta Mint	47, Strand Road	ditto
3260	Datta, B B, MA	Assistant, General Utilities Co	7, Clive Row	ditto
3261	Datta, Bhabani Charan	Clerk, Ralli Brothers, Ld	16, Hare Street	ditto
3262	Datta, Bhabatosh, MA	Lecturer, Ripon College	24, Harrison Road	ditto
3263	Datta, Bharat Chandra	Eng Overseer, Calcutta Corporation	79, Cornwallis Street	ditto
3264	Datta, Bhola Nath	Clerk, Turner, Morrison & Co, Ld	6, Lyons Range	ditto
3265	Datta, Bhupati Charan	Assistant Head Clerk, Bengal Waterproof Works, Ld	12, Chowringhee	ditto
3266	Datta, Bimal Chandra	Clerk, Burmah Shell Co of India, Ld	Hongkong House	ditto
3267	Datta, Binode Bihari	Clerk, D A G P & T Office	7, Koilaghat Street	ditto
3268	Datta, Binode Bihari, BA	Assistant, Accountant-General's Office, Bengal	Treasury Buildings	ditto
3269	Datta, B K	Clerk, Remington Rand Inc	3, Council House Street	ditto
3270	Datta, Byomkesh	Salesman, George O Penn & Co	22, Chowringhee	ditto
3271	Datta, Chandi Charan	Clerk, D A G P & T Office	7, Koilaghat Street	ditto
3272	Datta, Chandi Charan, BA	Accountant, Calcutta Mineral Supply Co, Ld	31, Jackson Lane	ditto
3273	Datta, Chandra Mohan	Accountant, Calcutta Insurance, Ld	86, Clive Street	ditto
3274	Datta, Charan Das	Assistant, Bengal Chamber of Commerce	2, Clive Street	ditto
3275	Datta, Charu Chandra	Assistant, Accountant-General's Office, Bengal	Treasury Buildings	ditto
3276	Datta, Chuni Lal, BSc	Demonstrator, Vidyasagar College	39, Sanker Ghose Lane	ditto

No.	Names.	Style or calling.	Residence or place of business.	Religion.
3277	Datta, Deba Brata	Clerk, D A G P & T Office	7, Koilaghat Street	Hindu
3278	Datta, Debendra Nath	Assistant, James Finlay & Co, Ld	1, Clive Street	ditto
3279	Datta, Debi Prasad, MA	Assistant, Controller's Office, Calcutta University	Senate House	ditto
3280	Datta, Dharmadas	Assistant, Reserve Bank of India	8, Council House Street	ditto
3281	Datta, Dhirendra Chandra	Assistant, Accountant-General's Office, Bengal	Treasury Buildings	ditto
3282	Datta, Dhirendra Kumar	Assistant, Accountant-General's Office, Bengal	Treasury Buildings	ditto
3283	Datta, Dhirendra Lal, BA	Assistant Cashier, Accountant-General's Office, Bengal	Treasury Buildings	ditto
3284	Datta, Dhirendra Nath	Assistant, Office of the Director of Industries, Bengal	40-1A, Free School Street	ditto
3285	Datta, Dhirendra Nath	Clerk, Imperial Bank of India	3, Strand Road	ditto
3286	Datta, Dhirendra Nath	Assistant, European Association	6, Royal Exchange Place	ditto
3287	Datta, Dhirendra Nath	Overseer, Calcutta Improvement Trust	5, Clive Street	ditto
3288	Datta, Dhirendra Nath	Clerk, Place, Siddons & Gough	6, Lyons Range	ditto
3289	Datta, D N	Clerk, E S's Office, Port Commissioners	Strand Road	ditto
3290	Datta, Durgapada	Clerk, Telegraph Check Office	33, Dalhouse Square, South	ditto
3291	Datta, Fakir Chand	Accountant, License Department, Calcutta Corporation	Municipal Office	ditto
3292	Datta, Girija Bhusan	Clerk, Liverpool & London & Globe Insurance Co, Ld	26, Dalhousie Square	ditto
3293	Datta, Girindra Behari, BL	Assessing Inspector, Calcutta Corporation	Municipal Office	ditto
3294	Datta, Gokul Chandra	Assistant, Excise Commissioner's Office	Writers' Buildings	ditto
3295	Datta, Gokul Chandra	Clerk, Imperial Bank of India	3, Strand Road	ditto
3296	Datta, Gopal Chandra	Invoice Clerk, Geo Henderson & Co, Ld	101-1, Clive Street	ditto
3297	Datta, Gopal Ch, BA	Clerk, D A G P & T Office	7, Koilaghat Street	ditto
3298	Datta, Gopendranath	Assistant, Calcutta Improvement Trust	5, Clive Street	ditto
3299	Datta, Harendra Krishna, BA	Clerk, D A G P & T Office	7, Koilaghat Street	ditto

3300	Datta, Hari Charan	Clerk, Burmah Shell Co of India, Ld	Hongkong House	ditto
3301	Datta, Haridas	Clerk, Shaw, Wallace & Co	4, Bankshall Street	ditto
3302	Datta, Hari Kumar	Overseer, District No. II, Calcutta Corporation	22, Mirzapore Street	ditto
3303	Datta, Hari Mohan	Clerk, Shaw, Wallace & Co	4, Bankshall Street	ditto
3304	Datta, Hariprasad	Clerk, Ralli Brothers, Ld	16, Hare Street	ditto
3305	Datta, H C	Assistant, Guest, Keen, Williams, Ld	7, Council House Street	ditto
3306	Datta, H K	Clerk, P & O Banking Corporation, Ld	1, Fairlie Place	ditto
3307	Datta, Hirendra Mohan	Assistant, Accountant-General's Office, Bengal	Treasury Buildings	ditto
3308	Datta, Indu Bhusan	Audit Inspector, Port Commissioners' Office	Strand Road	ditto
3309	Datta, Jatindra Nath, BA	Assistant, Calcutta University	Senate House	ditto
3310	Datta, Jatindra Nath, BA	Offg Accountant, Accountant-General's Office, Bengal	Treasury Buildings	ditto
3311	Datta, Jatindra Nath, BA	Clerk, D A G P & T Office	7, Koilaghat Street	ditto
3312	Datta, Jiban Krishna	Clerk, Booking Section, Port Commissioner's Office	Strand Road	ditto
3313	Datta, Jitendra Lal	Clerk, C O P S's Office, E I R	E I R House	ditto
3314	Datta, Jogesh Chandra, MA	Assistant, Accountant-General's Office, Bengal	Treasury Buildings	ditto
3315	Datta, Kamala Prasad	Assistant, McLeod & Co	28, Dalhousie Square	ditto
3316	Datta, Kangali Charan	Clerk, D A G P & T Office	7, Koilaghat Street	ditto
3317	Datta, Kartic Chandra, MSc	Senior Electrician, Standard Telephones & Cables, Ld	4, Esplanade, East	ditto
3318	Datta, Karuna Charan	Clerk, National Bank of India, Ld	104, Clive Street	ditto
3319	Datta, Kedarnath	Clerk, Ralli Brothers, Ld	16, Hare Street	ditto
3320	Datta, Khagendra Nath	Stenographer, C A O's Office, E I R	E I R House	ditto
3321	Datta, Kiran Chandra	Assistant, Balmer, Lawrie & Co, Ld	103, Clive Street	ditto

No.	Names.	Style or calling	Residence or place of business.	Religion.
3322	Datta, Kripanath	Book-Keeper, Imperial Tobacco Co of India, Ld	37, Chowringhee	Hindu
3323	Datta, Krishna Ch	Audit Clerk, Calcutta Improvement Trust	5, Clive Street	ditto
3324	Datta, Krishna Chandra	Clerk, D A G P & T Office	7, Koilaghat Street	ditto
3325	Datta, K N	Proprietor, K N Dutt & Co	18, Raja Woodmunt Street	ditto
3326	Datta, Lal Bihari	Clerk, Imperial Bank of India	3, Strand Road	ditto
3327	Datta, Lalit Mohan, MSc, I	Clerk, D A G P & T Office	7, Koilaghat Street	ditto
3328	Datta, Mahendra Lal	Head Draftsman, Engineer's Office, E B R	3, Koilaghat Street	ditto
3329	Datta, Manasa Charan	Assistant, Accounts Department, Calcutta Corporation	Municipal Office	ditto
3330	Datta, Mangobinda	Clerk, Agency Deptt, E B R	3, Koilaghat Street	ditto
3331	Datta, Maniklal, BA	Senior Clerk, Special Officer's Deptt, Calcutta Corporation	Municipal Office	ditto
3332	Datta, Manindra Nath, MSc	Assistant, Zoological Survey of India	Indian Museum	ditto
3333	Datta, Manindra Nath	Building Inspector, Calcutta Corporation	Municipal Office	ditto
3334	Datta, Manmatha Nath, BA	Clerk, Army factory Accounts	6, Esplanade, East	ditto
3335	Datta, Manmatha Nath	Acting Foreman, Government of India Press	8, Hastings Street	ditto
3336	Datta, Manmohan	Assistant, Accountant-General's Office, Bengal	Treasury Buildings	ditto
3337	Datta, Mathura Nath	Clerk, Gillanders, Arbuthnot & Co	8, Clive Street	ditto
3338	Datta, Mrityunjoy	Clerk, D A G P & T Office	7, Koilaghat Street	ditto
3339	Datta, N	Head Master, Central Collegiate School	71-2 A, Cornwallis Street	ditto
3340	Datta, Nabani Mohan	Clerk, Union Insurance Society of Canton, Ld	8, Clive Street	ditto
3341	Datta, Nagendra Nath	Assistant, Senda & Co (India), Ld	135, Canning Street	ditto
3342	Datta, Nalin Bihari	Assistant, K C Thapar & Bros, Ld	5, Royal Exchange Place	ditto
3343	Datta, Nalini Krishna	Assistant, Accountant-General's Office, Bengal	Treasury Buildings	ditto
3344	Datta, Nanak Chand	Clerk, Office of the Controller of Purchase, Indian Stores Department.	6, Esplanade, East	ditto

3345	Datta, Nanda Lal	Assistant, Imperial Library	6, Esplanade, East	ditto
3346	Datta, Nani Gopal, BA	Clerk, D A G P & T Office	7, Koilaghat Street	ditto
3347	Datta, Narendra Chandra	Assistant, McLeod & Co	28, Dalhousie Square	ditto
3348	Datta, Narendra Kumar	Cashier, North British and Mercantile Insurance Co, Ld	101-1, Clive Street	ditto
3349	Datta, Narendra Nath	Assistant Head Clerk, Imperial Tobacco Co of India, Ld	37, Chowringhee	ditto
3350	Datta, Narendra Nath	Assistant, Commercial Intelligence Deptt, India	1, Council House Street	ditto
3351	Datta, Naresh Chandra	Clerk, Burmah Shell Co of India, Ld	Hongkong House	ditto
3352	Datta, Naresh Chandra	Clerk, I G N & Ry Co, Ld	4, Fairlie Place	ditto
3353	Datta, Naresh Nath	Assistant, Office of the Director of Industries, Bengal	40-1A, Free School Street	ditto
3354	Datta, Netye Chand	Assistant Cashier, National Bank of India, Ld	104, Clive Street	ditto
3355	Datta, Nirmal Chandra	Stenographer, Balmer, Lawrie & Co, Ld	103, Clive Street	ditto
3356	Datta, Nitai Charan	Clerk, Turner, Morrison & Co, Ld	6, Lyons Range	ditto
3357	Datta, Nootbehary	Clerk, Imperial Bank of India	3, Strand Road	ditto
3358	Datta, Nripendra Nath	Accounts Clerk, E B R	3, Koilaghat Street	ditto
3359	Datta, Nripendra Nath	Clerk, D A G P & T Office	7, Koilaghat Street	ditto
3360	Datta, Nripendra Nath, MA	Assistant, Office of the Director of Industries, Bengal	40-1A, Free School Street	ditto
3361	Datta, Pannalal	Assistant, Reserve Bank of India	8, Council House Street	ditto
3362	Datta, Phanindra Kumar, MSc, BL	Accountant, Workshops, Electrical Division, P W D	Writers' Buildings	ditto
3363	Datta, Prabhas Chandra	Clerk, Ralli Brothers, Ld	16, Hare Street	ditto
3364	Datta, Prabhas Chandra, BA	Assistant, Bengal Secretariat, Finance Department	Writers' Buildings	ditto
3365	Datta, Prabhas Chandra	Clerk, D A G P & T Office	7, Koilaghat Street	ditto
3366	Datta, Prabodh Chandra	Clerk, D A G P & T Office	7, Koilaghat Street	ditto

No.	Names.	Style or calling.	Residence or place of business.	Religion.
3367	Datta, Prafulla Kumar ..	.. Assistant, Accountant-General's Office, Bengal ..	.. Treasury Buildings	Hindu
3368	Datta, Pramode Kumar, BA	.. Head Clerk, Lighting Department, Calcutta Corporation	.. Municipal Office	ditto
3369	Datta, Pulin Bihari, BSC	.. Divisional Accountant, Accountant-General's Office, Bengal	.. Treasury Buildings	ditto
3370	Datta, Pulin Bihari ..	.. Accountant, American Foreign Insurance Association	.. 8, Clive Street	ditto
3371	Datta, Pulin Chandra, BA	.. Clerk, D A G P & T Office	.. 7, Koilaghat Street	ditto
3372	Datta, Purna Chandra ..	.. Assistant, Mackinnon, Mackenzie & Co	.. 16, Strand Road	ditto
3373	Datta, Rabindra Chandra, BSC	.. Clerk, C A's Office, E I R	.. E I R House	ditto
3374	Datta, Rabindra Krishna, BA	.. Clerk, Treasury Department, Calcutta Corporation ..	.. Municipal Office	ditto
3375	Datta, Rajendra Nath	.. Assistant, Office of the Geological Survey of India ..	.. 27, Chowringhee	ditto
3376	Datta, Raj Krishna ..	.. Assistant, Calcutta Collectorate	.. 3, Charnock Place	ditto
3377	Datta, Ramanath ..	.. Assistant, Senda & Co (India), Ld	.. 135, Canning Street	ditto
3378	Datta, Ramesh Chandra, BA	.. Clerk, Agency Department, E B R	.. 3, Koilaghat Street	ditto
3379	Datta, Ranajoy	.. Stenographer, Office of the Inspector of Schools, Presy Divn	.. 40-1A, Free School Street ..	ditto
3380	Datta, R C ..	.. Assistant Bullion Keeper, Calcutta Mint ..	.. 47, Strand Road	ditto
3381	Datta, Sanyasidas, BSC, BA	.. Head Clerk, Income-Tax Office	.. 3, Government Place, West ..	ditto
3382	Datta, Sarit Nath ..	.. Assistant, Accounts Department, Calcutta Corporation	.. Municipal Office	ditto
3383	Datta, Satish Chandra ..	.. Assistant, Mackinnon, Mackenzie & Co	.. 16, Strand Road	ditto
3384	Datta, Satish Chandra ..	.. Head Assistant (Policy), Unique Assurance Co, Ld	.. 10, Canning Street	ditto
3385	Datta, Satish Chandra, I	.. Assistant, Accountant-General's Office, Bengal ..	.. Treasury Buildings	ditto
3386	Datta, Satish Chandra, II, BA	.. Assistant, Accountant-General's Office, Bengal ..	.. Treasury Buildings	ditto
3387	Datta, Satish Chandra, III, BA	.. Assistant, Accountant-General's Office, Bengal ..	.. Treasury Buildings	ditto
3388	Datta, Satish Chandra ..	.. Head Assistant, Stamp Department, Calcutta Collectorate	.. 3, Charnock Place	ditto
3389	Datta, Satish Chandra	.. Clerk, D A G P & T Office	. 7, Koilaghat Street	ditto

3390	Datta, Satish Chandra ..	Accountant, Blackwood, Bryson & Co, Ld ..	2, Mangoe Lane ..	ditto
3391	Datta, Satish Ch, BA ..	Clerk, Telegraph Check Office ..	33, Dalhousie Square, South ..	ditto
3392	Datta, Satya Charan ..	Cashier, Bengal Club ..	Bengal Club ..	ditto
3393	Datta, Satya Charan, BSc	Clerk, Calcutta Improvement Trust ..	5, Clive Street ..	ditto
3394	Datta, Shankar Nath ..	Assistant, Bengal Secretariat Record Room ..	Writers' Buildings ..	ditto
3395	Datta, Sharat Chandra ..	Clerk, Ralli Brothers, Ld ..	16, Hare Street ..	ditto
3396	Datta, Sharat Chandra, BSc	Assistant Teacher, Collins Institute ..	140, Dharamtala Street ..	ditto
3397	Datta, Sharat Chandra	Assistant, National Insurance Co, Ld ..	7, Council House Street ..	ditto
3398	Datta, Shashi Bhusan ..	Assistant, Mackinnon, Mackenzie & Co ..	16, Strand Road ..	ditto
3399	Datta, Shashi Bhusan, BA	Clerk, Agent's Office, E I R ..	E I R House ..	ditto
3400	Datta, Shibprasanna ..	Engineer, F & C Osler, Ld ..	12, Old Court House Street ..	ditto
3401	Datta, Shishir K ..	Clerk, Telegraph Check Office ..	33, Dalhousie Square, South ..	ditto
3402	Datta, Shivapada ..	Clerk, Place, Siddons & Gough ..	6, Lyons Range ..	ditto
3403	Datta, Shripati ..	Assistant, Mackinnon, Mackenzie & Co ..	16, Strand Road ..	ditto
3404	Datta, Shripati Charan ..	Head Clerk, Bengal Smoke Nuisances Commission ..	3, Charnock Place ..	ditto
3405	Datta, Shrish Chandra ..	Assistant, Reserve Bank of India ..	8, Council House Street ..	ditto
3406	Datta, Shyamlal ..	Assistant, Price, Waterhouse, Peat & Co ..	B-4, Clive Buildings ..	ditto
3407	Datta, S N ..	Accountant, Robert Ingham Clark & Co, Ld ..	2, Clive Row ..	ditto
3408	Datta, Sudeb Chandra, AMEE	Inspector for Electric Installation, Calcutta Corporation ..	Municipal Office ..	ditto
3409	Datta, Sudhindra Nath, BA	Assistant, Accountant-General's Office, Bengal ..	Treasury Buildings ..	ditto
3410	Datta, Sudin Prakash, BA	Assistant, Accountant-General's Office, Bengal ..	Treasury Buildings ..	ditto

No.	Names.	Style or calling.	Residence or place of business.	Religion.
3411	Datta, Sukomal, BA	Sub-Head, C A's Office, E I R	E I R House	Hindu
3412	Datta, Surendra Chandra, MA	Assistant, Commercial Intelligence Department, India	1, Council House Street	ditto
3413	Datta, Sushil Kumar	Assistant, Commercial Intelligence Department, India	1, Council House Street	ditto
3414	Datta, Sushil Kumar	Clerk, Imperial Bank of India	3, Strand Road	ditto
3415	Datta, Sushobhan, MSc	Professor, City College	102-1, Amherst Street	Brahmo
3416	Datta, Tarak Nath, BA	Accountant, Accountant-General's Office, Bengal	Treasury Buildings	Hindu
3417	Datta, Tarak Nath	Stenographer, Bengal Secretariat, Finance Department	Writers' Buildings	ditto
3418	Datta, Tinkari	Assistant, Balmer, Lawrie & Co, Ld	103, Clive Street	ditto
3419	Datta, T P	Assistant, Jessop & Co, Ld	93, Clive Street	ditto
3420	Datta, Umapada	Clerk, C O P S's Office, E I R	E I R House	ditto
3421	Datta Chaudhuri, Makhan Lal	Assistant, The Eastern Bank, Ld	9, Clive Street	ditto
3422	Datta Chaudhuri, Samatul Chandra, BL	Examiner of Accounts, Income-tax Office	3, Government Place, West	ditto
3423	Datta Gupta, Dhirendra Nath	Engineer, Standard Sanitary Agency, Ld	64, Bowbazar Street	ditto
3424	Datta Gupta, Hem Ch	Demonstrator, Presidency College	86-1, College Street	ditto
3425	Datta Gupta, J C	Assistant, Jessop & Co, Ld	93, Clive Street	ditto
3426	Datta Gupta, J L	Traffic Inspector, E B R	3, Koilaghat Street	ditto
3427	Datta Gupta, Kumudini Kanta	Clerk, Ralli Brothers, Ld	16, Hare Street	ditto
3428	Datta Gupta, Satish Chandra, BA	Assistant, Office of the Director of Public Instruction, Bengal	Writers' Buildings	ditto
3429	Datta Ray, Abani Kishore, BSc, BT	Assistant Master, Hare School	87, College Street	ditto
3430	Datta Ray, Dhirendra Nath	Assistant, Accountant-General's Office, Bengal	Treasury Buildings	ditto
3431	Datta Ray, S K	Accountant, C A O's Office, E I R	E I R House	ditto

3432	Daw, Bibhuti Bhusan	Salesman, Greaves, Cotton & Co, Ld	60, Dharamtala Street	ditto
3433	Daw, Binaya Krishna, BSc	Clerk, D A G P & T Office	7, Koilaghat Street	ditto
3434	Daw, Dulal Chandra	Clerk, D A G P & T Office	7, Koilaghat Street	ditto
3435	De, Abani Mohan	Assistant, Superintending Engineer's Office (S Circle), P W D	3, Government Place, West	ditto
3436	De, Akhil Chandra	Accountant, Government of India Press	8, Hastings Street	ditto
3437	De, Akshaya Kumar	Clerk, Shaw, Wallace & Co	4, Bankshall Street	ditto
3438	De, Amarendra Nath	Clerk, Turner, Morrison & Co, Ld	6, Lyons Range	ditto
3439	De, Amarendra Nath (Dr), MB	Sanitary Officer, Calcutta Corporation	22, Mirzapore Street	ditto
3440	De, Amulya Charan	Supvg Surveyor, Calcutta Improvement Trust	5, Clive Street	ditto
3441	De, Amulyadhan, BA, GDA	Examiner of Accounts, Income-tax Office	6, Esplanade, East	ditto
3442	De, Amulyadhan	Clerk, Lloyds Bank, Ld	101-1, Clive Street	ditto
3443	De, Ashutosh	Assistant, Accountant-General's Office, Bengal	Treasury Buildings	ditto
3444	De, Ashutos	Assistant, Indian Association for the Cultivation of Science	210, Bowbazar Street	ditto
3445	De, Atul Krishna	Assistant, Martin & Co	12, Mission Row	ditto
3446	De, Atul Krishna	Clerk, Ralli Brothers, Ld	16, Hare Street	ditto
3447	De, Baidyanath, BA	Assistant, Accountant-General's Office, Bengal	Treasury Buildings	ditto
3448	De, Balai Chand	Assistant, Andrew, Yule & Co, Ld	8, Clive Row	ditto
3449	De, Balai Chand	Inspector, License Department, Calcutta Corporation	Municipal Office	ditto
3450	De, Basudev, BA	Supervisor, Telegraph Check Office	33, Dalhousie Square, South	ditto
3451	De, Batá Krishna	Clerk, D A G P & T Office	7, Koilaghat Street	ditto
3452	De, Beni Madhav	Claims Inspector, E B R	3, Kaylaghat Street	ditto
3453	De, Bhabani Charan	Clerk, Chartered Bank of India, Australia and China	1-1, Clive Street	ditto

No.	Names.	Style or calling.	Residence or place of business.	Religion.
3454	De, Bhagabati Kumar	Assistant, Grahams Trading Co (India), Ld	6, Lyons Range	Hindu
3455	De, Bhupendra Nath	Clerk, D A G P & T Office	7, Koilaghat Street	ditto
3456	De, Binayeshwar	Assistant, Office of the Director of Public Health, Bengal	Writers' Buildings	ditto
3457	De, Bishnu, MA	Lecturer, Ripon College	24, Harrison Road	ditto
3458	De, Bishnupada	Assistant, Commercial Intelligence Deptt, India	1, Council House Street	ditto
3459	De, Bishweswar	Clerk, D A G P & T Office	7, Koilaghat Street	ditto
3460	De, Chandra Shekhar	Assistant, Burn & Co, Ld	12 Misson Row	ditto
3461	De, Debiprasad	Ledger-keeper, Imperial Tobacco Co of India, Ld	37, Chowringhee	ditto
3462	De, Dhirendra Nath, BA	Assistant, Accountant-General's Office, Bengal	Treasury Buildings	ditto
3463	De, Dhirendra Nath	3rd Asstt Hd Clerk, Imperial Tobacco Co of India, Ld	37, Chowringhee	ditto
3464	De, Dhirendra Nath	Assistant, Babcock & Wilcox, Ld	4, Bankshall Street	ditto
3465	De, Dulal Chand, BSc	Assistant Analyst, Bengal Public Health Laboratory	Chittaranjan Avenue	ditto
3466	De, Dunia Lal, MB	Sanitary Officer, Calcutta Corporation	79, Cornwallis Street	ditto
3467	De, Gajendra N	Assistant, Balmer Lawrie & Co, Ld	103, Clive Street	ditto
3468	De, Ghanashyam	Clerk, D A G P & T Office	7, Koilaghat Street	ditto
3469	De, Gokul Ch	Clerk, Telegraph Check Office	33, Dalhousie Square, South	ditto
3470	De, Gora Chand	Clerk, Burmah Shell Co of India, Ld	Hongkong House	ditto
3471	De, Gour Mohan	Chemist and Technologist, Dey & Co	41-B, Clive Street	ditto
3472	De, Gour Pada	Clerk, Chartered Bank of India, Australia and China	1-1, Clive Street	ditto
3473	De, Guha Ram	Sub-Accountant, Grindlay & Co, Ld	6, Church Lane	ditto
3474	De, Haran Chandra, BSc	Demonstrator, Vidyasagar College	39, Shankar Ghose Lane	ditto

3475	De, Harish Chandra	Clerk, Collection Deptt, Calcutta Corporation	Municipal Office	ditto
3476	De, H C	Assistant, P & O Banking Corporation, Ld	1, Fairlie Place	ditto
3477	De, Jatindra Nath	Assistant, Calcutta Improvement Trust	5, Clive Street	ditto
3478	De, Jitendra Krishna	Assistant, Accountant-General's Office, Bengal	Treasury Buildings	ditto
3479	De, Jitendra Nath	Assistant, Controller's Office, Calcutta University	Senate House	ditto
3480	De, Jitendra Nath	Head Draftsman, C E's Office, E I R	E I R House	ditto
3481	De, Jitendra Nath	Assistant, Andrew, Yule & Co, Ld	8, Clive Row	ditto
3482	De, Jogendra Kumar	Assistant, Lionel Edwards, Ld	D-1, Clive Buildings	ditto
3483	De, Jogendra Nath	Assistant, Accountant-General's Office, Bengal	Treasury Buildings	ditto
3484	De, Jyotish Chandra	Assistant, Accountant-General's Office, Bengal	Treasury Buildings	ditto
3485	De, Jyotish Chandra	Head Assistant Cashier, Calcutta Improvement Trust	5, Clive Street	ditto
3486	De, Kali Charan	C O Inspector, Traffic Department, E B R	3, Kaylaghat Street	ditto
3487	De, Kali Kinkar	Clerk, D A G P & T Office	7, Koilaghat Street	ditto
3488	De, Khagendra Nath	Clerk, P S Office, E I R	E I R House	ditto
3489	De, Krishna Das	Assistant, Macneill & Co	2, Fairlie Place	ditto
3490	De, Krishna Das	Clerk, D A G P & T Office	7, Koilaghat Street	ditto
3491	De, Kshetrapada	Assistant, Bengal Secretariat, Appointment Department	Writers' Buildings	ditto
3492	De, Manik Chand	Clerk, Shaw, Wallace & Co	4, Bankshall Street	ditto
3493	De, Manik Lal	Assistant, James Finlay & Co, Ld	1, Clive Street	ditto
3494	De, Manindra Chandra	Assistant, Mercantile Marine Department	15-1, Strand Road	ditto
3495	De, Manindra Nath	Clerk, C O P S Office, E I R	E I R House	ditto

No.	Names.	Style or calling.	Residence or place of business.	Religion.
3496	De, Manmatha Nath, BA	Clerk, D A G P & T Office	7, Koilaghat Street	Hindu
3497	De, Manmatha Nath	Cashier, Begg Dunlop & Co, Ld	2, Hare Street	ditto
3498	De, Manmatha Nath	Accountant, Minimax, Ld	Mercantile Buildings	ditto
3499	De, Matilal	Accountant, American Foreign Insurance Association	8, Clive Street	ditto
3500	De, Mukunda Lal, BA	Clerk, Calcutta Improvement Trust	5, Clive Street	ditto
3501	De, Murari Mohan	Clerk, Burmah Shell Co of India, Ld	Hongkong House	ditto
3502	De, Nagendra Nath	Cashier, Bengal Iron Co, Ld	4, Lyons Range	ditto
3503	De, Nanda Lal	Assistant, Dey & Co	41-B, Clive Street	ditto
3504	De, Nani Gopal	Head Assistant, Pigott Chapman & Co	6, Lyons Range	ditto
3505	De, Nani Lal	Clerk, R Sim & Co, Ld	2, Clive Row	ditto
3506	De, Narayan Chandra	Cashier, Mackenzie, Lyall & Co	5, Mission Row	ditto
3507	De, Narayan Das	Cashier, Royal Insurance Co, Ld	26 & 27, Dalhousie Square	ditto
3508	De, Nilmani	Accountant, P H D, Bengal	3, Charnock Place	ditto
3509	De, Nilmani	Assistant, Accountant-General's Office, Bengal	Treasury Buildings	ditto
3510	De, Nimai Chand	Assistant, Grahams Trading Co (India), Ld	6, Lyons Range	ditto
3511	De, Nirendra Narayan	Clerk, Shaw, Wallace & Co	4, Bankshall Street	ditto
3512	De, Nirmal Chandra, MSC	Demonstrator, Scottish Church College	4, Cornwallis Square	ditto
3513	De, Nirmal Chandra, BSC	Assistant, Accountant-General's Office, Bengal	Treasury Buildings	ditto
3514	De, Nirmal Prakash, MA, BL	Assistant, Calcutta University	Senate House	ditto
3515	De, Nirode Kumar	Clerk, Imperial Bank of India	3, Strand Road	ditto

3516	De, Nitai Chand	Assistant Book-keeper, Imperial Tobacco Co of India, Ld	37, Chowringhee	ditto
3517	De, N N	Clerk, Mackinnon Mackenzie & Co	8, Strand Road	ditto
3518	De, Nripendra Nath	Assistant, Bengal Chemical & Pharmaceutical Works, Ld	31, Chittaranjan Avenue, South	ditto
3519	De, Nritya Gopal	Clerk, Ralli Brothers, Ld	16, Hare Street	ditto
3520	De, Phani Bhushan	Clerk, D A G P & T Office	7, Koilaghat Street	ditto
3521	De, Phani Bhusan	Clerk, Shaw, Wallace & Co	4, Bankshall Street	ditto
3522	De, Phanindra Nath, BA	Assistant Reader, Bengal Library	Writers' Buildings	ditto
3523	De, Prabodh Chandra	Overseer, Western Electrical Division, P W D	Writers' Buildings	ditto
3524	De, Prafulla Kumar	Assistant, Dey & Co	41-B, Clive Street	ditto
3525	De, Pramatha Nath	Sec Head Clerk, C E's Office, E I R	E I R House	ditto
3526	De, Pranabesh Kumar	Assistant, Brooke Bond (India), Ld	2, Metcalfe Street	ditto
3527	De, Pran Gobinda	Clerk, Ralli Brothers, Ld	16, Hare Street	ditto
3528	De, Pravash Chandra, MA	Lecturer, Ripon College	24, Harrison Road	ditto
3529	De, Purna Chandra	Cashier, Planters' Stores & Agency Co, Ld	11, Clive Street	ditto
3530	De, Rabindra Nath	Clerk, D A G P & T Office	7, Koilaghat Street	ditto
3531	De, Ramanath	Head Estimator, Calcutta Improvement Trust	5, Clive Street	ditto
3532	De, Ramesh Chandra	Assistant, Accountant-General's Office, Bengal	Treasury Buildings	ditto
3533	De, Ranendra Krishna	Clerk, Alliance Assurance Co, Ld	2, Hare Street	ditto
3534	De, Rasik Lal	Assistant, Andrew, Yule & Co, Ld	8, Clive Row	ditto
3535	De, Satish Chandra	Clerk, C E S C, Ld	Victoria House	ditto
3536	De, Satish Chandra, MA	Assistant, Accountant-General's Office, Bengal	Treasury Buildings	ditto

No.	Names.	Style or calling.	Residence or place of business.	Religion.
3537	De, Shailendra Krishna ..	.. Assistant, Holmes, Wilson & Co, Ld	.. Norton Buildings ..	.. Hindu
3538	De, Shailendra Kumar, BA	.. Assistant, Commercial Intelligence Department, India	.. 1, Council House Street ..	.. ditto
3539	De, Shailendra Nath ..	.. Assistant, Accountant-General's Office, Bengal ..	.. Treasury Buildings ..	.. ditto
3540	De, Sharat Chandra ..	.. Assistant, Surveyor-General's Office	.. 13, Wood Street ..	.. ditto
3541	De, Sharat Kumar, BA ..	.. Assistant, Surveyor-General's Office	.. 13, Wood Street ..	.. ditto
3542	De, Smritendra Nath, BA	.. Assistant, Accountant-General's Office, Bengal ..	.. Treasury Buildings ..	.. ditto
3543	De, Subal Chandra ..	.. Assistant, Presidency Commissioner's Office ..	.. 3, Charnock Place ..	.. ditto
3544	De, Subodh Chandra ..	.. Cashier, Office of the Controller of Currency ..	.. Treasury Buildings ..	.. ditto
3545	De, Sudhir Chandra ..	.. Assistant, Burn & Co, Ld	.. 12, Mission Row ..	.. ditto
3546	De, Surath Kumar, BA ..	.. Assistant, Accountant-General's Office, Bengal ..	.. Treasury Buildings ..	.. ditto
3547	De, Surendra Mohan (Dr), LMS	.. Sanitary Officer, Calcutta Corporation	.. 22, Mirzapore Street ..	.. ditto
3548	De, Surjya Kanta ..	.. Clerk, D A G P & T Office	.. 7, Koilaghat Street ..	.. ditto
3549	De, T N	.. Assistant, Pigott Chapman & Co	.. 6, Lyons Range ..	.. ditto
3550	De, Tarini Charan ..	.. Cashier, Burmah Shell Co of India, Ld	.. Hongkong House ..	.. ditto
3551	Deb, Arunkumar ..	.. Assistant, Commercial Intelligence Department, India	.. 1, Council House Street	.. ditto
3552	Deb, Ganendra Krishna ..	.. Assistant, Commercial Intelligence Department, India	.. 1, Council House Street	.. ditto
3553	Deb, Harendra Krishna ..	.. Clerk, C E S C, Ld	.. Victoria House ..	.. ditto
3554	Deb, Narendra Kumar ..	.. Surveyor, Calcutta Improvement Trust	.. 5, Clive Street ..	.. ditto
3555	Deb, Phanindra Lal ..	.. Assistant, Accountant-General's Office, Bengal ..	.. Treasury Buildings ..	.. ditto

3556	Deb, Sharat Chandra	Cheeking Assistant, Imperial Bank of India	3, Strand Road	ditto
3557	Deb, Upendra Nath	Clerk, Office of the Controller of Purchase, Indian Stores Department.	6, Esplanade, East	ditto
3558	Deb Mallik, Sirish Chandra, LMS	Sanitary Officer, Calcutta Corporation	79, Cornwallis Street	ditto
3559	Debnath, Chintaharan	Stenographer, Stewart & Co	8, Clive Street	ditto
3560	Deekshither, N Nataraja	Accountant, Bell's Asbestos & Engineering (India), Ld	10, Clive Street	ditto
3561	Dehlavi, Sikandar Khan	P A to General Manager, Eastern Federal Union Insce, Co, Ld	9, Clive Street	Mahomedan
3562	Derasatullah	Assistant, Bengal Secretariat, Revenue Department	Writers' Buildings	ditto
3563	Desai, D C	Assistant Bridge Engineer, E I R	E I R House	Christian
3564	Desai, G R	Assistant, National Insurance Co, Ld	7, Council House Street	Hindu
3565	Desai, Magan Lal Khandubhai, BA	Assistant Secretary, East and West Insurance Co, Ld	37, Strand Road	ditto
3566	Dewan, Safyatulla, BSc	Clerk, D A G P & T Office	7, Koilaghat Street	Mahomedan
3567	Dhar, Avilas Ratan	Cashier, Burmah Shell Co of India, Ld	Hongkong House	Hindu
3568	Dhar, Braja Lal	Clerk, D A G P & T Office	7, Koilaghat Street	ditto
3569	Dhar, Deb Sebak	Clerk, Ralli Brothers, Ld	16, Hare Street	ditto
3570	Dhar, D C	Assistant, Mackinnon, Mackenzie & Co	8, Strand Road	ditto
3571	Dhar, Lakshan Chandra	Assistant, James, Finlay & Co, Ld	1, Clive Street	ditto
3572	Dhar, Madhusudan	Assistant, Jardine Skinner & Co	4, Clive Row	ditto
3573	Dhar, Narendra Nath	Assistant, Accountant-General's Office, Bengal	Treasury Buildings	ditto
3574	Dhar, Prasad Das	Clerk, Imperial Bank of India	3, Strand Road	ditto
3575	Dhar, Pratap Chandra	Clerk, Mackinnon Mackenzie & Co	16, Strand Road	ditto
3576	Dhar, Pyari Mohan	Mg Agent, Incorporated Insurance, Ld	5, Clive Ghat Street	ditto
3577	Dhar, Ram Chandra	Cashier, Jardine, Skinner & Co	4, Clive Row	ditto

No.	Names.	Style or calling.	Residence or place of business.	Religion.
3578	Dhar, Suresh Chandra	Demonstrator, Presidency College	86-1, College Street	Hindu
3579	Dhar, Thakur Das	Assistant, James Finlay & Co, Ld	1, Clive Street	ditto
3580	Dhara, Surendra Nath	Clerk, Telegraph Check Office	33, Dalhousie Square, South	ditto
3581	Doss, Robin	Asstt Curator, Prints, Map Record and Issue Office, Survey of India.	13, Wood Street	Christian
3582	Dubash, M F	Assistant, Burn & Co, Ld	12, Mission Row	Zoroastrian
3583	Dutt, Srish Chandra	Sr Clerk, Reserve Bank of India	8, Council House Street	ditto
3584	Dustoor, Byram Sorabji	Assistant, Ralli Brothers, Ld	16, Hare Street	ditto
	E			
3585	Elias, Syed Md (Maulvi), BA	Assistant, Bengal Secretariat, Appointment Department	Writers' Buildings	Mahomedan
	F			
3586	Faseeh, Abul Huffaz Md	Lecturer, Calcutta Madrassah	19, Wellesley Square	Mahomedan
3587	Fazlur, Rahman Baqui	Lecturer, Calcutta University	Senate House	ditto
3588	Furdonji, Merwanjee	Sr Assistant, Testing Department, C E S C, Ld	Victoria House	Zoroastrian
	G			
3589	Gaffur, Maulvi Abdul	Clerk, Agent's Office, E B R	3, Kaylaghat Street	Mahomedan
3590	Gandhi, Nadir Dhanjishaw	Accountant, Central Bank of India, Ld	10, Lindsay Street	Hindu
3591	Ganeriwalla, Ramkumar	Assistant, Bagla & Co	7, Lyons Range	ditto
3592	Ganguli, Abhayapada, BA	Clerk, D A G P & T Office	7, Koilaghat Street	ditto
3593	Ganguli, Ahibhusan	Assistant, Ludlow Jute Co, Ld	7, Royal Exchange Place	ditto
3594	Ganguli, Amal Chandra (Dr)	Assistant, Mosquito Controlling Office, Calcutta Corporation	Municipal Office	ditto
3595	Ganguli, Amulya Charan	Clerk, Works Department, *Statesman*, Ld	Statesman House	ditto
3596	Ganguli, Anath Bandhu	Assistant, Bengal Secretariat, Appointment Department	Writers' Buildings	ditto
3597	Ganguli, Anil Kumar, BSc	Head Draftsman, Spl Officer's Deptt, Calcutta Corporation	Municipal Office	ditto
3598	Ganguli, Ashutos	Chief Clerk, C E S C, Ld	Victoria House	ditto

3599	Ganguli, Ashutos	Book-keeper, Jardine, Skinner & Co	4, Clive Row	ditto
3600	Ganguli, Ashutos	Assistant, Central Stationery Office	3, Church Lane	ditto
3601	Ganguli, Ashutos, BA	Head Clerk, Executive Engineer's Office, Damodar Division	Treasury Buildings	ditto
3602	Ganguli, Ashutos	Assistant, James, Finlay & Co, Ld	1, Clive Street	ditto
3603	Ganguli, Atul Chandra, BA	Clerk, Assessor's Department, Calcutta Corporation	Municipal Office	ditto
3604	Ganguli, Atul Krishna	Assistant, Macneill & Co	2, Fairlie Place	ditto
3605	Ganguli, B, BSc	Partner, Ganguli & Chatterjea	30, Clive Street	ditto
3606	Ganguli, Bhabatos, MA	Assistant, Bengali Translator's Office	Writers' Buildings	ditto
3607	Ganguli, Bhudeb	Clerk, Imperial Bank of India	3, Strand Road	ditto
3608	Ganguli, Bhupendra Chandra	Clerk, C M E's Office, E I R	E I R House	ditto
3609	Ganguli, Bhupendra Nath BA	S A S Clerk, Army Factory Accounts	6, Esplanade, East	ditto
3610	Ganguli, Bidhu Bhusan	Stenographer, Burmah Shell Co of India, Ld	Hongkong House	ditto
3611	Ganguli, Bihari Lal	Clerk, Turner, Morrison & Co, Ld	6, Lyons Range	ditto
3612	Ganguli, Bijay Krishna	Clerk, C E S C, Ld	Victoria House	ditto
3613	Ganguli, Chandra Nath	Clerk, Royal Insurance Co, Ld	26 & 27, Dalhousie Square	ditto
3614	Ganguli, D	Audit Inspector, Port Commissioners' Office	Strand Road	ditto
3615	Ganguli, D C	Commercial Assistant, Reuters, Ld	7, Hare Street	ditto
3616	Ganguli, Dinabandhu, BA	Reader, Government of India Press	8, Hastings Street	ditto
3617	Ganguli, Durga Prasanna	Clerk, I G N & Ry Co, Ld	Nimtolla Ghat	ditto
3618	Ganguli, Dwijapada, BA	S A S Clerk, Army Factory Accounts	6, Esplanade, East	ditto
3619	Ganguli, Gopi Mohan	Clerk, Telegraph Check Office	33, Dalhousie Square, South	ditto
3620	Ganguli, Harendra Kumar	Clerk, C C M's Office, E I R	E I R House	ditto

No.	Names.	Style or calling.	Residence or place of business.	Religion.
3621	Ganguli, Harendra Lal	Assistant, Alliance Assurance Co, Ld	2, Hare Street	Hindu
3622	Ganguli, Hari Charan	Clerk, Telegraph Check Office	33, Dalhousie Square, South	ditto
3623	Ganguli, Haridas	Lighting Supervisor, Calcutta Corporation	Municipal Office	ditto
3624	Ganguli, Haridas, MSc	Probationer, Chemical Examiner's Department, Bengal	Medical College	ditto
3625	Ganguli, Hari Prasanna	Stenographer, Harrisons and Crosfield, Ld	6, Church Lane	ditto
3626	Ganguli, Heramba Chandra, BA	Assistant, Accountant-General's Office, Bengal	Treasury Buildings	ditto
3627	Ganguli, Indu Bhusan	Accountant, Plummer Bros & Co	5 & 6, Fancy Lane	ditto
3628	Ganguli, Janaki Kanta	Assistant, Lovelock & Lewes	4, Lyons Range	ditto
3629	Ganguli, Jiban Bhusan	Clerk, National Bank of India, Ld	104, Clive Street	ditto
3630	Ganguli, Jiban Krishna	Cashier, Saturday Club	7, Wood Street	ditto
3631	Ganguli, Kanti Ch	Clerk, D A G P & T Office	7, Koilaghat Street	ditto
3632	Ganguli, Kantish Chandra	S A S Clerk, Army Factory Accounts	6, Esplanade, East	ditto
3633	Ganguli, Kedareshwar	Clerk, W T Henley's Telegraph Works Co, Ld	Old Court House Corner	ditto
3634	Ganguli, Krishnadhan	Assistant, Price, Waterhouse, Peat & Co	B-4, Clive Buildings	ditto
3635	Ganguli, Kshirode Mohan, MA	Clerk, Army Factory Accounts	6, Esplanade, East	ditto
3636	Ganguli, Lalit Mohan	Assistant, Accountant-General's Office, Bengal	Treasury Buildings	ditto
3637	Ganguli, Lalit Mohan	Clerk, Telegraph Check Office	33, Dalhousie Square, South	ditto
3638	Ganguli, Manindra Nath	Surveyor and Estimator, Calcutta Corporation	Municipal Office	ditto
3639	Ganguli, Michri Mohan	Clerk, D A G P & T Office	7, Koilaghat Street	ditto

3640	Ganguli, Nagendra Nath ..	Assistant, Accountant-General's Office, Bengal ..	Treasury Buildings ..	ditto
3641	Ganguli, Nani Gopal ..	Assistant, Income-tax Office ..	1, Hare Street ..	ditto
3642	Ganguli, Narendra Nath ..	Clerk, Shaw, Wallace & Co ..	4, Bankshall Street ..	ditto
3643	Ganguli, N N ..	Clerk, Accounts Office, Calcutta Mint ..	47, Strand Road ..	ditto
3644	Ganguli, Panchanan ..	Assistant, Lionel Edwards, Ld ..	D-1, Clive Buildings ..	ditto
3645	Ganguli, Pashupati ..	Accountant, South British Insurance Co, Ld ..	5, Clive Street ..	ditto
3646	Ganguli, Pashupati ..	Clerk, C E S C, Ld ..	Victoria House ..	ditto
3647	Ganguli, Phanindra Nath, MA, GDA	Examiner of Accounts, Income-tax Office ..	1, Hare Street ..	ditto
3648	Ganguli, Prabodh Chandra ..	Assistant, Mackinnon, Mackenzie & Co ..	16, Strand Road ..	ditto
3649	Ganguli, Pramatha Nath ..	Clerk, Central Registery, E I R ..	E I R House ..	ditto
3650	Ganguli, Pramatha Nath ..	Chemical Assistant, Central Stationery Office ..	3, Church Lane ..	ditto
3651	Ganguli, Prantos ..	Assistant, Office of the I-G of Registration, Bengal ..	Writers' Buildings ..	ditto
3652	Ganguli, Prasad Chandra ..	Assistant, Reserve Bank of India ..	8, Council House Street ..	ditto
3653	Ganguli, Preeti Kumar ..	Clerk, Post Audit, Port Commissioners' Office ..	Strand Road ..	ditto
3654	Ganguli, R ..	Assistant, Mackinnon, Mackenzie & Co ..	8, Strand Road ..	ditto
3655	Ganguli, Rajendra Nath ..	Clerk, Gillanders, Arbuthnot & Co ..	8, Clive Street ..	ditto
3656	Ganguli, Rajendra Nath ..	Assistant, Office of the Supdg Engineer, Central Circle, P W D. ..	Victoria House, Chowringhee Square..	ditto
3657	Ganguli, Rajendra Nath ..	Assistant, Explosives Office ..	1, Council House Street ..	ditto
3658	Ganguli, Sasthidas, BA ..	Assistant, Calcutta University ..	Senate House ..	ditto
3659	Ganguli, Shailendra Nath ..	Assistant Reporter, Secretary's Department, Calcutta Corporation	Municipal Office ..	ditto
3660	Ganguli, Shamlal ..	Clerk, Burmah Shell Co of India, Ld ..	Hongkong House ..	ditto

No.	Names.	Style or calling.	Residence or place of business.	Religion.
3661	Ganguli, Shibnath	Assistant, Office of the Supdg Engineer, S Circle, P W D	3, Government Place, West	Hindu
3662	Ganguli, Shreedam Ch	Clerk, Turner, Morrison & Co, Ld	6, Lyons Range	ditto
3663	Ganguli, Shripati, BL	Clerk, C R E's Office, P & A Circle	Fort William	ditto
3664	Ganguli, S K	Assistant, Barry & Co	2, Fairlie Place	ditto
3665	Ganguli, S N	Assistant, Jessop & Co, Ld	93, Clive Street	ditto
3666	Ganguli, S R	Clerk, C E S C, Ld	Victoria House	ditto
3667	Ganguli, Subodh Chandra	Head Clerk, Imperial Bank of India	3, Strand Road	ditto
3668	Ganguli, Subodh Kumar	Clerk, C A O's Office, E I R	E I R House	ditto
3669	Ganguli, Sudhangsu Kumar, B SC, GDA	Examiner of Accounts, Income-tax Office	3, Government Place, West	ditto
3670	Ganguli, Sudhir Ch	Head Clerk, Traffic Department, E B R	3, Kaylaghat Street	ditto
3671	Ganguli, Sudhir Ranjan	Clerk, Accounts Office, E I R	E I R House	ditto
3672	Ganguli, Surendra Nath	Book-keeper, Imperial Tobacco Co of India, Ld	37, Chowringhee	ditto
3673	Ganguli. Surendra Nath	Head Assistant, Presidency College	86-1, College Street	ditto
3674	Ganguli, Sushil Kumar	Clerk, D A G P & T Office	7, Koilaghat Street	ditto
3675	Ganguli, Tarakali	Assistant, Legislative Department, Bengal	Council House	ditto
3676	Ganguli, Tarakdas	Head Clerk, Traffice Department, E B R	3, Koilaghat Street	ditto
3677	Ganguli, Tarak Nath	Clerk, Telegraph Check Office	33, Dalhousie Square, South	ditto
3678	Ganguli, Tulsi Lochan	Stenographer, Bengal Secretariat, Finance Department	Writers' Buildings	ditto
3679	Ganguli, Umapati	Assistant, Superintending Engineer's Office, Central Circle, P W D	Victoria House, Chowringhee Square	ditto
3680	Ganguli, Upendra Nath	Clerk, Telegraph Check Office	33, Dalhousie Square, South	ditto
3681	Ganguli, Upendra Nath, BA	S A S Clerk, Army Factory Accounts	6, Esplanade, East	ditto

3682	Garg, Balmukund	P A to the Mg Agents, National Cement Mines & Industries, Ld.	10, Clive Row	ditto	
3683	Ghatak, Akshaya Kumar	Clerk, Office of the Chief Mining Engineer, Railway Board	1, Council House Street	ditto	
3684	Ghatak, Bibhuti Prasanna, BA	Lecturer, Government Commercial Institute	11, Hastings Street	ditto	
3685	Ghatak, Jyotish Chandra, MA	Lecturer, Ripon College	24, Harrison Road	ditto	
3686	Ghatak, Kshetra Mohan	2nd Assistant Head Clerk, Imperial Tobacco Co of India, Ld	37, Chowringhee	ditto	
3687	Ghatak, Lalit Mohan	Clerk, Ralli Brothers, Ld	16, Hare Street	ditto	
3688	Ghatak, Manmohan	Clerk, Burmah Shell Co of India, Ld	Hongkong House	ditto	
3689	Ghatak, Nagendra Nath	Hd Clerk, Ex Engineer's Office, Western Electrical Dn, P W D	Writers' Buildings	ditto	
3690	Ghatak, Nakuleswar	Clerk, Post Audit, Port Commissioners' Office	Strand Road	ditto	
3691	Ghatak. S M	Inspector, Oriental Government Security Life Assurance Co, Ld	2, Clive Row	ditto	
3692	Ghatak, Sudin Chandra	Assistant, Accountant-General's Office, Bengal	Treasury Buildings	ditto	
3693	Ghosha, Ajatsatru	Dy Cashier, Chartered Bank of India, Australia and China	1-1, Clive Street	ditto	
3694	Ghosal, Ashutos	Assistant, Commercial Intelligence Department	1, Council House Street	ditto	
3695	Ghosal, Atul Krishna	Head Clerk, Income-tax Office	6, Esplanade, East	ditto	
3696	Ghosal, Bankim Chandra	Assistant, Sun Life of Canada	12, Dalhousie Square, East	ditto	
3697	Ghosal, B D	Assistant, Barry & Co	2, Fairlie Place	ditto	
3698	Ghosal, Bepin Behari	Assistant, Accountant-General's Office, Bengal	Treasury Buildings	ditto	
3699	Ghosal, Bhupati Charan, BA	Head Clerk, Income-tax Office	3, Government Place, West	ditto	
3700	Ghosal, Bibhuti Bhusan	Assistant, McLeod & Co	28, Dalhousie Square	ditto	
3701	Ghosal, Bijaya Krishna	Accountant, Accountant-General's Office, Bengal	Treasury Buildings	ditto	
3702	Ghosal, Binaya Krishna	Steno-typist, W T Henley's Telegraph Works Co, Ld	Old Court House Corner	ditto	
3703	Ghosal, Bishnupada	Clerk, D A G P & T Office	7, Koilaghat Street	ditto	

No	Names.	Style or calling.	Residence or place of business.	Religion.
3704	Ghosal, Charu Chandra ..	.. Section-holder, Government of India Press ..	.. 8, Hastings Street ..	.. Hindu
3705	Ghosal, Charu Pada ..	.. Clerk, C A O's Office, E I R	.. E I R House ..	.. ditto
3706	Ghosal, Dinanath ..	.. Head Clerk, Tagore Raj Estate	.. Tagore Castle ..	.. ditto
3707	Ghosal, Hari Charan ..	.. Assistant, Burn & Co, Ld	.. 12, Mission Row ..	.. ditto
3708	Ghosal, Jatindranath ..	.. Assistant, Sun Life of Canada	.. 12, Dalhousie Square, East	.. ditto
3709	Ghoshal, Jiban Chandra	.. Clerk, D A G P & T Office	.. 7, Koilaghat Street ..	.. ditto
3710	Ghosal, Jitendra Mohan ..	.. Assistant, Martin & Co	.. 12, Mission Row ..	.. ditto
3711	Ghosal, Jogendra Mohan	.. Clerk, R Sim & Co, Ld	.. 2, Clive Row ..	.. ditto
3712	Ghosal, Kali Krishna ..	.. Assistant, Income-tax Office	.. 3, Government Place, West	.. ditto
3713	Ghosal, Kishori Mohan ..	.. Clerk, Traffic Department, E B R	.. 3, Kaylaghat Street ..	.. ditto
3714	Ghosal, Kshirode Gopal ..	.. Assistant, Mackinnon, Mackenzie & Co	.. 16, Strand Road ..	.. ditto
3715	Ghosal, Madhusudan, MA..	.. Head Clerk, Income-tax Office	.. 1, Hare Street ..	.. ditto
3716	Ghosal, Nani Gopal ..	.. Clerk, C A O's Office, E I R	.. E I R Office ..	.. ditto
3717	Ghosal, N N ..	.. Assistant, Oriental Govt Security Life Assurance Co, Ld	.. 2, Clive Row ..	.. ditto
3718	Ghosal, Nripendra Nath ..	.. Assistant, Andrew, Yule & Co, Ld	.. 8, Clive Row ..	.. ditto
3719	Ghosal, Panchu Gopal, BSC, BT	.. Head Master, Sanskrit Collegiate School ..	.. College Square ..	.. ditto
3720	Ghosal, Phani Bhusan ..	.. Clerk, Chief Auditor's Office, E I R	.. E I R House ..	.. ditto
3721	Ghosal, Prafulla Chandra	.. Clerk, Calcutta Improvement Trust	.. 5, Clive Street ..	.. ditto
3722	Ghosal, Shailendra Nath	.. Accountant and Cashier, J H Fenner & Co, Ld ..	.. Mercantile Buildings ..	.. ditto

3723	Ghosal, Shibdas	Assistant, Andrew Yule & Co, Ld	8, Clive Row	ditto
3724	Ghosal, Sudhan Krishna	Cashier, Government of India Press	8, Hastings Street	ditto
3725	Ghosal, Sudhangshu Kumar, BA	Clerk, Lloyds Bank, Ld	101-1, Clive Street	ditto
3726	Ghose, Abanimohan, BA	Assistant, Office of the Director of Industries, Bengal	40-1A, Free School Street	ditto
3727	Ghose, Abodh Gopal	Assistant Book-keeper, Royal Calcutta Turf Club	11, Russel Street	ditto
3728	Ghose, A K	Assistant, G E C (India), Ld	Magnet House, Chittaranjan Avenue, South.	ditto
3729	Ghose, Amal Chandra, BA	Assistant, Calcutta University	Senate House	ditto
3730	Ghose, Amarendra Nath	Accounts Clerk, Ex Engineer's Office, Damodar Division, PWD	Treasury Buildings	ditto
3731	Ghose, Amarendra Nath	Head Assistant, Office of the Director of Public Health, Bengal	Writers' Buildings	ditto
3732	Ghose, Amarendra Nath	Professor, Bangabasi College	25-1, Scott Lane	ditto
3733	Ghose, Amarendra Nath	Clerk, C E S C, Ld	Victoria House	ditto
3734	Ghose, Amar Nath, BA	Teacher, City School	13, Mirzapur Street	Brahmo
3735	Ghose, Amrita Lal	Assistant, Central Forms Store	166, Dharamtala Street	Hindu
3736	Ghose, Amrita Lal	Stenographer, Williamson, Magor & Co	4, Mangoe Lane	ditto
3737	Ghose, Amulya Ratan	Clerk, D A G P & T Office	7, Koilaghat Street	ditto
3738	Ghose, A N	Clerk, Calcutta Mint	47, Strand Road	ditto
3739	Ghose, Anadi Chandra	Assistant, Calcutta University	Senate House	ditto
3740	Ghose, Anadi Nath	Clerk, D A G P & T Office	7, Koilaghat Street	ditto
3741	Ghose, Ananta Nath	Assistant, Accountant-General's Office, Bengal	Treasury Buildings	ditto
3742	Ghose, Anil Chandra	Stenographer, Mather & Platt, Ld	7, Hare Street	ditto
3743	Ghose, Anil Krishna	Ledger-keeper, Geo Henderson & Co, Ld	101-1 Clive Street	ditto

No.	Names.	Style or calling.	Residence or place of business.	Religion.
3744	Ghose, Anil Kumar, BA	Assistant, Accountant-General's Office, Bengal	Treasury Buildings	Hindu
3745	Ghose, Anil Kumar, BA	Store-Keeper, Stores Department, Calcutta Corporation	32-7, Beadon Street	ditto
3746	Ghose, Annada Prasad	Clerk, Telegraph Check Office	33, Dalhousie Square, South	ditto
3747	Ghose, Annada Prasad	Accounts Clerk, E B R	3, Koilaghat Street	ditto
3748	Ghose, Annada Prasad	Clerk, D A G P & T Office	7, Koilaghat Street	ditto
3749	Ghose, Arabinda, MA, GDA	Inspector Surveyor, Incomte-ax Office	3, Government Place, West	ditto
3750	Ghose, Ardhendu	Clerk, Traffic Department, E B R	3, Koilaghat Street	ditto
3751	Ghose, Ardhendushekhar, BSC	Salesman, Dodge & Seymour, Ld	Tower House, Chowringhee Square	ditto
3752	Ghose, Ashutos	Assistant, Office of the Private Secy to H E the Governor of Bengal.	Government House	ditto
3753	Ghose, Ashutos	Assistant, Indian Stores Department (Inspection)	6, Esplanade, East	ditto
3754	Ghose, Aswini Kumar	Clerk, Telegraph Check Office	33, Dlhousie Square, South	ditto
3755	Ghose, A T	Assistant, Guest, Keen, Williams, Ld	7, Council House Street	ditto
3756	Ghose, Badrica Nath	Clerk, D A G P & T Office	7, Koilaghat Street	ditto
3757	Ghose, Baidyanath	Chief Clerk, *Statesman*, Ld	Statesman House	ditto
3758	Ghose, Balai Chand, BSC	Professor, Bangabasi College	25-1, Scott Lane	ditto
3759	Ghose, Bamacharan	Assistant, Accountant-General's Office, Bengal	Treasury Buildings	ditto
3760	Ghose, Bamapada	Clerk, Shaw, Wallace & Co	4, Bankshall Street	ditto
3761	Ghose, Banamali	Assistant, Accounts Department, Calcutta Corporation	Municipal Office	ditto
3762	Ghose, Bankim Chandra	Clerk, D A G P & T Office	7, Koilaghat Street	ditto

3763	Ghose, Basanta Kumar, BA	Assistant, Accounts Department, Calcutta Corporation	Municipal Office	ditto
3764	Ghose, Batakrishna	Clerk, Shaw, Wallace & Co	4, Bankshall Street	ditto
3765	Ghose, Batakrishna	Instructor, Calcutta University	Senate House	ditto
3766	Ghose, B B	Assistant, Mackinnon, Mackenzie & Co	16, Strand Road	Christian
3767	Ghose, B B	Clerk, Burmah-Shell Co of India, Ld	Hongkong House	Hindu
3768	Ghose, Bhabanath	Assistant, McLeod & Co	28, Dalhousie Square	ditto
3769	Ghose, Bhupati Bhusan	Assistant, Reserve Bank of India	8, Council House Street	ditto
3770	Ghose, Bhupendra Lal	Clerk, Calcutta Improvement Trust	5, Clive Street	ditto
3771	Ghose, Bhupendra Nath	2nd Clerk, Chemical Examiner's Department, Bengal	Medical College	ditto
3772	Ghose, Bhupendra Nath	Clerk, Royal Calcutta Turf Club	11, Russel Street	ditto
3773	Ghose, Bhupesh Chandra	Clerk, D A G P & T Office	7, Koilaghat Street	ditto
3774	Ghose, Bibhuti Bhusan	Head Clerk, Stores Department, E B R	3, Koilaghat Street	ditto
3775	Ghose, Bijaya Chandra	Archæological Overseer	Indian Museum	ditto
3776	Ghose, Bijaya Krishna	Head Clerk, Fire Department, Jardine, Skinner & Co	4, Clive Row	ditto
3777	Ghose, Binaya Krishna	Clerk, C E's Office, E I R	E I R House	ditto
3778	Ghose, Binode Bihari	Clerk, Place, Siddons & Gough	6, Lyons Range	ditto
3779	Ghose, Binode Bihari	Assistant, Bengal Chemical and Pharmaceutical Works, Ld	31, Chittaranjan Avenue, South	ditto
3780	Ghose, Binode Bihari	Clerk, C C M's Office, E I R	E I R House	ditto
3781	Ghose, Binode Lal	Assistant, Reserve Bank of India	8, Council House Street	ditto
3782	Ghose, Birendra Nath	Head Clerk, Calcutta Corporation, Dist I	79, Cornwallis Street	ditto
3783	Ghose, Birendra Nath	Clerk, Calcutta University	Senate House	ditto
3784	Ghose, B K, BA	Cashier, Britannia Biscuit Co, Ld	Stephen House	ditto
3785	Ghose, B K	Clerk, Remington Rand Inc	3, Council House Street	ditto

No.	Names.	Style or calling.	Residence or place of business.	Religion.
3786	Ghose, B N	Assistant Bullion-keeper, Calcutta Mint	47, Strand Road	Hindu
3787	Ghose, Chandi Charan	Assistant, Royal Insurance Co, Ld	26 &27, Dalhousie Square	ditto
3788	Ghose, Chandi Charan	Assistant, Bird & Co	1-1, Clive Street	ditto
3789	Ghose, Chitta Ranjan	Clerk D A G P & T Office	7, Koilaghat Street	ditto
3790	Ghose, D B	Clerk, Accounts Office, Calcutta Mint	47, Strand Road	ditto
3791	Ghose, D C	Assistant, Steuart & Co, Ld	57, Park Street	ditto
3792	Ghose, Debendra Nath	Education Assistant, Presidency Commissioner's Office	3, Charnock Place	ditto
3793	Ghose, Debendra Nath	Assistant, Accountant-General's Office, Bengal	Treasury Buildings	ditto
3794	Ghose, Dhirendra Nath	Clerk, Shaw, Wallace & Co	4, Bankshall Street	ditto
3795	Ghose, Dhirendra Nath	Head Clerk, Chemical Examiner's Department, Bengal	Medical College	ditto
3796	Ghose, Dhirendra Nath (III)	Clerk, Telegraph Check Office	33, Dalhousie Square, South	ditto
3797	Ghose, Dibakar, BSc	Clerk, Assessor's Department, Calcutta Corporation	Municipal Office	ditto
3798	Ghose, D N	Deputy Accountant, Calcutta Mint	47, Strand Road	ditto
3799	Ghose, D N	Assistant Bullion-keeper, Calcutta Mint	47, Strand Road	ditto
3800	Ghose, D N	Clerk, Remington Rand, Inc	3, Council House Street	ditto
3801	Ghose, Durgadas, BA	Assistant, Accountant-General's Office, Bengal	Treasury Buildings	ditto
3802	Ghose, Dwijendra Nath	Clerk, Collection, Port Commissioners' Office	Strand Road	ditto
3803	Ghose, Dwipendra Nath, MSc	Assistant, Accountant-General's Office, Bengal	Treasury Buildings	ditto
3804	Ghose, G	Assistant, Jessop & Co, Ld	93, Clive Street	ditto
3805	Ghose, Gadadhar	Assistant, Income-tax Office	1, Hare Street	ditto
3806	Ghose, Gadadhar Chandra	Clerk, Imperial Bank of India	3, Strand Road	ditto

3807	Ghose, Gangadhar	Assistant, Accountant-General's Office, Bengal	Treasury Buildings	ditto
3808	Ghose, Girindra Nath	Assistant, Halley Bros, Ld	7, Canning Street	ditto
3809	Ghose, Gopal Krishna	Assistant, Commercial Intelligence Department, India	1, Council House Street	ditto
3810	Ghose, G K	Sr Accountant, Accountant-General's Office, Bengal	Treasury Buildings	ditto
3811	Ghose, Gostha Bihari	Head Clerk, General Department, Birla Brothers, Ld	8, Royal Exchange Place	ditto
3812	Ghose, Haran Chandra	Stenographer, Indian School Supply Depôt	Chittaranjan Avenue, South	ditto
3813	Ghose, Harendra Krishna	Stenographer, W T Henley & Telegraph Works Co, Ld	Old Court House Corner	ditto
3814	Ghose, Harendra Nath, BA	Accounts, Clerk, E B R	3, Koilaghat Street	ditto
3815	Ghose, Hari Charan, MA	Professor, Bangabasi College	25-1, Scott Lane	ditto
3816	Ghose, Hari Charan	Clerk, Martin & Co	12, Mission Row	ditto
3817	Ghose, Haridas	Clerk, D A G P & T Office	7, Koilaghat Street	ditto
3818	Ghose, Haridas	Assistant, Bengal Secretariat, Poll (Special) Deptt	Writers' Buildings	ditto
3819	Ghose, Haridas	Assistant, Central Forms Store	166, Dharamtala Street	ditto
3820	Ghose, Haridhan	Clerk, Alliance Assurance Co, Ld	2, Hare Street	ditto
3821	Ghose, Haripada	Assistant, Accountant-General's Office, Bengal	Treasury Buildings	ditto
3822	Ghose, Haripada	Assistant, Office of the Director of Industries, Bengal	40-1A, Free School Street	ditto
3823	Ghose, Haripada, BA	Assistant, Commercial Intelligence Department India	1, Council House Street	ditto
3824	Ghose, Harishankar	Assistant, Reserve Bank of India	8, Council House Street	ditto
3825	Ghose, Harish Chandra, BA	Assistant, Office of the Director of Industries, Bengal	40-1A, Free School Street	ditto

No	Name.	Style or calling.	Residence or place of business.	Religion.
3826	Ghose, Hem Chandra, BA	Assistant, Accountant-General's Office, Bengal	Treasury Buildings	Hindu
3827	Ghose, Hiralal	Assistant, Bengal Secretariat, Revenue Department	Writers' Buildings	ditto
3828	Ghose, Hiran Kumar	Assistant, Accountant-General's Office, Bengal	Treasury Buildings	ditto
3829	Ghose, Hrisikesh	Clerk, Ralli Brothers, Ld	16, Hare Street	ditto
3830	Ghose, Indra Narayan	Assistant, Office of the Controller of Currency	Treasury Buildings	ditto
3831	Ghose, Jadu Gopal, BSC, BL	Sub-Head, Statistical Office, E I R	E I R House	ditto
3832	Ghose, Jagat Chandra	Assistant, Macneill & Co	2, Fairlie Place	ditto
3833	Ghose, Jamini Mohan, BL	Clerk, Calcutta Improvement Trust	5, Clive Street	ditto
3834	Ghose, Jatindra Lal	Assistant, Surgeon-General's Office, Bengal	Writers' Buildings	ditto
3835	Ghose, Jatindra Mohan	Assistant, Accountant-General's Office, Bengal	Treasury Buildings	ditto
3836	Ghose, Jatindra Mohan, MA	Professor, Vidyasagar College	39, Shankar Ghose Lane	ditto
3837	Ghose, Jatindra Nath	Chief Clerk, Union Insurance Society of Canton, Ld	8, Clive Street	ditto
3838	Ghose, Jatindra Nath	Assistant, Bengal Secretariat, Political Department	Writers' Buildings	ditto
3839	Ghose, Jatindra Nath	Assistant, Macneill & Co	2, Fairlie Place	ditto
3840	Ghose, Jatindra Prasad	Assistant, Accountant-General's Office, Bengal	Treasury Buildings	ditto
3841	Ghose, Jitendra Nath, BL	Assessor, Income Tax Office	3, Government Place, West	ditto
3842	Ghose, Jitendra N	Assistant, Grahams Trading Co (India), Ld	6, Lyons Range	ditto

3843	Ghose, Jitendra Nath ..	Assistant, Bengal Secretariat, Revenue Department ..	Writers' Buildings ..	ditto
3844	Ghose, Jitendra Nath ..	Clerk, C M E's Office, E I R ..	E I R House ..	ditto
3845	Ghose, Jnanendra Chandra	Head Assistant, Civil Veterinary Department ..	Writers' Buildings ..	ditto
3846	Ghose, Jnanendra Nath ..	Head Assistant, Office of the I-G of Police ..	Writers' Buildings ..	ditto
3847	Ghose, Jnanendra Nath ..	Head Clerk, Mills Department, Jardine, Skinner & Co	4, Clive Row ..	ditto
3848	Ghose, Jogesh Chandra ..	Clerk, Shaw, Wallace & Co ..	4, Bankshall Street ..	ditto
3849	Ghose, Jogesh Chandra ..	Clerk, E B R, Traffic Department ..	3, Koilaghat Street ..	ditto
3850	Ghose, Jyotish Chandra BA, GDA	Examiner of Accounts, Income-tax Office ..	6, Esplanade, East ..	ditto
3851	Ghose, Jyotish Chandra ..	Assistant, Accountant-General's Office Bengal ..	Treasury Buildings ..	ditto
3852	Ghose, Jyotish Chandra ..	Clerk, Telegraph Check Office ..	33, Dalhousie Square, South ..	ditto
3853	Ghose, Jyotish Chandra ..	Clerk Royal Insurance Co, Ld ..	26 & 27, Dalhousie Square ..	ditto
3854	Ghose, Kalidas ..	Assistant, Accountant-General's Office, Bengal ..	Treasury Buildings ..	ditto
3855	Ghose, Kali Kinkar ..	Assistant, Accountant-General's Office, Bengal ..	Treasury Buildings ..	ditto
3856	Ghose, Kali Pada ..	Clerk, Martin & Co ..	12, Mission Row ..	ditto
3857	Ghose, Kalipada ..	Broker, David Sassoon & Co, Ld ..	4, Lyons Range ..	ditto
3858	Ghose, Kanai Lal ..	Head Assistant, Sec II, Accounts Department, Calcutta Corporation	Municipal Office ..	ditto
3859	Ghose, Kanai Lal ..	Assistant, Accountant-General's Office, Bengal ..	Treasury Buildings ..	ditto
3860	Ghose, Kangali Charan ..	Clerk, Book Section, Port Commissioners' Office ..	Strand Road ..	ditto
3861	Ghose, Kanti Chandra ..	Senior Reporter, Bengal Legislative Council ..	Council House ..	ditto
3862	Ghose, Khagendra Nath, BA	Assessing Inspector, Calcutta Corporation ..	Municipal Office ..	ditto
3863	Ghose, Khagendra Nath ..	Head Ref Clerk, Bengal Secretariat, Finance Department	Writers' Buildings ..	ditto
3864	Ghose, Kiran Chandra ..	Journalist, *Statesman*, Ld ..	Statesman House ..	ditto

No.	Name.	Style or calling.	Residence or place of business.	Religion.
3865	Ghose, Kiran Chandra ..	.. Assistant, Mackinnon, Mackenzie & Co	16, Strand Road	Hindu.
3866	Ghose, Krishna Dhan ..	.. Clerk, C O S Office, E I R	E I R House	ditto
3867	Ghose, Krishna Dhan, BL	.. Clerk, D A G P & T Office	7, Koilaghat Street	ditto
3868	Ghose, Krishna Pada, MSC	.. Demonstrator, Scottish Church College	4, Cornwallis Square	ditto
3869	Ghose, Kshitish Chandra..	.. Clerk, Alliance Assurance Co, Ld	2, Hare Street	ditto
3870	Ghose, Kumar Krishna ..	.. Assistant, Royal Calcutta Turf Club	11, Russell Street	ditto
3871	Ghose, Kumud Bandhu, BL	.. Clerk, D A G P & T Office	7, Koilaghat Street	ditto
3872	Ghose, Kumud Nath ..	.. Assistant, Bird & Co	1-1, Clive Street	ditto
3873	Ghose, Kunja Bihari, BA..	.. Assistant, Accountant-General's Office, Bengal	Treasury Buildings	ditto
3874	Ghose, Lal Bihari ..	.. Accounts Clerk, E B R	3, Koilaghat Street	ditto
3875	Ghose, Lalit Kumar	.. Clerk, Pre-Audit, Port Commissioners' Office	Strand Road	ditto
3876	Ghose, L M ..	.. Cashier, Oriental Govt Security Life Assurance Co, Ld ..	2, Clive Row	ditto
3877	Ghose, Madhabi Kanta, BSC	.. Assistant, Agriculture and Industries Department, Bengal ..	Writers' Buildings	ditto
3878	Ghose, Madhusudan ..	.. Assistant, Office of the Inspector-General of Registration, Bengal	Writers' Buildings	ditto
3879	Ghose, Makhan Lal ..	.. Assistant, Accounts Deptt, Calcutta Corporation	Municipal Office	ditto
3880	Ghose, Makhan Lal ..	.. Clerk, Royal Insurance Co, Ld	26 & 27, Dalhousie Square ..	ditto
3881	Ghose, Manarajan, BA ..	.. Assistant, Bengal Secretariat, P W D	Writers' Buildings	ditto
3882	Ghose, Manibhusan ..	.. Clerk, Imperial Bank of India	3, Strand Road	ditto
3883	Ghose, Manick Lal ..	.. Clerk, Imperial Bank of India	3, Strand Road	ditto
3884	Ghose, Manindra Nath ..	.. Clerk, Office of Superintending Engineer, Presidency Circle ..	Writers' Buildings	ditto
3885	Ghose, Manindra Nath ..	.. Clerk, D A G P & T Office	7, Koilaghat Street	ditto
3886	Ghose, Manmatha Nath ..	.. Clerk, Book Section, Port Commissioners' Office	Strand Road	ditto

3887	Ghose, Manmatha Nath ..	Assistant, Government of India Press ..	8, Hastings Street ..	ditto
3888	Ghose, Manmohan ..	Assistant, Agriculture and Industries Department, Bengal ..	Writers' Buildings ..	ditto
3889	Ghose. Manmohan ..	Assistant, Reserve Bank of India ..	8, Council House Street ..	ditto
3890	Ghose, Manmohan, BA ..	Assistant Headmaster, Maharaja Cossimbazar, Polytechnic Institute.	1 & 3, Nandalal Bose Lane	ditto
3891	Ghose, Mati Lal ..	Clerk, Burmah Shell Co of India, Ld ..	Hongkong House ..	ditto
3892	Ghose, M N ..	Assistant, Bengal Secretariat Record Room ..	Writers' Buildings ..	Christian
3893	Ghose, Mohini Mohan ..	Assistant, Office of the Inspector-General of Registration, Bengal	Writers' Buildings ..	Hindu
3894	Ghose, N ..	Head Clerk, Sutton & Sons, Ld ..	35, Park Mansions ..	ditto
3895	Ghose, Nagendra Kumar ..	Sub-Head, Accounts Department, E B R ..	3, Koilaghat Street ..	ditto
3896	Ghose, Nagendra Nath, MA (II) ..	Clerk, D A G P & T Office ..	7, Koilaghat Street ..	ditto
3897	Ghose, Nagendra Nath, BSc (III) ..	Clerk, D A G P & T Office ..	7, Koilaghat Street ..	ditto
3898	Ghose, Nalin Bihari ..	Clerk, Grindlay & Co, Ld ..	6, Church Lane ..	ditto
3899	Ghose, Nalini Kanta ..	Assistant, Ludlow Jute Co, Ld ..	7, Royal Exchange Place	ditto
3900	Ghose, Nalini Kanta ..	Clerk, Telegraph Check Office ..	33, Dalhousie Square, South	ditto
3901	Ghose, Nalini Mohan ..	Head Clerk and Accountant, The Bengal Waterproof Works, Ld ..	12, Chowringhee ..	ditto
3902	Ghose, Nalini Nath ..	Jr Reporter, Bengal Legislative Council ..	Council House ..	ditto
3903	Ghose, Nalini Nath ..	Surveyor, Calcutta Improvement Trust .	5, Clive Street ..	ditto
3904	Ghose, Nalini Ranjan ..	Clerk, Martin & Co ..	12, Mission Row ..	ditto
3905	Ghose, Nanda Lal, MSc ..	Lecturer, Ripon College ..	24, Harrison Road ..	ditto
3906	Ghose, Nanda Lal ..	Clerk, D A G P & T Office ..	7, Koilaghat Street ..	ditto
3907	Ghose, Nani Gopal, MA ..	Assessing Inspector, Calcutta Corporation ..	Municipal Office ..	ditto
3908	Ghose, Nani Gopal, BA ..	Assistant, Bengal Secretariat, Finance Department ..	Writers' Buildings ..	ditto
3909	Ghose, Narayan Chandra	Accountant, Oriental Trading Co ..	84-A, Clive Street ..	ditto

No.	Names.	Style or calling	Residence or place of business.	Religion.
3910	Ghose, Narendra Krishna	Ledger-keeper, Bombay Co, Ld	19, British Indian Street	Hindu
3911	Ghose, Narendra Krishna	Chief Clerk, Office of the Geological Survey of India	27, Chowringhee	ditto
3912	Ghose, Narendra Nath, BA	Assistant, Commercial Intelligence Department, India	1, Council House Street	ditto
3913	Ghose, Narendra Nath	Assistant, Mackinnon, Mackenzie & Co	16, Strand Road	ditto
3914	Ghose, Nibaran Chandra	Surveyor and Valuer, Land Acquisition Office	5, Bankshall Street	ditto
3915	Ghose, Nihar Ranjan, BA	Divisional Accountant, Accountant-General's Office, Bengal	Treasury Buildings	ditto
3916	Ghose, Niranjan	Head Assistant, Income-tax Office	Imperial Secretariat Buildings	ditto
3917	Ghose, Nirendra Prasad	Stenographer, Office of the Director of Public Instruction, Bengal	Writers' Buildings	ditto
3918	Ghose, Nirmal Chandra	Assistant, Commercial Intelligence Department, India	1, Council House Street	ditto
3919	Ghose, Nirmal Chandra, BSc	Assistant, Botanical Survey of India	Indian Museum	ditto
3920	Ghose, Nirmal K	Assistant, Roberts McLean & Co, Ld	101, Clive Street	ditto
3921	Ghose, Nirmal Ratan	Clerk, Agent's Office, E I R	E I R House	ditto
3922	Ghose, Nirode Chandra	Clerk, D A G P & T Office	7, Koilaghat Street	ditto
3923	Ghose, Nirode Gopal	Clerk, Royal Calcutta Turf Club	11, Russel Street	ditto
3924	Ghose, Nitai Charan	Clerk, D A G P & T Office	7, Koilaghat Street	ditto
3925	Ghose, Nitai Charan	Assistant, F W Heilgers & Co	1-1, Clive Street	ditto
3926	Ghose, N R	Audit Inspector, Port Commissioners' Office	Strand Road	ditto
3927	Ghose, Panchanan, BL	Assistant, Accounts Department, Calcutta Corporation	Municipal Office	ditto
3928	Ghose, Panchanan	Clerk, Imperial Bank of India	3, Strand Road	ditto
3929	Ghose, Panchanan, BA	Teacher, New Indian School	5-A, Kasi Bose Lane	ditto

3930	Ghose, Panchnanan, BA	Clerk, D A G P & T Office	7, Koilaghat Street	ditto
3931	Ghose, Panchu Gopal	Store-keeper, Balmer Lawrie & Co, Ld	103, Clive Street	ditto
3932	Ghose, Pannalal, BSc	Assistant, Accountant-General's Office, Bengal	Treasury Buildings	ditto
3933	Ghose, Paresh Nath	Assistant, Bengal Secretariat, Accounts Department	Writers' Buildings	ditto
3934	Ghose, P C	Accountant, Government Shipping Office	15-1, Strand Road	ditto
3935	Ghose, Phakir Chandra, MA	Assistant, Commercial Intelligence Deptt, India	1, Council House Street	ditto
3936	Ghose, Phanindra Nath	Clerk, Central Forms Store	166, Dharamtala Street	ditto
3937	Ghose, Phani Bhusan	Clerk, Kilburn & Co	4, Fairlie Place	ditto
3938	Ghose, Phanindra Nath	Clerk, C E S C, Ld	Victoria House	ditto
3939	Ghose, Phelaram	Assistant, Reserve Bank of India	8, Council House Street	ditto
3940	Ghose, P M	Assistant, The Apcar Collieries, Ld	2, Fairlie Place	ditto
3941	Ghose, P N, MA	Lecturer, Islamia College	8, Wellesley Street	ditto
3942	Ghose, Prabodh Chandra	Assistant, Commercial Intelligence Department, India	1, Council House Street	ditto
3943	Ghose, Prabodh Chandra	Assistant, Indian Stores Department (Inspection)	6, Esplanade, East	ditto
3944	Ghose, Prafulla Kumar, BA	Assistant, Board of Revenue, Bengal	Writers' Buildings	ditto
3945	Ghose, Pramatha Bhusan	Assistant, Bengal Secretariat, Irrigation Department	Writers' Buildings	ditto
3946	Ghose, Prasad Kumar	Sub-Head, Accounts Office, E B R	3, Koilaghat Street	ditto
3947	Ghose, Pravas Chandra	Assistant, Office of the Director of Industries, Bengal	40-1A, Free School Street	ditto
3948	Ghose, Pravas Chandra	Engineer, F & C Osler, Ld	12, Old Court House Street	ditto
3949	Ghose, Pravas Chandra, MA	Lecturer, Vidyasagar College	39, Shankar Ghose Lane	ditto

No.	Names	Style or calling	Residence or place of business.	Religion.
3950	Ghose, Purna Chandra ..	.. Artist, *Statesman*, Ld	Statesman House	Hindu
3951	Ghose, Rabindra Nath ..	.. Clerk, Imperial Bank of India	3, Strand Road	ditto
3952	Ghose, Radha Binode ..	.. Clerk, Shaw, Wallace & Co	4, Bankshall Street	ditto
3953	Ghose, Radhika Mohan ..	.. Head Assistant, Income-tax Office	6, Esplanade, East	ditto
3954	Ghose, Raicharan, BA, BT	.. Assistant Master, Hare School	87, College Street	ditto
3955	Ghose, Rajendra Nath ..	.. Assistant, Commercial Intelligence Department, India ..	1, Council House Street	ditto
3956	Ghose, Raj Krishna ..	.. Head Mechanic, Govt of India Press	8, Hastings Street	ditto
3957	Ghose, Rakhal Chandra	.. Senior Clerk, Office of the Controller of Purchase, Indian Stores Department	6, Esplanade, East	ditto
3958	Ghose, Ramesh Chandra ..	.. R D Inspector, E B R	3, Kaylaghat Street	ditto
3959	Ghose, Ramgopal ..	.. Clerk, D A G P & T Office	7, Koilaghat Street	ditto.
3960	Ghose, Ramjitendra ..	.. Stenographer, Indian Stores Department (Inspection) ..	6, Esplanade, East	ditto
3961	Ghose, Ram Saran ..	.. Clerk, D A G P & T Office	7, Koilaghat Street	ditto
3962	Ghose, S ..	.. Audit-Inspector, Port Commissioners' office	Strand Road	ditto
3963	Ghose, Sadhan Chandra	.. Clerk, D A G P & T Office	7, Koilaghat Street	ditto
3964	Ghose, Sajani Mohan ..	.. Assistant, Accounts Department, Calcutta Corporation ..	Municipal Office	ditto
3965	Ghose, Samul Kristo ..	.. Assistant, Bird & Co	1-1, Clive Street	ditto
3966	Ghose, Santos Kumar ..	.. Ledger-keeper, Geo Henderson & Co, Ld	101-1, Clive Street	ditto
3967	Ghose, Santos Kumar, BSC	.. Assistant, Accountant-General's Office, Bengal	Treasury Buildings	ditto
3968	Ghose, Santos Kumar ..	.. Assistant, Macneill & Co	2, Fairlie Place	ditto

3969	Ghose, Sashanka Shekhar	Assistant, Calcutta University	Senate House	ditto
3970	Ghose, Satish Chandra	Clerk, Licensed Measurers Department	2, Clive Street	ditto
3971	Ghose, Satish Chandra, BL	Assistant. Bengal Secretariat, Finance Department	Writers' Buildings	ditto
3972	Ghose, Satish Chandra	Clerk, I G N & Ry Co, Ld	4, Fairlie Place	ditto
3973	Ghose, Satish Chandra	Chief Clerk & Cashier, Mather & Platt, Ld	7, Hare Street	ditto
3974	Ghose, Satish Chandra	Clerk, C O P S Office, E I R	E I R House	ditto
3975	Ghose, Satish Chandra	Assistant, Martin & Co	12, Mission Row	ditto
3976	Ghose, Satyasharan	Assistant, Accountant-General's Office, Bengal	Treasury Buildings	ditto
3977	Ghose, Shachindra Krishna	Salesman, The Eastern Merchants	14, Old Court House Lane	ditto
3978	Ghose, Shailendra Kumar	Head Clerk, Imperial Bank of India	3, Strand Road	ditto
3979	Ghose, Sharat Chandra	Clerk, C A O's Office, E I R	E I R House	ditto
3980	Ghose, Sharat Chandra	Clerk, C O P S Office, E I R	E I R House	ditto
3981	Ghose, Sharat Chandra	Clerk, D A G P & T Office	7, Koilaghat Street	ditto
3982	Ghose, Sharat Chandra	Assistant, Reserve Bank of India	8, Council House Street	ditto
3983	Ghose, Sharat Chandra	Assistant, Income-tax Office	1, Hare Street	ditto
3984	Ghose, Shishir Kumar, B COM	Assistant, Accountant-General's Office, Bengal	Treasury Buildings	ditto
3985	Ghose, Shital Das	Assistant, Accountant-General's Office, Bengal	Treasury Buildings	ditto
3986	Ghose, Shital Prasad	Assistant, Bird & Co	1-1, Clive Street	ditto

No.	Names.	Style or calling.	Residence or place of business.	Religion.
3987	Ghose, Shiva Das	Assistant, Royal Insurance Co, Ld	26 & 27, Dalhousie Square	Hindu
3988	Ghose, Shiva Kinkar	Assistant, Reserve Bank of India	8, Council House Street	ditto
3989	Ghose, Shivaprasanna	Assistant, Accountant-General's Office, Bengal	Treasury Buildings	ditto
3990	Ghose, Shovamaya, MA	Professor, Vidyasagar College	39, Sankar Ghose Lane	ditto
3991	Ghose, Shrish Krishna	Clerk, Place, Siddons & Gough	6, Lyons Range	ditto
3992	Ghose, Shyam Kinkar	Clerk, I G N & Ry Co, Ld	4, Fairlie Place	ditto
3993	Ghose, Shyamapada	Clerk, Imperial Bank of India	3, Strand Road	ditto
3994	Ghose, S K	Assistant, Hoare Miller & Co	5, Fairlie Place	ditto
3995	Ghose, S N	Assistant Inspector of Factories, Bengal	40-1A, Free School Street	ditto
3996	Ghose, S N	Head Clerk, G E C (India), Ld	Magnet House, Chittaranjan Avenue, South	ditto
3997	Ghose, Subodh Kumar	Clerk, Imperial Bank of India	3, Strand Road	ditto
3998	Ghose, Subodh Kumar	Assistant, Accounts Department, Calcutta Corporation	Municipal Office	ditto
3999	Ghose, Sudarshan	Clerk, Telegraph Check Office	33, Dalhousie Square, South	ditto
4000	Ghose, Sudeb Chandra, BA	Assistant, Brooke Bond (India), Ld	2, Metcalfe Street	ditto
4001	Ghose, Sudhindra Nath, BSc	Accountant, Metro-Goldwyn-Mayer, India, Ld	5, Chowringhee Road	ditto
4002	Ghose, Sudhir Chandra, BA	Clerk, D A G P & T Office	7, Koilaghat Street	ditto
4003	Ghose, Sudhir Chandra, BSc	Laboratory Assistant, Imperial Chemical Industries (India), Ld.	18, Strand Road	ditto
4004	Ghose, Sudhir Chandra	Head Assistant, Emigration Office	8, Dalhousie Square, East	ditto
4005	Ghose, Sudhir Kumar	Estimator, Executive Engineer's Office, Hijli Division, P W D	Writers' Buildings	ditto

4006	Ghose, Sudhir Kumar	Clerk, Shaw, Wallace & Co	4, Bankshall Street		ditto
4007	Ghose, Suhrid Krishna, MA	Teacher, Bangabasi College School	19, Scott Lane		ditto
4008	Ghose, Suprasanna	Assistant, National Insurance Co, Ld	7, Council House Street		ditto
4009	Ghose, Supravash	Clerk, Imperial Bank of India	3, Strand Road		ditto
4010	Ghose, Suranjan, BA	Head Clerk, Income-Tax Office	3, Government Place, West		ditto
4011	Ghose, Surendra Kumar	Assistant, Accounts Department, Calcutta Corporation	Municipal Office		ditto
4012	Ghose, Surendra Nath, BA	Clerk, D A G P & T Office	7, Koilaghat Street		ditto
4013	Ghose, Surendra Nath	Clerk, Telegraph Check Office	33, Dalhousie Square, South		ditto
4014	Ghose, Surendra Nath (No. I)	Sub-Head, Accounts Office, E I R	E I R House		ditto
4015	Ghose, Surendra Nath (No. II)	Clerk, C A O's Office, E I R	E I R House		ditto
4016	Ghose, Surendra Nath, MA	Assistant, Calcutta University	Senate House		ditto
4017	Ghose, Surendra Nath	Assistant, Office of the Director of Industries, Bengal	40-1A, Free School Street		ditto
4018	Ghose, Suresh Ch	Clerk, Booking Section, Port Commissioners' Office	Strand Road		ditto
4019	Ghose, Suresh Chandra, BSc, BL	Demonstrator, Scottish Church College	4, Cornwallis Square		ditto
4020	Ghose, Suresh Chandra	Head Book-keeper, Royal Calcutta Turf Club	11, Russell Street		ditto
4021	Ghose, Sushil Chandra	Costing Clerk, Lipton, Ld	9, Weston Street		ditto
4022	Ghose, Tapesh Chandra	Clerk, Burmah Shell Co of India, Ld	Hongkong House		ditto
4023	Ghose, Tarakinkar	Stenographer & Junior Council Reporter	Writers' Buildings		ditto
4024	Ghose, Tarapada	Assistant, Bengal Secretariat, P W D	Writers' Buildings		ditto
4025	Ghose, Trijan Mohan, BA	Assistant, Accountant-General's Office, Bengal	Treasury Buildings		ditto
4026	Ghose, Tulsi Charan	Book-keeper, Harrisons & Crosfield, Ld	6, Church Lane		ditto
4027	Ghose, Tulsi Charan	Clerk, D A G P & T Office	7, Koilaghat Street		ditto

No.	Names.	Style or calling.	Residence or place of business.	Religion.
4028	Ghose, Tulsi Narayan	Assistant, Accountant-General's Office, Bengal	Treasury Buildings	Hindu
4029	Ghose, Uma Shankar, BA (Hons)	Clerk, D A G P & T Office	7, Koilaghat Street	ditto
4030	Ghose, Umesh Chandra	Building Inspector, Calcutta Corporation	Municipal Office	ditto
4031	Ghose, Upendra Nath	Assistant, Commercial Intelligence Department, India	1, Council House Street	ditto
4032	Ghose, Upendra Nath	Accountant, Longmans Green & Co, Ld	6, Old Court House Street	ditto
4033	Ghose, Upendra Nath	Assistant, Andrew Yule & Co, Ld	8, Clive Row	ditto
4034	Ghose, Usa Nath	Estimator, P H D, Bengal	3, Charnock Place	ditto
4035	Goel, Kailash Narain	Head Clerk, G E's Office, Calcutta Division, Fort William	Fort William	ditto
4036	Gopalan, A	Assistant, Andrew Yule & Co, Ld	8, Clive Street	ditto
4037	Gopinath, Kodangi S	Clerk, Burmah Shell Co of India, Ld	Hongkong House	ditto
4038	Gora, M C	Assistant, Shaw, Wallace & Co	4, Bankshall Street	Zoroastrian
4039	Goswami, B D	Clerk, Accounts Office, Calcutta Mint	47, Strand Road	Hindu
4040	Goswami, Bijay Kali, MSC	Lecturer, Vidyasagar College	39, Shankar Ghose Lane	ditto
4041	Goswami, Dibakar	Clerk, Prudential Assurance Co, Ld	Clive Buildings	ditto
4042	Goswami, Gouri Shankar, BA	Superintendent, Tagore Raj Estate	Tagore Castle	ditto
4043	Goswami, Hira Lal	Assistant, Central Forms Store	166, Dharamtala Street	ditto
4044	Goswami, Kumudananda	Overseer, District No. II, Calcutta Corporation	22, Mirzapore Street	ditto
4045	Goswami, Narayan Krishna	Head Assistant, B R Section, Port Commissioners' Office	Strand Road	ditto
4046	Goswami, Nerod Behari	Clerk, Martin & Co	12, Mission Row	ditto
4047	Goswami, Prabodh Chandra	Clerk, Place, Siddons & Gough	6, Lyons Range	ditto
4048	Goswami, Pulin Bihari	Head Clerk, Collection Department, Calcutta Corporation	Municipal Office	ditto

4049	Goswami, Purnananda, BA	Assistant, Bengal Secretariat, Finance Department	Writers' Buildings	ditto
4050	Goswami, Radha Kissen	Assistant, Birla Brothers, Ld	8, Royal Exchange Place	ditto
4051	Goswami, Radha Krishna	Assistant, Pearl Assurance Co, Ld	8, Clive Street	ditto
4052	Goswami, Sanat Kumar, BA	Clerk, D A G P & T Office	7, Koilaghat Street	ditto
4053	Goswami, Santos Kumar	Assistant, Accountant-General's Office, Bengal	Treasury Buildings	ditto
4054	Goswami, Satchidananda	Clerk, Royal Insurance Co, Ld	26 & 27, Dalhousie Square	ditto
4055	Goswami, Shachijiban, BSc	Assistant, Accountant-General's Office, Bengal	Treasury Buildings	ditto
4056	Goswami, Subodh Ranjan	Superintendent, Home Savings, Central Bank of India, Ld	100, Clive Street	ditto
4057	Goswami, Surendra Nath	Clerk, C A O's Office, E I R	E I R House	ditto
4058	Govindraj, Narayan	Artist, *Statesman*, Ld	Statesman House	ditto
4059	Guha, Akshaya Kumar	Assistant, Office of the I-G of Police	Writers' Buildings	ditto
4060	Guha, Anathbandhu	Head Assistant, Income-tax Office	6, Esplanade, East	ditto
4061	Guha, Dhirendra Nath, BA	Assistant, Calcutta University	Senate House	ditto
4062	Guha, G K	Assistant, Office of the Inspector-General of Prisons, Bengal	Writers' Buildings	ditto
4063	Guha, Hari Charan	Assistant, McLeod & Co	28, Dalhousie Square	ditto
4064	Guha, Kali Mohan, BA	Assessing Inspector, Calcutta Corporation	Municipal Office	ditto
4065	Guha, Kali Prasanna	Assistant, Income-tax Office	6, Esplanade, East	ditto
4066	Guha, Nagendra Nath	Clerk, C O P S Office, E I R	E I R House	ditto
4067	Guha, Prafulla Kumar	Stenographer and Senior Council Reporter	Writers' Buildings	ditto
4068	Guha, Pramoderanjan	Assistant, Worthington Simpson, Ld	10, Clive Street	ditto
4069	Guha, Shailendra Nath	Clerk, Burmah Shell Co of India, Ld	Hongkong House	ditto
4070	Guha, S N, BSc, GDA	Inspector Surveyor, Income-Tax Office	3, Government Place, West	ditto

No.	Names.	Style or calling	Residence or place of business.	Religion.
4071	Guha, Sushil Chandra, MSc	Clerk, D A G P & T Office	7, Koilaghat Street	Hindu
4072	Guha, Upendra Chandra, BA	Clerk, Assessor's Department, Calcutta Corporation	Municipal Office	ditto
4073	Guha, Upendra Nath	Head Clerk, Deva Dutt Saraogi & Son	63, Ezra Street	ditto
4074	Guha Ray, Hemendra Nath	Stock Verifier, Accounts Department, Calcutta Corporation	Municipal Office	ditto
4075	Guin, Debendra Nath	Assistant, Bengal Secretariat, P W D	Writers' Buildings	ditto
4076	Gupta, Ajoy Kumar	Stenographer, Explosives Office	1, Council House Street	ditto
4077	Gupta, Akshaya Kumar	Examiner of Accounts, Income-tax Office	3, Government Place, West	ditto
4078	Gupta, Amiya Kumar	Clerk, Prudential Assurance Co, Ld	Clive Buildings	ditto
4079	Gupta, Amiya Kumar	Superintendent, Elec & Mech, G E's Office	Fort William	ditto
4080	Gupta, Annada Prasad	Assistant, Accountant-General's Office, Bengal	Treasury Buildings	ditto
4081	Gupta, Ashutos	Clerk, D A G P & T Office	7, Koilaghat Street	ditto
4082	Gupta, Atul Chandra	Head Assistant, Sec III, Accounts Department, Calcutta Corporation.	Municipal Office	ditto
4083	Gupta, Bata Krishna	Stenographer, Bengal Telephone Corporation, Ld	8, Hare Street	ditto
4084	Gupta, Bihari Lal	Clerk, Turner, Morrison & Co, Ld	6, Lyons Range	ditto
4085	Gupta, Bijaya Krishna	Clerk, D A G P & T Office	7, Koilaghat Street	ditto
4086	Gupta, Bijaya Prasanna	Assistant, Bird & Co	1-1, Clive Street	ditto
4087	Gupta, Bireshwar	Assistant, Office of the Director of Public Instruction, Bengal	Writers' Buildings	ditto
4088	Gupta, Dasarathi, BSc	Assistant, Geological Survey of India	27, Chowringhee	ditto
4089	Gupta, Dasarathi	Clerk, Bengal Chamber of Commerce	2, Clive Street	ditto
4090	Gupta, Debendra Nath	Assistant, Factory Inspection Department, Bengal	40-1A, Free School Street	ditto
4091	Gupta, Dhirendra Nath	Assistant, Bengal Secretariat, Political Department	Writers' Buildings	ditto

4092	Gupta, D N	Assistant, Burn & Co, Ld	12, Mission Row	ditto
4093	Gupta, Ganesh Chandra	Assistant, P & O Banking Corporation, Ld	1, Fairlie Place	ditto
4094	Gupta, Gopal Chandra	Assistant, Office of the Controller of Currency	Treasury Buildings	ditto
4095	Gupta, Gopal Chandra	Clerk, Agent's Office, E I R	E I R House	ditto
4096	Gupta, Hari Charan	Assistant, Brooke Bond (India), Ld	2, Metcalfe Street	ditto
4097	Gupta, Haridas	Clerk, Jardine, Skinner & Co	4, Clive Row	ditto
4098	Gupta, Hazarilal	General Assistant, The Bharat Insurance Co, Ld	Chittaranjan Avenue	ditto
4099	Gupta, Hemanta K	Assistant, Grahams Trading Co (India), Ld	6, Lyons Range	ditto
4100	Gupta, Himangshu Kumar	Assistant, Commercial Intelligence Department, India	1, Council House Street	ditto
4101	Gupta, Hirendra Nath	Assistant, Lionel Edwards, Ld	D-1, Clive Buildings	ditto
4102	Gupta, Jadu Nath	Assistant, Calcutta Improvement Trust	5, Clive Street	ditto
4103	Gupta, Jagannath	Sole Proprietor, Jagannath Gupta & Co	7-B, Clive Row	ditto
4104	Gupta, Jatindra Nath	Head Draftsman, Engineer's Office, E B R	3, Kaylaghat Street	ditto
4105	Gupta, Jiban Krishna	Clerk, C O P S Office, E I R	E I R House	ditto
4106	Gupta, Jyotish Chandra	Record-keeper, Engineer's Office, E B R	3, Kaylaghat Street	ditto
4107	Gupta, Kalidas	Clerk, National City Bank of New York	4, Clive Street	ditto
4108	Gupta, Lakshan Chandra	Clerk, Chartered Bank of India, Australia & China	1-1, Clive Street	ditto
4109	Gupta, Mrityunjoy	Accounts Clerk, E D Sassoon & Co, Ld	101, Clive Street	ditto
4110	Gupta, Nagendra Nath	Assistant, Mackinnon, Mackenzie & Co	16, Strand Road	ditto
4111	Gupta, Nagendra Nath	Assistant Reporter, Secretary's Department, Calcutta Corporation	Municipal Office	ditto

No.	Names.	Style or calling.	Residence or place of business.	Religion.
4112	Gupta, Nandalal	Assistant, Excise Commissioner's Office, Bengal	Writers' Buildings	Hindu
4113	Gupta, Narendra Nath	Clerk, D A G P & T Office	7, Koilaghat Street	ditto
4114	Gupta, Niranjan	Clerk, Calcutta Improvement Trust	5, Clive Street	ditto
4115	Gupta, Nripendra Nath	Clerk, Harrisons & Crosfield, Ld	6, Church Lane	ditto
4116	Gupta, Paresh Chandra	Stenographer, Bengal Telephone Corporation, Ld	8, Hare Street	ditto
4117	Gupta, Prabhat Kumar	Engineer, F & C Osler, Ld	12, Old Court House Street	ditto
4118	Gupta, Prem Sagar	Assistant Engineer, Asbestos Cement, Ld	135, Canning Street	ditto
4119	Gupta, Priyanath	Examiner of Accounts, Income-tax Office	3, Government Place, West	ditto
4120	Gupta, Purnendu, BA	Assistant, Bengal Secretariat, Police Department	Writers' Buildings	ditto
4121	Gupta, Santos Kumar	Stenographer, Plummer Bros & Co	5 & 6, Fancy Lane	ditto
4122	Gupta, Satya Charan	Clerk, D A G P & T Office	7, Koilaghat Street	ditto
4123	Gupta, Satya Charan	Clerk, Agent's Office, E B R	3, Koilaghat Street	ditto
4124	Gupta, Satya Ranjan	Clerk, C O P S Office, E I R	E I R House	ditto
4125	Gupta, Satyendra Nath	Inspector, License Department, Calcutta Corporation	Municipal Office	ditto
4126	Gupta, Shailaja Prasad	Assistant, Reed Ward & Co	6, Lyons Range	ditto
4127	Gupta, Shishir Kumar, BA	Head Assistant, Income-tax Office	3, Government Place, West	ditto

4128	Gupta, Shishir Kumar, BA	Clerk, D A G P & T Office	7, Koilaghat Street	ditto
4129	Gupta, Shyamsundar Lal	Clerk, C C M's Office, E I R	E I R House	ditto
4130	Gupta, S N	Head Clerk, Office of the Registrar of Joint Stock Companies, Bengal.	Treasury Buildings	ditto
4131	Gupta, Sukumar, BA	Assistant, Agriculture and Industries Department, Bengal	Writers' Buildings	ditto
4132	Gupta, Surendra Nath	Assistant, Accounts Department, Calcutta Corporation	Municipal Office	ditto
4133	Gupta, Tarakdas	Salesman, C C Wakefield & Co, Ld	7, Royal Exchange Place	ditto
4134	Guzdar, N D	Head Clerk, Imperial Chemical Industries (India), Ld	18, Strand Road	Zoroastrian

H

4135	Hadi, Abdul, M A	Clerk, C A O's Office, E I R	E I R House	Mahomedan
4136	Hafiz, Mahomed Abdul, MA	Assistant, Bengal Secretariat, Irrigation Department	Writers' Buildings	ditto
4137	Hafiz, Mahomed Abdul	Assistant, Bengal Secretariat, Commerce Department	Writers' Buildings	ditto
4138	Hafizullah, A S, MA	S A S (Apprentice), Accountant-General's Office, Bengal	Treasury Buildings	ditto
4139	Hai, M Abdul	Assistant, Accounts Department, Calcutta Corporation	Municipal Office	ditto
4140	Hait, Shantiram, BA	Assistant, Accountant-General's Office, Bengal	Treasury Buildings	Hindu
4141	Halder, Anukul Chandra	Clerk, Traffic Deptt, E B R	3, Koilaghata Street	ditto

No.	Names.	Style or calling.	Residence or place of business.	Religion.
4142	Haldar, Bangshidhar, BA	Inspector, License Department, Calcutta Corporation	Municipal Office	Hindu
4143	Haldar, Bankim Bihari	Clerk, Gillanders, Arbuthnot & Co	8, Clive Street	ditto
4144	Haldar, Ghanashyam	Assistant, Reserve Bank of India	8, Council House Street	ditto
4145	Haldar, Gopendra Kr	Clerk, Telegraph Check Office	33, Dalhousie Square, South	ditto
4146	Haldar, Hridaya Nath, BA	S. A. S. Clerk, Army Factory Accounts	6, Esplanade, East	ditto
4147	Haldar, Manindra Nath	Head Draftsman, Engineer's Office, E B R	3, Kaylaghat Street	ditto
4148	Haldar, Monmohan	Assistant, Mercantile Marine Department	15-1, Strand Road	ditto
4149	Haldar, Narayan Chandra, MA	Clerk, D A G P & T Office	7, Koilaghat Street	ditto
4150	Haldar, Narayan Chandra	Clerk, Burmah Shell Co of India, Ld	Hongkong House	ditto
4151	Haldar, Navataru	Assistant, Central Stationery Office	3, Church Lane	ditto
4152	Haldar, Nishikanta	Clerk, *Statesman*, Ld	Statesman House	ditto
4153	Haldar, Pradyot Kumar, BA	Assistant, Calcutta University	Senate House	ditto
4154	Haldar, Prafulla Chandra, MA	Assistant, Accountant-General's Office, Bengal	Treasury Buildings	ditto
4155	Haldar, Prasad Das	Inspector, Collection Department, Calcutta Corporation	Municipal Office	ditto
4156	Haldar, Rabindra Nath	Clerk, Telegraph Check Office	33, Dalhousie Square, South	ditto

4157	Haldar, Sanat Kumar	Assistant, Income-tax Office	3, Government Place, West	ditto
4158	Haldar, Tarak Nath	Assistant, Brooke Bond (India), Ld	2, Metcalfe Street	ditto
4159	Haldar, Upendra Krishna	Assistant, F W Heilgers & Co	1-1, Clive Street	ditto
4160	Halimuzzaman, Kazi Abdul Malik Muhammad.	Assistant, Bengal Secretariat, P W D	Writers' Buildings	Mahomedan
4161	Hamid, A	Assessor, Income-tax Office	3. Government Place, West	ditto
4162	Hamid, Abdul	Engraver, Engraving Office, Survey of India	13, Wood Street	ditto
4163	Hamid, Sultan (Maulvi)	Assistant, Income-tax Office	6, Esplanade, East	ditto
4164	Hamidulla, Ali Ahmad	Assistant, Bengal Secretariat, Accounts Department	Writers' Buildings	ditto
4165	Hannan, Abdul	Assistant, Office of the I-G of Police	Writers' Buildings	ditto
4166	Harun-ar-Rashid (Maulvi)	Assistant, Bengal Secretariat, Political (Special) Department	Writers' Buildings	ditto
4167	Hassan, A B Z	Special Inspector, Traffic Department, E B R	3, Koilaghat Street	ditto
4168	Hastir, Ram Narayan	Extra Assistant Superintendent, Drawing Office, Survey of India	13, Wood Street	Hindu
4169	Hazi, Altafar Rahman	Assistant, Surgeon-General's Office, Bengal	Writers' Buildings	Mahomedan
4170	Hazra, Annada Charan	Assistant, Income-tax Office	6, Esplanade, East	Hindu
4171	Hazra, B B	Head Clerk, McGregor & Balfour, Ld	11, Clive Street	ditto

No.	Names.	Style or calling.	Residence or place of business.	Religion.
4172	Hazra, Jatindra Nath	Clerk, Telegraph Check Office	33, Dalhousie Square, South	Hindu
4173	Hazra, Nabagopal, BA	Assistant, Board of Revenue, Bengal	Writers' Buildings	ditto
4174	Hazra, Nanda Lal	Clerk, Secretary's Department, Port Commissioners' Office	Strand Road	ditto
4175	Hazra, Paresh Nath	Clerk, Imperial Bank of India	3, Strand Road	ditto
4176	Hazra, Radhika Prasad	Clerk, Estate Supdt's Office, Port Commissioners	Strand Road	ditto
4177	Hazra, Sharat Chandra, BA	Clerk, D A G P & T Office	7, Koilaghat Street	ditto
4178	Hazra, Shashadhar, BCom	Assistant, Central Stationery Office	3, Church Lane	ditto
4179	Hazra, Surendra Nath	Head Clerk, Blackwood, Bryson & Co, Ld	2, Mangoe Lane	ditto
4180	Hazra, Surendra Nath	Clerk, D A G P & T Office	7, Koilaghat Street	ditto
4181	Hazra, Upendra Nath	Clerk, Jardine, Skinner & Co	4, Clive Row	ditto
4182	Hemmady, Shivashanka Laxmanrao	Assistant, Burmah Shell Co of India, Ltd	Hongkong House	ditto
4183	Homair, Shah Mahomed	Assistant Superintendent, C O S Office, E I R	E I R House	Mahomedan
4184	Hossain, Afzal, BL	Assessing Inspector, Calcutta Corporation	Municipal Office	ditto
4185	Hossain, Akhtar, MA	Lecturer, Islamia College	8, Wellesley Street	ditto
4186	Hossain, Hamid	Chemical Assistant, Central Stationery Office	3, Church Lane	ditto
4187	Hossain, Khondkar Mokarram, BA	Head Assistant, Agriculture and Industries Department, Bengal	Writers' Buildings	ditto
4188	Hossain, M	Assistant, Mackinnon, Mackenzie & Co	8, Strand Road	ditto

4189	Hossain, Mahammad (Maulvi)	Assistant, Income-tax Office	6, Esplanade, East	ditto
4190	Hossain, Mahomed Sakhawat, BL	Assistant, Bengal Secretariat, Marine Department	Writers' Buildings	ditto
4191	Hossain, Mahomed Tafazzal (Maulvi), BA	Assistant, Bengal Secretariat, Political Department	Writers' Buildings	ditto
4192	Hossain, Mudasser (Maulvi)	Assistant, Office of the Private Secy to H E the Governor of Bengal	Government House	ditto
4193	Hossain, Nural (Maulvi)	Assistant, Legislative Department, Bengal	Council House	ditto
4194	Hossain, Quazi Akram, MA	Lecturer, Islamia College	8, Wellesley Street	ditto
4195	Hossain, Safdar, BA (Cal)	Examiner of Accounts, Income-tax Office	6, Esplanade. East	ditto
4196	Hossain, Sm Mozaffar	Clerk, Telegraph Check Office	33, Dalhousie Square, South	ditto
4197	Hossain, Syed Akhtar, MA	Examiner of Accounts, Income-tax Office	1, Hare Street	ditto
4198	Hossain, Tafazzal (Maulvi)	Assistant, Income-tax Office	3, Government Place, West	ditto
4199	Hossain, Uz-Zaman	Assistant, Office of the Director of Industries, Bengal	40-1A. Free School Street	ditto
4200	Hukoo, Harihar Nath	Clerk, C O P S Office. E I R	E I R House	Hindu
4201	Huq, Abedul	Head Clerk, Income-tax Office	3 Government Place, West	Mahomedan
4202	Huq, A K Manzural	Lecturer, Islamia College	8, Wellesley Street	ditto
4203	Huq, Amjed Zahurul	Gallery Assistant, Victoria Memorial Hall	Victoria Memorial Hall	ditto
4204	Huq, Anwarul, BA	Assistant, Bengal Secretariat, P W D	Writers' Buildings	ditto
4205	Huq, Azmatul	Assessor, Income-tax Office	6, Esplanade, East	ditto

No.	Names.	Style or calling.	Residence or place of business.	Religion.
4206	Huq, A N M Serajul, BA	Assessor, Income-tax Office	3, Government Place, West	Mahomedan
4207	Huq, Enamel (Maulvi)	Assistant, General Department, Calcutta Collectorate	3, Charnock Place	ditto
4208	Huq, K A	Clerk, Telegraph Check Office	33, Dalhousie Square, South	ditto
4209	Huq, Kazi Shamsul	Clerk, Telegraph Check Office	33, Dalhousie Square, South	ditto
4210	Huq, M, BCom	Examiner of Accounts, Income-tax Office	6, Esplanade, East	ditto
4211	Huq, M M	Reader, Govt of India Press	8, Hastings Street	ditto
4212	Huq, M T	Clerk, D A G P & T Office	7, Koilaghat Street	ditto
4213	Huq, Md Fazlul, BL	Head Clerk, Income-tax Office	3, Government Place, West	ditto
4214	Huq, Raqibul, MA	Inspector Surveyor, Income-tax Office	3, Government Place, West	ditto
4215	Huq, Shamsul, MA	Lecturer, Islamia College	8, Wellesley Street	ditto
4216	Huq, Shamsul	Clerk, D A G P & T Office	7, Koilaghat Street	ditto
4217	Huq, Sheikh Nurul, BA	Assistant, Accountant-General's Office, Bengal	Treasury Buildings	ditto
4218	Huq, Sheikh Shamsul (Maulvi)	Assistant, Bengal Secretariat, Police Department	Writers' Buildings	ditto
4219	Huq, S S	Assistant, Mackinnon, Mackenzie & Co	8, Strand Road	ditto
4220	Huq, Syed Zaharul (Maulvi)	Assistant, Bengal Secretariat. L S-G Department	Writers' Buildings	ditto
4221	Huq, Zahurul	Secretary, Remington Rand Inc	3, Council House Street	ditto

4222	Ibrahim, Shaikh Mahammad, BSc	Lecturer, Calcutta Technical School	110, Surendra Nath Banerjee Road	Mahomedan
4223	Indra, Satish Chandra	Accountant, Land Acquisition Collector's Office	5, Bankshall Street	Hindu
4224	Ishaque, Mahammad (Maulvi)	Assistant, Bengal Secretariat, Irrigation Department	Writers' Buildings	Mahomedan
4225	Islam, Hedayetul (Maulvi), BSc	Laboratory Assistant, Islamia College	8, Wellesley Street	ditto
4226	Iyer, Chittur Venkataswara	Clerk, Alliance Assurance Co, Ld	2, Hare Street	Hindu
4227	Iyer, Comal Rajagopal Krishnamurthi	Assistant, Andrew, Yule & Co, Ld	8, Clive Row	ditto
4228	Iyer, Ganapati Mohadeb	Assistant, Agent's Office, E I R	E I R House	ditto
4229	Iyer, Ganjai Kondinsundaram Subramania.	Stenographer, Accounts Department, E B R	3, Kaylaghat Street	ditto
4230	Iyer, K G Krishna	Clerk, Prudential Assurance Co, Ld	Clive Buildings	ditto
4231	Iyer, K K	Assistant, Llewelyn & Co	9-1, Waterloo Street	ditto
4232	Iyer, K S Shanker	Assistant, F W Heilgers & Co	1-1, Clive Street	ditto
4233	Iyer, Kuppyswami Narayanswami	Audit Clerk, Thos Cook & Son	4, Dalhousie Square	ditto
4234	Iyer, M K	Clerk, Dunlop Rubber Co. (India), Ltd	42, Free School Street	ditto
4235	Iyer, Muthuswamy Panchapakesa	Assistant, Andrew, Yule & Co, Ld	8, Clive Row	ditto
4236	Iyer, M V S	W & W Department, E I R	E I R House	ditto
4237	Iyer, Narain	Assistant, D J Keymer & Co, Ld	4, Lyons Range	ditto
4238	Iyer, N D	Assistant, National Insurance Co, Ld	7, Council House Street	ditto
4239	Iyer, N K, BA	Assistant, Office of the Controller of Currency	Treasury Buildings	ditto
4240	Iyer, N Raghunath, BA	Assistant, Commercial Intelligence Department, India	1, Council House Street	ditto

No.	Name	Style or calling	Residence or place of business	Religion
4241	Iyer, N Ramaswami	Assistant Accountant, Port Commissioners' Office	Strand Road	Hindu
4242	Iyer, N S	Clerk, Dunlop Rubber Co (India), Ld	42, Free School Street	ditto
4243	Iyer, P A Sankara	Assistant, Andrew, Yule & Co, Ld	8, Clive Row	ditto
4244	Iyer, P N K	Accountant, C A O's Office, E I R	E I R House	ditto
4245	Iyer, R A	Assistant, A-G's Office, Bengal	Treasury Buildings	ditto
4246	Iyer, Ramaswami	Assistant, Bengal Secretariat, Revenue Department	Writers' Buildings	ditto
4247	Iyer, Ram Krishna	Cashier and Accountant, Royal Asiatic Society of Bengal	1, Park Street	ditto
4248	Iyer, S Krishna	Assistant, Balmer, Lawrie & Co, Ld	103, Clive Street	ditto
4249	Iyer, S Rama	Stenographer, C A O's Office, E I R	E I R House	ditto
4250	Iyer, Varetha	Stenographer, George O Penn (India), Ld	22, Chowringhee	ditto
4251	Iyer, Venkata Subramaniya	Head Clerk, Bengal Iron Co, Ld	4, Lyons Range	ditto
4252	Iyer, V Sundaram	Accounts Clerk, E B R	3, Koilaghat Street	ditto
4253	Iyer, V V P	Assistant, Oriental Government Security Life Assurance Co, Ld	2, Clive Row	ditto
	J			
4254	Jafer, G R	Assistant Manager, Adamjee Hajee Dawood & Co, Ld	4, Dalhousie Square, East	Mahomedan
4255	Jagannathan, Rangaswami, MA	Assistant, Tata Iron & Steel Co, Ld	100, Clive Street	Hindu
4256	Jahan, Md Mir, MA	Lecturer, Islamia College	8, Wellesley Street	Mahomedan

4257	Jalil, Mahamad Abdul (Maulvi)	Assistant, Bengal Secretariat, P W D	Writers' Buildings	ditto
4258	Jamil, Md Tahir, M A	Lecturer, Islamia College	8, Wellesley Street	ditto
4259	Jani, B L	Cashier, Central Bank of India, Ld	71, Cross Street	Hindu
4260	Jethabhai, Devidas	Accountant, Jupiter General Insurance Co, Ld	7, Pollock Street	ditto
4261	Joardar, Abalakanta	Assistant, Central Forms Store	166, Dharamtala Street	ditto
4262	Joardar, A D	Inspector of Factories, Bengal	40-1A, Free School Street	ditto
4263	Joardar, Mahbub Ali	Assistant, Bengal Secretariat, Finance Deptt	Writers' Buildings	Mahomedan
4264	Joshi, Krishna Rao	Examiner of Stores, Indian Stores Department (Inspection)	6, Esplanade, East	Hindu
4265	Jubbar, Abdul, MA, BL	Examiner of Accounts, I T Office	1, Hare Street	Mahomedan
4266	Junnakar, N R	Assistant, Octavius Steel & Co, Ld	14, Old Court House Street	Hindu

K

4267	Kadir. Abdul (Maulvi), BA	Assistant, Office of the Controller of Currency	Treasury Buildings	Mahomedan
4268	Kaha, K S	Assistant Manager, Prominent Sports, Ld	19C, Chowringhee	Hindu
4269	Kaka, Ardeshir Rustomji	Assistant, Tata Iron & Steel Co, Ld	100, Clive Street	Zoroastrian
4270	Kalra, Mohan Singh	Cashier, Punjab National Bank, Ld	135-36, Canning Street	Sikh
4271	Kamat, H R	Assistant, F W Heilgers & Co	1-1, Clive Street	Hindu
4272	Kanga, Dara, BA	Cashier & Accountant, Callendar's Cable & Constrn Co, Ld	2, Pollock Street	Zoroastrian
4273	Kanjilal, Dhirendra Nath, BA	Assistant, Accountant-General's Office, Bengal	Treasury Buildings	Hindu
4274	Kanjilal, Nishi Bhusan, BA	Clerk, D A G P & T Office	7, Koilaghat Street	ditto

No.	Names.	Style or calling.	Residence or place of business.	Religion.
4275	Kanthal, Bibhuti Bhusan, MA	Lecturer, Ripon College	24, Harrison Road	Hindu
4276	Kapoor, Durga Prasad	Assistant, Allahabad Bank, Ld	6, Royal Exchange Place	ditto
4277	Kapoor, K L	Claims Inspector, Traffic Department, E B R	3, Koilaghat Street	ditto
4278	Kapoor, Narain Das	Assistant, Allahabad Bank, Ld	6, Royal Exchange Place	ditto
4279	Kar, Bipin Bihari	Assistant Superintendent, Reserve Bank of India	8, Council House Street	ditto
4280	Kar, Krishna Charan	Assistant, Bengal Secretariat, Finance Department	Writers' Buildings	ditto
4281	Kar, Kulesh Chandra	Lecturer, Presidency College	86-1, College Street	ditto
4282	Kar, Nalini Mohan	Cashier, Bengal Provincial Co-operative Bank, Ld	Writers' Buildings	ditto
4283	Kar, Ranadhir, BA	Audit Clerk, U M Chaudhuri & Co	12-1, Old Post Office Street	ditto
4284	Kar, Sunil Chandra, BA	Assistant, A-G's Office, Bengal	Treasury Buildings	ditto
4285	Kar Gupta, Upendra Nath	Overseer, Ex Engineer's Office, City Division, P W D	Writers' Buildings	ditto
4286	Karim, A S M	Assistant Master, Calcutta Madrassah	19, Wellesley Square	Mahomedan
4287	Karim, Bazlal (Maulvi), BA	Con Overseer, Calcutta Corporation, D E I	79, Cornwallis Street	ditto
4288	Karmakar, Annada Ch	Clerk, Calcutta Improvement Trust	5, Clive Street	Hindu
4289	Karmakar, Bhola Nath	Clerk, D A G P & T Office	7, Koilaghat Street	ditto
4290	Karmakar, Bijay Krishna, BA	Clerk, D A G P & T Office	7, Koilaghat Street	ditto
4291	Karmakar, Haridas	Assistant, Bengal Secretariat, Irrigation Department	Writers' Buildings	ditto

4292	Katre, Sarju R	Clerk, Burmah Shell Co of India, Ld	Hongkong House		ditto
4293	Karmakar, Jogneshwar	Senior Estimator, Spl Officer's Department, Calcuta Corporation	Municipal Office		ditto
4294	Karmakar, Prafulla Chandra	Engrg Overseer, Calcutta Corporation, D E I	79, Cornwallis Street		ditto
4295	Karmakar, Prahlad Chandra	Assistant Designer, Government School of Art	28, Chowringhee		ditto
4296	Karmakar, Satya Charan	Clerk, D A G P & T Office	7, Koilaghat Street		ditto
4297	Karmakar, Shibnath	Book-keeper, Landale and Clark Ld	11, Clive Street		ditto
4298	Karmakar, Shyama Charan, MA, BL	Assessing Inspector, Calcutta Corporation	Municipal Office		ditto
4299	Karmakar, Suresh Chandra	Assistant Engineer, J C Banerjee, Ld	20, Strand Road		ditto
4300	Kasem, Md Abul (Maulvi)	Assistant, Bengal Secretariat, L S-G Department	Writers' Buildings		Mahomedan
4301	Kassim, Md Abul, B COM	Examiner of Accounts, Income-Tax Office	6, Esplanade, East		ditto
4302	Kassim, Md Syed	Assistant, A-G's Office, Bengal	Treasury Buildings		ditto
4303	Katra, G Ram	Assistant, Bird & Co	1-1, Clive Street		Hindu
4304	Katre Sarju R	Clerk, Burmah Shell Co of India, Ld	Hongkong House		ditto
4305	Katre, Vithal Mangesh	Clerk, Burmah Shell Co of India, Ld	Hongkong House		ditto
4306	Kawthankar, D H	Clerk, Dunlop Rubber Co (India) Ld	42, Free School Street		ditto
4307	Khabiruddin, Sarda Mahamad (Maulvi), BA	Assistant, Legislative Department, Bengal	Council House		Mahomedan
4308	Khair, Maulvi Abul	Assistant, Office of the Director of Public Instruction, Bengal	Writers' Buildings		ditto
4309	Khair, Md Abul, BA	Clerk, Telegraph Check Office	33, Dalhousie Square, South		ditto
4310	Khalil, Mahammad, BA, BT	Assistant Head Master, Calcutta Madrassah	19, Wellesley Square		ditto
4311	Khaliq, Abdul	Lecturer, Presidency College	86-1, College Street		ditto
4312	Khan, Abani Nath, MA	Assistant, Accountant-General's Office, Bengal	Treasury Buildings		Hindu
4313	Khan, Abbas Ali, MA	Lecturer, Islamia College	8, Wellesley Street		Mahomedan
4314	Khan, Abdul Bari (Maulvi)	Assistant, Bengal Secretariat, Political Department	Writers' Buildings		ditto

No.	Names.	Style or calling.	Residence or place of business.	Religion.
4315	Khan, Abdul Hossain	Clerk, D A G P & T Office	7, Koilaghat Street	Mahomedan
4316	Khan, Abdul Karim (Maulvi)	Assistant, Office of the Director of Public Health, Bengal	Writers' Buildings	ditto
4317	Khan, Abdur Rahman (Maulvi)	Assistant, Bengal Secretariat, L S-G Department	Writers' Buildings	ditto
4318	Khan, Abul Ali, BA	Clerk, D A G P & T Office	7, Koilaghat Street	ditto
4319	Khan, Amarnath	Assistant, Accountant-General's Office, Bengal	Treasury Buildings	Hindu
4320	Khan, Azizur Rahman (Maulvi)	Assistant, Bengal Secretariat Record-room	Writers' Buildings	Mahomedan
4321	Khan, Benode Bihari	Assistant, Mackinnon, Mackenzie & Co	16, Strand Road	Hindu
4322	Khan, Bhupendra Nath	Assistant, Grahams Trading Co (India), Ld	6, Lyons Range	ditto
4323	Khan, M A	Apprentice, Oriental Govt Security Life Assurance Co, Ld	2, Clive Row	Mahomedan
4324	Khan, Mahomed Ayub (Maulvi), BA	Assistant, Bengal Secretariat, Political Department (Jails Branch)	Writers' Buildings	ditto
4325	Khan, Md Ziaul Abedin (Maulvi), MA	Assistant, Bengal Secretariat, Irrigation Department	Writers' Buildings	ditto
4326	Khan, Nani Gopal	Head Clerk, Traffic Department, E B R	3, Kaylaghat Street	Hindu
4327	Khan, Samsam-Uddin (Maulvi), BA	Assistant, Bengal Secretariat, Political Department (Jails Branch)	Writers' Buildings	Mahomedan
4328	Khan, Serajul Islam, MA	Assessor, Income-tax office	3, Government Place, West	ditto
4329	Khan, Shamser Ali (Maulvi), BL	Assistant, Bengal Secretariat, Appointment Department	Writers' Buildings	ditto
4330	Khan, Shib Krishna, B SC	Clerk, D A G P & T Office	7, Koilaghat Street	Hindu
4331	Khanna, Bhairo Prasad	Clerk, Allahabad Bank, Ld	6, Royal Exchange Place	ditto
4332	Khanna, Hari Sanker Lal	Clerk, Allahabad Bank, Ld	6, Royal Exchange Place	ditto
4333	Khasnabis, Ramesh Chandra	Surveyor and Valuer, Land Acquisition Office	5, Bankshall Street	ditto

4334	Khawja, Nasiruddin	Sec Sub-Head, C C M's Office, E I R	E I R House	Mahomedan
4335	Khizir, Mahomed Ghulam (Maulvi)	Assistant, Public Health Department, Bengal	Writers' Buildings	ditto
4336	Khondkar, Mahomed Hosainuddin	Head Clerk, Office of the Assistant Director of Public Instruction for Muhammadan Education, Bengal.	Writers' Buildings	ditto
4337	Khondkar, Samsuddin	Assistant, Bengal Secretariat, Revenue Department	Writers' Buildings	ditto
4338	Khosla, Jaswant Rai, BA	Assistant, K C Thapar & Bros, Ld	5, Royal Exchnge Place	Hindu
4339	Khosla, K C	Assistant Engineer, Indian Stores Department (Inspection)	6, Esplanade, East	ditto
4340	Koar, Chittobinodan, MB	Food Insector, Calcutta Corporation	79, Cornwallis Street	ditto
4341	Konar, Jatindra Nath	Office Supdt, Traffic Department, E B R	3, Kaylaghat Street	ditto
4342	Kothary, Shiva Singh	Hd Assistant, Birla Brothers, Ld	8, Royal Exchange Place	ditto
4343	Koyal, Adhar Chandra	Clerk, D A G P & T office	7, Koilaghat Street	ditto
4344	Krishna, Srinivasa	Head Clerk, G D Peters (India), Ld	10, Clive Street	ditto
4345	Krishnamurtty, Mahalinga	Stenographer, British Insulated Cables, Ld	2, Waterloo Street	ditto
4346	Krishnaswami, Venadhirajopuran Sambasiva-Iyer, BA	Stenographer, Patent Office	1, Council House Street	ditto
4347	Kulkarni, Dinanath Raghvendra, B Com	Assistant, Tata Iron & Steel Co, Ld	100, Clive Street	ditto
4348	Kulkarni, P P	Assistant Electrical Engineer, E I R	E I R House	ditto
4349	Kumar, Atal Krishna	Bill Collector, Bengal Telephone Corporation, Ld	8, Hare Street	ditto
4350	Kumar, Fanibhusan	Clerk, D A G P & T Office	Hongkong House	ditto
4351	Kumar, Kanai Lal	Assistant, Bengal Secretariat, Political Department	Writers' Buildings	ditto
4352	Kumar, Surendra Nath	Clerk, Telegraph Check Office	33, Dalhousie Square, South	ditto

No.	Names.	Style or calling.	Residence or place of business.	Religion.
4353	Kumar, Tinkari	Clerk, Shaw, Wallace & Co	4, Bankshall Street	Hindu
4354	Kundan, Lall Malhotra	Assistant, Martin & Co	12, Mission Row	ditto
4355	Kundu, Amarendra Nath, BA	Clerk, D A G P & T Office	7, Koilaghat Street	ditto
4356	Kundu, Bhupendra Nath	Clerk, Place, Siddons & Gough	6, Lyons Range	ditto
4357	Kundu, Dhirendra Nath	Assistant, Bengal Secretariat, L S-G Department	Writers' Buildings	ditto
4358	Kundu, Dulal Chandra	Offig Head Assistant, Surgeon-General's Office, Bengal	Writers' Buildings	ditto
4359	Kundu, Fakir Chandra	Ch Ledger Clerk, Thos Cook & Son, Ld	4, Dalhousie Square	ditto
4360	Kundu, Indu Bhusan, B.Sc	Clerk, D A G P & T Office	7, Koilaghat Street	ditto
4361	Kundu, Jatindra Nath	Clerk, D A G P & T Office	7, Koilaghat Street	ditto
4362	Kundu, Jay Krishna	Clerk, Chartered Bank of India, Australia and China	1-1, Clive Street	ditto
4363	Kundu, J D, BA	Accountant, Britannia Biscuit Co, Ld	Stephen House	ditto
4364	Kundu, Keshab Chandra	Assistant, National Insurance Co, Ld	7, Council House Street	ditto
4365	Kundu, Keshab Chandra	Clerk, Ralli Bros, Ld	16, Hare Street	ditto
4366	Kundu, Manik Chandra	Examiner of Stores, Indian Stores Department (Inspection)	6, Esplanade, East	ditto
4367	Kundu, M C	Clerk, Office of the Chief Mining Engineer, Railway Board	1, Council House Street	ditto
4368	Kundu, Nanda Lal	Clerk, D A G P & T Office	7, Koilaghat Street	ditto
4369	Kundu, Narendra Mohan, BA	Inspector, Sir Stuart Hogg Market	Sir Stuart Hogg Market	ditto
4370	Kundu, Nripendra Nath	Assistant, Price, Waterhouse, Peat & Co	B-4, Clive Buildings	ditto
4371	Kundu, Prafulla Kumar, B COM, GDA	Examiner of Accounts, I T Office	3, Government Place, West	ditto
4372	Kundu, Pramatha Nath	Assistant, Bengal Secretariat, Accounts Department	Writers' Buildings	ditto
4373	Kundu, Priya Nath, MSc	Lecturer, Ripon College	24, Harrison Road	ditto

4374	Kundu, Rajendra Nath	Assistant, James Finlay & Co, Ld	1, Clive Street	ditto
4375	Kundu, Ramsaran	Assistant, Calcutta University	Senate House	ditto
4376	Kundu, Satya Charan	Assistant, Income-tax Office	Imperial Secretariat Buildings	ditto
4377	Kundu, Subodh Nath, B A	Assistant, Bengal Secretariat, Political Department	Writers' Buildings	ditto
4378	Kundu, Sushil Kumar	Clerk, C A.'s Office, E I R	E I R House	ditto
4379	Kushiari, Rohini Kumar	Assistant, Bengal Secretariat Record Room	Writers' Buildings	ditto
	L			
4380	Laha, Amulya Ch	Assistant, Bird & Co	1-1, Clive Street	Hindu
4381	Laha, Charu Chandra	Assistant, Bird & Co	1-1, Clive Street	ditto
4382	Laha, H K	Head Clerk, Java Sea & Fire Insurance Co, Ld	4, Lyons Range	ditto
4383	Laha, Kanai Lal	Computor, Government of India Press	8, Hastings Street	ditto
4384	Laha, Krishna Chandra	Assistant, Bird & Co	1-1, Clive Street	ditto
4385	Laha, Lalit Mohan	Surveyor & Valuer, Land Acquisition Office	5, Bankshall Street	ditto
4386	Laha, Nilmani	Cashier (Collection), Port Commissioners' Office	Strand Road	ditto
4387	Laha, Prafulla Kumar, BA	Assistant, Bengal Secretariat, Accounts Department	Writers' Buildings	ditto
4388	Laha, Radhika Prasad	Clerk, Shaw, Wallace & Co	4, Bankshall Street	ditto
4389	Laha, Rasaraj	Head Clerk, E Meyer & Co (1926), Ld	2, Clive Ghat Street	ditto
4390	Laha, Satish Chandra	Assistant, Reserve Bank of India	8, Council House Street	ditto
4391	Laha, Shital Chandra	Accounts Clerk, E B R	3, Koilaghat Street	ditto
4392	Laha, Surendra Nath	Clerk, Shaw, Wallace & Co	4, Bankshall Street	ditto
4393	Lahiri, Abinash Chandra	Clerk, Telegraph Check Office	33, Dalhousie Square, South	ditto
4384	Lahiri, Baidyanath	Assistant, Lovelock & Lewes	4, Lyons Range	ditto
4395	Lahiri, Benoy Chandra	Clerk, D A G P & T Office	7, Koilaghat Street	ditto

No.	Names	Style or calling.	Residence or place of business.	Religion.
4396	Lahiri, Benode Prasanna	Head Clerk, Ex-Engineer's Office, Dredger Division	3, Charnock Place	Hindu
4397	Lahiri, Chandra Lochan, BA	Clerk, Lloyds Bank, Ld	101-1, Clive Street	ditto
4398	Lahiri, Chintamani	Assistant, Mackinnon, Mackenzie & Co	16, Strand Road	ditto
4399	Lahiri, Chunilal	Superintendent, Unique Assurance Co, Ld	10, Canning Street	ditto
4400	Lahiri, Dhaneshwar	Assistant, Lovelock & Lewes	4, Lyons Range	ditto
4401	Lahiri, Dhirendra Nath	Superintendent, C-C Dept, Central Bank of India, Ld	100, Clive Street	ditto
4402	Lahiri, Dinesh Chandra	Assistant, Suptg Engineer's Office, S Circle, P W D	3, Government Place, West	ditto
4403	Lahiri, Girish Chandra	Assistant, Bird & Co	1-1, Clive Street	ditto
4404	Lahiri, Harendra Nath	Reader, Govt. of India Press	8, Hastings Street	ditto
4405	Lahiri, Harinath	Clerk, Agent's Office, E I R	E I R House	ditto
4406	Lahiri, J C	Assistant, Guest, Keen, Williams, Ld	7, Council House Street	ditto
4407	Lahiri, Krishna Chandra, MA	Professor, City College	102/1, Amherst Street	ditto
4408	Lahiri, Lalit Mohan	Clerk, D A G P & T Office	7, Koilaghat Street	ditto
4409	Lahiri, Manmatha Nath	Clerk, Turner, Morrison & Co, Ld	6, Lyons Range	ditto
4410	Lahiri, Mukunda Murari	Audit Clerk, E B R	3, Kaylaghat Street	ditto
4411	Lahiri, N G	Inspector, Oriental, Govt Security Life Assurance Co, Ld	2, Clive Row	ditto
4412	Lahiri, Nagendra Nath	Accounts Clerk, D J Keymer & Co, Ld	4, Lyons Range	ditto
4413	Lahiri, Nirmalya Kumar	Clerk, C O S S's Office, E I R	E I R House	ditto
4414	Lahiri, Shyamapada	Assistant, Accountant-General's Office, Bengal	Treasury Buildings	ditto
4415	Lahiri Chaudhuri, Nripendra Kanta	Assistant, Excise Commissioner's Office, Bengal	Writers' Buildings	ditto

4416	Lal, Anokhey	Clerk, C A O's Office, E I R	E I R House	ditto	
4417	Lal, Babu	Section Superintendent, Engineer's Office, E B R	3, Koilaghat Street	ditto	
4418	Lal, Mahabbat	Clerk, Allahabad Bank, Ld	6, Royal Exchange Place	ditto	
4419	Lateef, Abdul (Maulvi)	Assistant Reader, Bengal Library	Writers' Buildings	Mahomedan	
4420	Lateef, Abdul, BA	Clerk, D A G P & T Office	7, Koilaghat Street	ditto	
4421	Lateef, Abdul	Assistant, Bengal Secretariat, Revenue Deptt	Writers' Buildings	ditto	
4422	Law, Nagendra Kumar	Clerk, Royal Calcutta Turf Club	11, Russell Street	Hindu	
4423	Lodh, Nagendra Kumar, MA	Teacher, Bangabasi College School	19, Scott Lane	ditto	
4424	Luthra, Rajkrishen	Assistant, Reserve Bank of India	8, Council House Street	ditto	
	M				
4425	Madan, Behram Shapurji	Accountant, Royal Exchange Assurance	1 & 2, Old Court House Street	Zoroastrian	
4426	Madgavkar, Keshav Dinanath	Accountant, Scindia Steam Navigation Co, Ld	100, Clive Street	ditto	
4427	Mahmud, Hafiz Syed Mahammad	2nd Maulvi, Calcutta Madrassah	19, Wellesley Square	Mahomedan	
4428	Mahomed, Baksh	Clerk, D A G P & T Office	7, Koilaghat Street	ditto	
4429	Mahomed, Haji Valli	Assistant, Norman Ross & Co	3, Clive Street	ditto	
4430	Mahomed, Jamsed	Surveyor & Estimator, Calcutta Corporation	Municipal Office	ditto	
4431	Mahomed, Nabi, MSc	Assistant, Bengal Secretariat, Finance Department	Writers' Buildings	ditto	
4432	Mahomed, Noor, B A	Assessing Inspector, Calcutta Corporation	Municipal Office	ditto	
4433	Mahomed, Sahiduddin (Maulvi), BA	Assistant, Bengal Secretariat, Marine Department	Writers' Buildings	ditto	
4434	Maitra, Anil Kumar	Clerk, Martin & Co	12, Mission Row	Hindu	
4435	Maitra, Asit Chandra	Assistant, Brooke Bond (India), Ld	2, Metcalfe Street	ditto	
4436	Maitra, Baikuntha Nath	Assistant, Holmes, Wilson & Co, Ld	Norton Buildings	ditto	
4437	Maitra, Banges Chandra, BA	Agent, Central Bank of India, Ltd	133, Cornwallis Street	ditto	

No.	Names.	Style or calling	Residence or place of business.	Religion.
4438	Maitra, Bhupendra Nath	Demonstrator, Presidency College	86-1, College Street	Hindu
4439	Maitra, Haripada	Accountant, Improvement Trust Tribunal	6, Hastings Street	ditto
4440	Maitra, Kalipada	Cashier, Williamson, Magor & Co	4, Mangoe Lane	ditto
4441	Maitra, Kalipada	Clerk, Burmah Shell Co of India, Ld	Hongkong House	ditto
4442	Maitra, Kalipada	Stenographer, Bengal Secretariat, Finance Department	Writers' Buildings	ditto
4443	Maitra, Manmatha Nath	Assistant, Income-tax Office	3, Government Place, West	ditto
4444	Maitra, Manmatha Nath	Assistant, Reserve Bank of India	8, Council House Street	ditto
4445	Maitra, Prabodh Chandra	Assistant, Calcutta University	Senate House	ditto
4446	Maitra, Pramatha Nath	Assistant Accountant, Begg Dunlop & Co, Ld	2, Hare Street	ditto
4447	Maitra, Satyendra Nath	Assistant, Hoare Miller & Co, Ld	5, Fairlie Place	ditto
4448	Maitra, S C	Assistant, The Gas Accumulator Co (India), Ld	12, Mission Row	ditto
4449	Maitra, Shachindra Nath	Assistant, Shaw, Wallace & Co	4, Bankshall Street	ditto
4450	Maitra, Shivaram	Assistant, Andrew Yule & Co, Ld	8, Clive Row	ditto
4451	Maitra, Subodh Chandra	Assistant, Martin & Co	12, Mission Row	ditto
4452	Maitra, Sudhansu Sekhar	Assistant, Corn Products Co (India), Ld	4, Lyons Range	ditto
4453	Maitra, Surendra Nath	Clerk, Gillanders, Arbuthnot & Co	8, Clive Street	ditto
4454	Majid, Abdul, MA	Lecturer, Islamia College	8, Wellesley Street	Mahomedan
4455	Majid, Abdul	Assistant, I T Office	3, Government Place, West	ditto
4456	Majumdar, Ashutos	Assistant, Accounts Deptt, Calcutta Corporation	Municipal Office	Hindu
4457	Majumdar, Aswini Kumar	Assistant Accountant, Hindusthan Co-operative Insurance Society Ld	Hindusthan Buildings	ditto

4458	Majumdar, Bijaya K	Assistant, Octavius Steel & Co, Ld	14, Old Court House Street		ditto
4459	Majumdar, Binaya Bhusan, BA	Clerk, Assessor's Department, Calcutta Corporation	Municipal Office		ditto
4460	Majumdar, Bireswar	Clerk, Ford, Rhodes, Thornton & Co	Tower House		ditto
4461	Majumdar, Charu Chandra, BA	Secretary, Samajpati Smriti Samity Library and Free Reading Room.	47-E, Shampukur Street		ditto
4462	Majumdar, Charu Chandra, BA	Assistant, A G's Office, Bengal	Treasury Buildings		ditto
4463	Majumdar, D	Accountant, Spence's Hotel, Ld	4, Wellesley Place		ditto
4464	Majumdar, Dasharathi	Assistant, Accountant-General's Office, Bengal	Treasury Buildings		ditto
4465	Majumdar, Devendra Chandra	Head clerk, British Insulated Cables, Ld	2, Waterloo Street		ditto
4466	Majumdar, Dhirendra K	Clerk, C O S's Office, E I R	E I R House		ditto
4467	Majumdar, D N	Estate Surveyor, Port Commissioners' Office	Strand Road		ditto
4468	Majumdar, G C	Chief Agent, Bombay Co-operative Insurance Society, Ld	3, Commercial Buildings		ditto
4469	Majumdar, Girish Chandra, BA	Teacher, City School	13, Mirzapur Street		Brahmo
4470	Majumdar, Haraprasad	Head Clerk, India Provident Co, Ld	10, Clive Row		Hindu
4471	Majumdar, Jahar Lal	Assistant, Bengal Secretariat Record Room	Writers' Buildings		ditto
4472	Majumdar, Jatindra Nath	Assistant, Calcutta University	Senate House		ditto
4473	Majumdar, Jiban Krishna, BA	Clerk, D A G P & T Office	7, Koilaghat Street		ditto
4474	Majumdar, Jitendra Nath	Clerk, D A G P & T Office	7, Koilaghat Street		ditto
4475	Majumdar, Jitendra Nath	Assistant, Roberts, McLean & Co, Ld	101, Clive Street		ditto
4476	Majumdar, Jyotish Ch	Clerk, Telegraph Check Office	33, Dalhousie Square, South		ditto
4477	Majumdar, Kashipati	Accounts Clerk, E B R	3, Koilaghat Street		ditto
4478	Majumdar, Kishori Mohan	Clerk, Imperial Bank of India	3, Strand Road		ditto

No.	Names.	Style or calling.	Residence or place of business.	Religion.
4479	Majumdar, Kshitish Chandra	Stenographer, Union Insurance Society of Canton, Ld	8, Clive Street	Hindu
4480	Majumdar, Manindra Nath	Clerk, Harrisons & Crosfield, Ld	6, Church Lane	ditto
4481	Majumdar, Manmatha Nath, BSC	Assistant, Accountant-General's Office, Bengal	Treasury Buildings	ditto
4482	Majumdar, Nagendra Nath	Sanitary Officer, Calcutta Corporation	22, Mirzapore Street	ditto
4483	Majumdar, Nalini Nath	Surveyor, Calcutta Improvement Trust	5, Clive Street	ditto
4484	Majumdar, Narayan Chandra, BA	Teacher, Bangabasi College School	19, Scott Lane	ditto
4485	Majumdar, Niranjan	Accountant, Taylor's Gramophone Saloon	15-4, Chowringhee	ditto
4486	Majumdar, Nirmal Kanti, MA	Lecturer, Bethune College	181, Cornwallis Street	ditto
4487	Majumdar, Nripati Nath, BA	Assistant, Accounts Department, Calcutta Corporation	Municipal Office	ditto
4488	Majumdar, Phani Bhusan, MA	Clerk, D A G P & T Office	7, Koilaghat Street	ditto
4489	Majumdar, Pramatha	Inspector, Collection Department, Calcutta Corporation	Municipal Office	ditto
4490	Majumdar, Rabindra Mohan	Assistant, Accountant-General's Office, Bengal	Treasury Buildings	ditto
4491	Majumdar, Ranajit Kumar	Head Clerk, Calcutta Improvement Trust	5, Clive Street	ditto
4492	Majumdar, Saradindu Bhusan	Building Inspector, Calcutta Corporation	Municipal Office	ditto
4493	Majumdar, Satya Charan	Clerk, Place, Siddons & Gough	6, Lyons Range	ditto
4494	Majumdar, S C	Clerk, C E S C, Ld	Victoria House	ditto
4495	Majumdar, S C	Clerk, Office of the Chief Mining Engineer, Railway Board	1, Council House Street	ditto
4496	Majumdar, Shailendra Krishna	Assistant, A-G's Office, Bengal	Treasury Buildings	ditto
4497	Majumdar, Surabandhu, MA	Assistant, Commercial Intelligence Department, India	1, Council House Street	ditto
4498	Majumdar, Surendra Nath	Stenographer, Standard Literature Co, Ld	13-1, Old Court House Street	ditto
4499	Majumdar, Surendra Nath	Assistant, Office of the Director of Public Instruction, Bengal	Writers' Buildings	ditto

4500	Majumdar, Suresh Chandra	Assistant, Office of the Inspector-General of Prisons, Bengal	Writers' Buildings		ditto
4501	Majumdar, Upendra Nath	Surveyor & Estimator, Calcutta Corporation	Municipal Office		ditto
4502	Malakar, Loke Nath	Head Draftsman, Deputy Conservator's Department, Port Commissioners' Office	Strand Road		ditto
4503	Malakar, Umakanta	Overseer, City Division, P W D	Writers' Buildings		ditto
4504	Malaviya, Mahadeo Prasad	Assistant, Allahabad Bank of India, Ld	6, Royal Exchange Place		ditto
4505	Malaviya, Thakur Prasad	Assistant, Allahabad Bank, Ld	6, Royal Exchange Place		ditto
4506	Malhotra, M L	Clerk, Agent's office, E I R	E I R House		ditto
4507	Malia, H D	Head Clerk, Stores Department, E B R	3, Koilaghat Street		ditto
4508	Mallik, Abdul, BA	Clerk, Telegraph Check Office	33, Dalhousie Square, South		Mahomedan
4509	Mallik, Akbar Ali, MSc	Examiner of Accounts, Income-tax Office	6, Esplanade, East		ditto
4510	Mallik, A P	Deputy Accountant, Calcutta Mint	47, Strand Road		Hindu
4511	Mallik, Apurba Kumar	Clerk, D A G P & T Office	7, Koilaghat Street		ditto
4512	Mallik, Baidya Nath	Peshkar, Presidency Commissioner's Office	3, Charnock Place		ditto
4513	Mallik, Bata Krishna	Clerk, Burmah Shell Co of India, Ld	Hongkong House		ditto
4514	Mallik, Bholanath	Clerk, Lloyds Bank, Ld	101-1, Clive Street		ditto
4515	Mallik, Bholanath	Clerk, Imperial Bank of India	3, Strand Road		ditto
4516	Mallik, Bibhupada, MA	Clerk, D A G P & T Office	7, Koilaghat Street		ditto
4517	Mallik, Binode Bihari	Assistant, Accountant-General's Office, Bengal	Treasury Buildings		ditto
4518	Mallik, Birendra Nath	Assistant, Martin & Co	12, Mission Row		ditto
4519	Mallik, Bishnupada, BSc	Clerk, D A G P & T Office	7, Koilaghat Street		ditto

No.	Names.	Style or calling.	Residence or place of business	Religion.
4520	Mallik, Ganendra Nath	Assistant, Babcock and Wilcox, Ld	4, Bankshall Street	Hindu
4521	Mallik, Gopinath	Assistant, Lionel Edwards, Ld	D-1, Clive Buildings	ditto
4522	Mallik, Haridas	Clerk, Ralli Brothers, Ld	16, Hare Street	ditto
4523	Mallik, Hiralal	Assistant, Accountant-General's Office, Bengal	Treasury Buildings	ditto
4524	Mallik, Jagannath	Clerk, Burmah Shell Co of India, Ld	Hongkong House	ditto
4525	Mallik Janaki Nath	Book-keeper, Sinclair, Murray & Co, Ld	6, Royal Exchange Place	ditto
4526	Mallik, Jay Prakash	Clerk, Imperial Bank of India	3, Strand Road	ditto
4527	Mallik, Jitendra Nath	Cashier, Worthington-Simpson, Ld	10, Clive Street	ditto
4528	Mallik, Jnanranjan	Clerk, Calcutta Improvement Trust	5, Clive Street	ditto
4529	Mallik, Jogendra Narayan	Clerk, Agent's Office, E B R	3, Kaylaghat Street	ditto
4530	Mallik, Jyotish Chandra, BA	Game Supervisor, Scottish Church College	4, Cornwallis Square	Christian
4531	Mallik, Matiar Rahaman	Assistant, Accountant-General's Office, Bengal	Treasury Buildings	Mahomedan
4532	Mallik, Megh Nath	Clerk, Burmah Shell Co of India, Ld	Hongkong House	Hindu
4533	Mallik, Murari Mohan, BSC, BL	Clerk, Engineer's Office, E B R	3, Kaylaghat Street	ditto
4534	Mallik, Nagendra Nath	Assistant Accountant, Bengal Telephone Corporation, Ld	8, Hare Street	ditto
4535	Mallik, Nalin Krishna	Clerk, Agent's Office, E B R	3, Kaylaghat Street	ditto
4536	Mallik, Narendra Nath	Clerk, Martin & Co	12, Mission Row	ditto
4537	Mallik, Nitaichand	Clerk, I G N & Ry Co, Ld	4, Fairlie Place	ditto
4538	Mallik, Nritya Gopal	Assistant, Nestle and Anglo-Swiss Condensed Milk (Export) Co, Ld	9-A, Clive Street	ditto
4539	Mallik, Panchanan	Accounts Clerk, E B R	3, Koilaghat Street	ditto
4540	Mallik, Paresh Nath	Assistant, office of the I-G of Police, Bengal	Writers' Buildings	ditto

4541	Mallik, P K	Assistant, P & O Banking Corporation, Ld	1, Fairlie Place	ditto
4542	Mallik, P K	Accountant, The Manufacturers Life Insurance Co	27, Dalhousie Square	ditto
4543	Mallik, Prabodh Kumar, B Sc	Assistant. Accountant-General's Office, Bengal	Treasury Buildings	Christian
4544	Mallik, Prafulla Kumar	Assistant, Babcock & Wilcox, Ld	4, Bankshall Street	ditto
4545	Mallik, Purna Chandra	Assistant. Lovelock & Lewes	4, Lyons Range	Hindu
4546	Mallik, Purna Chandra	Assistant, Controller's Office, Calcutta University	Senate House	ditto
4547	Mallik, Satya Charan	Accountant, Northern Assurance Co, Ld	7, Hare Street	ditto
4548	Mallik, Sukumar	Clerk, Ford, Rhodes, Thornton & Co	Tower House	ditto
4549	Mallik, Surendra Kumar	Chief Clerk and Cashier, Norwich Union Fire Insurance Society, Ld	8, Old Court House Street	ditto
4550	Mallik, Uddhab Chandra	Assistant, Accountant-General's Office, Bengal	Treasury Buildings	ditto
4551	Manchanda. Shanti Sarup, BA	Assistant, K C Thapar & Bros, Ld	5, Royal Exchange Place	ditto
4552	Mandal, A P	Clerk, C O S Office, E I R	E I R House	ditto
4553	Mandal, Ashutos, BA	Clerk, Surveyor's Department, Calcutta Corporation	Municipal Office	ditto
4554	Mandal, Balai Lal	Assistant, Lionel Edwards, Ld	D-1, Clive Buildings	ditto
4555	Mandal, Dharanidhar	Clerk, Shaw, Wallace & Co	4, Bankshall Street	ditto
4556	Mandal, Guruprasad. MA	Assistant, Accountant-General's Office, Bengal	Treasury Buildings	ditto
4557	Mandal, Nishikanta, BA	Inspector, Collection Department, Calcutta Corporation	Municipal Office	ditto
4558	Mandal, Nityananda, BA	Assistant, Accountant-General's Office, Bengal	Treasury Buildings	ditto
4559	Mandal, N N	Assistant, Oriental Govt Security Life Assurance Co, Ld	2, Clive Row	ditto

No.	Names.	Style or calling.	Residence or place of business.	Religion.
4560	Mandal, Panchanan ..	.. Assistant Headmaster, Mitra Institution ..	.. 55, Harrison Road	Hindu
4561	Mandal, Prasad Gobinda ..	.. Assistant, Bengal Secretariat, Irrigation Department	.. Writers' Buildings	ditto
4562	Mandal, Priya Nath, BA ..	.. Assistant, Commercial Intelligence Deptt, India ..	.. 1, Council House Street	ditto
4563	Mandal, Radhagobinda ..	.. Surveyor, Calcutta Improvement Trust	.. 5, Clive Street	ditto
4564	Mandal, Raghu Nandan ..	.. Clerk, D A G P & T Office	.. 7, Koilaghat Street	ditto
4565	Mandal, Satish Chandra, B com.	.. Clerk, D A G P & T Office	.. 7, Koilaghat Street	ditto
4566	Mandanna, Kodandera Ganpathy	.. S A Superintendent, No. I Drawing Office, Survey of India	.. 13, Wood Street	ditto
4567	Manjhi, Jitendra Nath ..	.. Clerk, C E's Office. E I R	.. E I R House	ditto
4568	Manna, Batakrishna ..	.. Supervisor, Drainage, Calcutta Corporation ..	.. Municipal Office	ditto
4569	Manna, Chintamani ..	.. Assistant Teacher, Government School of Art ..	.. 28, Chowringhee	ditto
4570	Mannan, Abdul, MA ..	.. Lecturer, Islamia College	.. 8, Wellesley Street	Mahomedan
4571	Marar, M M N ..	.. Clerk, Prudential Assurance Co, Ld	.. Clive Buildings	Hindu
4572	Mariadas, Rajoo ..	.. Draftsman, No. I Drawing Office, Survey of India ..	.. 13, Wood Street	Christian
4573	Marick, Kanai Lal ..	.. Clerk, D A G P & T Office	.. 7, Koilaghat Street	Hindu
4574	Marick, Prosad Das ..	.. Clerk, E B R	.. 3, Koilaghat Street	ditto
4575	Marick, Ramendra Nath ..	.. Audit Clerk, E B R	.. 3, Koilaghat Street	ditto
4576	Marker, Hormusji ..	.. Salesman, Callendar's Cable & Constn Co, Ld ..	.. 2, Pollock Street	Zoroastrian
4577	Maschatak, Dhirendra Nath	.. Assistant, Begg, Dunlop & Co, Ld	.. 2, Hare Street	Hindu
4578	Master, Nariman Fakirji ..	.. Accountant, Prudential Assurance Co, Ld ..	.. Clive Buildings	Zoroastrian

4579	Masud, Mahomed	Assistant, Bengal Secretariat, Revenue Department	Writers' Buildings	Mahomedan
4580	Mathuswami, S	Clerk, D A G P & T Office	7, Koilaghat Street	Hindu
4581	Matilal, Baidyanath	Clerk, Lloyds Bank, Ld	101-1, Clive Street	ditto
4582	Matthai, Parekh Oman	Head Clerk, Royal Asiatic Society of Bengal	1, Park Street	Christian
4583	Maulik, Atul Chandra	S A Superintendent, Drawing Office, Survey of India	13, Wood Street	Hindu
4584	Maulik, Sati Nath	Accountant, K C Thapar & Bros, Ld	5, Royal Exchange Place	ditto
4585	Maulik, Sudhindra	S A S Clerk, Army Factory Accounts	6, Esplanade. East	ditto
4586	Maulik, Sudhindra Chandra	Assistant, The Eastern Bank, Ld	9, Clive Street	ditto
4587	Mehra, Badri Prasad	Clerk, Allahabad Bank, Ld	6, Royal Exchange Place	ditto
4588	Mehra Dwarka Prasad	Clerk, Allahabad Bank, Ld	6, Royal Exchange Place	ditto
4589	Mehra, Har Narayan (No. 1)	Clerk, Allahabad Bank, Ld	6, Royal Exchange Place	ditto
4590	Mehra, Jagat Narayan Lal	Clerk, Allahabad Bank, Ld	6, Royal Exchange Place	ditto
4591	Mehra, Shyam Sundar	Clerk, Allahabad Bank, Ld	6, Royal Exchange Place	ditto
4592	Mehrotra, J P	Asstt Engineer, G E C (India), Ld	Magnet House, Central Avenue (South)	ditto
4593	Mehta, D M	Offg Accountant, Central Bank of India, Ld	71, Cross Street	Zoroastrian
4594	Mehta, N D, BA	Accountant, British India General Insurance, Co, Ld	Norton Buildings	ditto
4595	Mehta, S S	Assistant. Imperial Chemical Industries (India), Ld	18, Strand Road	ditto
4596	Menon, A G	Assistant, Guest, Keen, Williams, Ld	7, Council House Street	ditto
4597	Meyer, Md Bux	General Manager, Meyer & Co	6-3, Lindsay Street	Mahomedan
4598	Miah, Abdur Rob, MA	Assistant, Office of the I-G of Police	Writers' Buildings	ditto
4599	Miah, A R	Assistant, Mackinnon, Mackenzie & Co	8, Strand Road	ditto
4600	Miah, Md Abdur Rashid, BA	Assistant, Accountant-General's Office, Bengal	Treasury Buildings	ditto

No.	Names	Style or calling.	Residence or place of business.	Religion.
4601	Miah, Tazuddin, BA	Clerk, D A G P & T Office	7, Koilaghat Street	Mahomedan
4602	Mirza, Begg Nazir	Accountant, C A O's Office, E I R	E I R House	ditto
4603	Misra, Haladhar	Clerk, Macmillan & Co, Ld	294, Bowbazar Street	Hindu
4604	Misra, Kamala Sankar, M SC	Laboratory Assistant, Zoological Survey of India	Indian Museum	ditto
4605	Misra, Nanda Kishore	Clerk, C C M's Office, E I R	E I R House	ditto
4606	Misra, Natobar	Clerk, C A O's Office, E I R	E I R House	ditto
4607	Misra, Pramatha Nath, BA	Assistant, Surgeon-General's Office, Bengal	Writers' Buildings	ditto
4608	Misra, Shiva Mangal	Clerk, C A O's Office, E I R	E I R House	ditto
4609	Misra, Surendra Nath	Clerk, Surveyor-General's Office	13, Wood Street	ditto
4610	Mitra, Adhish Chandra, BA	Assistant, Reserve Bank of India	8, Council House Street	ditto
4611	Mitra, A K	Assistant, Stewart & Co, Ld	57, Park Street	ditto
4612	Mitra, Abani Kanta, BSC	Superintendent, Maharaja Cossimbazar Polytechnic Institute	1 & 3, Nandalal Bose Lane	ditto
4613	Mitra, Akshaya Kumar	Assistant, Octavius Steel & Co, Ld	14, Old Court House Street	ditto
4614	Mitra, Amala Charan, BSC	Clerk, D A G P & T Office	7, Koilaghat Street	ditto
4615	Mitra, Amar Nath	Assistant, J Thomas & Co	8, Mission Row	ditto
4616	Mitra, Amarendra Nath	Clerk, Cox & Kings (Agents), Ld	5, Bankshall Street	ditto
4617	Mitra, Amulya Chandra, BA	Accounts Clerk, E B R	3, Kaylaghat Street	ditto
4618	Mitra, Amulya Krishna	Clerk, D A G P & T Office	7, Koilaghat Street	ditto
4619	Mitra, Anath Nath	Assistant, Account Deptt, Calcutta Corporation	Municipal Office	ditto

4620	Mitra, Anath Nath, BA	Clerk, Army Factory Accounts	6, Esplanade East	ditto
4621	Mitra, Anath Nath	Assistant, F W Heilgers & Co	1-1, Clive Street	ditto
4622	Mitra, Anil Ch	Assistant, Grahams Trading Co (India), Ld	6, Lyons Range	ditto
4623	Mitra, Apurba Krishna	Clerk, I G N & Ry Co, Ld	4, Fairlie Place	ditto
4624	Mitra, Ashutosh	Head Clerk, Advtg. Deptt , Imperial Tobacco Co (India), Ld	37, Chowringhee	ditto
4625	Mitra, Atindra Krishna	Clerk, C E S C, Ld	Victoria House	ditto
4626	Mitra, Atindra Nath	Clerk, D A G P & T Office	7, Koilaghat Street	ditto
4627	Mitra, Atul Krishna	Clerk, Ralli Brothers, Ld	16, Hare Street	ditto
4628	Mitra, Baikuntha Nath	Assistant, Babcock & Wilcox, Ld	4, Bankshall Street	ditto
4629	Mitra, Balai Chandra	Inspector, License Department, Calcutta Corporation	Municipal Office	ditto
4630	Mitra, Bankim Chandra	Inspector, Collection Department, Calcutta Corporation	Municipal Office	ditto
4631	Mitra, Basanta Kumar	Lecturer, Vidyasagar College	39, Sanker Ghose Lane	ditto
4632	Mitra, Basanta Kumar	Head Clerk, North British & Mercantile Insurance Co, Ld	101-1, Clive Street	ditto
4633	Mitra, B B	Assistant Bullion-keeper, Calcutta Mint	47, Strand Road	ditto
4634	Mitra, Bhabataran, BA	Assistant, Central Stationery Office	3, Church Lane	ditto
4635	Mitra, Bhiburi Bhusan	Court Clerk, C C M's Office, E I R	E I R House	ditto
4636	Mitra, Bholanath	Assistant, Accountant-General's Office, Bengal	Treasury Buildings	ditto
4637	Mitra, Bhuban Mohan	Assistant, Agriculture & Industries Department, Bengal	Writers' Buildings	ditto
4638	Mitra, Bhupendra Nath	Clerk, C A's Office, E I R	E I R House	ditto
4639	Mitra, Bhupendra Nath	Assistant, Babcock and Wilcox, Ld	4, Bankshall Street	ditto
4640	Mitra, Bhupendra Nath	Sub-Head, Accounts Office, E B R	3, Kaylaghat Stre t	ditto

No.	Names.	Style or calling.	Residence or place of business.	Religion.
4641	Mitra, Bhupendra Nath	Clerk, D A G P & T Office	7, Koilaghat Street	Hindu
4642	Mitra, Bhupendra Nath	Examiner of Stores, Indian Stores Department (Inspection)	6, Esplanade, East	ditto
4643	Mitra, Bihari Lal	Assistant, Accountant-General's Office, Bengal	Treasury Buildings	ditto
4644	Mitra, Bihari Lall	Assistant, Mercantile Marine Department	15-1, Strand Road	ditto
4645	Mitra, Bijayendra Nath	Inspector of Smoke Nuisances, Bengal	3, Charnock Place	ditto
4646	Mitra, Bijaymadhab, B COM (Edin)	Examiner of Accounts, I T Office	3, Government Place, West	ditto
4647	Mitra, Billeswar, LMS	Sanitary Officer, Calcutta Corporation	79, Cownwallis Street	ditto
4648	Mitra, Binode Bihari	Clerk, D A G P & T Office	7, Koilaghat Street	ditto
4649	Mitra, Birendra Krishna	Clerk, D A G P & T Office	7, Koilaghat Street	ditto
4650	Mitra, Bishnu Charan	Assistant, Indian Stores Department (Inspection)	6, Esplanade, East	ditto
4651	Mitra, Bishwanath, MA	Assistant, Accountant-General's Office, Bengal	Treasury Buildings	ditto
4652	Mitra, Bivash Chandra	Reference Clerk, P H D, Bengal	3, Charnock Place	ditto
4653	Mitra, Braja Gopal, MSc	Professor, Bangabasi College	25-1, Scott Lane	ditto
4654	Mitra, Brindaban Chandra, MA	Assistant, Ford, Rhodes,-Thornton & Co	Tower House, Chowringhee Square	ditto
4655	Mitra, Brisavasan	Asstt. Estate Superintendent, Port Commissioners' Office	Strand Road	ditto
4656	Mitra, C C	Clerk, Accounts Office, Calcutta Mint	47, Strand Road	ditto
4657	Mitra, Debendra Nath	Clerk, Marine Deptt, South British Insurance Co, Ld	5, Clive Street	ditto
4658	Mitra, Debi P	Clerk, Port Commissioners	Strand Road	ditto
4659	Mitra, Dhirendra Kumar	Clerk, C A O's Office, E I R	E I R House	ditto

4660	Mitra, Dhirendra Nath ..	.. Assistant, Accountant-General's Office, Bengal ..	.. Treasury Buildings ..	.. ditto
4661	Mitra, Durga Charan	.. Clerk, Burmah Shell Co of India, Ld ..	.. Hongkong House ..	.. ditto
4662	Mitra, Gajendra Bhusan ..	.. Stenographer, North British & Mercantile Insurance Co, Ld	.. 101-1, Clive Street ..	.. ditto
4663	Mitra, Ganesh Chandra	.. Sub-Inspector, License Department, Calcutta Corporation	.. Municipal Office ..	.. ditto
4664	Mitra, Gopi Krishna ..	.. Asst Engineer, Bengal Telephone Corporation, Ld ..	.. 146, Chittaranjan Avenue	.. ditto
4665	Mitra, Gour Kishore ..	.. Chief Clerk, P & O Banking Corporation, Ld ..	.. 1, Fairlie Place ..	.. ditto
4666	Mitra, Gouri Das ..	.. Clerk, D A G, P & T Office	.. 7, Koilaghat Street ..	.. ditto
4667	Mitra, Gunendra Krishna	.. Clerk, C A O's Office, E I R	.. E I R House	.. ditto
4668	Mitra, Haraparbati Kumar, MSC	.. Stock Verifier, Accounts Department, Calcutta Corporation	.. Municipal Office ..	.. ditto
4669	Mitra, Haridas, BSC ..	.. Assistant, Bengal Secretariat, Commerce Department	.. Writers' Buildings ..	.. ditto
4670	Mitra, Haripada	.. Clerk, Royal Insurance Co, Ld	.. 26 & 27, Dalhousie Square ..	.. ditto
4671	Mitra, Haripada ..	.. Assistant, Accounts Department, Calcutta Corporation	.. Municipal Office ..	.. ditto
4672	Mitra, Haripada ..	.. Clerk, Central Stationery Office	.. 3, Church Lane ..	.. ditto
4673	Mitra, H C ..	.. Assistant Bullion-keeper, Calcutta Mint	.. 47, Strand Road ..	.. ditto
4674	Mitra, H C ..	.. Assistant, Shaw, Wallace & Co	.. 4, Bankshall Street ..	.. ditto
4675	Mitra, Hem Chandra ..	.. Clerk, Shaw, Wallace & Co	.. 4, Bankshall Street ..	.. ditto
4676	Mitra, Janendra Nath ..	.. Clerk, C O S Office, E I R	.. E I R House	.. ditto
4677	Mitra, Jatindra Nath, MA	.. Head Objection Clerk, Assessor's Department, Calcutta Corporation	Municipal Office ..	.. ditto
4678	Mitra, Jatindra Nath, I ..	.. Clerk, I G N & Ry Co, Ld	.. 4, Fairlie Place ..	.. ditto
4679	Mitra, Jatindra Nath, II	.. Clerk, I G N & Ry Co, Ld	.. 4, Fairlie Place ..	.. ditto

No.	Names.	Style or calling.	Residence or place of business.	Religion
4680	Mitra, J K	Clerk, Mackinnon Mackenzie & Co	16, Strand Road	Hindu
4681	Mitra, J N	Broker, Queensland Insurance Co, Ld	6, Royal Exchange Place	ditto
4682	Mitra, Jyotis Chandra	Accountant, American Express Co, Inc	14, Government Place, East	ditto
4683	Mitra, Jyotis Chandra	Stenographer, C M E's Office, E I R	E I R House	ditto
4684	Mitra, Kalicharan	Stenographer, Imperial Chemical Industries (India), Ld	18, Strand Road	ditto
4685	Mitra, Kali Das	Overseer, District No II, Calcutta Corporation	22, Mirzapore Street	ditto
4686	Mitra, Kali Kinkar	Assistant, Office of the Inspector-General of Prisons, Bengal	Writers' Buildings	ditto
4687	Mitra, Kali Krishna	Clerk, Collector's Deptt., Calcutta Corporation	Municipal Office	ditto
4688	Mitra, Kali Mohan	Clerk, D A G, P & T Office	7, Koilaghat Street	ditto
4689	Mitra, Kalipada, II	Clerk, Telegraph Check Office	33, Dalhousie Square, South	ditto
4690	Mitra, Kanailal	Clerk, Jardine Skinner & Co	4, Clive Row	ditto
4691	Mitra, Kanti Chandra	Head Clerk, Improvement Trust Tribunal	6, Hastings Street	ditto
4692	Mitra, Kedar Nath, BSC	Assistant, Accountant-General's Office, Bengal	Treasury Buildings	ditto
4693	Mitra, Keshab Chandra	Assistant, Martin & Co	12, Mission Row	ditto
4694	Mitra, Khagendra Nath, BA	Assistant, Accountant-General's Office, Bengal	Treasury Buildings	ditto
4695	Mitra, Khagendra Nath	Clerk, D A G, P & T Office	7, Koilaghat Street	ditto
4696	Mitra, Kiran Chandra	Assistant, Bengal Secretariat, Appointment Department	Writers' Buildings	ditto
4697	Mitra, Kiran Chandra	Accountant, Civil Veterinary Department, Bengal	Writers' Buildings	ditto
4698	Mitra, Lalit Mohan	Assistant, Bengal Secretariat, L S-G Department	Writers' Buildings	ditto

4699	Mitra, Lalit Mohan	Clerk, Shaw, Wallace & Co	4, Bankshall Street	ditto
4700	Mitra, Lal Mohan	Clerk, Union Insurance Society of Canton, Ld	8, Clive Street	ditto
4701	Mitra, Madan Gopal	Works Manager, Lal Chand & Sons	76, Lower Circular Road	ditto
4702	Mitra, Makhan Chandra	Clerk, Imperial Bank of India	3, Strand Road	ditto
4703	Mitra, Makhan Lal	Assistant, Income-Tax Office	3, Government Place, West	ditto
4704	Mitra, Manilal, BSc	Eng Overseer, Calcutta Corporation	Hogg Street	ditto
4705	Mitra, Manmatha Nath	Clerk, Lloyds Bank, Ld	101-1, Clive Street	ditto
4706	Mitra, Manmatha Nath	Clerk, D A G, P & T Office	7, Koilaghat Street	ditto
4707	Mitra, M N	Clerk, John Dewar & Sons, Ld	12, Hare Street	ditto
4708	Mitra, N	Assistant Inspector, C E S C, Ld	Victoria House	ditto
4709	Mitra, Nanda Lal	Assistant, Reserve Bank of India	8, Council House Street	ditto
4710	Mitra, Nani Gopal	Assistant, Babcock & Wilcox, Ld	4, Bankshall Street	ditto
4711	Mitra, Narendra Nath, MA	Assessing Inspector, Calcutta Corporation	Municipal Office	ditto
4712	Mitra, Narendra Nath	Ledger-keeper, Place, Siddons & Gough	6, Lyons Range	ditto
4713	Mitra, Narendra Nath	Clerk, Imperial Bank of India	3, Strand Road	ditto
4714	Mitra, Narendra Nath, BSc	Assistant, Agriculture and Industries Department, Bengal	Writers' Buildings	ditto
4715	Mitra, Narendra Nath	Partner, Mitra Brothers	98, Clive Street	ditto
4716	Mitra, Nirad Charan	Librarian, Bengal Secretariat Library	Writers' Buildings	ditto
4717	Mitra, Niranjan Ch	Food Inspector, Calcutta Corporation	79, Cornwallis Street	ditto
4718	Mitra, Nripendra Nath	Clerk, E B R Traffic Deptt	3, Koilaghat Street	ditto

No.	Names.	Style or calling.	Residence or place of business.	Religion.
4719	Mitra, Panchanan	Assistant, Davenport & Co, Ld	6, Church Lane	Hindu
4720	Mitra, Pannalal	Clerk, D A G, P & T Office	7, Koilaghat Street	ditto
4721	Mitra, Paran Chandra	Clerk, C A O's Office, E I R	E I R House	ditto
4722	Mitra, Paresh Nath	Assistant, J Thomas & Co	8, Mission Row	ditto
4723	Mitra, P K	Special Inspector, Traffic Deptt, E B R	3, Koilaghat Street	ditto
4724	Mitra, Prabodh Kumar	Clerk, Calcutta Improvement Trust	5, Clive Street	ditto
4725	Mitra, Prafulla Chandra, BSc, GDA	Examiner of Accounts, Income-Tax Office	3, Government Place, West	ditto
4726	Mitra, Prafulla Chandra	Assistant, Accountant-General's Office, Bengal	Treasury Buildings	ditto
4727	Mitra, Prafulla Kumar, MA, BT	Assistant Master, Bethune Collegiate School	181, Cornwallis Street	ditto
4728	Mitra, Prakash Chandra, MA	Assistant, A-G's Office, Bengal	Treasury Buildings	ditto
4729	Mitra, Prakash Chandra, BA	Clerk, S S Hogg Market, Calcutta Corporation	Hogg Market	ditto
4730	Mitra, Pramatha Nath	Clerk, D A G, P & T Office	7, Koilaghat Street	ditto
4731	Mitra, Prankrishna	Assistant, Mackinnon, Mackenzie & Co	16. Strand Road	ditto
4732	Mitra, Prankumar	Assistant, Bengal Chamber of Commerce	2, Clive Street	ditto
4733	Mitra, Pratul Chandra	Assistant, Accountant-General's Office, Bengal	Treasury Buildings	ditto
4734	Mitra, Pravas Chandra	Surveyor, Calcutta Improvement Trust	5, Clive Street	ditto
4735	Mitra, Pravas Chandra, BA	Assistant, Bengal Secretariat, Police Department	Writers' Buildings	ditto
4736	Mitra, Pulin Krishna, MA	Assistant, Commercial Intelligence Dept, India	1, Council House Street	ditto
4737	Mitra, Rabindra Krishna	Clerk, Imperial Bank of India	3, Strand Road	ditto
4738	Mitra, Radha Shyam	Assistant, Senda & Co (India), Ld	135, Canning Street	ditto

4739	Mitra, R K	2nd Asstt Cashier, The P & O Banking Corpn, Ld	1, Fairlie Place	ditto
4740	Mitra, Rajani Kanta	Staff Assistant, Imperial Bank of India	3, Strand Road	ditto
4741	Mitra, Rajendra Krishna	Cashier, Volkart Brothers	11, Clive Street	ditto
4742	Mitra, Rajendra Lal	Clerk, Shaw, Wallace & Co	4, Bankshall Street	ditto
4743	Mitra, Rajendra Nath	Clerk, Telegraph Check Office	33, Dalhousie Square, South	ditto
4744	Mitra, Rajendra Nath	Offg. Accountant, Punjab National Bank, Ld	135-36, Canning Street	ditto
4745	Mitra, Rakhal Das, BSc, BT	Assistant Master, Hindu School	College Square	ditto
4746	Mitra, Rakhal Das	Stenographer, C O P S Office, E I R	E I R House	ditto
4747	Mitra, Ramapada	Clerk, Calcutta Improvement Trust	5, Clive Street	ditto
4748	Mitra, Ramesh Chandra	Clerk, Lloyds Bank, Ld	101-1, Clive Street	ditto
4749	Mitra, Ramesh Chandra	Clerk, Imperial Bank of India	3, Strand Road	ditto
4750	Mitra, Ramtarak	Overseer, Engineering Department, Port Commissioners' Office	Strand Road	ditto
4751	Mitra, Rasbihari	Clerk, Gillanders, Arbuthnot & Co	8, Clive Street	ditto
4752	Mitra, Ripon Chandra, BA	Inspector, Collection Deptt, Calcutta Corporation	Municipal Office	ditto
4753	Mitra, Rishendra Krishna	Assistant Teacher, Government School of Art	28, Chowringhee	ditto
4754	Mitra, S C	Clerk, Heatley & Gresham, Ld	6, Waterloo Street	ditto
4755	Mitra, Sanat Kumar	Sales Clerk, Lipton, Ld	9, Weston Street	ditto
4756	Mitra, Sarada Chandra	Overseer, Calcutta Improvement Trust	5, Clive Street	ditto
4757	Mitra, Sarashi Bhusan	Accountant, Automobile Association of Bengal	40, Chowringhee	ditto
4758	Mitra, Satish Chandra	Assistant, Bengal Secretariat Record Room	Writers' Buildings	ditto

No.	Names.	Style or calling	Residence or place of business.	Religion.
4759	Mitra, Satish Chandra ..	.. Assistant, Martin & Co	.. 12, Mission Row	Hindu
4760	Mitra, Satish Chandra ..	.. Clerk, Central Stationery Office	.. 3, Church Lane	ditto
4761	Mitra, Satyacharan ..	.. Clerk, Grindlay & Co, Ld	.. 6, Church Lane	ditto
4762	Mitra, Satya Prasad ..	.. Accountant, Reuters, Ld	.. 7, Hare Street	ditto
4763	Mitra, Satyendra Nath ..	.. Assistant, Commercial Intelligence Department, India	.. 1, Council House Street	ditto
4764	Mitra, Satyendra Nath ..	.. Assistant, Accounts Dept, Calcutta Corporation ..	.. Municipal Office	ditto
4765	Mitra, Satyendra Nath, BSC	.. Analyst, Calcutta Corporation	.. Municipal Office	ditto
4766	Mitra, Shachindra Nath ..	.. Assistant, The Eastern Bank, Ld	.. 9, Clive Street	ditto
4767	Mitra, Shachindra Nath ..	.. Jr Assistant Treasurer, Reserve Bank of India ..	.. 8, Council House Street	ditto
4768	Mitra, Shachindra Nath ..	.. Assistant, Imperial Library	.. 6, Esplanade, East	ditto
4769	Mitra, Shaila Bhusan ..	.. Clerk, D A G, P & T Office	.. 7, Koilaghat Street	ditto
4770	Mitra, Shaila Kumar ..	.. Eng Supervisor, Calcutta Corporation, District III ..	.. Hogg Street	ditto
4771	Mitra, Shailendra Lal ..	.. Demonstrator, Presidency College	.. 86-1, College Street	ditto
4772	Mitra, Shailendra Nath ..	.. Clerk, C A O's Office, E I R	.. E I R House	ditto
4773	Mitra, Shyama Charan, MA	.. Assessor, Income-tax Office	.. 3, Government Place, West ..	ditto
4774	Mitra, S K ..	.. Accountant, Y M C A	.. 25, Chowringhee	ditto
4775	Mitra, S K ..	.. Assistant, Balmer, Lawrie & Co, Ld	.. 103, Clive Street	ditto
4776	Mitra, S L	.. Stenographer, Y M C A	.. 25, Chowringhee	ditto
4777	Mitra, Subhendra Kumar, MSC	.. Assistant, A-G's Office, Bengal	.. Treasury Buildings	ditto
4778	Mitra, Subodh Chandra ..	.. Assistant, Imperial Chemical Industries (India), Ld..	.. 18, Strand Road	ditto
4779	Mitra, Subodh Kumar, BSC.	.. S. A. S. Clerk, Army Factory Accounts	.. 6, Esplanade, East	ditto
4780	Mitra, Sudhir Chandra ..	.. Clerk, D A G, P & T Office	.. 7, Koilaghat Street	ditto

4781	Mitra, Sudhir Chandra	Clerk, Collector's Deptt, Calcutta Corporation	Municipal Office	ditto
4782	Mitra, Sudhir Kumar	Examiner of Stores, Indian Stores Department (Inspection)	6, Esplanade, East	ditto
4783	Mitra Sudhish Chandra, MA	Assistant Superintendent, Office of the Controller of Currency	Treasury Buildings	ditto
4784	Mitra, Sunil Kumar	Stenographer, Bengal Secretariat, Finance Deptt	Writers' Buildings	ditto
4785	Mitra, Surendra Kumar	Clerk, Jardine Skinner & Co	4, Clive Row	ditto
4786	Mitra, Surendra Nath	Security Clerk, National Bank of India, Ld	104, Clive Street	ditto
4787	Mitra, Tincouri	Clerk, I G N & Ry Co, Ld	4, Fairlie Place	ditto
4788	Mitra, Upendra Nath	Sub-Head, Accounts Deptt, E B R	3, Koilaghat Street	ditto
4789	Modak, Keshab Lal	Assistant, Reserve Bank of India	8, Council House Street	ditto
4790	Mody, Harmusji Shapurji	Assistant, Construction Engineer, C E S C, Ld	Victoria House	Zoroastrian
4791	Mody, J R K	Manager, R K Mody	23, Canning Street	ditto
4792	Mohan, Tanjore Nataranjan	Accountant, K C Thapar & Bros, Ld	5, Royal Exchange Place	ditto
4793	Mohit, S A	Food Inspector, Calcutta Corporation	22, Mirzapore Street	Mahomedan
4794	Molla, M Khatib (Maulvi)	Assistant, Bengal Secretariat, L S-G Department	Writers' Buildings	ditto
4795	Molla, Nafar Ali	Clerk, D A G, P & T Office	7, Koilaghat Street	ditto
4796	Monga, Shadi Ram	Works Manager, Lalchand & Sons	76, Lower Circular Road	Hindu
4797	Moujud, Maulvi Kazi Abdul, MA	Assistant, Bengal Secretariat, Judicial Department	Writers' Buildings	Mahomedan
4798	Mukharji, A	Assistant Accountant, Manufacturers Life Insurance Co	27, Dalhousie Square	Hindu
4799	Mukharji, Abani Bhusan	Clerk, Cox & Kings (Agents), Ld	5, Bankshall Street	ditto
4800	Mukharji, Abani Kumar	Assistant, Calcutta University	Senate House	ditto
4801	Mukharji, Abani M	Clerk, Calcutta Improvement Trust	5, Clive Street	ditto
4802	Mukharji. Abhayapada	Clerk, Audit Office, E I R	E I R House	ditto

No.	Names.	Style or calling.	Residence or place of business.	Religion.
4803	Mukharji, A C	Assistant, Barry & Co	2, Fairlie Place	Hindu
4804	Mukharji, Akshaya Kumar, B Sc	Clerk, D A G, P & T Office	7, Koilaghat Street	ditto
4805	Mukharji, Akshaya Kumar	Assistant, A-G's Office, Bengal	Treasury Buildings	ditto
4806	Mukharji, Amal Kumar, BSc	Assistant, Martin & Co	12, Mission Row	ditto
4807	Mukharji, Amarendra Kumar	Clerk, C A O's Office, E I R	E I R House	ditto
4808	Mukharji, Amarendra Mohan, BA	Examiner of Accounts, Income-tax Office	3, Government Place, West	ditto
4809	Mukharji, Amarendra Nath, BSc	Clerk, D A G, P & T Office	7, Koilaghat Street	ditto
4810	Mukharji, Amulya Charan	Electrical Sub-Overseer, Western Electrical Division, P W D	Writers' Buildings	ditto
4811	Mukharji, Amulya Kumar	Head Clerk, Alfred Herbert (India), Ld	13-3, Strand Road	ditto
4812	Mukharji, Amulya Ratan	Clerk, D A G, P & T Office	7, Koilaghat Street	ditto
4813	Mukharji, Anadi	Publicity Officer, Office of the Director of Industries, Bengal	40-1A, Free School Street	ditto
4814	Mukharji, Ananda Lal	Assistant, Senda & Co (India), Ld	135, Canning Street	ditto
4815	Mukharji, Ananta Kumar, BA	2nd Head Assistant, Bengal Secretariat, Finance Department	Writers' Buildings	ditto
4816	Mukharji, Anath Nath	Proprietor, Calcutta Publicity Service	65-2A, Raja Raj Ballav Street	ditto
4817	Mukharji, Anath Nath	Accounts Clerk, E B R	3, Koilaghat Street	ditto
4818	Mukharji, Anil Chandra	Assistant, Office of the Director of Public Health, Bengal	Writers' Buildings	ditto
4819	Muhharji, Anil Krishna	Clerk, Agent's Office, E I R	E I R House	ditto
4820	Mukharji, Anukul Chandra	Assistant, A-G's Office, Bengal	Treasury Buildings	ditto
4821	Mukharji, Apar Nath	Ledger-keeper, Geo Henderson & Co, Ld	101-1, Clive Street	ditto
4822	Mukharji, Apurba Chandra, BSc	Assistant, Bengal Secretariat, Commerce Department	Writers' Buildings	ditto

4823	Mukharji, Ardhendu Bhusan	Surveyor and Estimator, Calcutta Corporation	Municipal Office	ditto
4824	Mukharji, Ardhendu Sekhar, BA	Clerk, Assessor's Department, Calcutta Corporation	Municipal Office	ditto
4825	Mukharji, Arun Prakash	Ledger Keeper, John Dickinson & Co, Ld	Grosvenor House	ditto
4826	Mukharji, Arun Prakash	Assistant, Calcutta University	Senate House	ditto
4827	Mukharji, Ashitaranjan	Overseer, Ex Engineer's Office, Dredger Division	3, Charnock Place	ditto
4828	Mukharji, Ashutos	Assistant, James Finlay & Co, Ld	1, Clive Street	ditto
4829	Mukharji, Ashutos	Accounts Clerk, E B R	3, Koilaghat Street	ditto
4830	Mukharji, Ashutos	Clerk, Agency Department, E B R	3, Koilaghat Street	ditto
4831	Mukharji, A T	Assistant, Agency Dept, Grahams Trading Co (India), Ld	6, Lyons Range	ditto
4832	Mukharji, Aswini Kumar	Auditor, George Read & Co	Avenue House, Chowringhee Square	ditto
4833	Mukharji, Atindra Nath	Head Estimator, Office of the Superintending Engineer, Central Circle, P W D.	Victoria House, Chowringhee Square	ditto
4834	Mukharji, Atul Chandra	Assistant, Macneill & Co	2, Fairlie Place	ditto
4835	Mukharji, Bagalapada	Clerk, C A O's Office, E I R	E I R House	ditto
4836	Mukharji, Balai Chand, BA	Assistant, Accountant-General's Office, Bengal	Treasury Buildings	ditto
4837	Mukharji, Balai Chandra, BA	Stenographer, Union Insurance Society of Canton, Ld	8, Clive Street	ditto
4838	Mukharji, Balaram	Clerk, Burmah Shell Co of India, Ld	Hongkong House	ditto
4839	Mukharji, Bankim Bihari	Assistant, Price, Waterhouse, Peat & Co	B-4, Clive Buildings	ditto
4840	Mukharji, Bankim Bihari	Cashier, American Express Co, Inc	14, Government Place, East	ditto
4841	Mukharji, Bankim Ch	Overseer, Calcutta Improvement Trust	5, Clive Street	ditto
4842	Mukharji, Bankim Chandra	Clerk, Burmah Shell Co of India, Ld	Hongkong House	ditto

No.	Names.	Style or calling	Residence or place of business.	Religion.
4843	Mukharji. B B	Clerk, Calcutta Mint	47, Strand Road	Hindu
4844	Mukharji, Becharam	Assistant Engineer, J C Banerjee, Ld	20, Strand Road	ditto
4845	Mukharji, Bhabananda	Accounts Clerk, E B R	3, Koilaghat Street	ditto
4846	Mukharji, Bhola Nath, BA	Clerk, Telegraph Check Office	33, Dalhousie Square South	ditto
4847	Mukharji, Bhuban Mohan	Clerk, Imperial Bank of India	3, Strand Road	ditto
4848	Mukharji, Bhuban Mohan	Head Clerk, North British & Mercantile Insurance Co, Ld	101-1, Clive Street	ditto
4849	Mukherji, Bhudeb, BL	Assessor, Income-tax Office	3, Government Place, West	ditto
4850	Mukharji, Bhupendra Kumar	Superintendent, Agent's Office, E B R	3, Koilaghat Street	ditto
4851	Mukharji, Bhupendra Nath	Assistant, Office of the Inspector-General of Registration, Bengal.	Writers' Buildings	ditto
4852	Mukharji, Bhupendra Nath	Assistant, Bengal Secretariat, Political Department	Writers' Buildings	ditto
4853	Mukharji, Bhutnath	Assistant, A-G's Office, Bengal	Treasury Buildings	ditto
4854	Mukharji, Bibhuti Bhusan	Clerk, Burmah Shell Co of India, Ld	Hongkong House	ditto
4855	Mukharji, Bibhuti Bhusan	Assistant, Price, Waterhouse, Peat & Co	B-4, Clive Buildings	ditto
4856	Mukharji, Bibhutibhusan	Assistant Cashier, Macneill & Co	2, Fairlie Place	ditto
4857	Mukharji, Bibhutibhusan	Clerk, Traffic Deptt, E B R	3, Koilaghat Street	ditto
4858	Mukharji, Bibhuti Bhusan, BA	Assistant, Accountant-General's Office, Bengal	Treasury Buildings	ditto
4859	Mukharji, Bibhutibhusan, BA	Clerk, Agent's Office, E B R	3, Koilaghat Street	ditto
4860	Mukharji, Bijali Bhusan, BSC	Clerk, D A G, P & T Office	7, Koilaghat Street	ditto
4861	Mukharji, Bijan Lal	Overseer, Royal Calcutta Turf Club	11, Russel Street	ditto
4862	Mukharji, Bijaya Gopal	Head Clerk, Stores Department, E B R	3, Koilaghat Street	ditto

4863	Mukharji, Bijaya Krishna	Assistant, Martin & Co	12, Mission Row	ditto
4864	Mukharji, Bijaya Kumar	Clerk, C A O's Office, E I R	E I R Office	ditto
4865	Mukharji, Bimal Chandra	Assistant, Accountant-General's Office, Bengal	Treasury Buildings	ditto
4866	Mukharji, Binaya Krishna	Sub-Inspector of Schools, Calcutta	40-1A, Free School Street	ditto
4867	Mukharji, Binayak Chandra	Assistant, Bengal Secretariat, Finance Department	Writers' Buildings	ditto
4868	Mukharji, Binode Bhusan, BA	Assistant, Accountant-General's Office, Bengal	Treasury Buildings	ditto
4869	Mukharji, Bishnu Charan	Surveyor, Port Commissioners' Office	Strand Road	ditto
4870	Mukharji, B N	Assistant, Salesman, Marshal Sons & Co (India), Ld	99, Clive Street	ditto
4871	Mukharji, Bon Bihari	Sub-Head, Accounts Department, E B R	3, Kaylaghat Street	ditto
4872	Mukharji, Brajabihari	Clerk, Calcutta Improvement Trust	5, Clive Street	ditto
4873	Mukharji, Brajendra Nath	Assistant, Office of the Inspector-General of Registration, Bengal	Writers' Buildings	ditto
4874	Mukharji, Brindaban Chandra	Assistant, Imperial Bank of India	3, Strand Road	ditto
4875	Mukherji, Brindaban Ch, DSc	Demonstrator, Ripon College	24, Harrison Road	ditto
4876	Mukharji, Chandi Charan	Assistant, Lionel Edwards, Ld	D-1, Clive Buildings	ditto
4877	Mukharji, Chandi Charan	Salesman, Roneo, Ld	32-1, Dalhousie Square	ditto
4878	Mukharji, Dasharathi	Assistant, Office of the Director of Industries, Bengal	40-1A, Free School Street	ditto
4879	Mukharji, Debendra Nath	Clerk, Burmah Shell Co of India, Ld	Hongkong House	ditto
4880	Mukharji, Debendra Nath (I) BSc	Clerk, D A G, P & T Office	7, Kaylaghat Street	ditto
4881	Mukharji, Debendra Nath, BA	Assistant, Accountant-General's Office, Bengal	Treasury Buildings	ditto
4882	Mukharji, Dev Das	Clerk, C A's Office, E I R	E I R House	ditto
4883	Mukharji, Dev Dev, MSc	Technical Assistant, Zoological Survey of India	Indian Museum	ditto

No.	Names.	Style or calling.	Residence or place of business.	Religion.
4884	Mukharji, Dhirendra Chandra	Assistant, Office of the Inspector-General of Prisons, Bengal	Writers' Buildings	Hindu
4885	Mukharji, Dhirendra Krishna	Professor, Bangabasi College	25-1, Scott Lane	ditto
4886	Mukharji, Dhirendra Kumar	Assistant, Macneill & Co	2, Fairlie Place	ditto
4887	Mukharji, Dhirendra Nath	Clerk, Burmah Shell Co of India, Ld	Hongkong House	ditto
4888	Mukharji, Dhirendra Nath	Assistant, Calcutta University	Senate House	ditto
4889	Mukharji, Dhirendra Nath	Assistant, Accounts Department, Calcutta Corporation	Municipal Office	ditto
4890	Mukharji, Dhirendra Nath	Shorthand Typist, Presidency College	86-1, College Street	ditto
4891	Mukharji, Dhirendra Nath	Clerk, C A's Office, E I R	E I R House	ditto
4892	Mukharji, Durga Charan, BA	Assistant, Controller's Office, Calcutta University	Senate House	ditto
4893	Mukharji, Durgadas, BSc	Assistant, Accountant-General's Office, Bengal	Treasury Buildings	ditto
4894	Mukharji, Durgapada	Accountant, Robert Kearsley & Co	11, Clive Street	ditto
4895	Mukharji, Durgapada	Estimator, Office of Superintending Engineer, P W D, Central Circle	Victoria House, Chowringhee Square	ditto
4896	Mukharji, Durgapada	Clerk, Burmah Shell Co of India, Ld	Hongkong House	ditto
4897	Mukharji, Dwarka Nath, MSc	Professor, Vidyasagar College	39, Shankar Ghose Lane	ditto
4898	Mukharji, Fani Bhusan	Clerk, D A G, P & T Office	7, Kaylaghat Street	ditto
4899	Mukharji, Ganendra Bhusan	In charge, Process Engraving Section, Photo-Litho Office, Survey of India.	14, Wood Street	ditto
4900	Mukharji, Girija Sankar	Clerk, C C M's Office, E I R	E I R House	ditto
4901	Mukharji, Gobinda Chandra	Assistant, Accountant-General's Office, Bengal	Treasury Buildings	ditto
4902	Mukharji, Gobinda Prasad	Accountant, Geological Survey of India	27, Chowringhee	ditto

4903	Mukharji, Gokulananda ..	Assistant, Office of the Geological Survey of India ..	27, Chowringhee .	ditto
4904	Mukharji, Gopal Chandra, BA	Clerk, D A G P & T Office	7, Koilaghat Street ..	ditto
4905	Mukharji, Gopal Chandra	Clerk, Turner, Morrison & Co, Ld	6, Lyons Range ..	ditto
4906	Mukharji, Gopeshwar ..	Clerk, C O P S's Office, E I R	E I R House	ditto
4907	Mukharji, Gopeshwar ..	Assistant, Office of the Superintending Engineer, Presidency Circle P W D	Writers' Buildings ..	ditto
4908	Mukharji, Haradeb ..	Clerk, Grindlay & Co, Ld	6, Church Lane ..	ditto
4909	Mukharji, Haradhan ..	Assistant, Calcutta Improvement Trust	5, Clive Street ..	ditto
4910	Mukharji, Haradhan, B Com	Passed Accounts Clerk, Workshops Electrical Division	Writers' Buildings ..	ditto
4911	Mukharji, Haradhan, BSc	Assistant Analyst, Bengal Public Health Laboratory	Chittaranjan Avenue ..	ditto
4912	Mukharji, Haran Chandra	Publicity Officer, Bengal Co-operative Organisation Journal	102-1, Clive Street ..	ditto
4913	Mukharji, Haraprasad ..	Assistant, Bengal Secretariat, Revenue Department	Writers' Buildings ..	ditto
4914	Mukharji, Harendra Bhusan	Clerk, C M E's Office, E I R	E I R House	ditto
4915	Mukharji, Harendra Nath	Stenographer, Reed, Ward & Co	6, Lyons Range ..	ditto
4916	Mukharji, Harendra Nath	Sanitary Officer, Calcutta Corporation	79, Cornwallis Street ..	ditto
4917	Mukharji, Harendra Nath	Assistant, Bengal Telephone Corporation, Ld ..	8, Hare Street ..	ditto
4918	Mukharji, Hari Charan ..	Assistant, Holmes, Wilson & Co, Ld	Norton Buildings ..	ditto
4919	Mukharji, Hari Charan ..	Assistant Teacher, Government School of Art ..	28, Chowringhee ..	ditto
4920	Mukharji, Haridas ..	Demonstrator, Presidency College	86-1, College Street ..	ditto
4921	Mukharji, Haridas ..	Clerk, D A G P & T Office	7, Koilaghat Street ..	ditto
4922	Mukharji, Haridas ..	Assistant, Office of the I G of Police	Writers' Buildings ..	ditto
4923	Mukharji, Haridhan ..	Clerk, Shaw, Wallace & Co	4, Bankshall Street ..	ditto
4924	Mukharji, Harigopal, BA	Clerk, Bill Department, Calcutta Corporation ..	Municipal Office ..	ditto
4925	Mukharji, Harihar ..	Clerk, Lloyds Bank, Ld	101-1, Clive Street ..	ditto
4926	Mukharji, Hari Mohan ..	Assistant, Bengal Secretariat, Finance Department	Writers' Buildings ..	ditto

No.	Names.	Style or calling.	Residence or place of business.	Religion.
4927	Mukharji, Hari Mohan ..	Assistant, Macneill & Co ..	2, Fairlie Place ..	Hindu
4928	Mukharji, Hari Nath ..	Clerk, D A G P & T Office ..	7, Koilaghat Street ..	ditto
4929	Mukharji, Haripada, BA ..	Jr Superintendent, Reserve Bank of India ..	8, Council House Street ..	ditto
4930	Mukharji, Hariprosad ..	Head Assistant, Civil Veterinary Deptt, Bengal ..	Writers' Buildings ..	ditto
4931	Mukharji, Hari Shankar ..	Clerk, Shaw, Wallace & Co ..	4, Bankshall Street ..	ditto
4932	Mukharji, Harish Chandra ..	Assistant, Accountant-General's Office, Bengal ..	Treasury Buildings ..	ditto
4933	Mukharji, Hem Chandra..	Assistant, Accountant-General's Office, Bengal ..	Treasury Buildings ..	ditto
4934	Mukharji, Hem Chandra ..	Clerk, Agent's Office, E I R ..	E I R House ..	ditto
4935	Mukharji, Hemendra Chandra, MA ..	Lecturer, City College ..	102-1, Amherst Street ..	ditto
4936	Mukharji, Heramba Nath ..	Accountant, Executive Engineer's Office, City Division, P W D	Writers' Buildings ..	ditto
4937	Mukharji, Himangshu Kumar ..	Assistant, Controller's Office, Calcutta University ..	Senate House ..	ditto
4938	Mukharji, Hiranmay ..	Assistant, Accountant-General's Office, Bengal ..	Treasury Buildings ..	ditto
4939	Mukharji, H P ..	Assistant, Barry & Co ..	2, Fairlie Place ..	ditto
4940	Mukharji, Hridaya Mohan ..	Assistant, Mackinnon, Mackenzie & Co ..	16, Strand Road ..	ditto
4941	Mukharji, I C ..	Assistant, Barry & Co ..	2, Fairlie Place ..	ditto
4942	Mukharji, Indu Bhusan, MSc ..	Lecturer, Calcutta Technical School ..	110, Surendra Nath Banerjee Road ..	ditto
4943	Mukharji, Indu Bhusan ..	Clerk, Imperial Bank of India ..	3, Strand Road ..	ditto
4944	Mukharji, Indu Bh ..	Clerk, Telegraph Check Office ..	33, Dalhousie Square, South ..	ditto
4945	Mukharji, Jagadindu Bhusan, BSc	Examiner of Stores, Indian Stores Deptt ..	6, Esplanade East ..	ditto
4946	Mukharji, Jagannath ..	Clerk, Telegraph Check Office ..	33, Dalhousie Square (South) ..	ditto
4947	Mukharji, Janaki Kumar..	Clerk, Engineer's Office, E B R ..	3, Kaylaghat Street ..	ditto

4948	Mukharji, Jatadhari	Assistant, Calcutta Improvement Trust	5, Clive Street	ditto
4949	Mukharji, Jatindra Kumar	Assistant Superintendent, Agency Department, E B R	3, Kaylaghat Street	ditto
4950	Mukharji, Jatindra Mohan	Salesman, C C Wakefield & Co, Ld	7, Royal Exchange Place	Christian
4951	Mukharji, Jatindra Nath, BA	Assistant, Bengal Secretariat, Judicial Department	Writers' Buildings	Hindu
4952	Mukharji, Jatindra Nath	Stenographer, Bengal Secretariat, Finance Department	Writers' Buildings	ditto
4953	Mukharji, Jatindra Nath, I	Clerk, D A G P & T Office	7, Koilaghat Street	ditto
4954	Mukharji, Jatindra Nath, II	Clerk, D A G P & T Office	7, Koilaghat Street	ditto
4955	Mukharji, Jatindra Nath	Clerk, Shaw, Wallace & Co	4, Bankshall Street	ditto
4956	Mukharji, Jatindra Nath	Clerk, Gillanders, Arbuthnot & Co	8, Clive Street	ditto
4957	Mukharji, Jatindra Nath, BA	Assistant, Bengal Secretariat, Irrigation Department	Writers' Buildings	ditto
4958	Mukharji, Jatindra Nath	Clerk, Lloyds Bank, Ld	101-1, Clive Street	ditto
4959	Mukharji, Jatindra Nath, II	Clerk, Telegraph Check Office	33, Dalhousie Square, South	ditto
4960	Mukharji, Jaya Krishna	Clerk, Turner, Morrison & Co, Ld	6, Lyons Range	ditto
4961	Mukharji, Jibananda	Assistant, Agriculture and Industries Department, Bengal	Writers' Buildngs	ditto
4962	Mukharji, Jibandhone	Stenographer, Burmah Shell Co of India, Ld	Hongkong House	ditto
4963	Mukharji, Jiban Krishna	Accounts Clerk, E B R	3, Koilaghat Street	ditto
4964	Mukharji, Jitendra Lal	Clerk, D A G P & T Office	7, Koilaghat Street	ditto
4965	Mukharji, Jitendra Nath	Cashier, Improvement Trust Tribunal	6, Hastings Street	ditto

No.	Names.	Style or calling.	Residence or place of business.	Religion.
4966	Mukharji, Jitendra Nath, BL	Assistant Master, Hindu School	College Square	Hindu
4967	Mukharji, Jitendra Nath	Assistant, Accounts Department, Calcutta Corporation	Municipal Office	ditto
4968	Mukharji, Jitendra Nath, BA	Assistant, Office of the Inspector-General of Police	Writers' Buildings	ditto
4969	Mukharji, Jitendra Nath	Assistant, Continental Commercial Co	14-2, Old China Bazar Street	ditto
4970	Mukharji, J N	Assistant, Barry & Co	2, Fairlie Place	ditto
4971	Mukharji, J N	Clerk, C E S C, Ld	Victoria House	ditto
4972	Mukharji, Jnanoda Prosad BA	Clerk, D A G P & T Office	7, Koilaghat Street	ditto
4973	Mukharji, Jogesh Chandra, BA	Head Clerk, I T Office	1, Hare Street	ditto
4974	Mukharji, Jogesh Chandra	Head Clerk, I-B Petroleum Co, Ld	8, Clive Street	ditto
4975	Mukharji, Jugal Kishore	Assistant, Burn & Co., Ld	12, Mission Row	ditto
4976	Mukharji, Juganath, BA	Clerk, Telegraph Check Office	33, Dalhousie Square, South	ditto
4977	Mukharji, Kala Chand	Assistant, Accountant-General's Office, Bengal	Treasury Buildings	ditto
4978	Mukharji, Kali Charan	Assistant, Reserve Bank of India	8, Council House Street	ditto
4979	Mukharji, Kalidas	Clerk, Calcutta Improvement Trust	5, Clive Street	ditto
4980	Mukharji, Kalidas	Assistant, Andrew Yule & Co, Ld	8, Clive Row	ditto
4981	Mukharji, Kalikesh	Assistant, Central Forms Stores	166, Dharamtalla Street	ditto
4982	Mukharji, Kaliprasanna	Assistant, Martin & Co	12, Mission Row	ditto
4983	Mukharji, Kaliprasanna	Assistant, Calcutta University	Senate House	ditto
4984	Mukharji, Kamala Kanta	Lecturer, Calcutta University	Senate House	ditto
4985	Mukharji, Kamalapati	Clerk, C O P S's Office, E I R	E I R House	ditto
4986	Mukharji, Kamal Krishna, B Sc	Inspector, Collection Department, Calcutta Corporation	Municipal Office	ditto
4987	Mukharji, Kamini Kumar	Divisional Accountant, Accountant-General's Office, Bengal	Treasury Buildings	ditto
4988	Mukharji, Kanai Lal	Assistant, TM's Department, Port Commissioner's Office	Strand Road	ditto

4989	Mukharji, Karali Mohan ..	Cashier, The I-B Petroleum Co, Ld	8, Clive Street	ditto
4990	Mukharji, Kartic Chandra, BL	Stock Verifier, Accounts Department, Calcutta Corporation	Municipal Office	ditto
4991	Mukharji, Karunamaya ..	Assistant, Octavius Steel & Co, Ld	14. Old Court House Street ..	ditto
4992	Mukharji, K C ..	Assistant, Jessop & Co, Ld	93, Clive Street	ditto
4993	Mukharji, K D ..	Clerk, Accounts Office, Calcutta Mint	47, Strand Road	ditto
4994	Mukharji, Keshab Chandra	Assistant, Income Tax Office	6, Esplanade East	ditto
4995	Mukharji, Kiran Kumar, BA	Head Assistant, Mathematical Instrument Office ..	15, Wood Street	Christian
4996	Mukharji, Khagendra Nath	Sr Clerk, Reserve Bank of India	8, Council House Street	Hindu
4997	Mukharji, Krishna Lal, BA	Clerk, City Architect's Department, Calcutta Corporation	Municipal Office	ditto
4998	Mukharji, Kshetra Dhan	Accountant, North British & Mercantile Insurance Co, Ld	101-1, Clive Street	ditto
4999	Mukharji, Kshetra Mohan	Assistant Cashier, Landale & Clark, Ld ..	11, Clive Street	ditto
5000	Mukharji, Kshetra Mohan, MSc	Clerk, D A G, P & T Office	7, Kaylaghat Street	ditto
5001	Mukharji, Kshetra Nath ..	Assistant, Bird & Co	1-1, Clive Street	ditto
5002	Mukharji, Kshetra Mohan	Clerk, Mackenzie, Lyall & Co	5, Mission Row	ditto
5003	Mukharji, Kshirode Mohan	Assistant Engineer, Martin & Co	12, Mission Row	ditto
5004	Mukharji, Kshitish Chandra, BL	Assistant, Commercial Intelligence Department, India	1, Council House Street	ditto
5005	Mukharji, Lalit Behary ..	Clerk, Burmah Shell Co of India, Ld	Hongkong House	ditto
5006	Mukharji, Lalit Kumar ..	Assistant Superintendent, Agent's Office, E B R ..	3, Kaylaghat Street	ditto
5007	Mukharji, Lalit Mohan ..	Estimator, Calcutta Improvement Trust	5, Clive Street	ditto
5008	Mukharji, Lalit Mohan ..	Assistant, Grahams Trading Co (India), Ld ..	6, Lyons Range	ditto

No.	Names.	Style or calling.	Residence or place of business.	Religion.
5009	Mukharji, Lalit Mohan	Clerk, Turner, Morrison & Co, Ld	6, Lyons Range	Hindu
5010	Mukharji, Lalit Mohan, BA	2nd Assistant, Office of the Commissioner of Income-tax	Imperial Secretariat Buildings	ditto
5011	Mukharji, Lal Mohan	Accountant, Stewart & Co	8, Clive Street	ditto
5012	Mukharji, Lal Mohan	Clerk, Harrisons and Crossfield	6, Church Lane	ditto
5013	Mukharji, L M	Clerk, McGregor & Balfour, Ld	11, Clive Street	ditto
5014	Mukharji, Makhanlal	Assistant Book Keeper, Imperial Tobacco Co of India, Ld	37, Chowringhee	ditto
5015	Mukharji, Makhan Lal	Accountant, Bengal Chamber of Commerce	2, Clive Street	ditto
5016	Mukharji, Makhanlal	Clerk, Imperial Bank of India	3, Strand Road	ditto
5017	Mukharji, Manamohan	Assistant, Bird & Co	1-1, Clive Street	ditto
5018	Mukharji, Manamohan	Assistant, Bengal Secretariat, Finance Department	Writers' Buildings	ditto
5019	Mukharji, Manamohan	Assistant, Reed, Ward & Co	6, Lyons Range	ditto
5020	Mukharji, Manamohan	Clerk, Gillanders, Arbuthnot & Co	8, Clive Street	ditto
5021	Mukharji, Manatosh	Advt Inspector, Traffic Department, E B R	3, Kaylaghat Street	ditto

5022	Mukharji, Manimohan	Clerk, Agent's Office, E B R	3, Kaylaghat Street	ditto
5023	Mukharji, Manindra Narayan, I, BA	Clerk, D A G P & T Office	7, Kaylaghat Street	ditto
5024	Mukharji, Manindra Nath	Assistant, Accountant-General's Office, Bengal	Treasury Buildings	ditto
5025	Mukharji, Manindra Nath, BA	Inspector Surveyor, I T Office	3, Government Place, West	ditto
5026	Mukharji, Manindra Nath, BA	Assessor, Income-tax Office	3, Government Place, West	ditto
5027	Mukharji, Manmatha Nath	Clerk, C O S Office, E I R	E I R House	ditto
5028	Mukharji, Manmatha Nath	Assistant, Bird & Co	1-1, Clive Street	ditto
5029	Mukharji, Mati Lal	Assistant. Royal Insurance Co, Ld	26 and 27, Dalhousie Square	ditto
5030	Mukharji, Mati Lal, BA	Accounts Clerk, E B R	3, Koilaghat Street	ditto
5031	Mukharji, Mati Lal	Assistant, Excise Commissioner's Office, Bengal	Writers' Buildings	ditto
5032	Mukharji, M N	Clerk, Calcutta Mint	47, Strand Road	ditto
5033	Mukharji, Mohan Lal	Clerk, Telegraph Check Office	33, Dalhousie Square, South	ditto
5034	Mukharji, Mohit Kumar	Head Clerk, Lloyds Bank, Ld	101-1, Clive Street	ditto
5035	Mukharji, Mrityunjaya	Assistant, Cox and Kings (Agents), Ld	5, Bankshall Street	ditto
5036	Mukharji, Murari Mohan	Assistant, Calcutta University	Senate House	ditto
5037	Mukharji, Nagendra Nath, II, BA	Clerk, D A G P & T Office	7, Kaylaghat Street	ditto
5038	Mukharji, Nagendra Nath	Assistant, Mackinnon, Mackenzie & Co	16, Strand Road	ditto
5039	Mukharji, Nagendra Nath	Clerk, Imperial Bank of India	3, Strand Road	ditto
5040	Mukharji, Nagendra Nath	Assistant, Central Forms Store	166, Dharamtala Street	ditto

No.	Names.	Style or calling.	Residence or place of business.	Religion.
5041	Mukharji, Nalini Mohan ..	.. Assistant, Ludlow Jute Co, Ld ..	.. 7, Royal Exchange Place ..	Hindu
5042	Mukharji, Nanda Gopal ..	.. Head Clerk, Traffic Deptt, E B R	.. 3, Kaylaghat Street	ditto
5043	Mukharji, Nanda Lal ..	.. Clerk, Burmah Shell Co of India, Ltd	.. Hongkong House	ditto
5044	Mukharji, Nanda Lal ..	.. Assistant, Accounts Department, Calcutta Corporation	.. Municipal Office	ditto
5045	Mukharji, Nanda Lal ..	.. Assistant, Central Stationery Office	.. 3, Church Lane	ditto
5046	Mukharji, Nani Gopal ..	.. Assistant, Bird & Co	.. 1-1, Clive Street	ditto
5047	Mukharji, Nani Gopal, II	.. Clerk, D A G P & T Office	.. 7, Kaylaghat Street	ditto
5048	Mukharji, Nani Gopal ..	.. Professor, Bangabasi College	.. 25-1, Scott Lane	ditto
5049	Mukharji, Nani Gopal ..	.. Assistant, Office of the Controller of Currency ..	.. Treasury Buildings	ditto
5050	Mukharji, Narayan C ..	.. Cashier and Accountant, Linotype & Machinery, Ltd.	.. 21, Bowbazar Street	ditto
5051	Mukharji, Narayan Das, BA	.. Teacher, Mitra Institution	.. 55, Harrison Road	ditto
5052	Mukharji, Narayan Das, BA	.. Clerk, D A G P & T Office	.. 7, Kaylaghat Street	ditto
5053	Mukharji, Narendra Krishna	.. Accountant, Licensed Measurers Department ..	.. 2, Clive Street	ditto
5054	Mukharji, Narendra Nath	.. Clerk, D A G P & T Office	.. 7, Kaylaghat Street	ditto
5055	Mukharji, Narendra Nath	.. Overseer, Engineering Department, Port Commissioners' Office	.. Strand Road	ditto
5056	Mukharji, Narendra Nath	.. Assistant, Bengal Secretariat, Finance Department ..	.. Writers' Buildings	ditto
5057	Mukharji, Narendra Nath, I	.. Assistant, Bengal Secretariat, P W D	.. Writers' Buildings	ditto
5058	Mukharji, Narendra Nath, II	.. Assistant, Bengal Secretariat, P W D	.. Writers' Buildings	ditto
5059	Mukharji, Narendra Nath	.. Clerk, Imperial Bank of India	.. 3, Strand Road	ditto
5060	Mukharji, Nepal Chandra, BA	.. Clerk, Bill Department, Calcutta Corporation ..	.. Municipal Office	ditto
5061	Mukharji, Netai Gopal ..	.. Clerk, Calcutta Improvement Trust	.. 5, Clive Street	ditto
5062	Mukharji, Nirapada ..	.. Assistant Estimator, Calcutta Improvement Trust ..	.. 5, Clive Street	ditto
5063	Mukharji, Nirmal Chandra	.. Assistant, Balmer, Lawrie & Co, Ld ..	.. 103, Clive Street	ditto
5064	Mukharji, Nirmal Shashi, BA	.. Assistant, Surveyor-General's Office	.. 13, Wood Street	ditto

5065	Mukharji, Nripal Chandra	Assistant, Accountant-General's Office, Bengal	Treasury Buildings		ditto
5066	Mukharji, Nripendra Mohan	Assistant, Calcutta University	Senate House		ditto
5067	Mukharji, Nripendra Nath	Clerk, Secretary's Department, Port Commissioners' Office	Strand Road		ditto
5068	Mukharji, Nripendra Nath	Clerk, D A G P & T Office	7, Koilaghat Street		ditto
5069	Mukharji, Nritya Gopal	Surveyor and Estimator, Calcutta Corporation	Municipal Office		ditto
5070	Mukharji, Panchanan	Assistant, Office of the Director of Public Health, Bengal	Writers' Buildings		ditto
5071	Mukharji, Panchanan	Clerk, Pre-Audit, Port Commissioners' Office	Strand Road		ditto
5072	Mukharji, Panchu Gopal	Assistant, Bird & Co	1-1, Clive Street		ditto
5073	Mukharji, Panchu Gopal	Assistant, Begg Dunlop & Co, Ld	2, Hare Street		ditto
5074	Mukharji, Panchu Gopal	Assistant, Account's Deptt, Bengal Secretariat	Writers' Buildings		ditto
5075	Mukharji, Panchu Gopal	Clerk, C A 's Office, E I R	E I R House		ditto
5076	Mukharji, Paritosh	Clerk, D A G P & T Office	7, Koilaghat Street		ditto
5077	Mukharji, Phani Bhusan	Assistant, Calcutta Improvement Trust	5, Clive Street		ditto
5078	Mukharji, Phani Bhusan	Estimator, Executive Engineer's Office, City Division P W D	Writers' Buildings		ditto
5079	Mukharji, Phani Bhusan	Head Clerk, Roberts, McLean & Co, Ld	101, Clive Street		ditto
5080	Mukharji, Phani Bhusan	Professor, Bangabasi College	25-1, Scott Lane		ditto
5081	Mukharji, Phanindra Nath	Clerk, Burmah Shell Co of India, Ld	Hongkong House		ditto
5082	Mukherji, Phanindra Nath	Director, Advance Engineering Works, Ld	Mercantile Buildings		ditto
5083	Mukharji, P C	Assistant, Jessop & Co, Ld	93, Clive Street		ditto
5084	Mukharji, Phelaram	Inspector, Collection Department, Calcutta Corporation	Municipal Office		ditto
5085	Mukharji, Prabhat Chandra	Assistant, Accounts Department, Calcutta Corporation	Municipal Office		ditto

No.	Names.	Style or calling.	Residence or place of business.	Religion.
5086	Mukharji, Prabhat Chandra	Clerk, Traffic Department, E B R	3, Koilaghat Street	Hindu
5087	Mukharji, Prabodh Chandra	Head Clerk, Traffic Department, E B R	3, Kaylaghat Street	ditto
5088	Mukharji, Prabodh Chandra	Clerk, Ralli Bros, Ld	16, Hare Street	ditto
5089	Mukharji, Prabodh Chandra, MA	Assistant, Calcutta University	Senate House	ditto
5090	Mukharji, Prabodh Kumar	Assistant, Bengal Secretariat, Finance Department	Writers' Buildings	ditto
5091	Mukharji, Prafulla Dhan	Clerk, Place, Siddons & Gough	6, Lyons Range	ditto
5092	Mukharji, Prafulla Kumar	Stenographer, Imperial Chemical Industries (India), Ld	18, Strand Road	ditto
5093	Mukharji, Prafulla Kumar	Assistant, Bird & Co	1-1, Clive Street	ditto
5094	Mukharji, Prafulla Kumar	Clerk, D A G P & T Office	7, Koilaghat Street	ditto
5095	Mukharji, Prafulla Kumar	Stenographer, Imperial Chemical Industries (India), Ld	18, Strand Road	ditto
5096	Mukharji, Prafulla Kumar	Cashier, Carr & Co, Ld	3, Waterloo Street	ditto
5097	Mukharji, Prafulla Kumar	Assistant, Mackinnon Mackenzie & Co	16, Strand Road	ditto
5098	Mukharji, Prakash Chandra	Clerk, Calcutta Improvement Trust	5, Clive Street	ditto
5099	Mukharji, Pran Krishna	Head Clerk, Mechl Department, E B R	3, Kaylaghat Street	ditto
5100	Mukharji, Prasad Das	Clerk, Turner, Morrison & Co, Ld	6, Lyons Range	ditto
5101	Mukharji, Prativa Ch	Clerk, D A G P & T Office	7, Koilaghat Street	ditto
5102	Mukharji, Pravas Chandra	Head Clerk, Traffic Department, E B R	3, Kaylaghat Street	ditto
5103	Mukharji, Pravat Chandra, MA	Clerk, Telegraph Check Office	33, Dalhousie Square, South	ditto

5104	Mukharji, Pulin Bihari	Assistant, Commercial Intelligence Department	1, Council House Street	ditto
5105	Mukharji, Pulin Bihari	Clerk, W T Henley's Telegraph Works, Co, Ld	Old Court House Corner	ditto
5106	Mukharji, Puranjan, B E	Overseer, Calcutta Improvement Trust	5, Clive Street	ditto
5107	Mukharji, Purna Ch	Clerk, Calcutta Improvement Trust	5, Clive Street	ditto
5108	Mukharji, Purna Chandra	Assistant, Accountant-General's Office, Bengal	Treasury Buildings	ditto
5109	Mukharji, Purna Chandra	Clerk, Place, Siddons & Gough	6, Lyons Range	ditto
5110	Mukharji, Radha Charan, MA	Assistant, Calcutta University	Senate House	ditto
5111	Mukharji, Radha Krishna, BA	Assistant, Bengal Secretariat, Finance Department	Writers' Buildings	ditto
5112	Mukharji, Raghubar, BA	Passed Accounts Clerk, Workshops Electrical Division	Writers' Buildings	ditto
5113	Mukharji, Raghunath	Salesman, Dodge & Seymour, Ld	Tower House, Chowringhee Square	ditto
5114	Mukharji, Rajendra Nath	Assistant, Bird & Co	1-1, Clive Street	ditto
5115	Mukharji, Rajkumar, BA	Assistant, Controller's Office, Calcutta University	Senate House	ditto
5116	Mukharji, Rajkumar	Clerk, Engineering Department, Port Commissioners' Office	Strand Road	ditto
5117	Mukharji, Ramani Mohan	Peshkar, Improvement Trust Tribunal	6, Hastings Street	ditto
5118	Mukharji, Ramani Mohan	Head Clerk, Ludlow Jute Co, Ld	7, Royal Exchange Place	ditto
5119	Mukharji, Ramesh Chandra	Head Clerk, Executive Engineer's Office, Hijli Division	Writers' Buildings	ditto
5120	Mukharji, Rampada	Assistant, Accountant-General's Office, Bengal	Treasury Buildings	ditto

No.	Names.	Style or calling.	Residence or place of business.	Religion.
5121	Mukharji, Rana Behari ..	Building Inspector, Calcutta Corporation	Municipal Office	Hindu
5122	Mukharji, Rashbihari, B A	Clerk, D A G P & T Office	7, Kaylaghat Street	ditto
5123	Mukharji, Rashbihari ..	Clerk, Collection Department, Calcutta Corporation	Municipal Office	ditto
5124	Mukharji, Ratneshwar ..	Clerk, Telegraph Check Office	33, Dalhousie Square, South	ditto
5125	Mukharji, R G, MSc., AMIE	Head Estimator, Superintending Engineer's Office, Electrical Circle, Bengal	Writers' Buildings	ditto
5126	Mukharji, Robin	Assistant, Martin & Co	12, Mission Row	ditto
5127	Mukharji, Robindra Nath	Stenographer, Burmah Shell Co of India, Ld	Hongkong House	ditto
5128	Mukharji, R P ..	Assistant, Butterworth & Co, (India), Ld	Chowringhee Square	ditto
5129	Mukharji, Sachchidananda, M Sc	Assistant Teacher, Bethune Collegiate School	181, Cornwallis Street	ditto
5130	Mukharji, Sachi Pati ..	Contract Inspector, Bengal Telephone Corporation, Ld	8, Hare Street	ditto
5131	Mukharji, Sadhandhan ..	Assistant, Bird & Co	1-1, Clive Street	Christian
5132	Mukharji, Saibadas	Assistant, Calcutta University	Senate House	Hindu
5133	Mukharji, Sajani Mohan ..	Assistant, Ludlow Jute Co, Ld	7, Royal Exchange Place	ditto
5134	Mukharji, Sambhunath	Clerk, Telegraph Check Office	33, Dalhousie Square, South	ditto
5135	Mukharji, Santanu Kumar	Demonstrator, Presidency College	86-1, College Street	ditto
5136	Mukharji, Santos Kumar, I	Superintendent, Calcutta Improvement Trust	5, Clive Street	ditto
5137	Mukharji, Santos Kumar, II	Clerk, Calcutta Improvement Trust	5, Clive Street	ditto
5138	Mukharji, Santos Kumar, I	Assistant, Central Stationery Office	3, Church Lane	ditto

5139	Mukharji, Santos Kumar	Assistant, Accounts Department, Calcutta Corporation	Municipal Office	ditto
5140	Mukharji, Sarbani	Clerk, D A G P & T Office	7, Kaylaghat Street	ditto
5141	Mukharji, Satinath, BA	S A S Clerk, Army Factory Accounts	6, Esplanade, East	ditto
5142	Mukharji, Satindra Nath, I	Assistant, Accounts Department, Calcutta Corporation	Municipal Office	ditto
5143	Mukharji, Satindra Nath	Draftsman, No I Drawing Office, Survey of India	13, Wood Street	ditto
5144	Mukharji, Satish Chandra	Clerk, Gillanders Arbuthnot & Co	8, Clive Street	ditto
5145	Mukharji, Satish Chandra	Record-Keeper, Bengal Telephone Corporation, Ld	8, Hare Street	ditto
5146	Mukharji, Satish Chandra	Stenographer, Imperial Chemical Industries (India), Ld	18, Strand Road	ditto
5147	Mukharji, Satkari	Assistant, Lovelock & Lewes	4, Lyons Range	ditto
5148	Mukharji, Satya Charan	Clerk, Burmah Shell Co of India, Ld	Hongkong House	ditto
5149	Mukharji, Satya Charan, B Sc	Demonstrator, Ripon College	24, Harrison Road	ditto
5150	Mukharji, Satya Charan	Assistant, Office of the Inspector-General of Registration	Writers' Buildings	ditto
5151	Mukharji, Satyaranjan	Engineer, Krupp Indian Trading Co, Ld	22, Canning Street	ditto
5152	Mukharji, Satya Hari	Assistant, Accountant-General's Office, Bengal	Treasury Buildings	ditto
5153	Mukharji, Satya Prosanna, BSc	Assistant, Accountant-General's Office, Bengal	Treasury Buildings	ditto

No.	Names.	Style or calling.	Residence or place of business.	Religion.
5154	Mukharji, Satyendra Kumar	Assistant, Ford, Rhodes, Thornton & Co	Tower House, Chowringhee Square	Hindu
5155	Mukharji, Satyendra Nath, MA, BT	Assistant Master, Hindu School	College Square	ditto
5156	Mukharji, Satyendra Nath	Clerk, Burmah Shell Co of India, Ld	Hongkong House	ditto
5157	Mukharji, S B	Assistant, Barry & Co	2, Fairlie Place	ditto
5158	Mukharji, S B	Clerk, Sun Life Assurance Co of Canada	12, Dalhousie Square, East	ditto
5159	Mukharji, S C	Assistant, Bullion Keeper, Calcutta Mint	47, Strand Road	ditto
5160	Mukharji, Shachindra Nath	Examiner of Stores, Indian Stores Deptt	6, Esplanade, East	ditto
5161	Mukharji, Shaila Ch	Clerk, D A G, P & T Office	7, Koilaghat Street	ditto
5162	Mukharji, Shailajananda	Assistant Inspector of Messes, Calcutta University	Senate House	ditto
5163	Mukharji, Shailendra K	Surveyor, Calcutta Improvement Trust	5, Clive Street	ditto
5164	Mukharji, Shailendra Nath	Assistant, Calcutta University	Senate House	ditto
5165	Mukharji, Sharat Chandra	Clerk, Marine Department, South British Insurance Co, Ld	5, Clive Street	ditto
5166	Mukharji, Sharat Chandra	Assistant, Bengal Secretariat, P W D	Writers' Buildings	ditto

5167	Mukharji, Sharat Shashi	Assistant, McLeod & Co	28, Dalhousie Square	ditto
5168	Mukharji, Shashadhar	Auditor, George Read & Co	Avenue House, Chowringhee Square	ditto
5169	Mukharji, Shashanka Shekhar	Head Clerk, Sales. Imperial Tobacco Co of India, Ld	37, Chowringhee	ditto
5170	Mukharji, Shiddeshwar, M sc (1)	Clerk, D A G, P & T Office	7, Koilaghat Street	ditto
5171	Mukharji, Shiddeshwar	Assistant, Board of Revenue, Bengal	Writers' Buildings	ditto
5172	Mukharji, Shivadas	Assistant, Accountant-General's Office, Bengal	Treasury Buildings	ditto
5173	Mukharji, Shiva Narayan	Stenographer, Traffic Department, E B R	3, Koylaghat Street	ditto
5174	Mukharji, Shivapada	Assistant, Accountant-General's Office, Bengal	Treasury Buildings	ditto
5175	Mukharji, Shiva Prasad	Assistant, Mackinnon, Mackenzie & Co	16, Strand Road	ditto
5176	Mukharji, Shivaram	Assistant, Accountant-General's Office, Bengal	Treasury Buildings	ditto
5177	Mukharji, Shivaram	Clerk, Lighting Department, Calcutta Corporation	Municipal Office	ditto
5178	Mukharji, Shrish Chandra	Accounts Clerk, E B R	3, Koilaghat Street	ditto
5179	Mukharji, Shyama Charan	Estimator, Office of Superintending Engineer, S W Circle	Treasury Buildings	ditto
5180	Mukharji, Shyamadas, M sc	Clerk, D A G, P & T Office	7, Koilaghat Street	ditto

No.	Names.	Style or calling.	Residence or place of business.	Religion.
5181	Mukharji, Shyamapada ..	In charge, Plate-keeping Section, Photo-Litho Office, Survey of India	14, Wood Street ..	Hindu
5182	Mukharji, Shyamlal, BSc ..	Professor, Vidyasagar College ..	39, Sankar Ghose Lane ..	ditto
5183	Mukharji, Siddheshwar ..	Clerk, Central Stationery Office ..	3, Church Lane ..	ditto
5184	Mukharji, Sitapati ..	Engineering Assistant, Jewell Export Filter Co, Inc ..	10, Clive Street ..	ditto
5185	Mukharji, Sourendra Mohan ..	Clerk, Telegraph Check Office ..	33, Dalhousie Square, South ..	ditto
5186	Mukharji, S P ..	Secretary, Shree Radha Krishna Sugar Mills, Ld ..	138, Harrison Road ..	ditto
5187	Mukharji, Sripati ..	Clerk, D A G, P & T Office ..	7, Koilaghat Street ..	ditto
5188	Mukharji, Sudhanshu Kumar ..	Clerk, Burmah Shell Co of India, Ld ..	Hongkong House ..	ditto
5189	Mukharji, Sudhin Chandra ..	Clerk, Burmah Shell Co of India, Ld ..	Hongkong House ..	ditto
5190	Mukharji, Sudhir Chandra ..	Clerk, Mathematical Instrument Office ..	15, Wood Street ..	ditto
5191	Mukharji, Sudin Prakash ..	Head Clerk, Norwich Union Fire Insurance Society, Ld ..	8, Old Court House Street ..	ditto
5192	Mukharji, Sukumar, M A ..	Lecturer, Vidyasagar College ..	39, Shankar Ghose Lane ..	ditto
5193	Mukharji, Sunil Bhusan ..	Subhead, Accounts Office, E B R ..	3, Koilaghat Street ..	ditto
5194	Mukharji, Surendra Nath ..	Clerk, Calcutta Improvement Trust ..	5, Clive Street ..	ditto

5195	Mukharji, Surendra Nath	Clerk, D A G, P & T Office	7, Koilaghat Street	ditto
5196	Mukharji, Surendra Nath	Assistant, Explosives Office	1, Council House Street	ditto
5197	Mukharji, Surendra Nath	Accounts Clerk, E B R	3, Koilaghat Street	ditto
5198	Mukharji, Surendra Nath	Clerk, Turner Morrison & Co, Ld	6, Lyons Range	ditto
5199	Mukharji, Suresh Chandra	Clerk, C A O's Office, E I R	E I R House	ditto
5200	Mukharji, Suresh Chandra	Clerk, Mechanical Dept, E B R	3, Koilaghat Street	ditto
5201	Mukharji, Suresh Chandra, BL	Accounts Clerk, E B R	3, Koylaghat Street	ditto
5202	Mukharji, Suresh Chandra	Reader, Govt of India Press	8, Hastings Street	ditto
5203	Mukharji, Sushen Chandra	Assistant, Office of the Controller of Currency	Treasury Buildings	ditto
5204	Mukharji, Sushil Chandra	Head Assistant, Surgeon-General's Office, Bengal	Writers' Buildings	ditto
5205	Mukharji, Sushil Kumar	Assistant, Reserve Bank of India	8, Council House Street	ditto
5206	Mukharji, Tara Kumar	Clerk, D A G, P & T Office	7, Koilaghat Street	ditto
5207	Mukharji, Tarak Nath, BA	Assessing Inspector, Calcutta Corporation	Municipal Office	ditto
5208	Mukharji, Tarapada	Clerk, C O P S Office, E I R	E I R House	ditto
5209	Mukharji, Tarapada	Clerk, C A O's Office, E I R	E I R House	ditto
5210	Mukharji, Tinkari	Assistant, McLeod & Co	28, Dalhousie Square	ditto
5211	Mukharji, Tinkari, BA	Head Clerk, Stewart & Co	8, Clive Street	ditto
5212	Mukharji, T K	Assistant Cashier, Remington Rand Inc	3, Council House Street	ditto
5213	Mukharji, Tulsi Charan	Assistant, Botanical Survey of India	Indian Museum	ditto

No.	Names.	Style or calling.	Residence or place of business.	Religion.
5214	Mukharji, Tustapada	Accounts Clerk, E B R	3, Koylaghat Street	Hindu
5215	Mukharji, Upendra Chandra	Head Record Clerk, Secretary's Department, Port Commissioners' Office	Strand Road	ditto
5216	Mukharji, Upendra Nath	Assistant, McLeod & Co	28, Dalhousie Square	ditto
5217	Mukharji, Upendra Nath	Levelling Surveyor, Special Officer's Dept, Calcutta Corporation	Municipal Office	ditto
5218	Munshi, Ananta Kumar, BA	Assistant, Accounts Department, Calcutta Corporation	Municipal Office	ditto
5219	Murti, P N	Assistant Electrical Engineer, E I R	E I R House	ditto
5220	Mustafi, Haridas, BA	Assistant, Accountant-General's Office, Bengal	Treasury Buildings	ditto
5221	Mustafi, Manindra Nath	Assistant, Office of the Director of Public Health, Bengal	Writers' Buildings	ditto
5222	Mustafi, Sukumar	Assistant, McLeod & Co	28, Dalhousie Square	ditto
5223	Mustafi, Surendra Nath, BA	Assistant, Accountant-General's Office, Bengal	Treasury Buildings	ditto
	N			
5224	Nabi, Shaikh Ghulam	In-charge, Powder Process Section, Photo-Litho Office, Survey of India	14, Wood Street	Mahomedan
5225	Nag, A K	Assistant, Guest, Keen, Williams, Ld	7, Council House Street	Hindu
5226	Nag, A N	Broker, H J Foster & Co, Ld	Sassoon House	ditto
5227	Nag, Bhupati Mohan	Food Inspector, Calcutta Corporation	22, Mirzapore Street	ditto
5228	Nag, Girija Bhusan	Head Clerk, Supply, Imperial Tobacco Co of India, Ld	37, Chowringhee	ditto
5229	Nag, Gokul Chandra	Assistant, A-G's Office, Bengal	Treasury Buildings	ditto
5230	Nag, Hem Chandra	Clerk, Norwich Union Fire Insurance Society, Ld	8, Old Court House Street	ditto

5231	Nag, Kshitindra Kumar ..	Assistant, Jeewanlal (1929), Ld	101, Clive Strreet	ditto
5232	Nag, Nagendra Chandra ..	Sub-Assistant Superintendent, No. I Drawing Office, Survey of India	13, Wood Street	ditto
5233	Nag, Nirmal, BA	Clerk, C E's Office, Calcutta Corporation	Municipal Office	ditto
5234	Nag, Nirmal Chandra	Assistant, Accounts Department, Calcutta Corporation	Municipal Office	ditto
5235	Nag, Prafulla Kumar	Food Inspector, Calcutta Corporation	22, Mirzapore Street	ditto
5236	Nag, Pulin Bihari	Clerk, Alliance Assurance Co, Ld	2, Hare Street	ditto
5237	Nag, Satish Chandra	Assistant, Office of the I-G of Police	Writers' Buildings	ditto
5238	Nag, Shailendra Prasad, MSC	Lecturer, Bethune College	181, Cornwallis Street	ditto
5239	Nag Chaudhuri, Saroj Kumar	Stenographer and Junior Council Reporter	Writers' Buildings	ditto
5240	Nagarwala, Noshir Hirji ..	Assistant, Imperial Chemical Industries (India), Ld	18, Strand Road	Zoroastrian
5241	Naha, Upendra Mohan	Clerk, D A G P & T Office	7, Koilaghat Street	Hindu
5242	Naidu, Poorati Govind Rajuloo	Sr Clerk, Office of the Controller of Purchase, Indian Stores Department	6, Esplanade East	ditto
5243	Naik M R	Cashier, Dunlop Rubber Co (India), Ld	42, Free School Street	ditto
5244	Nair, Vedikara Madhavan	Secretary, Walford Transport, Ld	71-73, Park Street	ditto
5245	Nanavati, Valabhdass Kersondas	Head Assistant, Jupiter General Insurance Co, Ld	7, Pollock Street	Jain
5246	Nandi, Advaita Charan	Cashier, T E Thomson & Co, Ld	9, Esplanade, East	Hindu
5247	Nandi, Amulya Kumar	Clerk, D A G P & T Office	7, Koilaghat Street	ditto
5248	Nandi, Anukul Chandra	Stock Verifier, Accounts Department, Calcutta Corporation	Municipal Office	ditto
5249	Nandi, Ashutos	Clerk, Agent's Office, E B R	3, Kaylaghat Street	ditto
5250	Nandi, Baidyanath	Assistant, Commercial Intelligence Department	1, Council House Street	ditto
5251	Nandi, Bishnupada, BA	Assistant, Accountant-General's Office, Bengal	Treasury Buildings	ditto
5252	Nandi, Chandra Nath, BCOM	Clerk, D A G P & T Office	7, Koilaghat Street	ditto

No.	Names.	Style or calling.	Residence or place of business.	Religion.
5253	Nandi, C N	Supervisor, Telegraph Check Office	33, Dalhousie Square, South	Hindu
5254	Nandi, Gora Chand	Assistant, Burn & Co, Ld	12, Mission Row	ditto
5255	Nandi, Jatindra Nath	Assistant, F W Heilgers & Co	1-1, Clive Street	ditto
5256	Nandi, Krishna Gopal	Clerk, D A G P & T Office	7, Koilaghat Street	ditto
5257	Nandi, Manindra Nath	Clerk, Macmillan & Co, Ld	294, Bowbazar Street	ditto
5258	Nandi, Manmatha Nath	Assistant, Brooke Bond (India), Ld	2, Metcalfe Street	ditto
5259	Nandi, M N	Clerk, Liverpool & London & Globe Insurance Co, Ld	26, Dalhousie Square	ditto
5260	Nandi, Prabodh Chandra, BA	Assistant, Office of the Controller of Currency	Treasury Buildings	ditto
5261	Nandi, Purna Chandra	Assistant, A-G's Office, Bengal	Treasury Buildings	ditto
5262	Nandi, Radha Kanta, BA	Clerk, D A G P & T Office	7, Koilaghat Street	ditto
5263	Nandi, R K	Clerk, P. S Office, E I R	E I R House	ditto
5264	Nandi, Sharat Chandra	Clerk, National Bank of India, Ld	104, Clive Street	ditto
5265	Nandi, Shashi Bhusan	Head Clerk, Office of the Executive Engineer, Suburban Division, P W D	Writers' Buildings	ditto
5266	Nandi, Shishir Kumar	Clerk, D A G P & T Office	7, Koilaghat Street	ditto
5267	Nandi, Suryya Kumar	Accountant, Bengal Provincial Co-operative Bank, Ld	Writers' Buildings	ditto
5268	Nandi, Tara Charan	Professor, Bangabasi College	25-1, Scott Lane	ditto
5269	Nanjundia, B	Assistant, Burn & Co, Ld	12, Mission Row	ditto
5270	Narayan, Ganti Yeggen	Clerk, Standard Telephones & Cables, Ld	4, Esplanade East	ditto
5271	Narayan, Jai	Clerk, Agent's Office, E I R	E I R House	ditto
5272	Narayan, Kumarapuram Parameswar	Stenotypist, Martin & Co	12, Mission Row	ditto

5273	Narayan, V V S	Chief Accountant, Remington Rand Inc	3, Council House Street	ditto
5274	Nasir, Mahomed	Clerk, C A O's Office, E I R	E I R House	Mahomedan
5275	Naskar, M L	Book-keeper, Glenfield & Kennedy, Ld	4, Fairlie Place	Hindu
5276	Natarajan, Kothandarama Iyer	Clerk, Grindlay & Co, Ld	6, Church Lane	ditto
5277	Natarajan, Minakshi Sundaram	Assistant, Andrew Yule & Co, Ld	8, Clive Row	ditto
5278	Nath, Jnanendra Chandra	Building Inspector, Calcutta Corporation	Municipal Office	ditto
5279	Nath, Manmatha Nath	Assistant, W Newman & Co, Ld	3, Old Court House Street	ditto
5280	Nath, Narayan Chandra, MA	Assistant, Surveyor-General's Office	13, Wood Street	ditto
5281	Nath, Prasad Chandra	In-charge, Negative Retouching Section, Photo-Litho Office, Survey of India	14, Wood Street	ditto
5282	Niyogi, Amiya Kanta, BSc	Assistant, Bengal Legislative Council	Council House	ditto
5283	Niyogi, B B	Head Clerk, Britannia Biscuit Co, Ld	Stephen House	ditto
5284	Niyogi, Chandra Bhusan	Assistant, Mercantile Marine Department	15-1, Strand Road	ditto
5285	Niyogi, Hiralal, BA	Overseer, District No II, Calcutta Corporation	22, Mirzapore Street	ditto
5286	Niyogi, Jyotish Chandra, B A	Clerk, D A G P & T Office	7, Koilaghat Street	ditto
5287	Niyogi, Kishorilal	Assistant, National Insurance Co, Ld	7, Council House Street	ditto
5288	Niyogi, Nalini Mohan	Assistant, Bengal Secretariat, L S-G Deptt	Writers' Buildings	ditto
5289	Niyogi, Narayan Chandra	Clerk, Turner, Morrison & Co, Ld	6, Lyons Range	ditto
5290	Niyogi, Narendra Nath	Demonstrator, Presidency College	86-1, College Street	ditto
5291	Niyogi, Ramesh Chandra	Assistant, Reserve Bank of India	8, Council House Street	ditto
5292	Niyogi, Ruchirendra	Assistant, Bengal Secretariat, Revenue Department	Writers' Buildings	ditto
5293	Niyogi, Sudhir Chandra, DSC	Professor, City College	102-1, Amherst Street	ditto
5294	Nurullah, Md Abul Ula	Assistant Maulvi, Calcutta Madrasah	19, Wellesley Square	Mahomedan

No.	Name.	Style or calling.	Residence or place of business.	Religion.
	O			
5295	Omar, Zahid	Examiner of Stores, Indian Stores Deptt	6, Esplanade East	Mahomedan
5296	Oonvala, Sorabji Muncharji	Assistant, Bengal Secretariat, Commerce Department	Writers' Buildings	Zoroastrian
	P			
5297	Padhiar, Nrisinha Prasad Kanji	Assistant, Jewanlal (1929), Ld	101, Clive Street	Hindu
5298	Pal, Adwaita Charan	Traveller, Blackie & Son (India), Ld	285-11, Bowbazar Street	ditto
5299	Pal, Anil Shekhar	Assistant Accounts Department, Calcutta Corporation	Municipal Office	ditto
5300	Pal, Anucul Chandra	Assistant, Thacker Spink & Co (1933), Ld	3, Esplanade East	ditto
5301	Pal, Arabinda	Clerk, Jardine, Skinner & Co	4, Clive Row	ditto
5302	Pal, Ashutos	Assistant, Controller's Office, Calcutta University	Senate House	ditto
5303	Pal, Ashutos	Clerk, C O S Office, E I R	E I R House	ditto
5304	Pal, Ashwini Kumar	Estimator, Western Electrical Division, P W D	Writers' Buildings	ditto
5305	Pal, Balailal	Clerk, Shaw, Wallace & Co	4, Bankshall Street	ditto
5306	Pal, Bansidhar, BL	Offg Accountant, A-G's Office, Bengal	Treasury Buildings	ditto
5307	Pal, Bata Krishna	Asstt cashier, National Bank of India, Ld	104, Clive Street	ditto
5308	Pal, Bhupendra Nath	Assistant, Brooke Bond India, Ld	2, Metcalfe Street	ditto
5309	Pal, Bibekananda, MA	Assistant, Central Forms Stores	166, Dharamtala Street	ditto
5310	Pal, Bihari Lal	Assistant, Accounts Department, Calcutta Corporation	Municipal Office	ditto
5311	Pal, Bijaya Krishna	Assistant, Mackinnon, Mackenzie & Co	16, Strand Road	ditto

5312	Pal, Bijaya Krishna	Clerk, *Statesman*, Ld	Statesman House	ditto
5313	Pal, Bijaya Krishna, BA	Clerk, D A G P & T Office	7, Koilaghat Street	ditto
5314	Pal, Binaya Krishna	Clerk, D A G P & T Office	7, Koilaghat Street	ditto
5315	Pal, Debendra Nath	Clerk, Gillanders, Arbuthnot & Co	8, Clive Street	ditto
5316	Pal, Dharma Dass	Assistant, James Finlay & Co, Ld	1, Clive Street	ditto
5317	Pal, Dhirendra Nath	Sub-Head, C A O's Office, E I R	E I R House	ditto
5318	Pal, Dhirendra Nath	Head Clerk, National Bank of India, Ld	104, Clive Street	ditto
5319	Pal, Dulal Krishna, MSC	Assistant, Accountant-General's Office, Bengal	Treasury Buildings	ditto
5320	Pal, Girindra Mohan, BSC, GDA	Examiner of Accounts, Income-tax Office	3, Government Place, West	ditto
5321	Pal, Harendra Chandra, MA, BL	Assistant, Calcutta Insurance, Ld	86, Clive Street	ditto
5322	Pal, Hari Charan	Clerk (Coal Accounts), Port Commissioners' Office	Strand Road	ditto
5323	Pal, Haridas	Sub-Head, Accounts Office, E B R	3, Koilaghat Street	ditto
5324	Pal, Hem Chandra	Clerk, Ralli Brothers, Ld	16, Hare Street	ditto
5325	Pal, Jashoda Nandan	Assistant, Mackinnon, Mackenzie & Co	16, Strand Road	ditto
5326	Pal, Jatindra Mohan	Clerk, D A G P & T Office	7, Koilaghat Street	ditto
5327	Pal, Jitendra Nath	Food Inspector, Calcutta Corporation	79, Cornwallis Street	ditto
5328	Pal, Jitendra Nath	Clerk, Martin & Co	12, Mission Row	ditto

No.	Names.	Style or calling.	Residence or place of business.	Religion
5329	Pal, Jnan Chandra	Clerk, Burmah Shell Co of India, Ld	Hongkong House	Hindu
5330	Pal, Jyotish Chandra	Cash Clerk, Port Commissioners' Office	Strand Road	ditto
5331	Pal, Krishna Lal	Assistant, Accountant-General's Office, Bengal	Treasury Buildings	ditto
5332	Pal, Lalit Mohan	Assistant, Brooke Bond (India), Ld	2, Metcalfe Street	ditto
5333	Pal, L N	Head Draftsman, W W Extention Deptt, Calcutta Corporation	Municipal Office	ditto
5334	Pal, Madan Mohan (No 1)	Clerk, Chartered Bank of India, Australia and China	1-1, Clive Street	ditto
5335	Pal, Makhan Lal, BA	Assistant, Accountant-General's Office, Bengal	Treasury Buildings	ditto
5336	Pal, Nrittya Gopal	Clerk, Burmah Shell Co of India, Ld	Hongkong House	ditto
5337	Pal, Paritos	Assistant, Balmer, Lawrie & Co, Ld	103, Clive Street	ditto
5338	Pal, Phanindra Nath	Assistant, Accountant-General's Office, Bengal	Treasury Buildings	ditto
5339	Pal, Prabodh	Assistant, Macneill & Co	2, Fairlie Place	ditto
5340	Pal, Prakash Chandra	Assistant, Bengal Secretariat, Police Department	Writers' Buildings	ditto
5341	Pal, Prakash Chandra	Estimator, Governor's Estate Division	Government House	ditto
5342	Pal, Provas Chandra	Assistant, Calcutta University	Senate House	ditto
5343	Pal, Pulin Behari	Engineer, Martin & Co	12, Mission Row	ditto
5344	Pal, Rakhal Chandra	Assistant, Education Department, Bengal Secretariat	Writers' Buildings	ditto
5345	Pal, Satish Chandra, BA	Offg Accountant, A-G's Office, Bengal	Treasury Buildings	ditto

5346	Pal, Satish Chandra	Cashier, Mackintosh Burn, Ld	8, Clive Street	ditto
5347	Pal, Satya Gopal	Clerk, D A G P & T Office	7, Koilaghat Street	ditto
5348	Pal, Satya Kumar	Clerk, D A G P & T Office	7, Koilaghat Street	ditto
5349	Pal, Shachindra Mohan, M Sc	Examiner of Accounts, Income-tax Office	3, Government Place, West	ditto
5350	Pal, Shailendra Bhusan	Accountant, Ex-Engineer's Office, City Division, P W D	Writers' Buildings	ditto
5351	Pal, Sharat Chandra	Clerk, Lloyds Bank, Ld	101-1, Clive Street	ditto
5352	Pal, Shricharan	Cashier, Marshall Sons & Co (India), Ld	99, Clive Street	ditto
5353	Pal, Shyam Chand	Clerk, Estate Superintendent's Office, Port Commissioners	Strand Road	ditto
5354	Pal, Subodh Chandra	Assistant, Reserve Bank of India	8, Council House Street	ditto
5355	Pal, Sudhish Chandra	Assistant, Brooke Bond (India), Ld	2, Metcalfe Street	ditto
5356	Pal, Suprokash	Assistant, Central Stationery Office	3, Church Lane	ditto
5357	Palit, Ashutos	Clerk, Place, Siddons & Gough	6, Lyons Range	ditto
5358	Palit, Haridas	R D Inspector, E B R	3, Kaylaghat Street	ditto
5359	Palit, Kalipada	Clerk, D A G P & T Office	7, Koilaghat Street	ditto
5360	Palit, Satish Chandra	Clerk, C O P S Office, E I R	E I R House	ditto
5361	Palit, Shachindra Mohan	Assistant, Commercial Intelligence Deptt	1, Council House Street	ditto
5362	Palit, S K, MA	Superintendent, C D Deptt, Central Bank of India, Ld	100, Clive Street	ditto
5363	Panda, M L M	Assistant, Mackinnon, Mackenzie & Co	16, Strand Road	Christian

No.	Names.	Style or calling.	Residence or place of business.	Religion.
5364	Pande, Bal Dutt	Clerk, Allahabad Bank, Ld	6, Royal Exchange Place	Hindu
5365	Pandit, Jogendra Nath	Clerk, Burmah Shell Co of India, Ld	Hongkong House	ditto
5366	Pandit, Nirmal Kumar	Accountant, Pacific Minerals, Ld	100, Clive Street	ditto
5367	Parakh, D J	Assistant, Imperial Chemical Industries (India), Ld	18, Strand Road	Zoroastrian
5368	Parekh, A P, B A	Assistant, S R Batliboi & Co	1-B, Old Post Office Street	ditto
5369	Pasricha, L S	Manager, Prominent Sports, Ld	19C, Chowringhee	Hindu
5370	Pasricha, Tek Chand	Assistant Superintendent, C O S Office, E I R	E I R House	ditto
5371	Pastakia, Burjor Hormusji, BA	Assistant, Tata Iron & Steel Co, Ld	100, Clive Street	Zoroastrian
5372	Patel, G B	Assistant, National Insurance Co, Ld	7, Council House Street	Hindu
5373	Patel, Pranjibandas	Assistant, National Insurance Co, Ld	7, Council House Street	ditto
5374	Pathak, Abinash Chandra	Clerk, Turner, Morrison & Co, Ld	6, Lyons Range	ditto
5375	Pathak, Amiya Kumar	Chief Clerk, Lloyds Bank, Ld	37, Chowringhee	ditto
5376	Pathak, Dolatram Jhinaram	Assistant, Jewanlal (1929), Ld	101, Clive Street	ditto
5377	Pathak, Jatindra Nath	Clerk, Telegraph Check Office	33, Dalhousie Square, South	ditto
5378	Pathak, Lokendra Nath, MA	Assistant, Calcutta University	Senate House	ditto
5379	Pathak, Nanilal	Assistant, Bengal Secretariat, L S-G Department	Writers' Buildings	ditto
5380	Pathak, Prashanta Kumar	Head Stenographer, Accounts Department, Port Commissioners' Office	Strand Road	ditto

5381	Pathak, Ramendra Nath	Stenographer, Imperial Chemical Industries (India), Ld	18, Strand Road	ditto
5382	Patla, Sarveshwar	Estimator, Executive Engineer's Office, Canal Division	Treasury Buildings	ditto
5383	Pathak, Shailendra Nath	Assistant, Calcutta University	Senate House	ditto
5384	Pathak, Shaktisudha, BA	Assistant, Commercial Intelligence Department	1, Council House Street	ditto
5385	Patra, Narayan Chandra	Assistant Printer, *Statesman*, Ld	Statesman House	ditto
5386	Pattabhiraman, R	S A I, C R E's Office	Fort William	ditto
5387	Piplai, Shivaprasad	Clerk, Agency Office, E I R	E I R House	ditto
5388	Poddar, Baroda Charan, BA	Clerk, D A G P & T Office	7, Koilaghat Street	ditto
5389	Pramanik, Abdul Gaffur, BA	Clerk, D A G P & T Office	7, Koilaghat Street	Mahomedan.
5390	Pramanik, Atulya Kumar	Assistant, Calcutta Improvement Trust	5, Clive Street	Hindu
5391	Pramanik, Bijaya Kristo	Clerk, Telegraph Check Office	33, Dalhousie Square, South	ditto
5392	Pramanik, Dwijendra Nath	Clerk, Landale & Clark, Ld	11, Clive Street	ditto
5393	Pramanik, Ganesh Ch	Clerk, Telegraph Check Office	33, Dalhousie Square, South	ditto
5394	Pramanik, Hem Chandra	Assistant, Agriculture and Industries Department, Bengal	Writers' Buildings	ditto
5395	Pramanik, Jiban Krishna	Assistant, Accountant-General's Office, Bengal	Treasury Buildings	ditto
5396	Pramanick, Khetra Mohan	Clerk, DA G P & T Office	7, Koilaghat Street	ditto
5397	Pramanik, Kshirode Kumar	Assistant, Office of the Inspector-General of Prisons, Bengal	Writers' Buildings	ditto
5398	Pramanik, Tulsi Charan	Assistant, A-G's Office, Bengal	Treasury Buildings	ditto

No.	Names	Style or calling.	Residence or place of business.	Religion.
5399	Prasad, Bhagwati	Clerk, C O P S Office, E I R	E I R House	Hindu
5400	Prasad, Gopal, BSC	Demonstrator, Scottish Church College	4, Cornwallis Street	ditto
5401	Pyne, B N	Chief Clerk, Indian and Eastern Engineering Co, Ld	5, Mission Row	ditto
5402	Pyne, Kitai Chand	Clerk, David Sassoon & Co	4, Lyons Range	ditto
5403	Pyne, Srikrishna	Chief Clerk, William Jacks & Co	10, Clive Street	ditto

Q

5404	Quadari, Khaled Abui Ahmed	News Editor, "Star of India"	3, Wellesley Place	Mahomedan
5405	Quadari, Manzura (Maulvi)	Assistant, Legislative Department, Bengal	Council House	ditto
5406	Quader, Abdul	Assistant, Office of the Director of Public Instruction, Bengal	Writers' Buildings	ditto
5407	Quader, Shaikh Abdul (Maulvi), BA	Assistant, Bengal Secretariat, Police Department	Writers' Buildings	ditto
5408	Quaraishi, Mahomed Serajul Huq (Maulvi), BL	Assistant, Bengali Translator's Office	Writers' Buildings	ditto

R

5409	Rafiq, Mahomed	Assistant, Office of the Geological Survey of India	27, Chowringhee	Mahomedan
5410	Rafiqur, Rahman	Assistant, Calcutta University	Senate House	ditto
5411	Raghavan, Parambath Kuppa	Chief Clerk, Standard Telephones & Cables, Ld	4, Esplanade, East	Hindu
5412	Raha, Amal Kumar, BA	License Inspector, Calcutta Corporation	Municipal Office	ditto
5413	Raha, Bejoy Kumar, BA	Assistant, National Insurance Co, Ld	7, Council House Street	ditto
5414	Raha, R O, MA	Inspector of Messes, Calcutta University	Senate House	Christian

5415	Rahim, Abdur	Assistant Maulvi, Imperial Record Department	3, Government Place, West	Mahomedan
5416	Rahim, Kholilar	Reviser, Government of India Press	8, Hastings Street	ditto
5417	Rahim, Mahomed Zohadur (Maulvi), BA	Assistant, Bengal Secretariat, Finance Department	Writers' Buildings	ditto
5418	Rahim, Syed Mahbubur, BA, BT	Head Master, Woodburn M E School	24, Mussalmanpara Lane	ditto
5419	Rahman, A K O	Clerk, Telegraph Check Office	33, Dalhousie Square, South	ditto
5420	Rahman, Atwar	Assistant, A-G's Office, Bengal	Treasury Buildings	ditto
5421	Rahman, Bazlar, BA	Assistant, A G's Office, Bengal	Treasury Buildings	ditto
5422	Rahman, Syed Bazlur	Assistant, Commercial Intelligence Dept	1, Council House Street	ditto
5423	Rahman, Eqbalur, MSC, GDA	Examiner of Accounts, I T Office	6, Esplanade, East	ditto
5424	Rahman, Fazlar	Inspector, Collector's Department, Calcutta Corporation	Municipal Office	ditto
5425	Rahman, Fazlar	Inspector, License Department, Calcutta Corporation	Municipal Office	ditto
5426	Rahman, Habibur	Assistant, Commercial Intelligence Department	1, Council House Street	ditto
5427	Rahman, K F, BCom	Examiner of Accounts, I T Office	6, Esplanade East	ditto
5428	Rahman, Khalilur, BSC, BT	Assistant Master, Calcutta Madrassah	19, Wellesley Square	ditto
5429	Rahman, Khalilur. BA	Assessing Inspector, Calcutta Corporation	Municipal Office	ditto
5430	Rahman, Khalilur	Assessor, Income-tax Office	3, Government Place, West	ditto
5431	Rahman, Lutfar (Maulvi)	Municipal Assistant, Presidency Commissioner's Office	3, Charnock Place	ditto

No.	Names.	Style or calling.	Residence or place of business.	Religion.
5432	Rahman, Mabibur	Clerk, D A G P & T Office	7, Koilaghat Street	Mahomedan
5433	Rahman, Mahammad Abdur	Assistant, Bengal Secretariat, Education Department	Writers' Buildings	ditto
5434	Rahman, Md. Wazihur (Maulvi), BA	Assistant, Bengal Secretariat, Appointment Department	Writers' Buildings	ditto
5435	Rahman, Matiur, MCOM	Examiner of Accounts, Income Tax Office	3, Government Place, West	ditto
5436	Rahman, Mir Azizur, BA	Assistant, K C Thaper & Bros, Ld	5, Royal Exchange Place	ditto
5437	Rahman, Obaidur	Assistant, Andrew Yule & Co, Ld	8, Clive Row	ditto
5438	Rahman, Shafiur	Assistant, Office of the I-G of Registration, Bengal	Writers' Buildings	ditto
5439	Rajagopal, T B, MA	Office Superintendent, General Branch, Agent's Office, E B R	3, Koilaghat Street	Hindu
5440	Rajagopalan, C	Clerk, Price Waterhouse Peat & Co	B-4, Clive Buildings	ditto
5441	Rajagopalan, Visnanipet Narain	Clerk, C A's Office, E I R	E I R House	ditto
5442	Rajan, P	Clerk, Dunlop Rubber Co (India), Ld	42, Free School Street	ditto
5443	Rakshit, Amarendra Nath	Engineer, Bhattacharjee & Co	28, Pollock Street	ditto
5444	Rakshit, Debendra Lal	Clerk, Booking Section, Port Commissioners' Office	Strand Road	ditto
5445	Rakshit, Gopal Chandra	Stenographer, Imperial Chemical Industries (India), Ld	18, Strand Road	ditto
5446	Rakshit, Gour Chandra	Clerk, Gillanders, Arbuthnot & Co	8, Clive Street	ditto
5447	Rakshit, Hridaya Ranjan	Clerk, Agency Office, E I R	E I R House	ditto
5448	Rakshit, Kalikrishna, BT	Assistant Master, Hindu School	College Square	ditto
5449	Rakshit, Upendra Nath	Assistant, North British & Mercantile Insurance Co, Ld	101-1, Clive Street	ditto

5450	Ramachar, Brahmanda Krishna	Salesman, Roneo, Ld	32-1, Dalhousie Square	ditto
5451	Ramaiah, P M	Assistant, F W Heilgers & Co	1-1, Clive Street	ditto
5452	Raman, A V, MA	Assistant, Office of the Controller of Currency	Treasury Buildings	ditto
5453	Raman, Ganapathi Venkata	Assistant, Blackwood Bryson & Co, Ld	2, Mangoe Lane	ditto
5454	Raman, V R Sundra, BA	Inspector, Traffic Department, E B R	3, Kaylaghat Street	ditto
5455	Ramaswami, Madura Subramania	Clerk, Gillanders, Arbuthnot & Co	8, Clive Street	ditto
5456	Ramaswami, V	Assistant, Remington Rand Inc	3, Council House Street	ditto
5457	Ramaswamia, Venkatasubhiah	Head Clerk, Bengal United Service Club	29, Chowringhee	ditto
5458	Ramchandran, T S	Assistant, Oriental Government Security Life Assurance Co, Ld	2, Clive Row	ditto
5459	Ramdurai, Venkatisaiyar	Assistant, Andrew, Yule & Co, Ld	8, Clive Row	ditto
5460	Ramiah, Pathai Venkata Narayana Iyer	Accountant, United Steel Companies (India), Ld	2, Avenue House, Chowringhee Square	ditto
5461	Rangachari, A	Clerk, Dunlop Rubber Co (India), Ld	42, Free School Street	ditto
5462	Ranganatham, T G Ayyar	Stenographer, Burmah Shell Co of India, Ld	Hongkong House	ditto
5463	Rangaswami, S N, BA	Clerk, Lloyds Bank, Ld	101-1, Clive Street	ditto
5464	Rao, Alse Venkateshwara	Clerk, Northern Assurance Co, Ld	7, Hare Street	ditto
5465	Rao, Chickaballapur Lakshmana	Assistant, Ludlow Jute Co, Ld	7, Royal Exchange Place	ditto
5466	Rao, Gurvadi Umashanker	Clerk, Burmah Shell Co of India, Ld	Hongkong House	ditto
5467	Rao, Halladij Vithal	Clerk, Burmah Shell Co of India Ld	Hongkong House	ditto
5468	Rao, Krishnasamy Venkoba	Stenographer, C E's Office, E I R	E I R House	ditto
5469	Rao, Mundkur Shrikar	Assistant, Burmah Shell Co of India, Ld	Hongkong House	ditto

No.	Names.	Style or calling.	Residence or place of business.	Religion.
5470	Rao, N Srinivasa	Foreman, Testing Department, C E S C, Ld	Victoria House	Hindu
5471	Rao, Rama Seshagiri	Stenographer, Office of H M's Senior Trade Commissioner in India	4, Fairlie Place	ditto
5472	Rao, Tirukalikunram Devalgar Nagoji	Assistant, Andrew, Yule & Co, Ld	8, Clive Row	ditto
5473	Rashid, Abdur (Maulvi)	Assistant, Bengal Secretariat, L S-G Department	Writers' Buildings	Mahomedan
5474	Rashid, Abdur (Maulvi)	Clerk, Office of the Inspector of Schools, Presidency Division	40-1A, Free School Street	ditto
5475	Rasul, Shaik Hamid, BA	Assistant, Bengal Secretariat, Revenue Department	Writers' Buildings	ditto
5476	Ray, Abanimohan, MA	Lecturer, City College	102-1, Amherst Street	Hindu
5477	Ray, Abanimohan	Accountant, Dredger Division	Charnock Place	ditto
5478	Ray, Abaniranjan, BSC	Assistant, Bengal Secretariat, P W D	Writers' Buildings	ditto
5479	Ray, A. K	Export Clerk, B I S N Co, Ld	8, Strand Road	ditto
5480	Ray, Amarendra Nath, MSC	Head Assistant (Lapse), Unique Assurance Co, Ld	10, Canning Street	ditto
5481	Ray, Amulya Charan	Sub-Head, Accounts Office, E B R	3, Koilaghat Street	ditto
5482	Ray, Amulya Ratan, BL	Assistant Superintendent, Unique Assurance Co, Ld	10, Canning Street	ditto
5483	Ray, Amulya Ratan	2nd Personal Clerk to 1st Deputy Executive Officer, Calcutta Corporation	Municipal Office	ditto
5484	Ray, Ananta Krishna	Draftsman, No. I Drawing Office, Survey of India	13, Wood Street	ditto
5485	Ray, Ananta Kumar	Assistant, Planters' Stores and Agency Co, Ld	11, Clive Street	ditto
5486	Ray, Anil Chandra, No I	Assistant, Accountant-General's Office, Bengal	Treasury Buildings	ditto

5487	Ray, Anil Chandra, MSc, No. II	Accountant, Accountant-General's Office, Bengal	Treasury Buildings	ditto
5488	Ray, Anil Kumar	Clerk, Agency, E I R	E I R House	ditto
5489	Ray, Annada Charan, BL	Inspector, License Department, Calcutta Corporation	Municipal Office	ditto
5490	Ray, Atul Krishna	Clerk, D A G P & T Office	7, Koilaghat Street	ditto
5491	Ray, Bankim Chandra, LT	Assistant Master, Hindu School	College Square	ditto
5492	Ray, Bankim Chandra	Assistant, Calcutta University	Senate House	ditto
5493	Ray, Benode Kumar	Sanitary Officer, Calcutta Corporation, District No III	Hogg Street	ditto
5494	Ray, B B	Audit Inspector, Port Commissioners' Office	Strand Road	ditto
5495	Ray, Bhabani Shankar	Inspector, Imperial Chemical Industries (India), Ld	18, Strand Road	ditto
5496	Ray, Bhabataran, BSc	Assistant, Bengal Secretariat, Political Department	Writers' Buildings	ditto
5497	Ray, Bhagwat	Clerk, C A O's Office, E I R	E I R House	ditto
5498	Ray, Bhuban Mohan	Accountant, Bengal United Service Club	29, Chowringhee	ditto
5499	Ray, Bhudeb Chandra	Assistant, Martin & Co	12, Mission Row	ditto
5500	Ray, Bhujendra Krishna	Clerk, C A O's Office, E I R	E I R House	ditto
5501	Ray, Bhupatinath, BA	Clerk, D A G P & T Office	7, Koilaghat Street	ditto
5502	Ray, Bhupendra Bhusan	Clerk, C O P S Office, E I R	E I R House	ditto
5503	Ray, Bhusan Chandra	Head Clerk, Office of the Superintendent, Governor's Estate, Bengal	9, Government Place, North	ditto
5504	Ray, Bhusan Chandra	Reader, Government of India Press	8, Hastings Street	ditto
5505	Ray, Bibhuti Bhusan	Clerk, D A G P & T Office	7, Koilaghat Street	ditto
5506	Ray, Bilas Chandra	Head Clerk, Land Acquisition Office	5, Bankshall Street	ditto

No.	Names.	Style or calling	Residence or place of business.	Religion.
5507	Ray, Binaya Bhusan ..	.. Head Estimator, Office of the Superintending Engineer, S-W Circle, P W D	Treasury Buildings	Hindu
5508	Ray, Binaya Bhusan ..	.. Clerk, Mathematical Instrument Office, Survey of India ..	15, Wood Street	ditto
5509	Ray, B K ..	.. Asstt, Engineer, G E C (India), Ld	Magnet House, Central Avenue, South	ditto
5510	Ray, Binaya Kumar, MA, BL	.. Clerk, D A G P & T Office	7, Koilaghat Street	ditto
5511	Ray, Bipin Bihari, MA ..	.. Inspector, Collection Department, Calcutta Corporation ..	Municipal Office	ditto
5512	Ray, Biraja Kanta ..	.. Assistant, Accounts Department, Calcutta Corporation ..	Municipal office	ditto
5513	Ray, Biraj Kumar, BA ..	. Sub-Head, C A O's Office, E I R	E I R House	ditto
5514	Ray, Birendra Narayan ..	.. Cashier, Bengal Chemical and Pharmaceutical Works, Ld ..	31, Chittaranjan Avenue, South ..	ditto
5515	Ray, Bisheshwar ..	.. Clerk, D A G P & T Office	7, Koilaghat Street	ditto
5516	Ray, D C, BA ..	.. Supervisor, Central Bank of India, Ld	71, Cross Street	ditto
5517	Ray, Debendra Nath ..	.. Clerk, Traffic Department, E B R	3, Kaylaghat Street	ditto
5518	Ray, Deva Kumar ..	.. Sr Assistant, Explosives Office	1, Council House Street	ditto
5519	Ray, Dhirendra Chandra, MSC	.. Professor, Vidyasagar College	39, Shankar Ghose Lane	ditto
5520	Ray, Dhirendranath, BSC	.. Cashier, Lloyds Bank, Ld	37, Chowringhee	ditto
5521	Ray, Dhirendra Nath ..	.. Despatcher, Calcutta Improvement Trust	3, Clive Street	ditto
5522	Ray, Dhirendranath	.. Estimator, Ex Engineer's Office, City Division, P W D ..	Writers' Buildings	ditto
5523	Ray, Dhirendra Nath ..	.. Clerk, Cox & Kings (Agents), Ld	5, Bankshall Street	ditto
5524	Ray, Dhirendra Nath ..	.. Head Assistant, The Hindu Mutual Life Assurance, Ld ..	309, Bowbazar Street	ditto

5525	Ray, Dwijendranath, BA	Clerk, D A G P & T Office	7, Koilaghat Street	ditto
5526	Ray, Ganesh Chandra	Stenographer, Imperial Chemical Industries (India), Ld	18, Strand Road	ditto
5527	Ray, Girija Prasad	Accountant, Valvoline Oil Co	B-5, Clive Buildings	ditto
5528	Ray, Gour Gopal, BA, BT	Assistant Master, Hare School	87, College Street	ditto
5529	Ray, Haridas	Accountant, Sun Life of Canada	12, Dalhousie Square, East	ditto
5530	Ray, Haridas	Establishment Clerk, C M O's Office, E I R	E I R House	ditto
5531	Ray, Hemchandra	Assistant Accountant, Engineer's Office, District No. III, Calcutta Corporation	Hogg Street	ditto
5532	Ray, Himangshu Bhusan	Clerk, C E E's Office, E I R	E I R House	ditto
5533	Ray, Ishan Chandra, MA	Teacher, City School	13, Mirzapur Street	Brahmo
5534	Ray, Jagannathdeb, BA	Assistant, Controller's Office, Calcutta University	Senate House	Hindu
5535	Ray, Jashendra Nath	Assistant, Commercial Intelligence Department, India	1, Council House Street	ditto
5536	Ray, Jatindra Mohan, BA	S A S Clerk, Army Factory Accounts	6, Esplanade, East	ditto
5537	Ray, Jatindra Nath	Clerk, C C M's Office, E I R	E I R House	ditto
5538	Ray, Jatindranath	Clerk, Telegraph Check Office	33, Dalhousie Square, South	ditto
5539	Ray, Jatindra Nath	Hd Clerk, Imperial Bank of India	3, Strand Road	ditto
5540	Ray, Jitendra Nath	Assistant, Reserve Bank of India	8, Council House Street	ditto
5541	Ray, Jitendra Nath, BA	S A S Clerk, Army Factory Accounts	6, Esplanade, East	ditto
5542	Ray, Jitendra Nath	Head Clerk, Bengal Chamber of Commerce	2, Clive Street	ditto
5543	Ray, Jnanendra Nath	Assistant, Accounts Department, Calcutta Corporation	Municipal Office	ditto
5544	Ray, Jnanendra Nath	Clerk, D A G P & T Office	7, Koilaghat Street	ditto
5545	Ray, Jnanendra N	Assistant Cashier, Octavius Steel & Co, Ld	14, Old Court House Street	ditto

No.	Names.	Style or calling.	Residence or place of business.	Religion.
5546	Ray, Jnan Ranjan, BA	Clerk, D A G P & T Office	7, Koilaghat Street	Hindu
5547	Ray, Jogendra Nath	Clerk, D A G P & T Office	7, Koilaghat Street	ditto
5548	Ray, Jogesh Chandra	Assistant, Mercantile Marine Department	15-1, Strand Road	ditto
5549	Ray, J P	Assistant, Jessop & Co, Ld	93, Clive Street	ditto
5550	Ray Kali Prasanna	Assistant, Office of the Director of Public Health, Bengal	Writers' Buildings	ditto
5551	Ray, Keshab Chandra	Assistant, Accountant-General's Office, Bengal	Treasury Buildings	ditto
5552	Ray, Khagendra Nath	Clerk, Imperial Bank of India	3, Strand Road	ditto
5553	Ray, Krishna Chandra	Ledger-keeper, Williamson Magor & Co	4, Mangoe Lane	ditto
5554	Ray, Krishna Kanta, BA	Clerk, D A G P & T Office	7, Koilaghat Street	ditto
5555	Ray, Kshetra Nath	Section Superintendent, Engineer's Office, E B R	3, Kaylaghat Street	ditto
5556	Ray, Kshitish Chandra, I, BL	Assistant, Accountant-General's Office, Bengal	Treasury Buildings	ditto
5557	Ray, Kshitish Chandra, II, MA	Assistant, Accountant-General's Office, Bengal	Treasury Buildings	ditto
5558	Ray, Lalitmohan	Clerk, D A G P & T Office	7, Koilaghat Street	ditto
5559	Ray, Lalit Mohan, BA	Assistant, Accounts Department, Calcutta Corporation	Municipal Office	ditto
5560	Ray, Lalit Mohan, B COM	Accounts Clerk, Executive Engineer's Office, Western Electrical Division	Writers' Buildings	ditto
5561	Ray, Mana Mohan, MSC	Offg. Accountant, Accountant-General's Office, Bengal	Treasury Buildings	ditto
5562	Ray, Manamohan, BA	Clerk, D A G P & T Office	7, Koilaghat Street	ditto
5563	Ray, Manimadhab, MA	Clerk, E B R	3, Koilaghat Street	ditto
5564	Ray, Manindra Bhusan	Assistant, Sun Life of Canada	12, Dalhousie Square, East	ditto

5565	Ray, Manmatha Nath, BL	Assistant, Accountant-General's Office, Bengal	Treasury Buildings	ditto
5566	Ray, Meghendra Lal, BA	Inspector, License Department, Calcutta Corporation	Municipal Office	ditto
5567	Ray, Nagendra Nath	Assistant, Office of the Director of Public Health, Bengal	Writers' Buildings	ditto
5568	Ray, Nalini Bhusan, BA	Assistant, Bengal Secretariat Record Room	Writers' Buildings	ditto
5569	Ray, Nanda Dulal	Head Clerk, Office of the Inspector of European Schools, Bengal	40-1A, Free School Street	ditto
5570	Ray, Nanda Kumar	Clerk, D A G P & T Office	7, Koilaghat Street	ditto
5571	Ray, Nandalal	Clerk, Telegraph Check Office	33, Dalhousie Square, South	ditto
5572	Ray, Narayan Das	Head Clerk, License Department, Calcutta Corporation	Municipal Office	ditto
5573	Ray, Narendra Krishna	Assistant, Bengal Secretariat, L S-G Department	Writers' Buildings	ditto
5574	Ray, Naresh Chandra	Clerk, Agency Office, E I R	E I R House	ditto
5575	Ray, Naresh Chandra, MA	Lecturer, City College	102-1, Amherst Street	ditto
5576	Ray, Niranjan Ch, BA	Clerk, Telegraph Check Office	33, Dalhousie Square, South	ditto
5577	Ray, Nirmal Chandra	Clerk, C E S C Ltd	Victoria House	ditto
5578	Ray, Nirode Kumar, MA, BL	Officer, Hindusthan Co-operative Insurance Society, Ld	Hindusthan Buildings	ditto
5579	Ray, Nityananda	Clerk, Telegraph Check Office	33, Dalhousie Square, South	ditto
5580	Ray, Nripendra Nath	Clerk, Agency Office, E I R	E I R House	ditto
5581	Ray, Panchanan, BL	Assistant, Accountant-General's Office, Bengal	Treasury Buildings	ditto
5582	Ray, Paresh Nath, BA	Bonded Cashier, Map Record and Issue Office, Survey of India	13, Wood Street	ditto
5583	Ray, P C	Assistant, Mackinnon, Mackenzie & Co	8, Strand Road	ditto
5584	Ray, Phanindra Nath	Assistant, Superintending Engineer's Office, Presy Circle, P W D	Writers' Buildings	ditto

No.	Names.	Style or calling.	Residence or place of business.	Religion.
5585	Ray, Phanindra Nath, BA	Assistant, Accountant-General's Office, Bengal	Treasury Buildings	Hindu
5586	Ray, P K	Assistant, Guest, Keen, Williams, Ld	7, Council House Street	ditto
5587	Ray, Prabodh Prakash	Stenographer, Bengal Secretariat, Finance Department	Writers' Buildings	ditto
5588	Ray, Prafulla Chandra	Assistant, Burn & Co, Ld	12, Mission Row	ditto
5589	Ray, Prafulla Chandra	Clerk, Telegraph Check Office	33, Dalhousie Square, South	ditto
5590	Ray, Prafulla Ratan	Assistant, Birla Bros, Ld	8, Royal Exchange Place	ditto
5591	Ray, Prahlad Chandra	Section Holder, Government of India Press	8, Hastings Street	ditto
5592	Ray, Pramatha Nath	Clerk, E B R	3, Koilaghat Street	ditto
5593	Ray, Pramatha Nath	Accountant, D J Keymer & Co, Ld	4, Lyons Range	ditto
5594	Ray, Prashanta Chandra, BA	Clerk, C C M's Office, E I R	E I R House	ditto
5595	Ray, Pratap Chandra	Clerk, D A G P & T Office	7, Koilaghat Street	ditto
5596	Ray, Rabindra Nath	Assistant, Bengal Secretariat, Revenue Department	Writers' Buildings	ditto
5597	Ray, Rajani Kanta	Cashier, G E's Office, Calcutta Division, P and A District	Fort William	ditto
5598	Ray, Rajendra Mohan	Cashier, Central Forms Store	166, Dharamtala Street	ditto
5599	Ray, Rajkumar	Head Clerk, Traffic Department, E B R	3, Kaylaghat Street	ditto
5600	Ray, Ram Govindo	Clerk, D A G P & T Office	7, Koilaghat Street	ditto
5601	Ray, Ram Lakshman	Stenographer, Office of the Controller of Purchase, Indian Stores Dept	6, Esplanade, East	ditto
5602	Ray, Ram Lal	Assistant, Accounts Deptt, Calcutta Corporation	Municipal Office	ditto

5603	Ray, Rampada	Assistant, Brooke Bond (India), Ld	2, Metcalfe Street	ditto
5604	Ray, Ramranjan	Accountant, J J C Bell & Co.	9, Clive Street	ditto
5605	Ray, Rashbehari	Stenographer, E B R	3, Koilaghat Street	ditto
5606	Ray, R C	Clerk, B I S N Co, Ld	8, Strand Road	ditto
5607	Ray, Rebati Mohan	Assistant, Controller's Office, Calcutta University	Senate House	ditto
5608	Ray, R N, BSc	Head Assistant, India Equitable Insurance Co, Ld	102, Clive Street	ditto
5609	Ray, Saktipada	Clerk, D A G P & T Office	7, Koilaghat Street	ditto
5610	Ray, Santosh Prasad	Clerk, Canals Divn	Treasury Buildings	ditto
5611	Ray, Satindra Nath	Clerk, National Bank of India, Ld	104, Clive Street	ditto
5612	Ray, Satyananda	Professor, Bangabasi College	25-1, Scott Lane	ditto
5613	Ray, Shachindra Nath	Clerk, Lloyds Bank, Ld	101-1, Clive Street	ditto
5614	Ray, Shachindra Nath, B.Sc	Assistant, Accountant-General's Office, Bengal	Treasury Buildings	ditto
5615	Ray, Shachindra Nath, BA	Assistant, Patent Office	1, Council House Street	ditto
5616	Ray, Shailendra Nath	Section Holder, Govt of India Press	8, Hastings Street	ditto
5617	Ray, Sharat Chandra	Assistant, Accountant-General's Office, Bengal	Treasury Buildings	ditto
5618	Ray, Sharat Chandra	Clerk, D A G P & T Office	7, Koilaghat Street	ditto
5619	Ray, Sharat Chandra	Assistant, MacNeill & Co	2, Fairlie Place	ditto
5620	Ray, Sharat Kumar	Assistant, Zoological Survey of India	Indian Museum	ditto
5621	Ray, Shashanka Shekhar	Clerk, Ralli Bros, Ld	16, Hare Street	ditto
5622	Ray, Shib Krishna	Clerk, Chief Mining Engineer's Office, Railway Board	1, Council House Street	ditto

No.	Names.	Style or calling.	Residence or place of business.	Religion.
5623	Ray, Shrish Chandra	Clerk, D A G P & T Office	7, Koilaghat Street	Hindu
5624	Ray, Shrish Chandra	Clerk, Imperial Bank of India	3, Strand Road	ditto
5625	Ray, Shrish Chandra	Inspector, Collection Department, Calcutta Corporation	Municipal Office	ditto
5626	Ray, Shrish Chandra	Clerk, Telegraph Check Office	33, Dalhousie Square, South	ditto
5627	Ray, Sripati Mohan	Clerk, Burmah Shell Co of India, Ld	Hongkong House	ditto
5628	Ray, Subodh Chandra, I, BL	Clerk, D A G P & T Office	7, Koilaghat Street	ditto
5629	Ray, Subodh Ch, II, BA	Clerk, D A G P & T Office	7, Koilaghat Street	ditto
5630	Ray, Sudhindra Nath, BA	Examiner of Accounts, Income-tax Office	6, Esplanade, East	ditto
5631	Ray, Sudhir Ch	Clerk, Telegraph Check Office	33, Dalhousie Square, South	ditto
5632	Ray, Sudhir Kumar, MSC	Demonstrator, Vidyasagar College	39, Shanker Ghose Lane	ditto
5633	Ray, Sudhir Kumar	Accountant, English Electric Co, Ld	D-4, Clive Buildings	ditto
5634	Ray, Sunil Chandra	Clerk, D A G P & T Office	7, Koilaghat Street	ditto
5635	Ray, Suniti Kumar, B com (Cal)	Articled Clerk, N K Roy & Co	2, Lyons Range	ditto
5636	Ray, Surendra Chandra, BA	S A S Clerk, Army Factory Accounts	6, Esplanade, East	ditto
5637	Ray, Surendra Kumar	Assistant, Royal Asiatic Society of Bengal	1, Park Street	ditto
5638	Ray, Surendra Nath, I	Clerk, D A G P & T Office	7, Koilaghat Street	ditto
5639	Ray, Suresh Chandra	Librarian, Zoological Survey of India	Indian Museum	ditto
5640	Ray, Sushil Chandra	Assistant, Sun Life of Canada	12, Dalhousie Square, East	ditto
5641	Ray, Tarak Bandhu	Assistant, National Insurance Co, Ld	7, Council House Street	ditto

5642	Ray, Taraknath, BA	Clerk, D A G P & T Office	7, Koilaghat Street	ditto
5643	Ray, T N	Engraver, Calcutta Mint	47, Strand Road	ditto
5644	Ray Barman, Binaya Kumar, BSc	Assistant, Accountant-General's Office, Bengal	Treasury Buildings	ditto
5645	Ray Chaudhuri, Akshoy Kumar	Assistant, Calcutta University	Senate House	ditto
5646	Ray Chaudhuri, A K	Audit Inspector, Port Commissioners' Office	Strand Road	ditto
5647	Ray Chaudhuri, Amal Krishna	Assistant, Accountant-General's Office, Bengal	Treasury Buildings	ditto
5648	Ray Chaudhuri, Anil Kumar	Assistant, Balmer, Lawrie & Co, Ld	103, Clive Street	ditto
5649	Ray Chaudhuri, Anukul Chandra	Sub-Head, Accounts Dept, E B R	3, Kaylaghat Street	ditto
5650	Ray Chaudhuri, Anukul Chandra	Assistant, Calcutta University	Senate House	ditto
5651	Ray Chaudhuri, Asita Ranjan	Clerk, D A G P & T Office	7, Koilaghat Street	ditto
5652	Ray Chaudhuri, Atul K	Ledger-keeper, Balmer, Lawrie & Co, Ltd	103, Clive Street	ditto
5653	Ray Chaudhuri, Dhirendra Nath	Head Clerk, Imperial Tobacco Co of India, Ld	37, Chowringhee	ditto
5654	Ray Chaudhuri, Dhirendra Nath	Clerk, Imperial Bank of India	3, Strand Road	ditto
5655	Ray Chaudhuri, Himangshu Kumar	Genl Manager, National Cement Mines & Industries, Ld	10, Clive Row	ditto
5656	Ray Chaudhuri, Jatindra Nath	Clerk, Imperial Bank of India	3, Strand Road	ditto
5657	Ray Chaudhuri, Jatindra Nath	Assistant, Accountant-General's Office, Bengal	Treasury Buildings	ditto
5658	Ray Chaudhuri, J C, MA, BL	Supervisor, Central Bank of India, Ld	71, Cross Street	ditto
5659	Ray Chaudhuri, Karali Charan, BA	Assistant, Accountant-General's Office, Bengal	Treasury Buildings	ditto
5660	Ray Chaudhuri, Krishna Bihari, MA, BL	Assistant, Controller's Office, Calcutta University	Senate House	ditto

No.	Names	Style or calling.	Residence or place of business.	Religion.
5661	Ray Chaudhuri, Krishna Kinkar	Clerk, Collection Department, Calcutta Corporation	Municipal Office	Hindu
5662	Ray Chaudhuri, Kshitish Ch	Clerk, Marine Section, Port Commissioners	Strand Road	ditto
5663	Ray Chaudhuri, Kshitish Ch	Clerk, Telegraph Check Office	33, Dalhousie Sq, South	ditto
5664	Ray Chaudhuri, Kumud K	Head Clerk, Traffic Department, E B R	3, Koilaghat Street	ditto
5665	Ray Chaudhuri, Lalit Kumar	Sub-Inspector, License Department, Calcutta Corporation	Municipal Office	ditto
5666	Ray Chaudhuri, Manindra Nath	Assistant, Calcutta Improvement Trust	5, Clive Street	ditto
5667	Ray Chaudhuri, Mukul Mohan, BA	Assistant, Accountant-General's Office, Bengal	Treasury Buildings	ditto
5668	Ray Chaudhuri, Mukunda Lal	Hd Clerk, Traffic Department, E B R	3, Kaylaghat Street	ditto
5669	Ray Chaudhuri, N, Bsc.	Asstt Master, Armenian College	39, Free School Street	ditto
5670	Ray Chaudhuri, Nirmal K	Genl Store-keeper, Govt of India Press	8, Hastings Street	ditto
5671	Ray Chaudhuri, Panchanan	Reader, Government of India Press	8, Hastings Street	ditto
5672	Ray Chaudhuri, Panchanan Kinkar, BL	Inspector, License Department, Calcutta Corporation	Municipal Office	ditto
5673	Ray Chaudhuri, P C	Clerk, Office of the Chief Mining Engineer, Railway Board	1, Council House Street	ditto
5674	Ray Chaudhuri, Prafulla Chandra	Clerk, Government Factory Inspection Department, Bengal	40-1A, Free School Street	ditto
5675	Ray Chaudhuri, Prafulla Nath	Assistant, Bird & Co	1-1, Clive Street	ditto
5676	Ray Chaudhuri, Prithvish Chandra	Inspector, Collection Department, Calcutta Corporation	Municipal Office	ditto
5677	Ray Chaudhuri, Radhanath	Clerk, D A G P & T Office	7, Koilaghat Street	ditto
5678	Ray Chaudhuri, Radharaman, BA	Clerk, Collection Department, Calcutta Corporation	Municipal Office	ditto
5679	Ray Chaudhuri, Rajendra Nath	Stenographer, I T Office	3, Government Place, West	ditto

5680	Ray Chaudhuri, Santosh Nath	Assistant, A-G's Office, Bengal	Treasury Buildings	ditto
5681	Ray Chaudhuri, Shailendra Nath, BL	Clerk, Collection Department, Calcutta Corporation	Municipal Office	ditto
5682	Ray Chaudhuri, Shamadas	Assistant, Bird & Co	1-1, Clive Street	ditto
5683	Ray Chaudhuri, Shambhu Chandra	Assistant Estimator, Calcutta Improvement Trust	5, Clive Street	ditto
5684	Ray Chaudhuri, S N	Assistant, Oriental Government Security Life Assurance Co, Ld	2, Clive Row	ditto
5685	Ray Chaudhuri. Suresh Chandra	Assistant, Calcutta Improvement Trust	5, Clive Street	ditto
5686	Ray Chaudhuri, Sushil Chandra	Assistant, McLeod & Co	28, Dalhousie Square	ditto
5687	Rezwi, Taher	Lecturer, Presidency College	86-1, College Street	Mahomedan
5688	Rhotgi, M L	Broker, H J Foster & Co, Ld	Sassoon House	Hindu
5689	Rout, Charu Chandra	Assistant, Balmer, Lawrie & Co, Ld	103, Clive Street	Christian
5690	Rout, Tarini Bhusan, BA	Assistant, A-G's Office, Bengal	Treasury Buildings	Hindu
5691	Rub, Abdur (Maulvi)	Head Clerk, Income-tax Office	6, Esplanade, East	Mahomedan
5692	Rudra, Shailendra Nath	Clerk, Telegraph Check Office	33, Dalhousie Square South	Hindu
	S			
5693	Sadasivan, K	Clerk. Dunlop Rubber Co (India), Ld	42, Free School Street	Hindu
5694	Sadhu, Amiya Nath	Assistant, National Insurance Co, Ld	7, Council House Street	ditto
5695	Sadhu, Manilal	Coal Department-in-charge, Williamson, Magor & Co	4, Mangoe Lane	ditto
5696	Sadhu, Robindra Nath	Clerk, Burmah Shell Co of India, Ld	Hongkong House	ditto
5697	Sadhu, Siddheshwar	Cashier, Govan Bros, Ld	20, Park Street	ditto
5698	Sadhu, Umapada	Assistant, Calcutta University	Senate House	ditto
5699	Sadhukhan, Matilal	Assistant, Accountant-General's Office, Bengal	Treasury Buildings	ditto

No.	Names.	Style or calling	Residence or place of business.	Religion.
5700	Saha, Dhirendra Krishna	Engraver, Engraving Office, Survey of India	13, Wood Street	Hindu
5701	Saha, Dhirendra M, BSc (Glas)	Lighting Supervisor, Calcutta Corporation	Municipal Office	ditto
5702	Saha, Gopal Chandra, BSc, GDA	Accountant, Bhattacharjee & Co	28, Pollock Street	ditto
5703	Saha, Gopi Jiban	Engraver, Engraving Office, Survey of India	13, Wood Street	ditto
5704	Saha, Narbheram Tulsidas	Assistant, Jewanlal (1929), Ld	101, Clive Street	Jain
5705	Saha, Nathalal Jivraj	Assistant, Jewanlal (1929), Ld	101, Clive Street	Hindu
5706	Saha, Prafulla Nath	Assistant, Office of the Director of Industries, Bengal	40-1A, Free School Street	ditto
5707	Saha, Radhakrishna	Assistant, Bengal Chemical & Pharmaceutical Works, Ld	31, Chittaranjan Avenue, South	ditto
5708	Saha, Sachchidananda	Assistant, Holmes, Wilson & Co, Ld	Norton Buildings	ditto
5709	Saha, Sudhir Kumar	Clerk, D A G P & T Office	7, Koilaghat Street	ditto
5710	Saha, Suresh Chandra, BA	Clerk, D A G P & T Office	7, Koilaghat Street	ditto
5711	Saha, Suresh Chandra	Assistant, Accountant-General's Office, Bengal	Treasury Buildings	ditto
5712	Saha, Susil Kumar	Clerk, D A G P & T Office	7, Koilaghat Street	ditto
5713	Saha, Susil Kumar	Steno-typist, W. T Henley's Telegraph Works Co, Ld	Old Court House Corner	ditto
5714	Saha, Tarapada	Clerk, Telegraph Check Office	33, Dalhousie Square, South	ditto
5715	Saha, Upendra Nath	Under-Broker, F C Pallachi & Co	7, Royal Exchange Place	ditto
5716	Salamatulla, M	Assistant, Bengal Secretariat, Irrigation Department	Writers' Buildings	Mahomedan
5717	Salim, Shah A S	Assistant Master, Calcutta Madrassah	19, Wellesley Square	ditto
5718	Sama, Kandadi Subramania	Assistant, Commercial Credit Corporation, Ld	20, Park Street	Hindu

5719	Samad, Abdus (Maulvi), MA	Lecturer, Islamia College	8, Wellesley Street	Mahomedan
5720	Samad, Abdus (Kazi)	Assistant, Agriculture and Industries Department, Bengal	Writers' Buildings	ditto
5721	Samaddar, Shibendra Nath, BA	Clerk, D A G P & T Office	7, Koilaghat Street	Hindu
5722	Samanta, Chandra Madhab	Assistant, Bengal Chemical & Pharmaceutical Works, Ld	31, Chittaranjan Avenue, South	ditto
5723	Samanta, Harinarayan, BSc	Bill Overseer, Calcutta Corporation, D E I	79, Cornwallis Street	ditto
5724	Samanta, Paban Chandra	Clerk, D A G P & T Office	7, Koilaghat Street	ditto
5725	Sampat, M D	Assistant, National Insurance Co, Ld	7, Council House Street	ditto
5726	Sanghota, B S	Special Inspector, Traffic Deptt, E B R	3, Koilaghat Street	Sikh
5727	Sankar, Kadayam Gopal	Assistant, Imperial Library	6, Esplanade, East	Hindu
5728	Sankaran, N S	Assistant, Guest, Keen, Williams, Ld	7, Council House Street	ditto
5729	Sankernarain, T R	Assistant, Bird & Co	1-1, Clive Street	ditto
5730	Santra, Panchanan	Accountant, Begg, Dunlop & Co, Ld	2, Hare Street	ditto
5731	Sanyal, Abinash Chandra	In-charge, Litho Despatching Section, Photo-Litho Office, Survey of India	14, Wood Street	ditto
5732	Sanyal, A K	Merchant	1, British Indian Street	ditto
5733	Sanyal, Ananta Lal, BSc	Assistant, Accountant-General's Office, Bengal	Treasury Buildings	ditto
5734	Sanyal, Bishwa Ranjan, BA	Assistant, Bengali Translator's Office	Writers' Buildings	ditto
5735	Sanyal, Dilip Kumar, MA	Lecturer, Vidyasagar College	39, Shankar Ghose Lane	ditto
5736	Sanyal, Harendra Nath	Assistant, Cox & Kings (Agents), Ld	5, Bankshall Street	ditto
5737	Sanyal, Hiran Kumar, MA	Assistant Editor, Bengal Co-operative Journal	102-1, Clive Street	Brahmo
5738	Sanyal, Kamal Kumar, BA	Assistant, Accountant-General's Office, Bengal	Treasury Buildings	Hindu
5739	Sanyal, K C, MSc	Demonstrator, St Paul's College	33/1, Amherst Street	ditto

No.	Names.	Style or calling.	Residence or place of business.	Religion.
5740	Sanyal, Lalit Mohon ..	.. Stenographer, Burmah Shell Co of India, Ld ..	.. Hongkong House	Hindu
5741	Sanyal, Manindra Nath, BA, BT	.. Assistant Master, Bethune Collegiate School ..	.. 181, Cornwallis Street	ditto
5742	Sanyal, Manoshija, MA ..	.. Assessing Inspector, Calcutta Corporation ..	.. Municipal Office	ditto
5743	Sanyal, Manmatha Nath	.. Assistant, The Eastern Bank, Ld	.. 9, Clive Street	ditto
5744	Sanyal, Naresh Chandra	.. Director, The New Bengal Bank, Ld	.. 15, Clive Street	ditto
5745	Sanyal, Ramlal, MA ..	.. Assistant, A-G's Office, Bengal	.. Treasury Buildings	ditto
5746	Sanyal, Shailendra Nath, BA	.. Salesman, Dodge & Seymour, Ld	.. Tower House, Chowringhee Square ..	ditto
5747	Sanyal, Siddhinath ..	.. Cashier, Phœnix Assurance Co, Ld	.. 28, Dalhousie Square	ditto
5748	Sanyal, Sujanendra ..	.. Assistant, Balmer, Lawrie & Co, Ld	.. 103, Clive Street	ditto
5749	Sanyal, Tarapada, MA, BT	.. Assistant Master, Hindu School	.. College Square	ditto
5750	Sarangan, Appaswami ..	.. Assistant, Corn Products Co (India), Ld ..	.. 4, Lyons Range	ditto
5751	Sarbadhikary, Nagendra Kumar	.. Reader, *Statesman*, Ld	.. Statesman House	ditto
5752	Sardar, Gunasindhu, MSc ..	.. Assistant Master, Sanskrit Collegiate School ..	.. College Square	ditto
5753	Sardar, Mahomed Abdullah	.. Assistant, Bengal Secretariat, P W D	.. Writers' Buildings	Mahomedan
5754	Sarkar, Abdul Latiff ..	.. Second Clerk, Office of the Inspector of European Schools, Bengal.	40-1A, Free School Street ..	ditto
5755	Sarkar, Abinash Chandra	.. Supervisor, Drainage, Calcutta Corporation ..	.. Municipal Office	Hindu
5756	Sarkar, Ajar Chandra ..	.. Assistant, Calcutta University	.. Senate House	ditto
5757	Sarkar, A K, MSc ..	.. Demonstrator, St. Paul's College	.. 33-1, Amherst Street	ditto
5758	Sarkar, A. K, BA ..	.. Divisional Accountant, A-G's Office, Bengal ..	.. Treasury Buildings	ditto
5759	Sarkar, Akshaya Kumar	.. Assistant, Calcutta Improvement Trust	.. 5, Clive Street	ditto

5760	Sarkar, Amulya Ratan	Clerk, Agency Office, E I R	E I R House	ditto
5761	Sarkar, Anukul Chandra	Demonstrator, Presidency College	86-1, College Street	ditto
5762	Sarkar, Ardhendu Shekhar	Assistant Cashier, North British and Mercantile Insurance Co, Ld	101-1, Clive Street	ditto
5763	Sarkar, Ashutosh	Assistant, National Insurance Co, Ld	7, Council House Street	ditto
5764	Sarkar, Atul Krishna	Head Clerk, Fire Reinsurance Department, New Zealand Insurance Co, Ld	26, Dalhousie Square	ditto
5765	Sarkar, Atul Krishna	Clerk, D A G P & T Office	7, Koilaghat Street	ditto
5766	Sarkar, Bhabendra Kumar	Clerk, Martin & Co	12, Mission Row	ditto
5767	Sarkar, Bhola Nath	Assistant, Office of the Director of Public Instruction, Bengal	Writers' Buildings	ditto
5768	Sarkar, Bibhuti Bhusan	Clerk, D A G P & T Office	7, Koilaghat Street	ditto
5769	Sarkar, Bibhuti Bhusan	Clerk, Booking Section, Port Commissioners	Strand Road	ditto
5770	Sarkar, Bijaya Bhusan, BL	Clerk, Assessor's Department, Calcutta Corporation	Municipal Office	ditto
5771	Sarkar, Bijaya Kumar, MA	Examiner of Accounts, Income-tax Office	6, Esplanade, East	ditto
5772	Sarkar, Bijaya Kumar	Assistant, Reserve Bank of India	8, Council House Street	ditto
5773	Sarkar, Binaya Kumar BA	Clerk, D A G P & T Office	7, Koilaghat Street	ditto
5774	Sarkar, Birendra N	Assistant, Balmer Lawrie & Co, Ld	103, Clive Street	ditto
5775	Sarkar, Bishnupada	Assistant, Bengal Secretariat Record Room	Writers' Buildings	ditto
5776	Sarkar, Bissheshwar	Clerk, Shaw, Wallace & Co	4, Bankshall Street	ditto
5777	Sarkar, Brojendra Nath	Assistant, Lionel Edwards, Ld	D-1, Clive Buildings	ditto
5778	Sarkar, Chandi Charan	Salesman, Adair, Dutt & Co, Ld	5, Dalhousie Square	ditto
5779	Sarkar, Charu Chandra	Assistant, Accountant-General's Office, Bengal	Treasury Buildings	ditto

No.	Names.	Style or calling.	Residence or place of business.	Religion.
5780	Sarkar, Dhirendra Nath ..	.. Clerk, Martin & Co	.. 12, Mission Row ..	.. Hindu
5781	Sarkar, Harasundar, MA ..	.. Clerk, D A G P & T Office	.. 7, Koilaghat Street ..	.. ditto
5782	Sarkar, Haridas ..	.. Assistant, Bengal Secretariat, Revenue Department	.. Writers' Buildings ..	.. ditto
5783	Sarkar, Harilal ..	.. Assistant, Bengal Secretariat, Commerce Department	.. Writers' Buildings ..	.. ditto
5784	Sarkar, Hari Narayan ..	.. Surveyor and Estimator, Calcutta Corporation ..	.. Municipal Office ..	.. ditto
5785	Sarkar, Haripada ..	.. Head Assistant, I R G P & T W Co, Ld ..	.. 7, Old Court House Street	.. ditto
5786	Sarkar, Harisadhan ..	.. Overseer, Calcutta Improvement Trust	.. 5, Clive Street ..	.. ditto
5787	Sarkar, Harisadhan ..	.. Assistant, Accountant-General's Office, Bengal ..	.. Treasury Buildings ..	.. ditto
5788	Sarkar, Harish Chandra, BA	.. Clerk, D A G P & T Office	.. 7, Koilaghat Street ..	.. ditto
5789	Sarkar, Hem Chandra ..	.. Assistant, Commercial Intelligence Department ..	.. 1, Council House Street ..	.. ditto
5790	Sarkar, Heramba Chandra	.. Stenographer, Income-tax Office	.. 3, Government Place West	.. ditto
5791	Sarkar, Jagadish Chandra	.. Accountant, George, Spencer, Moulton & Co (India), Ld	.. 8, Esplanade, East ..	.. ditto
5792	Sarkar, Jatindra Mohan	.. Clerk, D A G P & T Office	.. 7, Koilaghat Street ..	.. ditto
5793	Sarkar, Jitendra Nath ..	.. Stenographer, Engineering Department, E B R ..	.. 3, Koilaghat Street ..	.. ditto
5794	Sarkar, Jitendra Nath ..	.. Salesman, Volkart Brothers	.. 11, Clive Street ..	.. ditto
5795	Sarkar, Kalicharan ..	.. Checking Assistant, Imperial Bank of India ..	.. 3, Strand Road ..	.. ditto
5796	Sarkar, Kalipada, BA ..	.. Clerk, Army Factory Accounts	.. 6, Esplanade, East ..	.. ditto
5797	Sarkar, Kartic Chandra ..	.. Assistant, Lionel Edwards, Ld	.. D-1, Clive Buildings ..	.. ditto
5798	Sarkar, Karunamaya ..	.. Assistant, Office of the Director of Public Health, Bengal	.. Writers' Buildings ..	.. ditto
5799	Sarkar, K C, BA ..	.. Assistant, S R Batliboi & Co	.. 1-B, Old Post Office Street	.. ditto

5800	Sarkar, Khagendra Nath	Assistant Accountant, Hindusthan Co-operative Insurance Society, Ld.	Hindusthan Buildings	..	ditto
5801	Sarkar, Khagendra Nath	Clerk, Ralli Bros, Ld	16, Hare Street	..	ditto
5802	Sarkar, Kishori Mohan, BA	Accounts Clerk, E B R	3, Koilaghat Street	..	ditto
5803	Sarkar, Krishna Lal, BA	Clerk, D A G P & T. Office	7, Koilaghat Street	..	ditto
5804	Sarkar, Kumud Nath	Lighting Inspector, Calcutta Corporation	Municipal Office	..	ditto
5805	Sarkar, Lalmohan	Director, Incorporated Insurance, Ld	5, Clive Ghat Street	..	ditto
5806	Sarkar, Manaranjan,	Food Inspector, Calcutta Corporation (D IV)	91, Durga Ch Doctor Lane	..	ditto
5807	Sarkar, Mani Mohan	Sanitary Officer, Calcutta Corporation	22, Mirzapore Street	..	ditto
5808	Sarkar, Manindra Nath, BA	Assistant, Accountant-General's Office, Bengal	Treasury Buildings	..	ditto
5809	Sarkar, Manmatha Nath	Assistant, Burn & Co, Ld	12, Mission Row	..	Brahmo
5810	Sarkar, Manmohan	Steno-Typist, W T, Henley's Telegraph Works, Co. Ld	Old Court House Corner	..	Hindu
5811	Sarkar, Monotosh Kumar	Assistant, James Finlay & Co, Ld	1, Clive Street	..	ditto
5812	Sarkar, Mati Lal	Assistant, McLeod & Co	28, Dalhousie Square	..	ditto
5813	Sarkar, Mati Lal	Clerk, Central Forms Store	166, Dharamtala Street	..	ditto
5814	Sarkar, Nalin Bihari	Head Clerk, Fire Department, New Zealand Insurance Co, Ld	26, Dalhousie Square	..	ditto
5815	Sarkar, Nalini Nath, BA	Inspector, License Department, Calcutta Corporation	Municipal Office	..	ditto
5816	Sarkar, Nani Gopal	Assistant, National Insurance Co, Ld	7, Council House Street	..	ditto
5817	Sarkar, Narayan Das, BL	Inspector, License Department, Calcutta Corporation	Municipal Office	..	ditto
5818	Sarkar, Naresh Chandra	Clerk, C E S C Ld	Victoria House	..	ditto
5819	Sarkar, Nishi Kanta	Clerk, D A G P & T Office	7, Koilaghat Street	..	ditto
5820	Sarkar, N L	Assistant, Guest, Keen, Williams, Ld	7, Council House Street	..	ditto

No.	Names	Style or calling.	Residence or place of business.	Religion.
5821	Sarkar, Noujesh Ali, BSC	Assistant, Bengal Secretariat, Accounts Deptt	Writers Buildings	Mahomedan
5822	Sarkar, Pabitraranjan	Officer, Hindusthan Co-operative Insurance Society, Ltd	Hindusthan Buildings	Hindu
5823	Sarkar, Panchu Lal	Salesman, I R G P & T W Co, Ld	7, Old Court House Street	ditto
5824	Sarkar, Phanindra Nath	Assistant, Accountant-General's Office, Bengal	Treasury Buildings	ditto
5825	Sarkar, Prafulla Kumar, MA, BT	Assistant Head Master, Calcutta Training School	8, European Asylum Lane	ditto
5826	Sarkar, Pran Kumar	Clerk, Calcutta Improvement Trust	5, Clive Street	ditto
5827	Sarkar, Rajendra Nath	Clerk, Martin & Co	12, Mission Row	ditto
5828	Sarkar, Rampada	Clerk, Royal Calcutta Turf Club	11, Russell Street	ditto
5829	Sarkar, Ramesh Chandra	Estimator, Government of India Press	8, Hastings Street	ditto
5830	Sarkar, Ramrenu, BA	Assistant, Income-tax Office	6, Esplanade, East	ditto
5831	Sarkar, Sailesh Chandra	Building Inspector, Calcutta Corporation	Municipal Office	ditto
5832	Sarkar, Satish Chandra	Assessing Inspector, Calcutta Corporation	Municipal Office	ditto
5833	Sarkar, Satish Chandra	Assistant, Reserve Bank of India	8, Council House Street	ditto
5834	Sarkar, Satish Chandra, MA	Assistant, Accountant-General's Office, Bengal	Treasury Buildings	ditto
5835	Sarkar, Satish Chandra	Accountant, Office of the Superintendent, Governor's Estates	9, Government Place, North	ditto
5836	Sarkar, Satya Charan	Clerk, Shaw, Wallace & Co	4, Bankshall Street	ditto
5837	Sarkar, Shachindra Nath	Clerk, C A O's Office, E I R	E I R House	ditto
5838	Sarkar, Shachindra Kumar	Assistant, Commercial Intelligence Deptt	1, Council House Street	ditto
5839	Sarkar, Shailendra Nath	Clerk, Traffic Deptt, E B R	3, Koilaghat Street	ditto
5840	Sarkar, Sharat Chandra	Assistant, Mathematical Instrument Office	15, Wood Street	ditto
5841	Sarkar, Shishir Kumar	Assistant, Lovelock & Lewes	4, Lyons	ditto

5842	Sarkar, Shyama Charan, BA	Clerk, D A G P & T Office	7, Koilaghat Street	ditto
5843	Sarkar, Sourendra Mohan	Clerk, D A G P & T Office	7, Koilaghat Street	ditto
5844	Sarkar, Sudhir Kumar, MA	Assistant, Reserve Bank of India	8, Council House Street	ditto
5845	Sarkar, Sushil Kumar	Offg. Accountant, A-G's Office, Bengal	Treasury Buildings	ditto
5846	Sarkar, Tarapada	Clerk, Calcutta Improvement Trust	5, Clive Street	ditto
5847	Sarkar, Tinkari	Assistant, Office of the Controller of Currency	Treasury Buildings	ditto
5848	Sarkar, Tulsi Charan, BA	Accounts Clerk, E B R	3, Koilaghat Street	ditto
5849	Sarkar, Wajed Ali, BA	Assistant, Bengal Secretariat, Finance Department	Writers' Buildings	Mahomedan
5850	Sarkel, Prabhat Chandra, BA	Assistant, Accccuntant-General's Office, Bengal	Treasury Buildings	Hindu
5851	Sarma, R	Clerk, Dunlop Rubber Co (India), Ld	42, Free School Street	ditto
5852	Sarowar, Md. Gholam, BA	Assistant, Accountant General's Office, Bengal	Treasury Buildings	Mahomedan
5853	Sasmal, K C	Assistant, Jessop & Co, Ld	93, Clive Street	Hindu
5854	Sattar, Abdus, BA	Examiner of Accounts, Income-tax Office	6, Esplanade, East	Mahomedan
5855	Savant, A B	Fire Department, British India General Insurance Co, Ld	Norton Buildings	Hindu
5856	Seal, A T	Assistant, P & O Banking Corporation, Ld	1, Fairlie Place	ditto
5857	Seal, Balai Chand, M COM	Clerk, D A G P & T Office	7, Koilaghat Street	ditto
5858	Seal, Bepin Behari	Manager, John S Elmore, Ld	7, Bowbazar Street	ditto
5859	Seal, Bijaya Krishna	Deputy Cashier, Gillanders, Arbuthnot & Co	8, Clive Street	ditto
5860	Seal, Bijaya Krishna, BA	Assistant, Bengal Secretariat, P W D	Writers' Buildings	ditto
5861	Seal, Gour Chand	Clerk, D A G P & T Office	7, Koilaghat Street	ditto

No.	Names.	Style or calling.	Residence or place of business.	Religion.
5862	Seal, Harendra Nath	Estimator and Designer, Martin & Co	12, Mission Row	Hindu
5863	Seal, Jagannath	Clerk, Burmah Shell Co of India, Ld	Hongkong House	ditto
5864	Seal, Keshab Chandra	Assistant, Accountant-General's Office, Bengal	Treasury Buildings	ditto
5865	Seal, Krishna Lal	Clerk, Ralli Brothers, Ld	16, Hare Street	ditto
5866	Seal, Krishna Lal	Book-keeper, Harrisons & Crosfield, Ld	6, Church Lane	ditto
5867	Seal, Lalit Mohan	Clerk, Telegraph Check Office	33, Dalhousie Square South	ditto
5868	Seal, Madan Mohan	Clerk, Imperial Bank of India	3, Strand Road	ditto
5869	Seal, Mani Mohan	Assistant, Begg Dunlop & Co, Ld	2, Hare Street	ditto
5870	Seal, Mukta Lal	Head Assistant, Sec V, Accounts Department, Calcutta Corporation.	Municipal Office	ditto
5871	Seal, Nitai Chand	Clerk, Chartered Bank of India, Australia and China	1-1, Clive Street	ditto
5872	Seal, Paresh Nath	Clerk, Traffic Deptt, E B R	3, Koilaghat Street	ditto
5873	Seal, Pashupati Nath, BA	S A S Clerk, Army Factory Accounts	6, Esplanade, East	ditto
5874	Seal, Prabodh Chandra	Assistant, Balmer, Lawrie & Co, Ld	103, Clive Street	ditto
5875	Seal, Rash Behari	Assistant, Reserve Bank of India	8, Council House Street	ditto
5876	Seal, Sharat Chandra	Accountant, Accountant-General's Office, Bengal	Treasury Buildings	ditto
5877	Seal, Subal Lal	Assistant, Reserve Bank of India	8, Council House Street	ditto
5878	Seal, Sharat Chandra	Assistant, Lionel Edward, Ld	D-1, Clive Buildings	ditto
5879	Sen, Abani Nath, BA	Clerk, Telegraph Check Office	33, Dalhousie Square, South	ditto
5880	Sen, Ajit Narayan	Overseer, Government of India Press	8, Hastings Street	ditto
5881	Sen, Amulya Chandra	Hd Clerk, Imperial Bank of India, Clive Street Branch	8, Clive Street	ditto

5882	Sen, Amulya Charan	Assistant, Price, Waterhouse, Peat & Co	B-4, Clive Buildings	ditto
5883	Sen, Amulya Charan	Security Clerk, Stewart & Co	8, Clive Street	ditto
5884	Sen, Amulya Kumar	Clerk, Macmillan & Co, Ld	294, Bowbazar Street	ditto
5885	Sen, Amulya Kumar	Clerk, Imperial Bank of India	3, Strand Road	ditto
5886	Sen, Anath Nath	Assistant, Office of the I-G of Registration, Bengal	Writers' Buildings	ditto
5887	Sen, Anil Chandra	Assistant, Office of the Private Secretary to H E the Governor of Bengal.	Government House	ditto
5888	Sen, Arunmaya	Clerk, Ralli Brothers, Ld	16, Hare Street	ditto
5889	Sen, Asharanjan	Assistant, Office of the Inspector-General of Prisons, Bengal	Writers' Buildings	ditto
5890	Sen, Atul Chandra	Instructor, Government Commercial Institute	11, Hastings Street	ditto
5891	Sen, Atul Krishna	Assistant Cashier, Accountant General's Office, Bengal	Treasury Buildings	ditto
5892	Sen, Bata Krishna, MA	Assistant, Commercial Intelligence and Statistics Deptt	1, Council House Street	ditto
5893	Sen, Bhujendra Bhusan	Stenographer, Land Acquisition Office	5, Bankshall Street	ditto
5894	Sen, Bijan Bihari, MA	Assistant Accountant, Central Bank of India, Ld	10, Lindsay Street	ditto
5895	Sen, Bijayapada	Assistant, Andrew, Yule & Co, Ld	8, Clive Row	ditto
5896	Sen, Birendra Lal	Computor, C E's Office, E I R	E I R House	ditto
5897	Sen, Birendra Nath	Assistant, Calcutta Improvement Trust	5, Clive Street	ditto
5898	Sen, Bireshwar	Clerk, C A O's Office, E I R	E I R House	ditto
5899	Sen, Braja Nath	Head Clerk (Sales), I B P Co, Ld	8, Clive Street	ditto
5900	Sen, Brajendra Nath	Organiser, The Bharat Insurance Co, Ld	Chittaranjan Avenue	ditto
5901	Sen, Chandi Charan, BA	Assistant, Reserve Bank of India	8, Council House Street	ditto

No	Names.	Style or calling.	Residence or place of business.	Religion.
5902	Sen, Debendra Nath	Clerk, Watch & Ward Department, E I R	E I R House	Hindu
5903	Sen, Debendra Nath	Personal Assistant to the I-G of Registration	Writers' Buildings	ditto
5904	Sen, Dhirendra Nath	Assistant, Bird & Co	1-1, Clive Street	ditto
5905	Sen, Dinabandhu	Assistant, Reserve Bank of India	8, Council House Street	ditto
5906	Sen, Dulichand	Cashier, Bombay Co, Ld	19, British Indian Street	ditto
5907	Sen, Dwijendra Nath	Assistant, Office of the Director of Public Instruction, Bengal	Writers' Buildings	ditto
5908	Sen, D K	Assistant, Balmer Lawrie & Co, Ld	103, Clive Street	ditto
5909	Sen, Gokul Chandra	Clerk, B R Section, Port Commissioners' Office	Strand Road	ditto
5910	Sen, Gokul Chandra	Invoice Clerk, Begg, Dunlop & Co, Ld	2, Hare Street	ditto
5911	Sen, Gorachand, BL	Court Clerk, C C M's Office, E I R	E I R House	ditto
5912	Sen, Gour Chandra	Assistant, Accountant-General's Office, Bengal	Treasury Buildings	ditto
5913	Sen, Gour Kishore	Assistant, Income-tax Office	6, Esplanade, East	ditto
5914	Sen, Haridas	Assistant, Mackinnon, Mackenzie & Co	16, Strand Road	ditto
5915	Sen, Haripada	Assistant, Mackinnon, Mackenzie & Co	16, Strand Road	ditto
5916	Sen, Hari Prasad	Head Clerk, Photo-Litho Office, Survey of India	14, Wood Street	ditto
5917	Sen, Hemanta Kumar M.A.	Lecturer, Government Commercial Institute	11, Hastings Street	ditto
5918	Sen, Hemanta Kumar	Assistant, J Thomas & Co	8, Mission Row	ditto
5919	Sen, Hem Chandra, BL	Inspector, License Department, Calcutta Corporation	Municipal Office	ditto
5920	Sen, Hiralal	Assistant, Accountant-General's Office, Bengal	Treasury Buildings	ditto
5921	Sen, Jogesh Chandra, BA	Assistant, Income-tax Office	3, Government Place, West	ditto

5922	Sen, Jugal Kishore	Examiner, Imperial Bank of India	3, Strand Road	ditto
5923	Sen, Jyotish Chandra	Superintendent, Bills Dept, Central Bank of India, Ld	100, Clive Street	ditto
5924	Sen, Jyotish Chandra, BSC	Head Master, Brahmo Boys' School	31, Jhamapukur Lane	Brahmo
5925	Sen, Kanta Nath	Instructor, Government Commercial Institute	11, Hastings Street	Hindu
5926	Sen, Karunamaya	Assistant, Lovelock & Lewes	4, Lyons Range	ditto
5927	Sen, Kausiki Kumar	Clerk, Agent's Office, E I R	E I R House	ditto
5928	Sen, Kedar Nath	Clerk, Calcutta Improvement Trust	5, Clive Street	ditto
5929	Sen, Keshab Chandra	Ledger-keeper, Bombay Co, Ld	19, British Indian Street	ditto
5930	Sen, Keshab Chandra	Sr Clerk, Harrisons & Crosfield, Ld	6, Church Lane	ditto
5931	Sen, Kiran Chandra	Assistant, Calcutta University	Senate House	ditto
5932	Sen, Krishna Bihari	Clerk, C M E's Office, E I R	E I R House	ditto
5933	Sen, Kshirode Chandra	Clerk, Assessor's Department, Calcutta Corporation	Municipal Office	ditto
5934	Sen, Kshitindra Nath, BL	Assistant Secretary, Great India Insurance, Ld	14, Clive Street	ditto
5935	Sen, Kushendra Lal	Clerk, Kilburn & Co	4, Fairlie Place	ditto
5936	Sen, Lakshman Chandra	Clerk, Telegraph Check Office	33, Dalhousie Square, South	ditto
5937	Sen, Lakshmi Kanta	Clerk, Ralli Brothers, Ld	16, Hare Street	ditto
5938	Sen, Makhan Gopal, BA	Clerk, D A G P & T Office	7, Koilaghat Street	ditto
5939	Sen, Mani Bhusan, BSC	Assistant, Accountant-General's Office, Bengal	Treasury Buildings	ditto
5940	Sen, Manik Lal	Clerk, C E's Office, E I R	E I R House	ditto
5941	Sen, Manmatha Nath	Assistant, Queensland Insurance Co, Ld	6, Royal Exchange Place	ditto
5942	Sen, Manmatha Nath	Ledger-keeper, Bombay Co, Ld	19, British Indian Street	ditto
5943	Sen, Manmatha Ranjan	Clerk, Telegraph Check Office	33, Dalhousie Square, South	ditto

No.	Names.	Style or calling.	Residence or place of business.	Religion.
5944	Sen, Manomit	Clerk, Traffic Department, E B R	3, Koilaghat Street	Hindu
5945	Sen, Mihir Kumar, MA	Professor, Vidyasagar College	39, Sankar Ghose Lane	ditto
5946	Sen, Nagendra Nath, B SC	Divisional Accountant, Accountant-General's Office, Bengal	Treasury Buildings	ditto
5947	Sen, Nagendra Nath	Accountant, Office of the Superintendent, Governor's Estates	Government House	ditto
5948	Sen, Nagendra Nath	Jr Superintendent, Reserve Bank	8, Council House Street	ditto
5949	Sen, Nandalal (Dr), LMS	Food Inspector, Calcutta Corporation	22, Mirzapore Street	ditto
5950	Sen, Narendra Lal	Assistant, Controller's Office, Calcutta University	Senate House	ditto
5951	Sen, Narendra Narayan	Audit Inspector, Port Commissioners' Office	Strand Road	ditto
5952	Sen, Narendra Nath	Clerk, Office of the Chief Mining Engineer, Railway Board	1, Council House Street	ditto
5953	Sen, Narendra Nath	Assistant, Presidency College	86-1, College Street	ditto
5954	Sen, Naresh Chandra	Assistant, Accountant-General's Office, Bengal	Treasury Buildings	ditto
5955	Sen, Netai Charan, BA	Assistant, Bengal Secretariat, Appointment Department	Writers' Buildings	ditto
5956	Sen, Nil Kamal	Accountant, D J Keymer & Co	4, Lyons Range	ditto
5957	Sen, Nilratan	Clerk, Imperial Bank of India	3, Strand Road	ditto
5958	Sen, Nirmal Krishna, BSC, BL	Assistant Head Master, Oriental Seminary	336, Upper Chitpore Road	ditto
5959	Sen, Nitya Gopal	Assistant, Reserve Bank of India	8, Council House Street	ditto
5960	Sen, Nripendra Nath	Clerk, Jardine, Skinner & Co	4, Clive Row	ditto
5961	Sen, O A V	Assistant, Gillanders, Arbuthnot & Co	8, Clive Street	Christian
5962	Sen, Panchanan	Stenographer, Lloyds Bank, Ld	101-1, Clive Street	Hindu
5963	Sen, Panchanan	Assistant, Commercial Intelligence Department, India	1, Council House Street	ditto
5964	Sen, Panchanan	Assistant, Accountant-General's Office, Bengal	Treasury Buildings	ditto
5965	Sen, Panchanan	Assistant, Bengal Secretariat, Police Department	Writers' Buildings	ditto
5966	Sen, Panchkari	Assistant, Bengal Secretariat, Political Department	Writers' Buildings	ditto

5967	Sen, Pashupati Nath, BA	Inspector, License Department, Calcutta Corporation	Municipal Office		ditto
5968	Sen, Prafulla Chandra	Clerk, Northern Assurance Co, Ld	7, Hare Street		ditto
5969	Sen, Prafullya Chandra	Jr Superintendent, Reserve, Bank	8, Council House Street		ditto
5970	Sen, Prafulla Kumar	Head Clerk, Mechanical Department, E B R	3, Koilaghat Street		ditto
5971	Sen, Prafulla Kumar	Clerk, Imperial Bank of India	3, Strand Road		ditto
5972	Sen, Prafulla Kumar	Clerk, Union Insurance Society of Canton, Ld	8, Clive Street		ditto
5973	Sen, Pransanker	Clerk, Telegraph Check Office	33, Dalhousie Square, South		ditto
5974	Sen, Pravas Ch, B A	Clark, Army Factory Accounts	6, Esplanade, East		ditto
5975	Sen, Priya Nath	Cashier, Anderson Wright & Co	22, Strand Road		ditto
5976	Sen, Purna Chandra	Journalist, *Statesman*, Ld	Statesman House		ditto
5977	Sen, Rajendra Nath, BA	Programme Assistant, All India Radio	1, Garstin Place		ditto
5978	Sen, Rajkumar, MSc	Professor, Vidyasagar College	39, Shankar Ghose Lane		ditto
5979	Sen, Ramesh Chandra	Assistant, Office of the Director of Public Instruction, Bengal	Writers' Buildings		ditto
5980	Sen, Ramesh Chandra	Assistant, Controller's Office, Calcutta University	Senate House		ditto
5981	Sen, Rash Behari	Cashier (Collection), Port Commissioners' Office	Strand Road		ditto
5982	Sen, R C	Assistant, Stewart & Co, Ld	57, Park Street		ditto
5983	Sen, Sati Prasad	Assistant, Mackinnon, Mackenzie & Co	16, Strand Road		ditto
5984	Sen, Satish Chandra	Sub-Head, Accounts Office, E B R	3, Koilaghat Street		ditto
5985	Sen, Satish Chandra	Clerk, Ralli Brothers, Ld	16, Hare Street		ditto
5986	Sen, Satish Chandra	Estimator, Calcutta Improvement Trust	5, Clive Street		ditto
5987	Sen, Satish Chandra	Assistant, Office of the Inspector-General of Police	Writers' Buildings		ditto

No.	Names.	Style or calling.	Residence or place of business.	Religion.
5988	Sen, Satish Chandra	Cashier, Commercial Union Assurance Co, Ld	32, Dalhousie Square	Hindu
5989	Sen, Satya Narayan	Clerk, Imperial Bank of India	3, Strand Road	ditto
5990	Sen, Sharat Chandra	Assistant, Bengal Legislative Council	Council House	ditto
5991	Sen, Shailendra Nath	Clerk, D A G P & T Office	7, Koilaghat Street	ditto
5992	Sen, Shailendra Nath	Assistant, Macneill & Co	2, Fairlie Place	ditto
5993	Sen, Shailendra Nath	Assistant, Andrew, Yule & Co, Ld	8, Clive Row	ditto
5994	Sen, Shailendra Nath	Assistant, Photo Litho office, Survey of India	14, Wood Street	ditto
5995	Sen, Shaileshwar, BA, BL	Assistant, Commercial Intelligence Deptt, India	1, Council House Street	ditto
5996	Sen, Shashi Kanta	Assistant, Bengal Chemical and Pharmaceutical Works, Ld	31, Chittaranjan Avenue, South	ditto
5997	Sen, Shyama Charan	Assistant, Bengal Secretariat, Irrigation Department	Writers' Buildings	ditto
5998	Sen, Shyam Sundar	Assistant, F W Heilgers & Co	1-1, Clive Street	ditto
5999	Sen, S K	Assistant, Balmer Lawrie & Co, Ld	103, Clive Street	ditto
6000	Sen, Subodh Chandra	Assistant, McLeod & Co	28, Dalhousie Square	ditto
6001	Sen, Subodh Chandra	Physical Instructor, Presidency College	86-1, College Street	ditto
6002	Sen, Sudhir Chandra	Assistant, Calcutta Improvement Trust	5, Clive Street	ditto
6003	Sen, Sukumar	Secretary, Great India Insurance, Ld	14, Clive Street	ditto
6004	Sen, Sunit Ch, BSc	Inspector, Collection Department, Calcutta Corporation	Municipal Office	ditto
6005	Sen, Surendra Nath	Assistant, Mackinnon, Mackenzie & Co	16, Strand Road	ditto
6006	Sen, Surendra Nath	Assistant, Accountant-General's Office, Bengal	Treasury Buildings	ditto

6007	Sen, Surendra Nath	Judicial Assistant, Presidency Commissioner's Office	3, Charnock Place	ditto
6008	Sen, Susar Kumar, B COM	Assistant, Accountant-General's Office, Bengal	Treasury Buildings	ditto
6009	Sen, Upendra Chandra	Treasurer, Port Commissioners' Office	Strand Road	ditto
6010	Sen, Upendra Lal	Treasurer, Grindlay & Co, Ld	6, Church Lane	ditto
6011	Sen, Upendra Nath, BA	Assistant, Accountant-General's Office, Bengal	Treasury Buildings	ditto
6012	Sen Gupta, A C	Chief Clerk, Medical Department, E B R	3, Koilaghat Street	ditto
6013	Sen Gupta, Abani Ranjan, BA, BT	Assistant Head Master, Hindu School	College Square	ditto
6014	Sen Gupta, Amiya Kumar	Assistant, Bengal Secretariat, L S-G Deptt	Writers' Buildings	ditto
6015	Sen Gupta, Anil	Prob. Asstt. Secretary, Port Commissioners' Office	Strand Road	ditto
6016	Sen Gupta, Benoyendra Prosad	Accountant, London and Lancashire Insurance Co, Ltd	2, Fairlie Place	ditto
6017	Sen Gupta, Bhabesh Nath	Clerk, D A G P & T Office	7, Koilaghat Street	ditto
6018	Sen Gupta, Bhupesh Chandra, BA	Clerk, Assessor's Department, Calcutta Corporation	Municipal Office	ditto
6019	Sen Gupta, Bijoy Kumar, BA	Assistant, Bengal Secretariat, Finance Department	Writers' Buildings	ditto
6020	Sen Gupta, Binoy Bhusan, BA	Assistant, Accountant-General's Office, Bengal	Treasury Buildings	ditto
6021	Sen Gupta, Binaya Krishna	Head Clerk, Timber Deptt, Jardine Skinner & Co	4, Clive Row	ditto
6022	Sen Gupta, Binode Lal	Traveller, Boots Pure Drug Co, Ld	10, Lal Bazar Street	ditto
6023	Sen Gupta, Birendra Nath, MA	Lecturer, Islamia College	8, Wellesley Street	ditto
6024	Sen Gupta, Bires Chandra, MA, BT	Assistant Master, Hindu School	College Square	ditto
6025	Sen Gupta, Chinta Haran, BL	Assistant, Indian Stores Department (Inspection)	6, Esplanade, East	ditto
6026	Sen Gupta, Debendra Nath, BA	Assessing Inspector, Calcutta Corporation	Municipal Office	ditto

No.	Names.	Style or calling.	Residence or place of business.	Religion.
6027	Sen Gupta, Debendra Nath	Clerk, Telegraph Check Office	33, Dalhousie Square, South	Hindu
6028	Sen Gupta, Dhirendra Lal	Assistant, Accountant-General's Office, Bengal	Treasury Buildings	ditto
6029	Sen Gupta, Dinesh Chandra, BSC	Clerk, Allahabad Bank, Ld	6, Royal Exchange Place	ditto
6030	Sen Gupta, D R	Estimator, Office of Superintending Engineer, S W Circle	Treasury Buildings	ditto
6031	Sen Gupta, Gopal Lal, BA	Assistant Master, Armenian College	39, Free School Street	ditto
6032	Sen Gupta, Girindra Nath	Building Inspector, Calcutta Corporation	Municipal Office	ditto
6033	Sen Gupta, Haripada	Salesman, Worthington-Simpson, Ld	10, Clive Street	ditto
6034	Sen Gupta, Hemkanta	Accountant, Standard Sanitary Agency, Ld	64, Bowbazar Street	ditto
6035	Sen Gupta, Jamini Kanta, MA	Teacher, Bangabasi College School	19, Scott Lane	ditto
6036	Sen Gupta, Jatindra Kumar, M A	Assistant, Accountant-General's Office, Bengal	Treasury Buildings	ditto
6037	Sen Gupta, Jatindra Kumar	Clerk, Secretary's Deptt, Port Commissioners' Office	Strand Road	ditto
6038	Sen Gupta, Jatindra Nath	Head Clerk, Land Acquisition Office	5, Bankshall Street	ditto
6039	Sen Gupta, Jnan Chandra	Clerk, D A G P & T Office	7, Koilaghat Street	ditto
6040	Sen Gupta, Jnanendra Prasanna, B A	Assistant, Accountant-General's Office, Bengal	Treasury Buildings	ditto
6041	Sen Gupta, Kali Charan, BA	Clerk, D A G P & T Office	7, Koilaghat Street	ditto
6042	Sen Gupta, Kartic Chandra	Assistant, Martin & Co	12, Mission Row	ditto
6043	Sen Gupta, Khosal Chandra	Assistant, Bengal Secretariat, Record Room	Writers' Buildings	ditto
6044	Sen Gupta, Kshitish Chandra	Assistant, Bengal Secretariat, Finance Department	Writers' Buildings	ditto
6045	Sen Gupta, Kunja Lal	Draftsman, No I Drawing Office, Survey of India	13, Wood Street	ditto
6046	Sen Gupta, Makhan Lal, BSC	Assistant, Accountant-General's Office, Bengal	Treasury Buildings	ditto
6047	Sen Gupta, Matilal	Clerk, Calcutta Improvement Trust	5, Clive Street	ditto
6048	Sen Gupta, Nalini Kanta	Assistant, James Finlay & Co, Ld	1, Clive Street	ditto

6049	Sen Gupta, Nalini Kanta	Assistant, Andrew Yule & Co, Ld	8, Clive Row	ditto
6050	Sen Gupta, Natabar	Clerk, Telegraph Check Office	33, Dalhousie Square, South	ditto
6051	Sen Gupta, Nishikanta, MA	Assistant, Calcutta University	Senate House	ditto
6052	Sen Gupta, N M	Assistant, Jessop & Co, Ld	93, Clive Street	ditto
6053	Sen Gupta, Nripendra Nath, I	Clerk, D A G P & T Office	7, Koilaghat Street	ditto
6054	Sen Gupta, Nripendra Nath, II	Clerk, D A G P & T Office	7, Koilaghat Street	ditto
6055	Sen Gupta, Panna Lal, B Sc.	S A S Clerk, Army Factory Accounts	6, Esplanade East	ditto
6056	Sen Gupta, Parimalhara	Building Inspector, Calcutta Corporation	Municipal Office	ditto
6057	Sen Gupta, Peary Mohan	Professor, Bangabasi College	25-1, Scott Lane	ditto
6058	Sen Gupta, Pramatha Ranjan	Clerk, Telegraph Check Office	33, Dalhousie Square, South	ditto
6059	Sen Gupta, Pratul Chandra, BSc	S A Superintendent, No. I Drawing Office, Survey of India	13, Wood Street	ditto
6060	Sen Gupta, Prem Ranjan	Assistant, Bird & Co	1-1, Clive Street	ditto
6061	Sen Gupta, Rabindra Kumar	Head Clerk, Begg Dunlop & Co, Ld	2, Hare Street	ditto
6062	Sen Gupta, Rajendra Nath, B L	Office Superintendent, The Bharat Insurance Co, Ld	Chittaranjan Avenue	ditto
6063	Sen Gupta, Sadhan Chandra	Clerk, Imperial Bank of India	3, Strand Road	ditto
6064	Sen Gupta, Saroj Kumar	Salesman, Commercial Credit Corporation, Ld	20, Park Street	ditto
6065	Sen Gupta, Satish Chandra	Head Clerk, (Shipping) Jardine, Skinner & Co	4, Clive Row	ditto
6066	Sen Gupta, Satyaranjan, MSc	Lecturer, Ripon College	24, Harrison Road	ditto
6067	Sen Gupta, S. B	Inspector, License Department, Calcutta Corporation	Municipal Office	ditto
6068	Sen Gupta, Shachindra Nath	Assistant, Accounts Department, Calcutta Corporation	Municipal Office	ditto
6069	Sen Gupta, Shachindra Nath	Building Inspector, Calcutta Corporation	Municipal Office	ditto
6070	Sen Gupta, Shailendra Kumar	Assistant, Income-tax Office	Imperial Secretariat Buildings	ditto

No.	Names.	Style or calling.	Residence or place of business.	Religion.
6071	Sen Gupta, Shishir Kumar	Stenographer, C E's Office, E I R	E I R House	Hindu
6072	Sen Gupta, S N	Assistant, Guest, Keen, Williams, Ld	7, Council House Street	ditto
6073	Sen Gupta, Sudodh Ch	Clerk, C A O's Office, E I R	E I R House	ditto
6074	Sen Gupta, Subodh Kumar	Assistant, Phoenix Assurance Co, Ld	28, Dalhousie Square	ditto
6075	Sen Gupta, Surendra Chandra	Assistant, Surgeon-General's Office, Bengal	Writers' Buildings	ditto
6076	Sen Gupta, Sushil Kumar	Stenographer, Imperial Chemical Industries (India), Ld	18, Strand Road	ditto
6077	Sen Gupta, Tarak Nath, BSC	Assistant Analyst, Bengal Public Health Laboratory	Chittaranjan Avenue	ditto
6078	Sen Gupta, Upendra Nath	Clerk, C A O's Office, E I R	E I R House	ditto
6079	Sen Ray, Tarit Bihari, B COM	Examiner of Accounts, Income-tax Office	3, Government Place, West	ditto
6080	Seshan, T S	Clerk, I G N & Ry Co, Ltd	4, Fairlie Place	ditto
6081	Seshiah, Subbavenkatarama	Clerk, Office of H M's Senior Trade Commissioner in India	4, Fairlie Place	ditto
6082	Sett, Bishwanath	Assistant, Reserve Bank of India	8, Council House Street	ditto
6083	Sett, Dhananjay	Clerk, Telegraph Check Office	33, Dalhousie Square, South	ditto
6084	Sett, Mahesh Das	Clerk, Accounts Deptt, Allahabad Bank, Ld	6, Royal Exchange Place	ditto
6085	Sett, Mukunda Lal	Assistant, Accountant-General's Office, Bengal	Treasury Buildings	ditto
6086	Sett, Atul Krishna	Divisional Accountant, A-G B's Office	Treasury Buildings	ditto
6087	Sett, Baidyanath	Clerk, D A G P & T Office	7, Koilaghat Street	ditto
6088	Sett, Baidya Nath	Assistant, Accountant-General's Office, Bengal	Treasury Buildings	ditto
6089	Shafi, Mahomed, MA, BT	Assistant Master, Calcutta Madrasah	19, Wellesley Square	Mahomedan
6090	Shafi, Mahomed	Examiner of Stores, Indian Stores Department (Inspection)	6, Esplanade, East	ditto

6091	Shariff, Shamsuddin, BL	Examiner of Accounts, Income-tax Office	6, Esplanade, East	ditto
6092	Sharma, Baburam	Overseer, Calcutta Improvement Trust	5, Clive Street	Hindu
6093	Sharma, Chiranjilal	Salesman, Greaves Cotton & Co, Ld	60, Dharamtala Street	ditto
6094	Sharma, Kishori Kanta, MA	Lecturer, Vidyasagar College	39, Shankar Ghose Lane	ditto
6095	Sharma, N Ramnath	Bridge Inspector, C E's Office, E I R	E I R House	ditto
6096	Shashital, Hem Chandra Dattatraya	Engineer, English Electric Co, Ltd	D-4, Clive Buildings	ditto
6097	Shiva, Behari Lal	Assistant, Martin & Co	12, Mission Row	ditto
6098	Shome, Bhuban Mohan	Assistant, Bird & Co	1-1, Clive Street	ditto
6099	Shome, Birendra Kumar	Clerk, D A G P & T Office	7, Koilaghat Street	ditto
6100	Shome, Debendra Nath, MA	Accountant, Central Bank of India, Ld	133, Cornwallis Street	ditto
6101	Shome, Joy Gopal	Assistant, Accountant-General's Office, Bengal	Treasury Buildings	Christian
6102	Shome, Lalit Mohan	Clerk, Photo-Litho Branch, Surveyor-General's Office	14, Wood Street	Hindu
6103	Shome, Lalit Mohan, BSC	Cons Overseer, Calcutta Corporation, District II	22, Mirzapore Street	ditto
6104	Shome, Lalit Mohan	Clerk, Office of Superintending Engineer, Presy Circle	Writers' Buildings	ditto
6105	Shome, Nalini Prasanna	Clerk, Jardine, Skinner & Co	4, Clive Row	ditto
6106	Shome, Purna Chandra	Assistant, Accountant-General's Office, Bengal	Treasury Buildings	ditto
6107	Shome, Satcourie	Mg Director, Advance Engineering Works, Ld	Mercantile Buildings	ditto
6108	Shome, S N	Clerk, Calcutta Mint	47, Strand Road	ditto
6109	Siddhanta, Ramkanai, BA	Assistant, Bengal Secretariat, Police Dept	Writers' Buildings	ditto

No.	Names.	Style or calling.	Residence or place of business.	Religion.
6110	Siddique, Fazlur Rahman, BA, BT	Assistant Master, Calcutta Training School	8, European Asylum Lane	Mahomedan
6111	Siddique, Md Abdus Samad Quamer, BA.	Urdu Master, La Martiniere	11, Loudon Street	ditto
6112	Siddique, S M Nizamuddin, BA	Clerk, D A G P & T Office	7, Koilaghat Street	ditto
6113	Singh, Badan	Clerk, Burmah Shell Co of India, Ld	Hongkong House	Hindu
6114	Singh, Jainath	Head Clerk, Burra Bazar Branch, Allahabad Bank, Ld	6, Royal Exchange Place	ditto
6115	Singh, J N	Clerk, C E S C, Ld	Victoria House	ditto
6116	Singh, Kalika	Clerk, Allahabad Bank, Ld	6, Royal Exchange Place	ditto
6117	Singh, Pran	Claims Inspector, E B R	3, Koilaghat Street	ditto
6118	Singh, Sripal	Assistant, Allahabad Bank, Ld	6, Royal Exchange Place	ditto
6119	Singh, Sudarsan	Clerk, D A G P & T Office	7, Koilaghat Street	ditto
6120	Singh, Umrao	Assistant, Martin & Co	12, Mission Row	ditto
6121	Sinha, Ajit Kumar	Assistant, Calcutta University	Senate House	ditto
6122	Sinha, Amulya Kumar	Assistant, Bengal Secretariat, L S-G Department	Writers' Buildings	ditto
6123	Sinha, Basanta Narayan	Assistant, National Insurance Co, Ltd	7, Council House Street	ditto
6124	Sinha, Bhujendra Nath	Clerk, Landale & Clark, Ld	11, Clive Street	ditto
6125	Sinha, Biman Bhusan	Regtd Accountant, George Read & Co	Avenue House, Chowringhee Square	ditto
6126	Sinha, Chandi Charan	Examiner of Stores, Indian Stores Department (Inspection)	6, Esplanade, East	ditto
6127	Sinha, Charu Chandra	Clerk, Burmah Shell Co of India, Ld	Hongkong House	ditto
6128	Sinha, Dasarathi	Clerk, D A G P & T Office	7, Koilaghat Street	ditto

6129	Sinha, Debipada	Clerk, Ralli Bros, Ld	16, Hare Street	ditto
6130	Sinha, Durga Charan, MA (COM)	Assistant, Accounts Deptt, Dist III, Calcutta Corporation	Hogg Street	ditto
6131	Sinha, Dwijendra Nath, BL	Assistant, Accountant-General's Office, Bengal	Treasury Buildings	ditto
6132	Sinha, Gopeshwar, MSc	Head Bill Clerk, Assessor's Department, Calcutta Corporation	Municipal Office	ditto
6133	Sinha, Gopi Ballav BA	Clerk, D A G P & T Office	7, Koilaghat Street	ditto
6134	Sinha, Haridas	Offg Accountant, Telegraph Check Office	33, Dalhousie Square, South	ditto
6135	Sinha, Jatindra Mohan	Assistant, Burn & Co, Ld	12, Misson Row	ditto
6136	Sinha, Jatindra Nath	Assistant, J Thomas & Co	8, Mission Row	ditto
6137	Sinha, Jatindra Nath	Head Clerk (Share), Jardine, Skinner & Co	4, Clive Row	ditto
6138	Sinha, Jatindra Nath, MSc	Professor, Vidyasagar College	39, Shankar Ghose Lane	ditto
6139	Sinha, Jnanendra Nath	Salesman, Corn Products Co (India), Ld	4, Lyons Range	ditto
6140	Sinha, Kashi Nath	Accounts Clerk, E B R	3, Koilaghat Street	ditto
6141	Sinha, Khagendra Nath	Assistant, Greaves Cotton & Co, Ld	60, Dharamtala Street	ditto
6142	Sinha, Kshetra Nath	Assistant, Accountant-General's Office, Bengal	Treasury Buildings	ditto
6143	Sinha, Lalit Mohan, MA, BT	Assistant Master, Hare School	87, College Street	ditto
6144	Sinha, Mahendra Nath, BA	Assistant, Commercial Intelligence Deptt	1, Council House Street	ditto
6145	Sinha, Manindra Nath	Clerk, D A G P & T Office	7, Koilaghat Street	ditto
6146	Sinha, Manmatha Nath	Assistant, Calcutta University	Senate House	ditto

No.	Names.	Style or calling.	Residence or place of business.	Religion.
6147	Sinha, Manoj Mohan ..	.. Clerk, Traffic Deptt, E B R	.. 3, Koilaghat Street ..	.. Hindu
6148	Sinha, Narendra Nath ..	.. Assistant, Excise Commissioner's Office, Bengal ..	.. Writers' Buildings ..	.. ditto
6149	Sinha, Netai Krishna ..	.. Clerk, D A G P & T Office	.. 7, Koilaghat Street ..	.. ditto
6150	Sinha, Nirmal Kumar, BA	.. Assistant, Accountant-General's Office, Bengal ..	.. Treasury Buildings —	.. ditto
6151	Sinha, Panchu Gopal ..	.. Examiner of Stores, Indian Stores Department (Inspection)	.. 6, Esplanade, East ..	.. ditto
6152	Sinha, Pins Christy ..	.. Clerk, C O P S Office, E I R	.. E I R House	.. Christian
6153	Sinha, Sarashi Mohan ..	.. Clerk, D A G P & T Office	.. 7, Koilaghat Street ..	.. Hindu
6154	Sinha, Satish Chandra ..	.. Clerk, C Elec E's Office, E I R	.. E I R House ..	.. ditto
6155	Sinha, Satish Chandra ..	.. Head Designer, Govt School of Art	.. 28, Chowringhee ..	.. ditto
6156	Sinha, Shachindra Nath	.. Audit Clerk, Ray & Ray	.. 6, Church Lane ..	.. ditto
6157	Sinha, Shailendra Nath ..	.. Assistant, Calcutta University	.. Senate House ..	.. ditto
6158	Sinha, Shailendra Nath ..	.. Clerk, Factory Inspection Department, Bengal ..	.. 40-1A, Free School Street	.. ditto
6159	Sinha, Sharat Chandra ..	.. Clerk, Marine Deptt, South British Insurance Co, Ld ..	.. 5, Clive Street ..	.. ditto
6160	Sinha, Subodh Chandra	.. Assistant, Bengal Secretariat, Finance Department ..	.. Writers' Buildings ..	.. ditto
6161	Sinha, Surendra Prasad ..	.. Assistant, Andrew, Yule & Co, Ld	.. 8, Clive Row	.. ditto
6162	Sinha, Suresh Chandra, MA	.. Assistant, Legislative Department, Bengal ..	.. Council House ..	.. ditto
6163	Sinha, Sushil Ch ..	.. Clerk, Telegraph Check Office	.. 33, Dalhousie Square, South	.. ditto

6164	Sinha, S S (Dr), M B	Food Inspector, Calcutta Corporation (D IV)	4, Ray Bagan Street	ditto
6165	Sinha, Tarapada, BA	Assistant, Agri and Inds Department, Bengal	Writers' Buildings	ditto
6166	Sinha, Upendra Nath	Head Clerk, North British & Mercantile Insurance Co, Ld	101-1, Clive Street	ditto
6167	Sinha Ray, Nirmal Prasad	Assistant, Income-tax Office	3, Government Place, West	ditto
6168	Sinha Ray, Satish Ch	Clerk, C E S C, Ld	Victoria House	ditto
6169	Siromani, Vethamuthu Gnanayudham	Assistant Secretary, National Council, Y M C A	5, Russell Street	ditto
6170	Solaiman, Mahomed (Maulvi)	Assistant, Bengal Secretariat, Political Deptt	Writers' Buildings	Mahomedan
6171	Srikantaiya, S	Supervisor, Central Bank of India, Ld	71, Cross Street	Hindu
6172	Srimani, Shailendra Nath	Bill Clerk, Geo Henderson & Co, Ld	101-1, Clive Street	ditto
6173	Srinivasam, P N	Assistant, Jessop & Co, Ld	93, Clive Street	ditto
6174	Srinivasan, P	Clerk, D A G P & T Office	7, Koilaghat Street	ditto
6175	Subhan, Golam	Head Clerk, Income-tax Office	1, Hare Street	Mahomedan
6176	Subhan, M A	Assistant, Mackinnon Mackenzie & Co	16, Strand Road	ditto
6177	Subram, Anantaram, B com	Head Clerk, Jost's Engineering Co, Ld	9B, Mercantile Buildings	Hindu
6178	Subramaney, R	Clerk, Shaw, Wallace & Co	4, Bankshall Street	ditto
6179	Subramaniam, Keshayaiyer	Stenographer, South British Insurance Co, Ld	5, Clive Street	ditto
6180	Subramaniam, K S	Clerk, Dunlop Rubber Co (India), Ltd	42, Free School Street	ditto
6181	Subramanian, Gopala Bala	Jr Superintendent, Reserve Bank	8, Council House Street	ditto
6182	Subramanian, H V	Assistant, Brooke Bond India, Ld	2, Metcalfe Street	ditto

No.	Names.	Style or calling.	Residence or place of business.	Religion.
6183	Subramanian, P S	Audit Inspector, Port Commissioners' Office	Strand Road	Hindu
6184	Subramanian, Ramadurai, MA	Junior Auditor, E B R	3, Koilaghat Street	ditto
6185	Suchak, V M	Canvasser, Imperial Chemical Industries (India), Ld	18, Strand Road	ditto
6186	Sud, Lakshmi Narayan	Clerk, Allahabad Bank, Ld	6, Royal Exchange Place	ditto
6187	Sukla, Bhupatlal Amritlal	Assistant, Jeewanlal (1929), Ltd	101, Clive Street	ditto
6188	Sukla, Loknath	Assistant, Allahabad Bank, Ld	6, Royal Exchange Place	ditto
6189	Sukla, Satya Narayan	Clerk, Allahabad Bank, Ld	6, Royal Exchange Place	ditto
6190	Shukla, Shyama Charan	Clerk, Accounts Department, Allahabad Bank, Ld	6, Royal Exchange Place	ditto
6191	Sukla, Shyam Narayan	Chief Clerk, (D A) O's Office, E I R	E I R House	ditto
6192	Sur, A L	Assistant Accounts Officer, E I R	E I R House	ditto
6193	Sur, Bijaya Krishna	Clerk, Imperial Bank of India	3, Strand Road	ditto
6194	Sur, Bipin Bihari, BA	Assistant, Education Department, Bengal Secretariat	Writers' Buildings	ditto
6195	Sur, Gour Chandra	Clerk, Calcutta Improvement Trust	5, Clive Street	ditto
6196	Sur, Jahar Lal	Assistant Accountant, Imperial Bank of India, Clive Street Branch	8, Clive Street	ditto
6197	Sur, Jyotiprasad	Clerk, C A O's Office, E I R	E I R House	ditto
6198	Sur, Manicklal	Clerk, Imperial Bank of India	3, Strand Road	ditto
6199	Sur, Nandalal	Clerk, C O P S Office, E I R	E I R House	ditto

6200	Sur, Panchu Gopal	Clerk, Imperial Bank of India	3, Strand Road		ditto
6201	Sur, Rajani Kanta	Assistant, Central Forms Store	166, Dharamtala Street		ditto
6202	Sur, Sachidananda	Clerk, Central Registry, E I R	E I R House		ditto
6203	Sur, Satish Chandra	Clerk, Central Registry, E I R	E I R House		ditto
6204	Sur, Satya Prasanna	Assistant, Bird & Co	1-1, Clive Street		ditto
6205	Sur, S M	Assistant, Oriental Government Security Life Assurance Co, Ld	2, Clive Row		ditto
6206	Sutradhar, Pranballabh, BA	Accountant, Office of the Dy Director of Agriculture, Western Circle.	Writers' Buildings		ditto
6207	Swami Ramchandra Yagna	Assistant, Nestle & Anglo-Swiss Condensed Milk (Export) Co, Ld	9A, Clive Street		ditto
6208	Swami, V M	Assistant Accountant, Remington Rand Inc	3, Council House Street		ditto
6209	Swaminathan, G K	Assistant, Thos Cook & Son, Ld	4, Dalhousie Square		ditto
6210	Swaminathan, Kandadi Subramania	Assistant, Govan Bros, Ld	20, Park Street		ditto
6211	Swaminathan, T S	Asstt, National Insurance Co, Ld	7, Council House Street		ditto
6212	Swaminathan Viswanathan	Clerk, Grindlay & Co Ld	6, Church Lane		ditto
6213	Syed Karimuzzaman, B COM	Clerk, License Department, Calcutta Corporation	Municipal Office		Mahomedan

T

6214	Talapatra, Atul Chandra	Assistant Accountant, P H D, Bengal	3, Charnock Place		Hindu
6215	Talati, Bejon B, B COM	Internal Auditor, Central Bank of India, Ld	100, Clive Street		Zoroastrian
6216	Talati, Dassabhai Dalji	Assistant, Ralli Bros, Ld	16, Hare Street		ditto
6217	Talati, E P	Accountant, Adamjee Hajee Dawood & Co, Ld	5, Dalhousie Square, East		ditto
6218	Talukdar, A H	Assistant, Meyer & Co	6-3, Lindsay Street		Hindu

No.	Names.	Style or calling.	Residence or place of business.	Religion.
6219	Talukdar, Ishaq Ali, BA ..	Examiner of Accounts, Income-tax Office	1, Hare Street	Mahomedan
6220	Talukdar, Jogendra Lal ..	Assistant, Commercial Intelligence Deptt, India	1, Council House Street	Hindu
6221	Talukdar, Pramatha Nath, BL	Assistant, Accountant-General's Office, Bengal	Treasury Buildings	ditto
6222	Tandon, B N	Chief Clerk. Dy Agent's Office, E I R	E I R House	ditto
6223	Tandon, Shyam Sundar ..	Clerk, Allahabad Bank, Ld	6, Royal Exchange Place	ditto
6224	Tara, M R	Assistant, Grahams Trading Co (India), Ld	6, Lyons Range	Zoroastrian
6225	Tarafdar, Shyamapada, BSC	Assistant, Bengal Secretariat, Judicial Department	Writers' Buildings	Hindu
6226	Tayab, Abu, MA	Inspector Surveyor, Income-tax Office	3, Government Place, West	Mahomedan
6227	Tayal, Sital Prasad, MA	Asstt. in charge, Coal Deptt, K C Thapar & Bros, Ld	5, Royal Exchange Place	Hindu
6228	Tewari, Shyam Sunder	Clerk, Allahabad Bank, Ltd	6, Royal Exchange Place	ditto
6229	Thapar, Ved Prakash, BA	Asstt in charge, Stores and Supply Deptt, K C Thapar & Bros, Ld	5, Royal Exchange Place	ditto
6230	Thiagerajan, Sankernarayan	Clerk, Burmah Shell Co of India, Ld	Hongkong House	ditto
6231	Tosh, Kalipada	Clerk, Marine Department, South British Insurance Co, Ld	5, Clive Street	ditto
6232	Trikha, S N	Assistant, Jessop & Co, Ld	93, Clive Street	ditto
6233	Tripati, Beni Shankar	Clerk, C A O's Office, E I R	E I R House	ditto
6234	Trivedi, Krishnapada	Assistant, Accounts Department, Calcutta Corporation	Municipal Office	ditto

U

6235	Uddin, Yar, M A	Examiner of Accounts, Income-tax Office	1, Hare Street	Mahomedan
6236	Udeshi, Dwarkadas Vithaldas	Salesman, Greaves Cotton & Co, Ld	60, Dharamtala Street	Hindu

V

6237	Valluri, S R	Examiner of Stores, Indian Stores Deptt	6, Esplanade East	Hindu
6238	Vanchinathan, R	Assistant Electrical Engineer, E I R	E I R House	ditto
6239	Varadhachari, S	Stenographer, Macmillan & Co, Ld	294, Bowbazar Street	ditto
6240	Varma, Puttan Lal	Clerk, C A O's Office, E I R	E I R House	ditto
6241	Venkataram, M S B A	Museum Assistant, Geological Survey of India	27, Chowringhee	ditto
6242	Venkatesan M Swarma, BA	Accountant, All Indian Radio	1, Garstin Place	ditto
6243	Venkateswar, Ayakad Krishna	Stenographer, Tata Iron and Steel Co, Ld	100, Clive Street	ditto
6244	Venugopalam, K	Assistant, Sun Life of Canada	12, Dalhousie Square, East	ditto
6245	Vidyaratna, Bhababhuti	Assistant Master, Sanskrit Collegiate School	College Square	ditto
6246	Vishwanatham, K S	Assistant, Lionel Edwards, Ld	D-1, Clive Buildings	ditto

No.	Names.	Style or calling.	Residence or place or business.	Religion.
	V			
6247	Vora, P T	Assistant Accountant, Central Bank of India, Ld	71, Cross Street	Jain
6248	Vyas, V N	Accountant, Adamjee Hajee Dawood & Co, Ld	5, Dalhousie Square, East	Hindu
	W			
6249	Wadud, Abdul (Maulvi) M A	District Inspector of Schools, Calcutta	40-1A, Free School Street	Mahomedan
6250	Wahab, Abul Mukarem Fazlul	Librarian, Calcutta Madrassah	19, Wellesley Square	ditto
	Y			
6251	Yunnus, Mahomed	Assistant, Income-tax Office	1, Hare Street	Mahomedan
6252	Yusuff, Abul Faiz Mahmud, BA	Assistant, Bengal Secretariat, Finance Deptt	Writers' Buildings	ditto
6253	Yusuff, Md	Clerk, D A G P & T Office	7, Koilaghat Street	ditto
	Z			
6254	Zahiruddin	Sub-Head, C A O's Office, E I R	E I R House	Mahomedan
6255	Zain-ul-Abedin	Assistant, Office of the Director of Industries, Bengal	40-1A, Free School Street	ditto
6256	Zaman, Syed-uz	Chief Assistant, C O S Office, E I R	E I R House	ditto

O. MOSES,
Clerk of the Crown.

Special Jury List

List of persons liable to serve on Special Juries in the High Court of Judicature at Fort William in Bengal for the year ensuing from 1st May 1937 pursuant to Act V of 1898.

Remarks.—Errors in names and descriptions can be corrected on communication to the office of the Clerk of the Crown Persons claiming exemptions should communicate their claims and grounds thereof to the Clerk of the Crown as soon as possible after service of summons, and persons summoned and unable to attend for any cause should state such cause, so that if sufficient cause is shown, the sheriff may be directed to summon other Jurymen

No	Names	Style or calling	Residence or place of business.	Religion.
	A			
1	Abraham, P G	Member, National Council, Y M C A	5, Russell Street	Christian
2	Acheson, Frederick William	Technical Assistant, C E S C, Ld	Victoria House	ditto
3	Acton, E	Director, Acton, Ld	D-5, Clive Buildings	ditto
4	Acton, K M	Director, Acton, Ld	D-5, Clive Buildings	ditto
5	Adam, Harry (M.G.)	Managing Director, Paterson Engineering Co (India), Ld	2, Dalhousie Square	ditto
6	Adcock, W H	Assistant Sales Manager, G E C (India), Ld	Magnet House, Central Avenue South	ditto
7	Affleck, A K	Director, H Hobbs & Co, Ld	9, Old Court House Street	ditto
8	Ahern, P J	Engineer, Martin & Co	12, Mission Row	ditto
9	Aiman, J S	General Secretary, National Council, Y M C A	5, Russell Street	ditto
10	Ainscough, J P	Assistant, Shaw, Wallace & Co	4, Bankshall Street	ditto
11	Ainslie, Kenneth	Assistant, F W Heilgers & Co	1-1, Clive Street	ditto
12	Aitken, James	Manager, James, Finlay & Co, Ld	1, Clive Street	ditto
13	Alcock, R	Assistant, W J Alcock & Co	7, Hastings Street	ditto

No.	Names.	Style or calling.	Residence or place of business	Religion.
14	Alcock, Robert J	Assistant, Balmer, Lawrie & Co, Ld	103, Clive Street	Christian
15	Alcock, W J	Consulting and Chemical Engineer	7, Hastings Street	ditto
16	Alexander, V G	Secretary, Motor Union Insurance Co, Ld	1 & 2, Old Court House Corner	ditto
17	Alexandroff, Alexander John	Assistant, Ralli Bros, Ld	16, Hare Street	ditto
18	Alford, R S M	Assistant, Lipton, Ld	9, Weston Street	ditto
19	Allan, T T K	Manager, National Bank of India, Ld	104, Clive Street	ditto
20	Allen, C H	Secretary, Sun Life of Canada	12, Dalhousie Square, East	ditto
21	Allen, Geoffrey Lea	Director, Shimwell Bros (Cal.), Ld	1-1, Clive Street	ditto
22	Allen, W	Assistant, Mackinnon, Mackenzie & Co	16, Strand Road	ditto
23	Allison, John Laurence	Assistant, London & Lancashire Insurance Co, Ld	2, Fairlie Place	ditto
24	Alliston, L H	Director, L H Alliston & Co, Ld	B-5, Clive Buildings	ditto
25	Alliston, M E	Director, L H Alliston & Co, Ld	B-5, Clive Buildings	ditto
26	Alloway, Herbert Essex	Manager, Supply Department, Imperial Tobacco Co of India, Ld	37, Chowringhee	ditto
27	Amsden, B F	Director, Ingersoll Rand (India), Ld	15, Clive Street	ditto
28	Anastasiadi, John Pelopidas	Assistant, Ralli Brothers, Ld	16, Hare Street	ditto
29	Anderson, Allan	Assistant, Hoare, Miller & Co, Ld	5, Fairlie Place	ditto
30	Anderson, D Y	Traffic Manager & Secretary, Baraset-Basirhat Light Ry. (Martin & Co.)	12, Mission Row	ditto
31	Anderson, J W J	Assistant, Burn & Co, Ld	12, Mission Row	ditto
32	Anderson, Mills Finlay	Accountant, Martin & Co	12, Mission Row	ditto

33	Anderson, W	Governing Director, Hall & Anderson, Ld	31, Chowringhee	ditto
34	Andrews, P. T.	Assistant (2nd Grade), Imperial Bank of India	Strand Road	ditto
35	Anstey, B A	Manager for India, Scottish Union & National Insurance Co.	6, Lyons Range	ditto
36	Anthony, L	Resident	16, Theatre Road	ditto
37	Antrobus, Hinson Allan	Director, Begg, Dunlop & Co, Ld	2, Hare Street	ditto
38	Apcar, J M	Merchant	18, Park Lane	ditto
39	Apostoldides, Michael Demosthenes	Assistant, Ralli Bros, Ld	16, Hare Street	ditto
40	Arakie, A	Merchant	6, Pretoria Street	Jew
41	Arakie, H	Merchant	1, Rawdon Street	ditto
42	Arakie, Mordi	Merchant	6, Pretoria Street	ditto
43	Archer, C W	Assistant, Jardine, Skinner & Co	4, Clive Row	ditto
44	Armour, R	Managing Director, R K O Radio Pictures, Ld	Tower House	Christian
45	Armstrong, W L	Director, Villiers, Ld	F-3, Clive Buildings	ditto
46	Arnold, Kenneth Noss	Engineer, Martin & Co	12, Mission Row	ditto
47	Arnott, John Dickson	Assistant, Allahabad Bank, Ld	6, Royal Exchange Place	ditto
48	Arratoon, G A	Partner, Arratoon & Co, Ld	5, Dalhousie Square, East	ditto
49	Arthern, M	Managing Director, Winter Bros	Mercantile Buildings	ditto
50	Arthur, Lucas William Fleming	Agent, Imperial Bank of India	Russell Street	ditto
51	Arthur, R S	Assistant, Lovelock & Lewes	4, Lyons Range	ditto
52	Ashmore, Fred	Assistant Engineer, Inspection, Indian Stores Department	6, Esplanade East	ditto

No.	Names.	Style or calling.	Residence or place of business.	Religion.
53	Ashton, H	.. Manager, Chhajuram & Sons	.. 100, Clive Street	Christian
54	Atkinson, Lawrence Patrick	.. Actg Editor, Star of India	.. 3, Wellesley Place	ditto
55	Austin, George John ..	.. Director, J B Norton & Sons, Ld	.. Norton Buildings	ditto
	B			
56	Baggs, James Patrick ..	.. Assistant, Gillanders, Arbuthnot & Co	.. 8, Clive Street	Christian.
57	Bagley, F R ..	.. Secretary, Brooke Bond, India, Ld	.. 2, Metcalfe Street	ditto
58	Bagnall, John F ..	.. Assistant, Macneill & Co	.. 2, Fairlie Place	ditto
59	Baikie, H M ..	.. P A to Chief Engineer, E B R	.. 3, Koilaghat Street	ditto
60	Bailey, John Arthur, AIAA	.. Assistant, Martin & Co	.. 12, Mission Row	ditto
61	Bailey, W E ..	.. Sr Assistant, Shaw, Wallace & Co ..	.. 4, Bankshall Street	ditto
62	Baird, W D ..	.. Assistant, Reed Ward & Co	.. 6, Lyons Range	ditto
63	Baker, Reginald George	.. Director, Imperial Tobacco Co of India, Ld ..	.. 37, Chowringhee	ditto
64	Baker, R J ..	.. Manager, Sun Life of Canada	.. 12, Dalhousie Square, East ..	ditto
65	Ballance, Charles ..	.. General Manager, Paramount Films, Ld Inc. ..	.. 170, Dharamtala Street	ditto
66	Ballantyne, Herbert Samuel Binning	Mains Engineer, C E S C, Ld	.. Victoria House	ditto
67	Bance, Arthur Frederick	.. Company Secretary, W. Billinton & Co, Ld ..	.. Stephen House	ditto
68	Bannerman, Henry Campbell	.. Assistant, Macneill & Co	.. 2, Fairlie Place	ditto
69	Bannett, N C W	.. Asstt. Commercial Manager, E I R	.. E I R House	ditto
70	Barber, Herbert Eustace	.. Partner, Talbot & Co	.. Tower House, Chowringhee Square ..	ditto

71	Barling, Francis Gilbert Bonner	Assistant Manager, Mulcolt Belting Co, Ld	10, Government Place, East	ditto
72	Barnes, O J	Agent, Hongkong & Shanghai Banking Corporation	Hongkong House	ditto
73	Baron, C G	Dist Traffic Supdt, E B R	3, Koilaghat Street	ditto
74	Barrett, Harold	Manager, Houghton, Butcher (Eastern), Ld	10, Hungerford Street	ditto
75	Barron, H	Dist Engineer, E I R	E I R House	ditto
76	Barron, S	Assistant, Arlington & Co	13-3, Old Court House Street	ditto
77	Bartholomew, G	Chartered and Consulting Engineer	7, Old Court House Street	ditto
78	Bartlett, J R H	Managing Director, R V Briggs & Co, Ld	8-B, Lall Bazar Street	ditto
79	Bartley, M E	Assistant Traffic Superintendent, E B R	3, Koilaghat Street	ditto
80	Bartley, W Coppen	Secretary, Aluminium Manufacturing Co. Ld	9, Clive Street	ditto
81	Bash, L G	Director, Jeewanlal (1929), Ld	101, Clive Street	ditto
82	Basil, D A	Proprietor, Electric Stores and Engineering Co	13A, Russell Street	ditto
83	Basil, S A	Partner, Talbot & Co	Tower House, Chowringhee Square	ditto
84	Batchelor, G F F	Partner, James Luke & Sons	7, Royal Exchange Place	ditto
85	Bateman, Hugh Fiez Herbert	Partner, Shaw, Wallace & Co	4, Bankshall Street	ditto
86	Bates, Percy	Assistant, Kilburn & Co	4, Fairlie Place	ditto
87	Bateson, Isaac	Assistant Manager, Indian School Supply Depot	Chittaranjan Avenue, South	ditto
88	Bateson, James Dingwall Mayhew	Assistant, Gillanders, Arbuthnot & Co	8, Clive Street	ditto
89	Battey, Wilfred Bruce Kenyon	Assistant, Battey and Kemp	9, Ezra Mansions	ditto
90	Batte ·, Wilfred Kenyon	Proprietor, Battey & Kem	9, Ezra Mansions	ditto

No.	Names	Style or calling	Residence or place of business.	Religion.
91	Battle, Frank	Bank Manager, Thos Cook & Son, Ld.	4, Dalhousie Square	Christian
92	Batty, Walter Henry	Partner, W S Cresswell & Co	3, Clive Row	ditto
93	Baxter, C W	Director, Halley Brothers, Ld	135, Canning Street	ditto
94	Baxter, T N	Insurance Assistant, New Zealand Insurance Co, Ld	26, Dalhousie Square	ditto
95	Baylis, R W	Managing Director, C & E Morton (India), Ld	11, Clive Street	ditto
96	Beatt, D H	Assistant, Mackinnon, Mackenzie & Co	16, Strand Road	ditto
97	Behrend, S W E	Assistant, Imperial Chemical Industries (India), Ld	18, Strand Road	ditto
98	Bell, C C C	Assistant, James, Finlay & Co, Ld	1, Clive Street	ditto
99	Bell, Ralph Lane	Director, Imperial Tobacco Co of India, Ld	37, Chowringhee	ditto
100	Benjamin, J A	Partner, Innes, Watson & Co	15, Clive Row	Jew
101	Bennett, H K	Head Engineer, Calcutta Mint	47, Strand Road	Christian
102	Benson, George	Manager, David, Sassoon & Co, Ld	4, Lyons Range	ditto
103	Bent, William	Managing Director, Callender's Cable & Construction Co, Ld	54, Ezra Street	ditto
104	Benthall, A P	Assistant, Bird & Co	1-1, Clive Street	ditto
105	Benthall, E C (Sir)	Partner, Bird & Co	1-1, Clive Street	ditto
106	Bentley, Harold	General Manager, Keymer, Bagshawe & Co, Ld	4, Lyons Range	ditto
107	Benwell, William Sydney	Accountant, Duncan Brothers & Co, Ld	101, Clive Street	ditto
108	Berry, W E	Assistant Secretary, Scottish Union & National Insurance Co	6, Lyons Range	ditto
109	Berthoud Ernest Alfred	Partner, Berthoud & Co	6, Royal Exchange Place	ditto

110	Berthoud, George Felix	Partner, Berthoud & Co	6, Royal Exchange Place	ditto
111	Bett, A M	Assistant, Jute Industries, Ld	1A, Hare Street	ditto
112	Biggar, Allan	Assistant, F W Heilgers & Co	1-1, Clive Street	ditto
113	Biggs, W J	Chief Accountant, G E C (India), Ld	Magnet House, Chittaranjan Avenue South.	ditto
114	Bilton, Norman Cooper	Chief Engineer, Bengal Telephone Corporation, Ld	8, Hare Street	ditto
115	Binning, Harold Angus	Partner, Thos Seth Apcar & Co	F-1, Clive Buildings	ditto
116	Bird, Charles William	Engineer, Alfred, Herbert (India), Ld	13-3, Strand Road	ditto
117	Bird, J A G	Assistant, Shaw, Wallace & Co	4, Bankshall Street	ditto
118	Bird, N C	Freight Superintendent, India Genl. Navgn. & Ry Co, Ld	4, Fairlie Place	ditto
119	Birkmyre, Henry (Sir)	Partner, Birkmyre Bros	8, Clive Row	ditto
120	Birtwistle, R E	Assistant, Landale & Morgan	3, Fairlie Place	ditto
121	Bishop, A H	Director, Guest, Keen, Williams, Ld	7, Council House Street	ditto
122	Bishop, H C W	Director, Balmer, Lawrie & Co, Ld	103, Clive Street	ditto
123	Bishop, Henry Maitland	Assistant Manager, Eastern Federal Union Insurance Co, Ld	9, Clive Street	ditto
124	Black, Duncan Morrison	Engineer, Burmah Shell Co of India, Ld	Hongkong House	ditto
125	Black, J O L	Sub-Accountant, The Eastern Bank, Ld	9, Clive Street	ditto
126	Black, R J	Manager, Maitland, Craig, Ld	E-2, Clive Buildings	ditto
127	Black, W A	Partner, Reed, Ward & Co	6, Lyons Range	ditto
128	Blair, Alistair Patrick, BA (Cantab)	Sales Manager, Burmah Shell Co of India, Ld	Hongkong House	ditto
129	Blair, John	Assistant, James, Finlay & Co, Ld	1, Clive Street	ditto

No.	Names.	Style or calling.	Residence or place of business.	Religion.
130	Bland, Charles Roxberry	Manager for India, W T Henley's Telegraph Works Co, Ld	Old Court House Corner	Christian
131	Bland, R A H	Sub-Accountant, Mercantile Bank of India, Ld	8, Clive Street	ditto
132	Blease, A C T	Traffic Manager, Calcutta Tramways Co Ld	7, Church Lane	ditto
133	Blewitt, H	Assistant, Gladstone, Wyllie & Co	4, Fairlie Place	ditto
134	Blomenstock, Leonard Mark	Partner, Piggott, Chapman & Co	6, Lyons Range	ditto
135	Boldy, J D	Proprietor, J D Boldy & Co	16, Galstaun Mansions	ditto
136	Bolland, Partrick Henry	Manager, Greaves, Cotton & Co, Ld	60, Dharamtala Street	ditto
137	Bollins, Cyril James	Assistant, Martin & Co	12, Mission Row	ditto
138	Bolst, Wilton James	Bullion Registrar, Calcutta Mint	47, Strand Road	ditto
139	Bolton, C J H	Managing Director, J Stone & Co, Ld	30, Galstaun Mansions	ditto
140	Bond, C L	Assistant, Standard-Vacuum Oil Co	6, Church Lane	ditto
141	Bond-Nelson, F O	Secretary and Director, Ingersoll-Rand (India), Ld	15, Clive Street	ditto
142	Booker, Alfred	Manager, William, Jacks & Co	10, Clive Street	ditto
143	Boothroyd, S L	Managing Director, Calcutta Chromotype Co	52-3, Bowbazar Street	ditto
144	Borroughs, T	Manager (Produce), Grahams Trading Co (India), Ld	6, Lyons Range	ditto
145	Borrowman, William James	Assistant, Gillanders, Arbuthnot & Co	8, Clive Street	ditto
146	Bowker, Henry Charles	Mains Engineer, C E S C, Ld	Victoria House	ditto
147	Bowman, J	Office Manager, D Gestetner (India), Ld	32, Grosvenor House	ditto
148	Bowman, Thomas Sellar	Journalist, *Statesman*, Ld	Statesman House	ditto

149	Boyce, C O	Superintendent, C E's Office, Port Commissioners	Strand Road	ditto
150	Bradly, M S	Assistant, Shaw, Wallace & Co	4, Bankshall Street	ditto
151	Bradshaw, Francis Henry	Director, Hoare, Miller & Co, Ld	5, Fairlie Place	ditto
152	Brady, P J Brenden	Manager, Philips Electrical Co (India), Ld	Tower House	ditto
153	Bragg, B A	Manager, Queensland Insurance Co, Ld	6, Royal Exchange Place	ditto
154	Braham, A E	Manager, A Bradley & Co	8, Old Court House Corner	Jew
155	Brain, N T	Director, Brooke Bond, Ld	2, Metcalfe Street	Christian
156	Bredee, G Leslie	Assistant, Andrew, Yule & Co, Ld	8, Clive Row	ditto
157	Brentford, C G	Assistant, Imperial Chemical Industries (India), Ld	18, Strand Road	ditto
158	Bright, J H	Partner, Bright & McIvor	16, Chowringhee	ditto
159	Brims, Alistair	Director, British India Publishing Co	Stephen House	ditto
160	Bristow, William George Bissett	Director, Imperial Tobacco Co of India, Ld	37, Chowringhee	ditto
161	Brittain, S S W	Manager, Grindlay & Co, Ld	6, Church Lane	ditto
162	Brodie, N	Assistant, Gladstone, Wyllie & Co	4, Fairlie Place	ditto
163	Brodie, William C G	Director, Lionel, Edwards, Ld	D-1, Clive Buildings	ditto
164	Brodie, William James Wilson	Partner, Ziffo & Co	5, Garstin Place	ditto
165	Broers, Alec William	Manager for India, Caledonian Insurance Co	8, Clive Street	ditto
166	Brown, A E	Director, Hall & Anderson, Ld	31, Chowringhee	ditto
167	Brown, Alex Jas	Director, Great Eastern Hotel, Ld	1, 2 & 3, Old Court House Street	ditto
168	Brown, A O	Partner, Mackinnon, Mackenzie & Co	16, Strand Road	ditto

No.	Names.	Style or calling.	Residence or place of business.	Religion.
169	Brown, C (Capt.)	Marine Superintendent, Mackinnon, Mackenzie & Co	16, Strand Road	Christian.
170	Brown, Eddis Gordon	Editor, Commercial Department, Reuters, Ld	7, Hare Street	ditto
171	Brown, Gordon Forbes	Assistant, Bird & Co	1-1, Clive Street	ditto
172	Brown, G R R	Assistant, Imperial Chemical Industries (India), Ld	18, Strand Road	ditto
173	Brown, James Alexander	Manager, C C Wakefield & Co, Ld	7, Royal Exchange Place	ditto
174	Brown, John	Engineer, Mackintosh, Burn, Ld	8, Clive Street	ditto
175	Brown, K N	Agency Manager, Manufacturers Life Insurance Co	27, Dalhousie Square	ditto
176	Brown, William Lothian	General Manager, Allahabad Bank, Ld	6, Royal Exchange Place	ditto
177	Bruce, E	Assistant, Balmer, Lawrie & Co, Ld	103, Clive Street	ditto
178	Buchan, David Gibb	Assistant, Andrew, Yule & Co, Ld	8, Clive Row	ditto
179	Buchanan, J	Senior Proprietor, Buchanan Sons & Co	21, Old Court House Street	ditto
180	Buchanan, James, MA	Physical Director to the Government of Bengal	Writers' Buildings	ditto
181	Buckler, R L B	District Manager, Lloyds Bank, Ld	101-1, Clive Street	ditto
182	Bucknall, M G	Assistant, Shaw, Wallace & Co	4, Bankshall Street	ditto
183	Buist, I D C	Assistant, A M Mair & Co	6, Royal Exchange Place	ditto
184	Bulger, Daniel D	Handicapper, Royal Calcutta Turf Club	11, Russell Street	ditto
185	Bulkeley, William L	Accountant, National City Bank of New York	4, Clive Street	ditto
186	Bullock, Herbert Stanley	Assistant Manager, Phoenix Assurance Co, Ld	28, Dalhousie Square	ditto
187	Bullock, J	General Manager, John, Dewar & Sons, Ld	12, Hare Street	ditto

188	Burder, J H	Partner, Jardine, Skinner & Co	4, Clive Row	ditto	
189	Burkinshaw, H R	Assistant, Jessop & Co, Ld	93, Clive Street	ditto	
190	Burn, H H	Partner, McLeod & Co	28, Dalhousie Square	ditto	
191	Burns, A D	Assistant, William, Jacks & Co	10, Clive Street	ditto	
192	Burns, J M	Partner, W J Walker & Co	6, Commercial Buildings	ditto	
193	Butler, B	Assistant, Shaw, Wallace & Co	4, Bankshall Street	ditto	
194	Buttar, I D W	Assistant, Price, Waterhouse, Peat & Co	B-4, Clive Buildings	ditto	
195	Butterwick, P E	Assistant Stores Officer, E B R	3, Koilaghat Street	ditto	
	C				
196	Caine, George William Robert	Chartered Accountant, Begg, Dunlop & Co, Ld	2, Hare Street	Christian	
197	Cameroa, Alec Leslie	Director, Andrew, Yule & Co, Ld	8, Clive Row	ditto	
198	Cameron, N	Director, Hoyle, Robson, Barnett & Co (India), Ld	Tower House	ditto	
199	Campbell, Duncan Bruce	Accountant, Cutler, Palmer & Co	10, Government Place, East	ditto	
200	Campbell, George Riddoch	Partner, Mackinnon, Mackenzie & Co	16, Strand Road	ditto	
201	Campbell, I P F	Director, Balmer, Lawrie & Co, Ld	103, Clive Street	ditto	
202	Campbell, R H D	Assistant, Shaw, Wallace & Co	4, Bankshall Street	ditto	
203	Campbell-Jones, H	Managing Director, Bombay Co, Ld	19, British Indian Street	ditto	
204	Canning, Walter Howard	Mains Engineer, C E S C, Ld	Victoria House	ditto	
205	Cantelo, Alfred	Assistant, Bird & Co	1-1, Clive Street	ditto	
206	Cardew, Frank Mackay, BA	Accountant, Martin & Co	12, Mission Row	ditto	

No.	Names.	Style or calling.	Residence or place of business.	Religion.
207	Carmichael, Charles Alexander	Assistant, Andrew, Yule & Co, Ld	8, Clive Row	Christian
208	Carmody, D R	Assistant Secretary to Agent, Agent's office, E I R	E I R House	ditto
209	Carpenter, Francis William Allan	Manager, Burn & Co, Ld	12, Mission Row	ditto
210	Carpenter, Francis William Allan	Assistant, Bird & Co	1-1, Clive Street	ditto
211	Carson, A P	Assistant, Babcock & Wilcox, Ld	4, Bankshall Street	ditto
212	Carson, Murray Alexander	Manager, Ralli Bros, Ld	16, Hare Street	ditto
213	Carter, C G	Manager, Stephens & Co, Ld	33, Bow Bazar Street	ditto
214	Carter, E J	Partner, Lovelock & Lewes	4, Lyons Range	ditto
215	Carter, E. P.	Manager, British Refrigerators	30-A, Chowringhee	ditto
216	Carter, R S	Acting Manager, Thacker, Spink & Co (1933), Ld	3, Esplanade, East	ditto
217	Carty, D B A	Director, Indian Oxygen & Acetylene Co, Ld	12, Mission Row	ditto
218	Cashmore, A	Assistant, Turner, Morrison & Co, Ld	6, Lyons Range	ditto
219	Catchpole, William Robinson	Director, W. Newman & Co, Ld	3, Old Court House Street	ditto
220	Caven, John William	Chief Accountant, C E S C, Ld	Victoria House	ditto
221	Chadwick, F D	Manager, Mather & Platt, Ld	7, Hare Street	ditto
222	Chalmers, Wm	Partner, Perman & Hynd	9, Clive Street	ditto
223	Chandler, James Harmer	Engineer, English Electric Co, Ld	D-4, Clive Buildings	ditto
224	Chir, Lawrance Anthony	Engineer, Callender's Cable & Construction Co, Ld	2, Pollock Street	ditto
225	Christie, A W	Assistant, J Thomas & Co	8, Mission Row	ditto

226	Christie, Thomas Murray Delamare	Inspector of Tea Gardens, Begg, Dunlop & Co, Ld	2, Hare Street	ditto
227	Church, John William Gadsden	Mains Engineer, C E S C, Ld	Victoria House	ditto
228	Church, V W B	Agent, Bank of India, Ld	9-A, Clive Street	ditto
229	Churnside, Joseph William	Assistant, Accounting Department, Imperial Tobacco Company of India, Ld	37, Chowringhee	ditto
230	Clark, B W	Manager, Allen & Hanburys, Ld	Clive Buildings	ditto
231	Clark, Ian Archibald	Partner, Anderson, Wright & Co	22, Strand Road	ditto
232	Clark Leonard Alfred	Director, R Sim & Co, Ld	2, Clive Row	ditto
233	Clarke, C E	Manager, Whiteaway, Laidlaw & Co, Ld	7, Chowringhee	ditto
234	Clarke, R W	Assistant, Jessop & Co, Ld	93, Clive Street	ditto
235	Cleghorn, Colin	Assistant, Anderson, Wright & Co	22, Strand Road	ditto
236	Clement, W L	Manager, Grahams Trading Co, Ld	6, Lyons Range	ditto
237	Clough, R J	Assistant, James, Finlay & Co, Ld	1, Clive Street	ditto
238	Clowes, S T	General Manager, W & T Avery, Ld	28, Waterloo Street	ditto
239	Clutsom, C R	Manager, Leyland Motors, Ld	76, Lower Circular Road	ditto
240	Cochran, William Banks	Assistant, Blackwood, Blackwood & Co	2, Mangoe Lane	ditto
241	Cockle, Harold Francis James Maurice	Assistant, Andrew, Yule & Co, Ld	8, Clive Row	ditto
242	Cocks, Harold Allan	Assistant, Asbestos Cement, Ld	135, Canning Street	ditto
243	Cohen, Abraham Fredrick	Manager, E Meyer & Co (1926), Ld	2, Clive Ghat Street	Jew
244	Cohen, D J	Landholder	11, Camac Street	ditto
245	Cohen, E A	Landholder	16, Loudon Street	ditto

No.	Name.	Style or calling.	Residence or place of business.	Religion.
246	Cohen, I H	Landholder	99, Prinsep Street	Jew
247	Cohen, Immanuel Jacob	Landholder	99, Prinsep Street	ditto
248	Cole, Dudley Maurice	Assistant, Caledonian Printing Co, Ld	3, Wellesley Place	Christian
249	Cole, Robert Walter	Assistant, North British & Mercantile Insurance Co, Ld	101-1, Clive Street	ditto
250	Collershaw, Herbert	Engineer, Bengal Telephone Corporation, Ld	8, Hare Street	ditto
251	Colley, Abel Rex	Assistant Commercial Manager, C E S C, Ld	Victoria House	ditto
252	Collingwood, Frank	House & Estate Agent	13-1 & 13-2, Government Place, East	ditto
253	Collis, R N	Chief Accountant, Lipton, Ld	9, Weston Street	ditto
254	Colquhoun, Samuel	Litho Branch, Photo-Litho Office, Survey of India	14, Wood Street	ditto
255	Coltart, Hugh Frederick	Partner, Mackenzie Lyall & Co	5, Mission Row	ditto
256	Colven, G F F	Assistant Accountant, The P & O Banking Corporation, Ld	1, Fairlie Place	ditto
257	Colville-Smith, Deryck	Assistant, W S Cresswell & Co	3, Clive Row	ditto
258	Comerton, James	Accountant, Martin & Co	12, Mission Row	ditto
259	Conquo, John Bernard	Assistant, Imperial Bank of India	Strand Road	ditto
260	Cook, Henry Millon	Director, East India Insurance Co, Ld	10, Clive Street	ditto
261	Cooper, A T	Director, Macfarlane & Co, Ld	4, Auckland Square	ditto
262	Cooper, Charles G	Partner, Barry & Co	2, Fairlie Place	ditto
263	Cooper, H G	Branch Manager, Burmah-Shell Co of India, Ld	Hongkong House	ditto
264	Cooper, Raymond Corry	Managing Agent, Landale & Clark, Ld	11, Clive Street	ditto

265	Cordwell, Ernest Thomas	Assistant, Bird & Co	1-1, Clive Street	ditto
266	Cormack, Albert John	Manager (Calcutta Office), W T Henley's Telegraph Works Co, Ld	Old Court House Corner	ditto
267	Corn, Harry Edward, M I E	Manager, John Thompson (Wolverhampton), Ld	4, Fairlie Place	ditto
268	Cornah, W R	Tailor & Outfitter	18-B, Park Street	ditto
269	Corner, A C	Resident Engineer, International Automatic Telephone Co, Ld (London).	8, Clive Street	ditto
270	Corrie, Thomas Edgar	Partner, King Bros	102, Clive Street	ditto
271	Corsar, C L	Assistant, Mackinnon, Mackenzie & Co	16, Strand Road	ditto
272	Counsell, Arthur Hope	Branch Manager, Blackie & Son (India), Ld	285-11, Bowbazar Street	ditto
273	Coutts, A G	Asstt. Accountant, P & O Banking Corpn, Ld	1, Fairlie Place	ditto
274	Cowan, D S	Assistant, Balmer, Lawrie & Co, Ld	103, Clive Street	ditto
275	Cowper, Ian Hugh, M.A., B.COM	Accountant, Royal Calcutta Turf Club	11, Russell Street	ditto
276	Cox, C R	Director, Associated Instrument Manufacturers (India) Ld	B-5, Clive Building	ditto
277	Crabb, T D	Assistant, Octavius, Steel & Co, Ld	14, Old Court House Street	ditto
278	Crabtree, H H, M.A.	Professor, St Paul's Cathedral College	33-1, Amherst Street	ditto
279	Crabtree, Hubert Lord	Assistant, Andrew, Yule & Co Ld	8, Clive Row	ditto
280	Craig-Williams, Edward	Assistant, Bird & Co	1-1, Clive Street	ditto
281	Crasto, J R	Manager, R K O Radio Pictures, Ld	Tower House	ditto
282	Craven, Archer Roy	Managing Director, George Spencer, Moulton & Co (India), Ld	8, Esplanade, East	ditto
283	Crawford, C A	Officiating Deputy C C M, E I R	E I R House	ditto
284	Crawford, C E J, BA, BSc (Oxon)	Assistant, Imperial Chemical Industries (India), Ld	18, Strand Road	ditto

No.	Names.	Style or calling	Residence or place of business.	Religion.
285	Crawshaw, Joseph Sykes	Assistant, Ford, Rhodes, Thornton & Co	Tower House, Chowringhee Square	Christian
286	Cree, T W	Assistant, Mackinnon, Mackenzie & Co	16, Strand Road	ditto
287	Cresswell, A R	Manager, Sutton & Sons, Ld	35 & 36, Park Mansions	ditto
288	Crichton, Frank	Assistant, Andrew, Yule & Co, Ld	8, Clive Row	ditto
289	Crooks, G R	Assistant, Price, Waterhouse, Peat & Co	B-4, Clive Buildings	ditto
290	Crosby-Flynn, G	Partner, India Oil Co	Stephen House	ditto
291	Cross, C Stratton	Assistant, Remfry & Son	Stephen House	ditto
292	Cruickshank, Geo	General Manager, Lipton, Ld	9, Weston Street	ditto
293	Cruickshank, R D	Partner, Thomas, Seth Apcar & Co	8, Clive Street	ditto
294	Cubitt, Frederick Salter	Secretary, Bengal Club	Bengal Club	ditto
295	Cumberbatch, Hugh Douglas	Director, Andrew, Yule & Co, Ld	8, Clive Row	ditto
296	Cumming, D J, ACA	Accountant, Imperial Chemical Industries (India), Ld	18, Strand Road	ditto
297	Cummins, John Eric	Assistant, Ralli Bros, Ld	16, Hare Street	ditto
298	Curlender, Hugh	Partner, S Curlender & Co	8, Old Court House Corner	Jew
299	Curlender, J	Partner, S Curlender & Co	8, Old Court House Corner	ditto
300	Curlender, Moses	Partner, S Curlender & Co	8, Old Court House Corner	ditto
301	Curtis, R C	District Commercial Officer (Claims), B N R	4, Lord Sinha Road	Christian
	D			
302	D'Costa, Oscar Hilter	Head Assistant, Bengal Secretariat, Commerce Department	Writers' Buildings	Christian
303	Dale, Alfred George	Assistant, Andrew, Yule & Co, Ld	14, British Indian Street	ditto

304	Dalgarno, Douglas James	Director, Marshall Sons & Co (India), Ld	99, Clive Street	ditto
305	Dallas, J	Director, Willas Construction Co, Ld	19, Chowringhee	ditto
306	Dalziel, Alfred Robert Joslin	Head Engraver, Engraving Office, Survey of India	13, Wood Street	ditto
307	Dand, J	Chief Accountant, Port Commissioners' Office	Strand Road	ditto
308	Daniel, F	Governing Director, Morrison & Cottle, Ld	30-C, Chowringhee	ditto
309	Darby, Stanley Charles	Manager, Prudential Assurance Co, Ld	Clive Buildings	ditto
310	Darling, H J	Chief Electrical Engineer, E I R	E I R House	ditto
311	David, Bernardine Carty	Director, Martin & Co	12, Mission Row	ditto
312	David, S	Assistant, F W Heilgers & Co	1-1, Clive Street	ditto
313	Davidson, Ronald James Robertson	Assistant, Andrew Yule & Co, Ld	8, Clive Row	ditto
314	Davidson, R O	Assistant, McLeod & Co	28, Dalhousie Square	ditto
315	Davidson, William Bruce	Partner, Cooke & Kelvey	20, Old Court House Street	ditto
316	Davies, Allen Haddon	Secretary, Imperial Tobacco Co of India, Ld	37, Chowringhee	ditto
317	Davies, H M	Dy. Chief Mechanical Engineer, E I R	E I R House	ditto
318	Davies, R H	Accountant, Grindlay & Co, Ld	6, Church Lane	ditto
319	Davis, G	Assistant, Shaw Wallace & Co	4, Bankshall Street	ditto
320	Davy, Horace Frederick	Controller of Inspection, Indian Stores Department	6, Esplanade, East	ditto
321	Dawson, James	Manager, Cox & Kings (Agents), Ld	5, Bankshall Street	ditto
322	Daymond, J B	Editor, *A A B Magazine*	46, Galstaun Mansions	ditto
323	Deane, E S (Capt)	Starter, Royal Calcutta Turf Club	11, Russell Street	ditto

No.	Names.	Style or callin	Residence or place of business.	Religion.
324	Deeks. William Gordon	Partner, Cooke & Kelvey	20, Old Court House Street	Christian
325	Delph, C J	Representative for the East, Baird & Tatlock (London), Ld	Avenue House, Chowringhee Square	ditto
326	Demetriadi, Constantine George	Assistant, Ralli Bros, Ld	16, Hare Street	ditto
327	Demetrius, St. John	Chartered Accountant, George Read & Co	Avenue House, Chowringhee Square	ditto
328	Dennett, B G	Director, Hall & Anderson, Ld	31, Chowringhee	ditto
329	Dent, Eric Raymond	Junior Auditor, E B R	3, Koilaghat Street	ditto
330	DePenning, H A	Manager, H V Williams & Co	12, Esplanade Mansions	ditto
331	Devine, W N P	Asstt Editor, *Indian Aviation*	13, Ezra Mansions	ditto
332	Dias, L	Head Assistant, Bengal Secretariat, Special Branch	Writers' Buildings	ditto
333	Dickens. C E	District Signal Engineer, E I R	E I R House	ditto
334	Dickson, David Law	Partner, Normans Ross & Co	3, Clive Street	ditto
335	Dickson, James	Assistant Accountant, National Bank of India, Ld	104, Clive Street	ditto
336	Dickson, William	Partner, Perman & Hynd	9, Clive Street	ditto
337	Dignum, F A	Proprietor, L & H Dignum	8, Canning Street	ditto
338	Dixon, John	Superintending Engineer, R S N Co, Ld	2, Fairlie Place	ditto
339	Dobeson, Gerald Albert	Superintendent, Mercantile Marine Department	15-1, Strand Road	ditto
340	Docherty, A S	Assistant, Balmer Lawrie & Co, Ld	103, Clive Street	ditto
341	Dod, T F	Assistant, Shaw Wallace & Co	4, Bankshall Street	ditto
342	Dodd, JO	Director, Hoyle Robson Barnett & Co (India), Ld	Tower House	ditto

343	Dods, G R	Assistant, Mackinnon, Mackenzie & Co	16, Strand Road	ditto
344	Doherty, G P M	Manager, Lloyds Bank, Ld	101-1, Clive Street	ditto
345	Donald, John Inglis	Accountant, National Bank of India, Ld	104, Clive Street	ditto
346	Donaldson, A A (C A)	Accountant, Burmah Shell Co of India Ld	Hongkong House	ditto
347	Donaldson, M	Partner, Manton & Co	13, Old Court House Street	ditto
348	Dorsett, G C	Manager, Commercial Pine Forests, Ld	4, Lyons Range	ditto
349	Douetil, Phillip Victor (Capt)	Secretary, Royal Calcutta Turf Club	11, Russell Street	ditto
350	Douglas, Thomas	Director, Duncan Brothers & Co, Ld	101, Clive Street	ditto
351	Dove, George Terence	Assistant, North British & Mercantile Insurance Co, Ld	101-1, Clive Street	ditto
352	Dow, Albert James	Director, J D Jones & Co, Ld	8, Clive Street	ditto
353	Downey, C E S	Representative, Crosse & Blackwell, Ld	29, Waterloo Street	ditto
354	Downie, Leslie W	Director, Don Watson & Co	19, British Indian Street	ditto
355	Doyle, David Colquhoun	Assistant, Andrew Yule & Co, Ld	8, Clive Row	ditto
356	Doyle, J F	Director, W Newman & Co, Ld	3, Old Court House Street	ditto
357	Dudley, Trevor Morgan	Engineer, Burmah Shell Co of India, Ld	Hongkong House	ditto
358	Duff, D Inglis	Assistant, Barry & Co	2, Fairlie Place	ditto
359	Duncan, J N	Cashier, B I S N Co, Ld	8, Strand Road	ditto
360	Duncan, R H C	Eastern Group Manager, Brooke Bond India, Ld	2, Metcalfe Street	ditto
361	Duncan, Thomas Charles	Partner, F C Pallachi & Co	7, Royal Exchange Place	ditto
362	Duncan, W R J	Tea Buyer, Harrisons & Crossfields, Ld	6, Church Lane	ditto

No.	Names.	Style or calling	Residence or place of business.	Religion.
363	Dunlop, J	Superintending Engineer, B I S N Co, Ld	16, Strand Road	Christian
364	Dunsford, Edward Henry	Assistant Construction Engineer, C E S C, Ld	Victoria House	ditto
365	Duthie, Donald	Mains Engineer, C E S C, Ld	Victoria House	ditto
366	Duttson, R D	Assistant, Burn & Co, Ld	12, Mission Row	ditto
	E			
367	Eadie, W E	Senior Accountant, Burmah-Shell Co of India, Ld	Hongkong House	Christian
368	Eastgate, C C T, MIME	Electrical Engineer, Octavius Steel & Co, Ld	14, Old Court House Street	ditto
369	Eatwell, G H F	Director, T E Bevan & Co, Ld	Grosvenor House	ditto
370	Edgar, William Richard, BSc	Principal, St. Thomas' School	58-B, Free School Street	ditto
371	Edgley, G H G	Assistant, Lovelock & Lewes	4, Lyons Range	ditto
372	Edmondson, T, FIAA	Government Architect, Bengal	Writers' Buildings	ditto
373	Edney, E H	Assistant, Imperial Chemical Industries (India), Ltd	18, Strand Road	ditto
374	Edward, R R	Director, Roberts, McLean & Co, Ld	101, Clive Street	ditto
375	Edwards, Frank Vaughan	Assistant, Andrew Yule & Co, Ld	8, Clive Row	ditto
376	Edwards, Leonard Brooke	Manager, The Baldwin Locomotive Works	5, Dalhousie Square	ditto
377	Edwards, Lionel	Managing Director, Lionel, Edwards, Ld	D-1, Clive Buildings	ditto
378	Elcock, James	General Manager, Planters' Stores & Agency Co, Ld	11, Clive Street	ditto
379	Elder, A G	Assistant, Jardine, Skinner & Co	4, Clive Row	ditto
380	Elias, I H	Personal Assistant to Director of Public Health, Bengal	Writers' Buildings	Semitic

381	Elias, Joseph Manasseh	Accountant, E D Sassoon & Co, Ld	101, Clive Street	Jew
382	Elias, M	Partner, M Elias & Co	100, Clive Street	ditto
383	Elias, N M	Partner, M Elias & Co	100, Clive Street	ditto
384	Elkan, C V	Director, Shalimar Paint, Colour, Varnish & Co, Ld	6, Lyons Range	Christian
385	Elkins, Antony Joseph	Assistant, Gillanders, Arbuthnot & Co	8, Clive Street	ditto
386	Elley, Thomas Benson	Director, Sinclair, Murray & Co, Ld	6, Royal Exchange Place	ditto
387	Elliot, M C	Accountant, The American Express Co (Inc)	14 & 15, Government Place	ditto
388	Elliot, Walter Robert	Assistant, Place, Siddons & Gough	6, Lyons Range	ditto
389	Elliott, Sydney Horace	Assistant Manager, I S S D	Chittaranjan Avenue, South	ditto
390	Ellis, E	Sub-Manager, E D Sassoon & Co	101, Clive Street	ditto
391	Ellis, Eric	Director, Eastern Federal Union Insurance, Co. Ld	9, Clive Street	Jew
392	Ellis, Jesse	Managing Director, Skoda (India), Ld	8, Royal Exchange Place	Christian
393	Ellis, J W	Director, Don Watson & Co	19, British Indian Street	ditto
394	Ellis, R	Superintendent, Licensed Measurer's Department	2, Clive Street	ditto
395	Ellis, W S	Acting Chief Engineer, Calcutta Tramways Co, Ld	7, Church Lane	ditto
396	Ellison, Eric Douglas Vernon	Assistant Controller of Inspection, Indian Stores Department	6, Esplanade East	ditto
397	Elmore, John Napier	Director, John S Elmore, Ld	7, Bow Bazar Street	ditto
398	Elsden, Smith Archibald	Assistant Construction Engineer, C E S C, Ld	Victoria House	ditto
399	Elton, Hubert, MA (Cantab)	Assistant, Burmah Shell Co of India, Ld	Hongkong House	ditto
400	Elton, J F	Partner, Kilburn & Co	4, Fairlie Place	ditto

No.	Names.	Style or calling	Residence or place of business.	Religion
401	Emeny, L H	Merchant	Mercantile Buildings	Christian
402	Emery, William John Weymes	Assistant Mains Superintendent, C E S C, Ld	Victoria House	ditto
403	Emmanuelov, V E	Civil Engineer, Bird & Co	1-1, Clive Street	ditto
404	Eustace, Frank Henry	Salesman, W & T Avery, Ld	28-2, Waterloo Street	ditto
405	Euthymopulo, George	Manager, Ralli Bros, Ld	16, Hare Street	ditto
406	Evans, Ernest John	Manager, P & M Co (England), Ld	7, Council House Street	ditto
407	Evans, James Amphlett Edwardes	Assistant, Hoare, Miller & Co, Ld	5, Fairlie Place	ditto
408	Evans, James David	Manager (Turnery), Army & Navy Stores, Ld	41, Chowringhee	ditto
409	Evans, John Philip	Assistant, Anderson, Wright & Co	22, Strand Road	ditto
410	Evans, Reginald Ewart	Manager, Samuel, Fitze & Co, Ld	26 Chowringhee	ditto
411	Evans, W	Proprietor, W Evans & Co	3, Mangoe Lane	ditto
412	Evans, William Robert	Manager, W & T Avery, Ld	28-2, Waterloo Street	ditto
413	Evans, W T	Manager, Wellington & Ward, Ld	Tower House, Chowringhee Square	ditto
414	Ezekiel, Herbert	Partner, Normans, Ross & Co	3, Clive Street	Jew
415	Ezra, D E	Partner, Edward & Co	Norton Buildings	ditto
416	Ezra, Edward S	Partner, Edward & Co	Norton Buildings	ditto
	F			
417	Fairbairn, Douglas Chisholm	Assistant Secretary, Bengal Chamber of Commerce	2, Clive Street	Christian
418	Fairbrother, Valentine	Assistant, Spencer & Co, Ld	32, Chowringhee	ditto

419	Farquharson, John Robert	General Manager, Burmah-Shell Co of India, Ld	Hongkong House	ditto
420	Farrell, Dennis Joseph	Assistant, Begg, Dunlop & Co, Ld	2, Hare Street	ditto
421	Farrow, Harold Arthur Lewis	Assistant, F W Heilgers & Co	1-1 Clive Street	ditto
422	Faulkner, George M	Director, Steiners, Ld	Mohta House, 29, Strand Road	ditto
423	Fawcett, John North	Manager (Stationery Deptt), Thacker, Spink & Co. (1933), Ld	3, Esplanade East	ditto
424	Fawkes, Percival Owen	Managing Director, Ranken & Co, Ld	4, Old Court House Street	ditto
425	Fearn, Reginald John, B Sc (Lond)	Principal, La Martiniere	11, Loudon Street	ditto
426	Ferguson, F F M	Director, Dunlop, Rubber Co (India), Ltd	42, Free School Street	ditto
427	Ferguson, R W N	Chief Accountant, India Genl Navn & Ry Co, Ld	4, Fairlie Place	ditto
428	Ferrier, Charles Duncan, MA, B Sc	Assistant, Gillanders Arbuthnot & Co	8, Clive Street	ditto
429	Fettes, Kenneth Richard	Assistant, Gillanders Arbuthnot & Co	8, Clive Street	ditto
430	Field, Osmond James	Inspector, Smoke Nuisances Commission, Bengal	3, Charnok Place	ditto
431	Fielder, C J	Assistant, Turner, Morrison & Co, Ld	6, Lyons Range	ditto
432	Findlay, James	Assistant, Bird & Co	1-1, Clive Street	ditto
433	Findlay, John	Assistant, Keymer, Bagshawe & Co, Ld	4, Lyons Range	ditto
434	Findlay, W H	Assistant Accountant, P & O Banking Corporation, Ld	1, Fairlie Place	ditto
435	Finlay, Shaw	Assistant, Burn & Co, Ld	12, Mission Row	ditto
436	Finlayson, A, B Sc	Executive Engineer, Dredger Division	3, Charnock Place	ditto
437	Finney, A D	Assistant, Mackinnon, Mackenzie & Co	16, Strand Road	ditto
438	Fisher, A V	Partner, Lardner, North & Co	8, Strand Road	ditto
439	Fisher, J P	Waterproofing Engineer, John, Fisher & Co	B-5, Clive Buildings	ditto
440	Fisher, Noel Lincoln	Agent, Thos Cook & Son, Ld	4, Dalhousie Square	ditto

No.	Names.	Style or calling	Residence or place of business.	Religion.
441	Fisk, Frederick William ..	Director, Walter Bushnell, Ld	21, Old Court House Street ..	Christian
442	Fitzgerald, Michael Arnold	Sr. Superintendent, Reserve Bank of India ..	8, Council House Street	ditto
443	Flangini, Panaghi Nicholas	Assistant, Ralli Bros, Ld	16, Hare Street	ditto
444	Fleming, H C ..	Assistant, Turner, Morrison & Co, Ld	6, Lyons Range	ditto
445	Fleming, Robert ..	Assistant, J C Duffus & Co, Ld	5, Fairlie Place	ditto
446	Fletcher, T	Assistant, Imperial Chemical Industries (India), Ld	13, Strand Road	ditto
447	Fletton, Alfred George ..	Accountant, Bengal Telephone Corporation, Ld ..	8, Hare Street	ditto
448	Ford, A H	Assistant, Mackinnon, Mackenzie & Co	16, Strand Road	ditto
449	Forrester, G D ..	Manager, Burmah Shell Co of India, Ld	Hongkong House	ditto
450	Forsyth, T (Capt) ..	Assistant, Gladstone, Wyllie & Co	4, Fairlie Place	ditto
451	Foster, A R, BSc (Lond)	Assistant, Imperial Chemical Industries (India), Ld	18, Strand Road	ditto
452	Foster, J G (Capt) ..	Assistant, Kilburn & Co	4, Fairlie Place	ditto
453	Foster, L S	Assistant, Place, Siddons & Gough	6, Lyons Range	ditto
454	Foulis, James Craig ..	Stores Supdt, C E S C, Ld	Victoria House	ditto
455	Fox, H L	Assistant, Mackinnon, Mackenzie & Co	16, Strand Road	ditto
456	Fox, Herbert McDermott	Assistant, Andrew, Yule & Co, Ld ..	8, Clive Row	ditto
457	Francis, C ..	Head Assistant, Poll (Jails) Deptt, Bengal ..	Writers' Buildings	ditto
458	Francis, Dudley Wadlow	Assistant, London & Lancashire Insurance Co, Ld ..	2, Fairlie Place	ditto
459	Fraser Archibald ..	Partner, Blacker & Co	2, Clive Street	ditto
460	Fraser, D ..	Director, Don Watson & Co, Ld ..	19, British Indian Street ..	ditto

461	Fraser, James William (Capt)	Director, George O Penn (India), Ld	22, Chowringhee	ditto
462	Fraser, J N	Assistant, Octavius Steel & Co, Ld	14, Old Court House Street	ditto
463	Fraser, Roderick Donald	Manager, The Indo-Burma Petroleum Co, Ld	8, Clive Street	ditto
464	Fricker, Ernest Stanley Gibbs	Accountant, Planters' Stores & Agency Co, Ld	11, Clive Street	ditto
465	Fritchley, George Bowen	Architect, Martin & Co	12, Mission Row	ditto
466	Fritchley, Horace Christopher	Principal, Calcutta Boys' School	72, Corporation Street	ditto
467	Fuller, R U	Partner, Price, Waterhouse, Peat & Co	B4, Clive Buildings	ditto
468	Fyfle, F C	Assistant, Shaw, Wallace & Co	4, Bankshall Street	ditto

G

469	Gahan, Patrick Joseph	Controller of Purchase, Indian Stores Department	6, Esplanade, East	Christian
470	Gale, A C	Manager, American Foreign Insurance Association	8, Clive Street	ditto
471	Gallie, James	Assistant, Duncan Brothers & Co, Ld	101, Clive Street	ditto
472	Galloway, James E	Assistant, Andrew, Yule & Co, Ld	8, Clive Row	ditto
473	Gardner, Chas	Assistant Manager, Calcutta General Printing Co, Ld	300, Bowbazar Street	ditto
474	Gardner, G J	Assistant, Kettlewell, Bullen & Co, Ld	21, Strand Road	ditto
475	Gardner, H E	Assistant Accountant, The P & O Banking Corpn, Ld	1, Fairlie Place	ditto
476	Gardner, W G	Assistant, Asbestos Cement, Ld	135, Canning Street	ditto
477	Gardyne, Finlay	Assistant, Commercial Union Assurance Co, Ld	32, Dalhousie Square	ditto
478	Garland, A J	Agent, Jute Industries, Ld	1A, Hare Street	ditto
479	Garnham, G E	Assistant Tea Buyer, Brooke Bond India, Ld	2, Metcalfe Street	ditto

No	Names	Style or calling.	Residence or place of business.	Religion.
480	Garratt, B	Accountant, The P & O Banking Corpn, Ld	1, Fairlie Place	Christian
481	Garrie, G M	Assistant, Thomas Duff & Co, Ld	3, Clive Row	ditto
482	Gaynor, Harold Francis	Assistant, Bird & Co	1-1, Clive Street	ditto
483	Gemmell, A	Managaer, Heatly and Gresham, Ld	6, Waterloo Street	ditto
484	Gemmell, G W	Director, Balmer, Lawrie & Co, Ld	103, Clive Street	ditto
485	George, Ernst William	Junior Auditor, E B R	3, Koilaghat Street	ditto
486	George, H H, BE	Assistant, Associated Electrical Industries (India), Ld	8, Clive Street	ditto
487	Gibb, David Valentine	Director, Andrew Yule & Co, Ld	8, Clive Row	ditto
488	Gibson, F J B (Capt.)	Assistant Conservator, Port Commissioners' Office	Strand Road	ditto
489	Gibson, J C	Deputy Agent, (Organisation), E I R	E I R House	ditto
490	Gibson, John Mckenzie	Accountant, The Eastern Bank, Ld	9, Clive Street	ditto
491	Gilbert, C F	Dy Agent, Works, E I R	E I R House	ditto
492	Gill, H C F	Assistant, Lovelock & Lewes	4, Lyons Range	ditto
493	Gill, Henry Hugh Beckwith	Manager, Standard Telephone & Cables, Ld	4, Esplanade East	ditto
494	Gillespie, A T	Merchant	13, Government Place, East	ditto
495	Gillespie, A W	Secretary, Dunlop Rubber Co (India), Ld	42, Free School Street	ditto
496	Ginivan, Edward	Manager, Carr & Co, Ld	3, Waterloo Street	ditto
497	Girling, Eustace George, B SC	Engineer, Martin & Co	12, Mission Row	ditto
498	Girvan, R T	Director, Associated Instrument Manufacturers (India), Ld	B-5, Clive Buildings	ditto
499	Gladstone, Thomas Steuart	Manager, Gillanders, Arbuthnot & Co	8, Clive Street	ditto

500	Glenn, Eric Birch	Manager, Boots Pure Drug Co, Ld	Mercantile Buildings	ditto
501	Glennie, J D F	Resident	7-1, Lord Sinha Road	ditto
502	Gloag, Alstair Francis	Manager, A & J Main & Co, Ld	10, Clive Street	ditto
503	Glover, R P	Assistant, Turner Morrison & Co, Ld	6, Lyons Range	ditto
504	Goddard, W D	Director, Ingersoll Rand (India), Ld	15, Clive Street	ditto
505	Godfrey, Walter, BA	Assistant to H M's Senior Trade Commissioner in India	4, Fairlie Place	ditto
506	Godley, T	Executive Engineer, Calcutta Tramways Co, Ld	7, Church Lane	ditto
507	Godwin, J L	Manager, Simons Motor Units of India, Ld	7, Chittaranjan Avenue	ditto
508	Goff, G H	Dist Traffic Superintendent, E B R	3, Koilaghat Street	ditto
509	Golder, James Horace	Manager, Central Forms Store	166, Dharamtala Street	ditto
510	Golledge, Stephen Edward	Assistant, A & J Main & Co, Ld	10, Clive Street	ditto
511	Gomes, Robert, MA	Professor, St Xavier's College	30, Park Street	ditto
512	Gooding, O	Manager, Hall & Anderson, Ld	31, Chowringhee	ditto
513	Gordon, William Law	Partner, Macneill & Co	2, Fairlie Place	ditto
514	Gosling, G W	Director, Martin & Harris, Ld	17, Prinsep Street	ditto
515	Goss, Ernest Cyril	Assistant, F W Heilgers & Co	1-1, Clive Street	ditto
516	Gossland, A	Asstt Manager, Dorman Long & Co, Ld	8, Cilve Street	ditto
517	Gourlay, James Simpson	Assistant, Allahabad Bank, Ld	6, Royal Exchange Place	ditto
518	Gow, W	General Manager, Howrah Iron Works	12, Mission Row	ditto
519	Goward, Ernest Evelyn	Assistant, Imperial Chemical Industries (India), Ld	18, Strand Road	ditto

No.	Names.	Style or calling.	Residence or place of business.	Religion.
520	Gracie, Frank	Director, Imperial Tobacco Co of India, Ld	37, Chowringhee	Christian
521	Graham, C V	Assistant, Jessop & Co, Ltd	93, Clive Street	ditto
522	Graham, John St Aidan Irvine	Manager, United Steel Co (India), Ld	4. Lyons Range	ditto
523	Graham, John Stevenson	Director, Duncan Brothers & Co, Ld	101, Clive Street	ditto
524	Graham, W A	Travel Representative, The American Express Co, Inc	14 & 15, Government Place	ditto
525	Grant, C W	Assistant, I G N & Ry Co, Ld	4, Fairlie Place	ditto
526	Grant, D T	Sub-Accountant, The Eastern Bank, Ld	9, Clive Street	ditto
527	Grant, E	Assistant, Jessop & Co, Ld	93, Clive Street	ditto
528	Grant, Francis Herbert	Chief Draftsman, Map Publication Office Survey of India	13, Wood Street	ditto
529	Grant, John	Partner, Graham Roberts & Co	5, Fairlie Place	ditto
530	Grant, Robert	Chief Inspector and Secretary, Bengal Smoke Nuisances Commission	3, Charnock Place	ditto
531	Gray, Donald S	General Manager for India, Standard Vacuum Oil Co	6, Church Lane	ditto
532	Gray, J M	Assistant, Grahams Trading Co (India), Ld	6, Lyons Range	ditto
533	Gray, Marcus Dods, MA	Professor, Scottish Church College	4, Cornwallis Square	ditto
534	Gray, Stewart	Partner, Reed Ward & Co	6, Lyons Range	ditto
535	Greaves, Phillip	Artist, *Statesman*, Ld	Statesman House	ditto
536	Green, Henry	Resident	52, Elliot Road	ditto
537	Green, N M	Accountant, Chartered Bank of India, Australia and China	1-1, Clive Street	ditto
538	Greene, Albert George	Assistant Engineer, Bengal Telephone Corporation, Ld	8, Hare Street	ditto

539	Greig, Hamish Adams, CA	Director, Standard Literature Co, Ld	13-1, Old Court House Street	ditto
540	Gresham, S R	Director, Heatly & Gresham, Ld	6, Waterloo Street	ditto
541	Grewar, A K	Assistant, Thomas Duff & Co, Ld	3, Clive Row	ditto
542	Grice, W H	Manager, Imperial Chemical Industries (India), Ld	18, Strand Road	ditto
543	Griffin, B B	Manager, Ever Ready Co (India), Ld	19-B, British Indian Street	ditto
544	Griffin-Chave, Frederick Thomas	General Manager, F & C Osler, Ld	12, Old Court House Street	ditto
545	Griffith, Richard Graham, BA	Assistant, Williamson Magor & Co	4, Mangoe Lane	ditto
546	Griffiths, Walter Ace	Assistant, Burmah Shell Co of India, Ltd	Hongkong House	ditto
547	Grimsdick, E P, AMIE	Managing Director and General Manager, Associated Electrical Industries (India), Ld	8, Clive Street	ditto
548	Grimshaw, Arthur	Works Manager, Kodak, Ld	17, Park Street	ditto
549	Grove, Eric Harry	Assistant, Gillanders, Arbuthnot & Co	8, Clive Street	ditto
550	Grover, G H	Assistant, Imperial Chemical Industries (India), Ltd	18, Strand Road	ditto
551	Growcott, D R	Assistant, Shaw, Wallace & Co	4, Bankshall Street	ditto
552	Gubbay, A R	Proprietor, D A Gubbay & Co	6, Pollock Street	Jew
553	Gubbay, Ezekiel Joseph	Partner, H D Cartwright & Co	8, Clive Street	ditto
554	Gumbrill, A	Publicity Officer, C C M's Office, E I R	E I R House	Christian
555	Gunn, T B	Assistant, Imperial Chemical Industries (India), Ld	18, Strand Road	ditto
556	Gunning, John George	Assistant, Ludlow Jute Co, Ltd	7, Royal Exchange Place	ditto
557	Gunnis, T G	Electrical Engineer, Balmer Lawrie & Co, Ld	103, Clive Street	ditto
558	Guthrie, Frederick Charles	Manager, James Finlay & Co, Ld	1, Clive Street	ditto

No.	Names.	Style or calling.	Residence or place of business.	Religion.
559	Guthrie, James	Assistant Commercial Manager, C E S C, Ld	Victoria House	Christian
560	Guthrie J H	Manager, Babcock & Wilcox, Ld	4, Bankshall Street	ditto
561	Guy, Ernest Harold	Assistant, Planters' Stores & Agency Co, Ld	11, Clive Street	ditto
562	Gye, Norman Dato	Partner, W S Cresswell & Co	3, Clive Street	ditto
	H			
563	Haddow, R	Assistant, Shaw, Wallace & Co	4, Bankshall Street	Christian
564	Haddow, R R	Partner, Mackinnon, Mackenzie & Co	16, Strand Road	ditto
565	Haigh, Geo	General Manager, A K Dn, Remington Rand Inc	3, Council House Street	ditto
566	Hall, Cecil Byng	Partner, Normans Ross & Co	3, Clive Street	ditto
567	Hall, P N	Governing Director, Hall & Anderson, Ld	31, Chowringhee	ditto
568	Halpern, Walter Kenneth Leopold	Sales Manager, Butterworth & Co (India), Ld	Avenue House	ditto
569	Hamilton, John	Actg Manager, Standard Life Assurance Co	34, Dalhousie Square	ditto
570	Hamilton, Kenneth Allen	Branch Manager, Army & Navy Co-operative Society, Ld	41, Chowringhee	ditto
571	Hammond, Keith	Assistant, Andrew Yule & Co, Ld	8, Clive Row	ditto
572	Hampson, A E	Sales Manager, Jenson & Nicholson (India), Ld	2, Fairlie Place	ditto
573	Hannay, J M (Capt)	Ag Superintendent, B I S N Co, Ld	8, Strand Road	ditto
574	Harding, H R, AMIE	Assistant, Associated Electrical Industries (India), Ld	8, Clive Street	ditto
575	Hards, Richard Leo	Engineer, Begg Dunlop & Co, Ld	2, Hare Street	ditto
576	Harley, A H, MA	Principal, Islamia College	8, Wellesley Street	ditto
577	Harmer, W T Vizer	Manager, Bengal Iron Co, Ld	4, Lyons Range	ditto

578	Harper, J B	Managing Director, Ivan Jones, Ld	8, Dalhousie Square, East	ditto
579	Harris, E F (Capt.)	Cargo Superintendent, Mackinnon Mackenzie & Co	8, Strand Road	ditto
580	Harris, Maurice George Robert	Director, Martin and Harris, Ld	17, Prinsep Street	ditto
581	Harris, N D, MA	Chief Accountant, Imperial Chemical Industries (India), Ld	18, Strand Road	ditto
582	Harrison, Frank Seymour	Manager, South British Insurance Co, Ld	5, Clive Street	ditto
583	Harrison, S J	Construction Superintendent, C E S C, Ld	Victoria House	ditto
584	Hart, Charles Alfred	Engineer, Imperial Tobacco Co of India, Ld	37, Chowringhee	ditto
585	Hartley, Frederick Mathews	Assistant, Place, Siddons and Gough	6, Lyons Range	ditto
586	Hartley, K J H	Assistant, Price Waterhouse, Peat & Co	B-4, Clive Buildings	ditto
587	Harvey, B L, OBE	Dy Chief Engineer (North), E B R	3, Kaylaghata Street	ditto
588	Harvey, Ernest William	Manager, Ludlow Jute Co, Ld	7, Royal Exchange Place	ditto
589	Harvey, S	Director, Roberts McLean & Co, Ld	101, Clive Street	ditto
590	Hatch, Keith (Major)	Asstt Secretary, Royal Calcutta Turf Club	11, Russell Srreet	ditto
591	Hatfield, C R	Partner, Shaw Wallace & Co	4, Bankshall Street	ditto
592	Hawes, G L	Manager, Norwich Union Fire Insurance Society, Ld	2, Hare Street	ditto
593	Haynes, Stanley Tom	Assistant, Phœnix Assurance Co, Ld	28, Dalhousie Square	ditto
594	Haywood, J S	Proprietor, J S Haywood & Co	7, Lyons Range	ditto
595	Haywood, Rogers	Partner, Piggott, Chapman & Co	6, Lyons Range	ditto
596	Heape, Charles Herbert	Partner, Place, Siddons & Gough	6, Lyons Range	ditto
597	Hearn, Owen	Manager, Cutler Palmer & Co	10, Government Place, East	ditto
598	Heath, J F	Director, Guest, Keen, Williams, Ld	7, Council House Street	ditto
599	Heath, Roland Harding	Secretary, J B Norton & Sons, Ld	Norton Buildings	ditto

No.	Names.	Style or calling.	Residence or place of business.	Religion.
600	Heath, W A H	District Manager, Govan Bros, Ld	20, Park Street	Christian
601	Hechle, James Rea	Assistant, Place, Siddons and Gough	6, Lyons Range	ditto
602	Heesom, Brian Gilford	Accountant, Begg Dunlop & Co, Ld	2, Hare Street	ditto
603	Hele, H E	Manager, H J Foster & Co, Ld	Sassoon House	ditto
604	Henderson, C E	Accountant, Hongkong and Shanghai Banking Corpn	Hongkong House	ditto
605	Henderson, Douglas Hedley Phelips	Mains Engineer, C E S C Ld	Victoria House	ditto
606	Henderson, D S	Managing Director, D L Millar & Co, Ld	28, Dalhousie Square, West	ditto
607	Henderson, T	Director, Mackintosh, Burn, Ld	8, Clive Street	ditto
608	Hendry, D, MC, BSc	Director, Imperial Chemical Industries (India), Ld	18, Strand Road	ditto
609	Henfrey, J B F	Asstt Supdt, Bengal Chamber of Commerce	2, Clive Street	ditto
610	Henry, Claude Francis	Assistant, Bird & Co	1-1, Clive Street	ditto
611	Herbert, N G	Assistant, Imperial Chemical Industries (India), Ld	18, Strand Road	ditto
612	Herd, Alan L	Engineer, Mackintosh, Burn, Ld	8, Clive Street	ditto
613	Herridge, W J	Manager, Calcutta Claims Bureau	26, Dalhousie Square	ditto
614	Hetherington, E C	Manager, Grindlay & Co, Ld	6, Church Lane	ditto
615	Hewett, Harry Meiklan Prescott	Assistant, Andrew Yule & Co, Ld	8, Clive Row	ditto
616	Hewison, A	Superintending Engineer, I G N & Ry Co, Ld	4, Fairlie Place	ditto
617	Higgins, John	Stipendiary Steward, Royal Calcutta Turf Club	11, Russell Street	ditto
618	Higginson, J R	Accountant, Burmah Shell Co of India, Ld	Hongkong House	ditto
619	Highet, I H C	Accountant, Hongkong and Shanghai Banking Corpn	Hongkong House	ditto

620	Hill, F J	Asstt. Accountant, P & O Banking Corpn, Ld	1, Fairlie Place	ditto
621	Hill, Lancelot E	Accountant, David Sassoon & Co, Ld	4, Lyons Range	ditto
622	Hillier, Victor Florian	Assistant, Davenport & Co, Ld	6, Church Lane	ditto
623	Hines, Thomas Austin	Manager, American Express Co, Inc	14, Government Place, East	ditto
624	Hingston, Cecil Victor	Chief Valuer, Calcutta Improvement Trust	5, Clive Street	ditto
625	Hinton, Cyril Herbert, BSC	Assistant, Martin & Co	12, Mission Row	ditto
626	Hocken, Garth	Assistant, Bird & Co	1-1, Clive Street	ditto
627	Hodgson, John B	Director, Lionel Edwards, Ld	D-1, Clive Buildings	ditto
628	Hodgson, Richard Claud	Assistant, Sales Department, Imperial Tobacco Co of India, Ld	37, Chowringhee	ditto
629	Hodkinson, James	Engineer, Craven Bros (India), Ld	101, Clive Street	ditto
630	Hoerder, Paul Eugine Robert	Assistant, Bird & Co	1-1, Clive Street	ditto
631	Hogarth, Robert Robison	Assistant, James Finlay & Co, Ld	1, Clive Street	ditto
632	Hogben, Ernest James, MA (Oxon)	Principal, Calcutta Technical School	110, Surendra Nath Banerji Road	ditto
633	Hoggan, Thos	Engineer, Mackintosh Burn, Ld	8, Clive Street	ditto
634	Hoggan, W A	Assistant, Bird & Co	1-1, Clive Street	ditto
635	Hogshaw, F H	Superintending Engineer, Central Circle, P W D	Victoria House, Chowringhee Square	ditto
636	Hollies, A W C	Branch Manager, Pearl Assurance Co, Ld	8, Clive Street	ditto
637	Holloway, R B	Director, Hall & Anderson, Ld	31, Chowringhee	ditto
638	Holmes, Charles H	Managing Director, Holmes, Wilson & Co, Ld	Norton Buildings	ditto
639	Holt, Alfred Rayner	Resident Manager, Royal Exchange Assurance	1 & 2, Old Court House Corner	ditto
640	Homan, F T	Agent, C E S C, Ld	Victoria House	ditto

No.	Names.	Style or calling.	Residence or place of business.	Religion
641	Hood, Fredrick William Edward	Assistant, Andrew, Yule & Co, Ld	8, Clive Row	Christian
642	Hooper, C T G	Managing Director, Air Conditioning Corporation, Ld	8, Esplanade Mansions	ditto
643	Horton, G S	Partner, J Thomas & Co	8, Mission Row	ditto
644	Horton, W H F K	Assistant, Imperial Chemical Industries (India), Ld	18, Strand Road	ditto
645	Hosie, Alexander Lindsay	Partner, Ziffo & Co	5, Garstins Place	ditto
646	Hossack, John	Manager, Harman & Co, Ld	11, Government Place	ditto
647	House, A H	Professor, Presidency College	86-1, College Street	ditto
648	Howe, H	Deputy Chief Engineer, C E's Office, E I R	E I R House	ditto
649	Howell, Percy Poynton	Manager, Eagle Star & British Dominion Insurance Co, Ld	21, Strand Road	ditto
650	Howie, James Bruce	Manager, Fraser & Co, Ld	4, Fairlie Place	ditto
651	Hudson, G W	Asstt Manager, Norwich Union Fire Insce Socy, Ld	2, Hare Street	ditto
652	Huggett, C G	Assistant, Hall & Anderson, Ld	31, Chowringhee	ditto
653	Hughes, A R, F R G S	Resident Director, Commercial Pine Forests, Ld	4, Lyons Range	ditto
654	Hughes, J R	Assistant, Imperial Chemical Industries (India), Ltd	18, Strand Road	ditto
655	Hughff, R G	Supdt, Mech Records, C M E's Office, E I R	E I R House	ditto
656	Hull, F J	Supervising Director, Remington Rand Inc	3, Council House Street	ditto
657	Humby, A V	Assistant Controller of Inspection, Indian Stores Deptt	6, Esplanade East	ditto
658	Humphreys, H L	Actuary, National Insurance Co, Ld	7, Council House Street	ditto
659	Humphreys, Llewelyn Errington	Representative, Ralph Paxton	10, Lall Bazar	ditto
660	Hummer, James R	Sub-Accountant, National City Bank of New York	4, Clive Street	ditto

661	Hunt Natheniel Harvey	Manager, The Gas Accumulator Co. (India), Ld	12, Mission Row	ditto
662	Hunter, George William	Assistant, Accounting Department, Imperial Tobacco Co of India, Ld	37, Chowringhee	ditto
663	Hunter, Harry Claude Arnele	Manager and Underwriter, Commercial Union Assurance Co, Ld	32, Dalhousie Square	ditto
664	Hunter, R F	Director, Imperial Chemical Industries (India), Ld	18, Strand Road	ditto
665	Hunter, William	Manager, Gillanders, Arbuthnot & Co	8, Clive Street	ditto
666	Hurst, W H	Assistant, Shaw, Wallace & Co	4, Bankshall Street	ditto
667	Hutchinson, William	Resident Partner, Ford, Rhodes, Thornton & Co	Tower House, Chowringhee Square	ditto
668	Hutchison, Hugh Arbuckle	Engineer, Machine Tools (India), Ld	Stephen House	ditto
669	Hutson, Frederick Raymond	Director, The Britannia Biscuit Co, Ld	5, Dalhousie Square	ditto
670	Hutteroth, William Graham	Director, Morrison & Cottle, Ld	30C, Chowringhee	ditto
671	Hutton-Williams, Brent Elworthy	Manager, D J Keymer & Co, Ld	4, Lyons Range	ditto
672	Hyland, Frank George	Engineer, Bengal Telephone Corporation, Ld	8, Hare Street	ditto
673	Imrie, Kenneth Erskine	Joint Manager, Nestle & Anglo-Swiss Condensed Milk (Export) Co, Ld	9-A, Clive Street	Christian
674	Inglis, Fredrick	Assistant, Bird & Co	1-1, Clive Street	ditto
675	Inglis, James Alexander	Manager, James, Finlay & Co, Ld	1, Clive Street	ditto
676	Innes, Charles Alexander	Assistant, Andrew, Yule & Co, Ld	8, Clive Row	ditto
677	Ironside, W B	Director, Holmes Wilson & Co, Ld	Norton Buildings	ditto
678	Irvine, William S	Manager, Mackenzie, Lyall & Co	5, Mission Row	ditto
679	Irwin, R De V	Dy Chief Mech Engineer, E B Ry	3, Koilaghat Street	ditto

No.	Names.	Style or calling.	Residence or place of business.	Religion.
	J			
680	Jack, A	Assistant, Turner Morrison & Co, Ld	6, Lyons Range	Christian
681	Jackson, Frank Nicholson	Traffic Manager, Imperial Tobacco Co of India, Ld	37, Chowringhee	ditto
682	Jackson, Henry Kenneth	Assistant, Prudential Assce Co, Ld	Clive Buildings	ditto
683	Jackson, H L	Resident Secretary, London and Lancashire Insurance Co, Ld	2, Fairlie Place	ditto
684	Jacob, J E	Assistant, Remington Rand Inc	3, Council House Street	Jew
685	Jacques, William Alan Innes	Assistant, Alliance Assurance Co	2, Hare Street	Christian
686	James, R H	Assistant Traffic Superintendent, Eastern Bengal Railway	3, Koilaghat Street	ditto
687	Jardine, A, DSC	Director, Jessop & Co, Ld	93, Clive Street	ditto
688	Jenkins, Dr Walter Allen, DSC	Spl Officer for Secondary Education	Writers' Buildings	ditto
689	Jenner, Charles Herbet	Assistant, Bird & Co	1-1 Clive Street	ditto
690	Jepson, Richard Ainslie	Secretary, Automobile Association, Bengal	40, Chowringhee	ditto
691	Jonah, Isaac	Assistant, Arnhold & Co, Ld	100, Clive Street	Jew
692	Johnson, A E	Assistant, Hall & Anderson, Ld	31, Chowringhee	Christian
693	Johnson, Arthur	Engineer, Bengal Telephone Corporation, Ld	8, Hare Street	ditto
694	Johnson, Charles Edgar	Manager, W H Harton & Co, Ld	5, Clive Ghat Street	ditto
695	Johnson, C J	Superintendent, Central Registry, E I R	E I R House	ditto
696	Johnson, Harry Howlett	Assistant, South British Insurance Co, Ld	5, Clive Street	ditto
697	Johnston, E D	Partner, H D Cartwright & Co	14, Clive Row	ditto
698	Johnston, Gavin Smith	Assistant, Place, Siddons & Gough	6, Lyons Range	ditto

699	Johnston, John Kidd	Partner, Macneill & Co	2, Fairlie Place	ditto
700	Johnstone, Eric Forber, Lt.-Col., RE	General Manager, Martin & Co	12, Mission Row	ditto
701	Joliffe, Alexander	Assistant, Macneill & Co	2, Fairlie Place	ditto
702	Jones, Alan Foster	Assistant, Asbestos Cement, Ld	135, Canning Street	ditto
703	Jones, E E	Bridge Engineer, E B R	3, Koilaghat Street	ditto
704	Jones, H G	Dy Chief Mechanical Engineer, E I R	E I R House	ditto
705	Jones, James	Manager, James, Finlay & Co, Ld	1, Clive Street	ditto
706	Jones, Merlin	Assistant Curator, Govt. Gardens	Eden Gardens	ditto
707	Jones, S L	Assistant, Price, Waterhouse, Peat & Co	B-4, Clive Buildings	ditto
708	Jones, W J	Chief Accounts Officer, E B R	3, Koilaghat Street	ditto
709	Judah, Emanuel Joseph	Director, Andrew, Yule & Co, Ld	8, Clive Row	Jew
710	Just, A H	Assistant, Price, Waterhouse, Peat & Co	B-4, Clive Buildings	Christian
	K			
711	Kay, James Reid	Manager, James, Finlay & Co, Ld	1, Clive Street	Christian
712	Keddie, Charles MacKay	Assistant, Ralli Bros, Ld	16, Hare Street	ditto
713	Keillar, John Ridley	Manager, Symonds & Co	11, Clive Street	ditto
714	Kellner, C V R	Superintendent, I G N Ry Co, Ld	Nimtalla Ghat	ditto
715	Kells, George Edward	Mains Engineer, C E S C, Ld	Victoria House	ditto
716	Kelly, F D	Manager, Dodge & Seymour, Ld	Tower House, Chowringhee Square	ditto
717	Kelly, H C	Director, C Lazarus & Co, Ld	18, Park Street	ditto
718	Kelly, W T	Assistant, McLeod & Co	28, Dalhousie Square	ditto

No.	Names.	Style or calling.	Residence or place of business.	Religion.
719	Kember, E W	Tea Buyer, Brooke Bond India, Ld	2, Metcalfe Street	Christian
720	Kenderdine, E R	Assistant, Reed Ward & Co	6, Lyons Range	ditto
721	Kendrick, C	Assistant, Gladstone Wyllie & Co	4, Fairlie Place	ditto
722	Kent, G C H	Partner, Kilburn & Co	4, Fairlie Place	ditto
723	Ker, John Stanley	Partner, Place, Siddons & Gough	6, Lyons Range	ditto
724	Kidd, George	Manager, The Indian School Supply Depot	Chittaranjan Avenue, South	ditto
725	Kidd, T	Superintendent, C M E's Office, E I R	E I R House	ditto
726	Kilsby, W E	Manager, Calcutta General Printing Co, Ld	300, Bowbazar Street	ditto
727	King, H	Director, Hoyle Robson, Barnett & Co (India), Ld	Tower House	ditto
728	King, M H	Executive Engineer, Port Commissioners' Office	Strand Road	ditto
729	King, Millar Lord	Secretary and Director, John King & Co, Ld	9, Prince Mansions, Middleton Row	ditto
730	King, S A	Manager (Produce), Grahams Trading Co (India), Ld	6, Lyons Range	ditto
731	King, Tom	Assistant Manager, Linotype and Machinery, Ld	21, Bowbazar Street	ditto
732	King, W W	Director, Air Conditioning Corporation, Ld	8, Esplanade Mansions	ditto
733	Kingcome, Charles	Assistant, Andrew, Yule & Co, Ld	8, Clive Row	ditto
734	Kinloch, D R	Agent, Chartered Bank of India, Australia & China	1-1, Clive Street	ditto
735	Kinsella, Herbert Joseph	Manager, Jost's Engineering Co, Ld	9B, Mercantile Buildings	ditto
736	Kirk, Joseph Benjamin	Sales Manager, Roneo, Ld	32-1, Dalhousie Square	ditto
737	Knight, George Ernest	Assistant, Prudential Assurance Co, Ld	Clive Buildings	ditto
738	Knights, S J	Accountant, Spencer & Co, Ld	32, Chowringhee	ditto

739	Knowles, Thos	Director, Don Watson & Co	19, British Indian Street	ditto
740	Knox, Archbald Septimers	Engineer, Scott & Saxby, Ld	19, British Indian Street	ditto
741	Korni, Michael Alexandravitch (Dr.)	Assistant, Bird & Co	1-1, Clive Street	ditto
	L			
742	Lacamp, Adrian	Assistant Superintendent, Mathematical Instrument Office, Survey of India.	15, Wood Street	Christian
743	Lagden, R B	Partner, McLeod & Co	28, Dalhousie Square	ditto
744	Laidlaw, J A	Assistant District Manager, Dunlop Rubber Co (India), Ld	42, Free School Street	ditto
745	Laing, D	Manager, D Gestetner (India), Ld	32, Grosvenor House	ditto
746	Laird, T H	Assistant, McLeod & Co	28, Dalhousie Square	ditto
747	Laird, William Duncan Shaw	Director, R Sim & Co, Ld	2, Clive Row	ditto
748	Lake, Charles James	Proprietor, J J C Bell	9, Clive Street	ditto
749	Lake, W G	Superintendent, I G N & Ry Co, Ld	4, Fairlie Place	ditto
750	Lancaster, C E A	Sales Manager, Stewart & Co, Ld	57, Park Street	ditto
751	Lander, George	Director, Walter, Bushnell, Ld	21, Old Court House Street	ditto
752	Lane, Francis John	Assistant Manager, T E Thomson & Co, Ld	9, Esplanade East	ditto
753	Lane, W E	Director, The Gas Accumulator Co (India), Ld	12, Mission Row	ditto
754	Lang, H M	Assistant, Mackinnon, Mackenzie & Co	16, Strand Road	ditto
755	Langham, E A	Manager, Aluminium Manufacturing Co, Ld	9, Clive Street	ditto
756	Lansdell, A L	Director, C Lazarus & Co	17, Park Street	ditto
757	Latimar, James	Assistant, Macneill & Co	2, Fairlie Place	ditto
758	Laurie, Joseph Henry	Assistant, Anderson, Wright & Co	22, Strand Road	ditto

No.	Names.	Style or calling.	Residence or place of business.	Religion.
759	Lavalette, W C	Partner, Dalhousie Shipping and Agency Co	Norton Buildings	Christian
760	Laver, Arthur Victor	Partner, Stewart & Co	8, Clive Street	ditto
761	Law, Ian McKay	Director, Moran & Co, Ld	4, Lyons Range	ditto
762	Lawton, Samuel Peter	Assistant Manager, F & C Osler, Ld	12, Old Court House Street	ditto
763	Leaber, Chester R	Manager, National City Bank of New York	4, Clive Street	ditto
764	Leake, Francis William	Manager, British Insulated Cables, Ld	2, Waterloo Street	ditto
765	Leake, W R	Assistant, Jessop & Co, Ld	93, Clive Street	ditto
766	Leathem, James Martin	Manager, Planters' Stores & Agency Co, Ld	11, Clive Street	ditto
767	Leckie, David John	Manager, James, Finlay & Co, Ld	1, Clive Street	ditto
768	LeCocq, Jaffrey Mellish	Partner, Sinclair & Co	5, Commercial Buildings	ditto
769	Lee, Clifford Harbour	Proprietor, C H Lee & Co	137, Canning Street	ditto
770	Lee-Emery, William Robert	Assistant, F W Heilgers & Co	1-1, Clive Street	ditto
771	Leeming, A J	Assistant, Shaw, Wallace & Co	4, Bankshall Street	ditto
772	Lees, F G	Director, H Hobbs & Co, Ld	9, Old Court House Street	ditto
773	Leeson, E B	Partner, R B Rodda & Co	2, Wellesley Place	ditto
774	Lee-Ure, John	General Manager, Roneo, Ld	32-1, Dalhousie Square	ditto
775	LeFeuvre, C O	Assistant Executive Engineer, Port Commissioners' Office	Strand Road	ditto
776	Leisk, J	Director, Guest, Keen, Williams, Ld	7, Council House Street	ditto
777	Leisk, John	Manager, Macbeth Brothers & Co, Ld	7, Council House Street	ditto
778	Lennie, Magnus Slater	Chief Accountant, C E S C, Ld	Victoria House	ditto

779	Leonard, L F	Managing Director, W Newman & Co, Ld	3, Old Court House Street	ditto
780	Levy, H C	Director, T E Bevan & Co, Ld	Grosvenor House	ditto
781	Lewis, Frank Vincent	Assistant, Martin & Co	12, Mission Row	ditto
782	Lewis, S R	Office Manager, United Artists Corpn of New York	Tower House	ditto
783	Lewis, W E	General Sales Manager, Remington Rand Inc	3, Council House Street	ditto
784	Lewis, W T	Assistant, Jessop & Co, Ld	93, Clive Street	ditto
785	Limboussi, George Constantine	Assistant, Ralli Bros, Ld	16, Hare Street	ditto
786	Little, Frederick Sinister	Director, Blackwood, Bryson & Co, Ld	2, Mangoe Lane	ditto
787	Littlejohn, James	Asstt Manager, The Indo-Burma Petroleum Co, Ld	8, Clive Street	ditto
788	Liversedge, Frederick George, ACA	Accountant, Martin & Co	12, Mission Row	ditto
789	Livingston, Alexander	Manager, Kalamazoo, Ld	2 & 3, Clive Row	ditto
790	Livingston, W MacCallum	Branch Manager, The Central Agency, Ld	2, Old Court House Corner	ditto
791	Llewellin, John Clarence	Bank Officer, Imperial Bank of India	Strand Road	ditto
792	Lloyd, G V	Director, Turner Morrison & Co, Ld	6, Lyons Range	ditto
793	Lock, W H (Capt.)	Partner, Breakwell & Co	44, Free School Street	ditto
794	Locke, Edwin Albert	Assistant, Lipton, Ld	9, Weston Street	ditto
795	Lockhart, A R E	Assistant, Gladstone, Wyllie & Co	4, Fairlie Place	ditto
796	Logan, Alex	Director, J D Jones & Co, Ld	8, Clive Street	ditto
797	Long, A L V	Asstt Manager, Babcock & Wilcox, Ld	4, Bankshall Street	ditto
798	Longair, David William	Assistant, Landale & Clark, Ld	11, Clive Street	ditto
799	Longbottom, J	Assistant, Balmer, Lawrie & Co, Ld	103, Clive Street	ditto
800	Longden, G J M, BA, LLB	Secretary, Imperial Chemical Industries (India), Ld	18, Strand Road	ditto

No.	Names.	Style or calling.	Residence or place of business.	Religion
801	Longfield, T C	Assistant, Andrew Yule & Co, Ld	8, Clive Row	Christian
802	Longland, John Perry	Director and Secretary, Alfred Herbert (India), Ld	13-3, Strand Road	ditto
803	Lonie, John	Manager, Ericsson Telephones Ld	21, Old Court House Street	ditto
804	Lord, R W	Manager, Golabarry (Jute Pressing) Co, Ld	244, Upper Chitpore Road	ditto
805	Lothrop, Mark Drew	Auditor, Ludlow Jute Co, Ld	7, Royal Exchange Place	ditto
806	Lowe, G C	Assistant, Burn & Co, Ld	12, Mission Row	ditto
807	Lowles, Maurice George Raymond	Assistant, Birkmyre Bros	8, Clive Row	ditto
808	Lowndes, Maurice Wyndham, BA (Oxon).	Assistant, Bombay Co, Ld	19, British Indian Street	ditto
809	Luke, H A	Partner, W Haworth & Co	1, Commercial Buildings	ditto
810	Luke, Norman R	Partner, James, Luke & Sons	7, Royal Exchange Place	ditto
811	Lunan, William John	Assistant, Allahabad Bank, Ld	6, Royal Exchange Place	ditto
812	Lush, Gerald Harding	Assistant, Gillanders, Arbuthnot & Co	8, Clive Street	ditto
813	Luson, H	Engineer, Bengal Telephone Corporation, Ld	8, Hare Street	ditto
814	Lutyens, F M B	Director, Geo Henderson & Co, Ld	101-1, Clive Street	ditto
815	Lyell, A L	Assistant, Shaw, Wallace & Co	4, Bankshall Street	ditto
816	Lyne, Edwin	Assistant, Hoare Miller & Co, Ld	5, Fairlie Place	ditto
817	Lyttelton, Stephen Clive	Manager, Gillanders, Arbuthnot & Co	8, Clive Street	ditto
	M			
818	Mabey, H A	Accountant, Hongkong & Shanghai Banking Corpn	Hongkong House	Christian.
819	MacCrimman, Alexander Gillies	Assistant, Macneill & Co	2, Fairlie Place	ditto

820	MacDonald, A R	Assistant, Burn & Co, Ld	12, Mission Row	ditto
821	MacDonald, P S	Assistant, Thomas Duff & Co, Ld	3, Clive Row	ditto
822	MacGillivray, Allistair	Assistant Accountant, National Bank of India, Ld	104, Clive Street	ditto
823	MacEwan, Walter Thompson	Assistant, Sinclair Murray & Co, Ld	6, Royal Exchange Place	ditto
824	MacGregor, George Gordon	Director, Davenport & Co, Ld	6, Church Lane	ditto
825	MacGregor, Gray J	Sub-Manager, Lloyds Bank, Ld	101-1, Clive Street	ditto
826	MacGregor, H D	Manager (Insurance), Graham's Trading Co (India), Ld	6, Lyons Range	ditto
827	MacGregor, James Malcolm Carmichael	Manager, Allahabad Bank, Ld	6, Royal Exchange Place	ditto
828	MacGregor, John Cameron	Manager, Jewell Export Filter Co	10, Clive Street	ditto
829	MacInnes, R G	Assistant, Place, Siddons & Gough	6, Lyons Range	ditto
830	Mackay, Cardew Frank, BA, ACA	Accountant, Martin & Co	12, Mission Row	ditto
831	Mackay, Hugh George Gordon	Assistant, Begg, Dunlop & Co, Ld	2, Hare Street	ditto
832	Mackenzie, Alexander Neill	Director, Begg, Dunlop & Co, Ld	2, Hare Street	ditto
833	Mackenzie-Mair, James, BA (Oxon)	Manager, United Steel Co (India), Ld	2, Avenue House, Chowringhee Square	ditto
834	Mackey, Leslie Frank	Branch Manager, Pearl Assurance Co, Ld	8, Clive Street	ditto
835	MacKie, Edward Reed	Journalist, *Statesman*, Ld	Statesman House	ditto
836	MacKrell, Gyles	Assistant, Octavius Steel & Co, Ld	14, Old Court House Street	ditto
837	MacLaren, Malise Julian	Assistant, Allahabad Bank, Ld	6, Royal Exchange Place	ditto
838	MacLean, E V	Research Officer, C C M's Office, E I R	E I R House	ditto
839	Macleay, Roderick Campbell	Accountant, Burmah Shell Co of India, Ld	Hongkong House	ditto
840	Macmillan, Anthony St Claire, BA (Cantab).	Assistant, Martin & Co	12, Mission Row	ditto
841	Macmillan David Fald	Assistant, Andrew Yule & Co. Ld	8, Clive Row	ditto

No.	Names.	Style or calling	Residence or place of business.	Religion
842	Macnab, Archibald Robert	Manager, Skefko Ball Bearing Co, Ld	11, Clive Street	Christian
843	Macpherson, C M	Assistant, Octavius Steel & Co, Ld	14, Old Court House Street	ditto
844	Macpherson, D H	Assistant, Place, Siddons & Gough	6, Lyons Range	ditto
845	Macpherson, Ian Alastair	Asstt Commercial Manager, C E S C, Ld	Victoria House	ditto
846	Maddison, B	Director, Henry Maddison, Ld	Mercantile Buildings	ditto
847	Maddison, E	Director, Henry Maddison, Ld	Mercantile Buildings	ditto
848	Maddison, E M	Director, Henry Maddison, Ld	Mercantile Buildings	ditto
849	Maddison, H	Director, Henry Maddison, Ld	Mercantile Buildings	ditto
850	Maguire, Colin Arthur	Chief Engineer (Elec), British Insulated Cables, Ld	2, Waterloo Street	ditto
851	Mair, J G	Deputy Chief Accountant, Port Commissioners' Office	Strand Road	ditto
852	Maitland, Frank	Director, Andrew, Yule & Co, Ld	8, Clive Row	ditto
853	Malcolm, E W G	Sub-Manager, Mercantile Bank of India, Ld	8, Clive Street	ditto
854	Malcolm, Robert Conacher	Offg Superintendent M I Office, Survey of India	15, Wood Street	ditto
855	Males, Arthur Joseph	Assistant, Prudential Assurance Co, Ld	Clive Buildings	ditto
856	Maliphant, George Stephen, BSc	Engineer, Martin & Co	12, Mission Row	ditto
857	Mallett, A B	Partner, Mackinnon, Mackenzie & Co	16, Strand Road	ditto
858	Mallett, G R L	Executive Engineer (Headquarters), E B R	3, Koilaghat Street	ditto
859	Malley, John	Manager, The Mirrlees Watson Co, Ld	28, Grosvenor House	ditto
860	Mallock, Brian Esmond, BA	Assistant, Gillanders, Arbuthnot & Co	8, Clive Street	ditto
861	Maloney, J C	Assistant, Grahams Trading Co (India), Ld	6, Lyons Range	ditto
862	Manasseh, Alexander	Resident	Suite 14, Palace Court, Kyd Street	ditto

863	Manasseh, Allen S	Partner, S Manasseh & Sons	D-5, Clive Buildings	ditto
864	Manasseh, Aslan	Director, Moran & Co Ld	4, Lyons Range	ditto
865	Manuel Robert Henry	Sr Superintendent, Reserve Bank of India	8, Council House Street	ditto
866	Marchant, H V	Executive Engineer, Workshops Electrical Division	Writers' Buildings	ditto
867	Marquis, Geoffray Charles	Partner, Blacker & Co	2, Clive Street	ditto
868	Marshall, Henry	Architect	1, Rawdon Street	ditto
869	Marshall, Robert Trusdale	General Manager, G F Playfair & Co	27-7, Waterloo Street	ditto
870	Martin, Albert Edwin	Advtg Manager, Imperial Tobacco Co of India, Ld	37, Chowringhee	ditto
871	Martin, F G S	Controller of Stores, E I R	E I R House	ditto
872	Martin, Gerald Ulrick, BA	Chief Clerk, C O P S Office, E I R	E I R House	ditto
873	Martin, T A	Assistant, Martin & Co	12, Mission Row	ditto
874	Martin, T L	Partner, Martin & Co	12, Mission Row	ditto
875	Maslem, Sydney John	Assistant, Prudential Assurance Co, Ld	Clive Buildings	ditto
876	Massy, Ereic Fitzgerald Francis	Assistant, W S Cresswell & Co	3, Clive Row	ditto
877	Matheson, C C	Assistant, Jessop & Co, Ld	93, Clive Street	ditto
878	Mathieson, T E	Assistant, Bengal Chamber of Commerce	2, Clive Street	ditto
879	Matthews, Bernard, FRI, BA	Partner, Ballardie, Thompson & Matthews	7, Old Court House Street	ditto
880	Matthews, Frank de C	Accountant, The National City Bank of New York	4, Clive Street	ditto
881	May, Albert J	Manager, Linotype and Machinery, Ld	21, Bowbazar Street	ditto
882	May, George Egerton	Mains Engineer, C E S C, Ld	Victoria House	ditto
883	May, N E	Engineer, Ingersoll Rand (India), Ld	15, Clive Street	ditto
884	May, Wilfred	Director, Moran & Co, Ld	4, Lyons Range	ditto
885	Maystre, George Lowndes	Testing Superintendent, C E S C, Ld	Victoria House	ditto

No	Names.	Style or calling	Residence or place of business.	Religion.
886	McBride, J B	Chief Inspector of Factories, Bengal	40-1A, Free School Street	Christian
887	McCann, N M	Partner, Perman & Hynd	9, Clive Street	ditto
888	McClelland, Dalton F	Associate General Secretary, National Council, Y M C A	5, Russel Street	ditto
889	McDonald, Hector	Director, Alfred Herbert (India), Ld	13-3, Strand Road	ditto
890	McDonald, Thomas	Manager, Standard Vacuum Oil Co	6, Church Lane	ditto
891	McDougal, P	Sr. Executive Officer, I G N & Ry Co, Ld	4, Fairlie Place	ditto
892	McEwen, E. J	Manager, Remington Rand Inc	3, Council House Street	ditto
893	McFarlane, J	Secretary, Octavius, Steel & Co, Ld	14, Old Court House Street	ditto
894	McGhie, Adrian	Assistant Accountant, Imperial Tobacco Co of India, Ld	37, Chowringhee	ditto
895	McGillivray, D G	Director, Holmes, Wilson & Co, Ld	Norton Buildings	ditto
896	McGlashan, E G	Director, Asbestos & Belting Co, Ld	2, Clive Ghat Street	ditto
897	McGregor, A	Chief Accountant, Shaw, Wallace & Co	4, Bankshall Street	ditto
898	McGregor, W M	Controller of Stores, E B R	3, Kaylaghat Street	ditto
899	McHaffie, A N E	Assistant, Shaw, Wallace & Co	4, Bankshall Street	ditto
900	McInnes, M C	P A to Secretary and Treasurer, Imperial Bank of India	Strand Road	ditto
901	McInnes, William McMillan	Deputy Assistant Manager, T E Thomson & Co, Ld	9, Esplanade East	ditto
902	McIntosh, Donald John Fishe	Chief Assistant, British Insulated Cables, Ld	2, Waterloo Street	ditto
903	McIntyre, John Francis Finch	Assistant, Gillanders, Arbuthnot & Co	8, Clive Street	ditto
904	McIntyre, William	Assistant, Macneill & Co	2, Fairlie Place	ditto
905	McIvor, D	Partner, Bright & McIvor	16, Chowringhee Road	ditto
906	Mckie, A G	Superintendent, I G N & Ry Co, Ld	4, Fairlie Place	ditto

907	McLaren, Alexander	Assistant, Duncan Bros & Co, Ld	101, Clive Street	ditto
908	McLatchie, A L	Director, Balmer, Lawrie & Co, Ld	103, Clive Street	ditto
909	McLean, G C	Managing Director, Roberts McLean & Co, Ld	101, Clive Street	ditto
910	McLean, William Adam Gardner	Director, Geo Miller & Co, Ld	7, Hastings Street	ditto
911	McLeod, Robert Harper	Assistant Manager, New Zealand Insurance Co, Ld	26, Dalhousie Square	ditto
912	McMinn, Alexander Cunningham	Acting Agent, The Central Agency, Ld	2, Old Court House Corner	ditto
913	McPherson, James	Assistant, Begg Dunlop & Co, Ld	2, Hare Street	ditto
914	Meadows, George Percy	Secretary, Royal Insurance Co, Ld	26 and 27, Dalhousie Square	ditto
915	Meakins, H W	Dy Traffic Manager, E B R	3, Koilaghat Street	ditto
916	Mealing, Kenneth William	Director, Andrew Yule & Co, Ld	8, Clive Row	ditto
917	Mellalieu, John Morton	Chief Accountant, Marshall Sons & Co (India), Ld	99, Clive Street	ditto
918	Mellis, A R	Director, Balmer, Lawrie & Co, Ld	103, Clive Street	ditto
919	Mellor, Robert Wood	Assistant, F W Heilgers & Co	1-1, Clive Street	ditto
920	Melville, Alexander Davie	Assistant, Bird & Co	1-1, Clive Street	ditto
921	Mendis, Vernon Welbourne	Sr Superintendent, Reserve Bank of India	8, Council House Street	ditto
922	Menhinick, E N	General Manager, Eastern Federal Union Insurance Co, Ld	9, Clive Street	ditto
923	Menzies, I D	Accountant, The P & O Banking Corporation, Ld	1, Fairlie Place	ditto
924	Menzies, Robert	Partner, Jardine Menzies & Co	14, Hare Street	ditto
925	Metaxa, Alexander	Assistant, Ralli Bros, Ld	16, Hare Street	ditto
926	Metcalfe T A	Tea Taster, Octavius Steel & Co, Ld	14, Old Court House Street	ditto
927	Methold, J H	Assistant, J Thomas & Co	8 Mission Row	ditto
928	Meudell, Edgar	General Manager and Secretary, A Milton & Co, Ld	156, Dharamtala Street	ditto
929	Meyer, Patrick Maurice Rose	Dy Chief Auditor, E B R	19, Theatre Road	ditto
930	Michael, J D	Secretary to Agent, E I R	E I R House	ditto

No.	Names.	Style or calling.	Residence or place of business.	Religion.
931	Middleton, Frank Leslie	Assistant, North British & Mercantile Insurance Co, Ld	101-1, Clive Street	Christian
932	Middleton, Percival Harold	Assistant, Mackenzie Lyall & Co	5, Mission Row	ditto
933	Mehigion, Simon	Headmaster, Armenian College and Philanthropic Academy	39, Free School Street	ditto
934	Mildren, R P	Sub-Agent, Chartered Bank of India, Australia and China	1-1, Clive Street	ditto
935	Miles, C W	Assistant, Shaw Wallace & Co	4, Bankshall Street	ditto
936	Miles, E A	Partner, Thos Seth Apcar & Co	8, Clive Street	ditto
937	Miles, Phillip Purpoint	Mains Engineer, C E S C, Ld	Victoria House	ditto
938	Millar, A	Accdt. Superintendent, Scottish Union and National Insurance Co	6, Lyons Range	ditto
939	Millar, G A	Director, Winter Bros	Mercantile Buildings	ditto
940	Millar, L G	Accountant, Octavius Steel & Co, Ld	14, Old Court House Street	ditto
941	Miller, John	Director, Moran & Co, Ld	4, Lyons Range	ditto
942	Miller, Samuel de Burgh	Director, Andrew Yule & Co, Ld	8, Clive Row	ditto
943	Miller, William George	Director, Geo Miller & Co, Ld	7, Hastings Street	ditto
944	Mills, Henry	Assistant, Hoare Miller & Co, Ld	5, Fairlie Place	ditto
945	Mills, Lionel	Jt Manager, Nestle & Anglo-Swiss Condensed Milk (Export) Co, Ld	9A, Clive Street	ditto
946	Milne, Eric Oswald	Partner, Sinclair & Co	5, Commercial Buildings	ditto
947	Milne-Robertson, C E L	Director, Turner Morrison & Co, Ld	6, Lyons Range	ditto
948	Milton, Morgan Busson	Managing Director, A Milton & Co, Ld	156, Dharamtala Street	ditto
949	Minto, James A	Assistant, Kilburn & Co	4, Fairlie Place	ditto
950	Mitchell, A H	Assistant, Jessop & Co, Ld	93, Clive Street	ditto
951	Mitchell, Allan Stephen	Actg Br Manager, Union Insurance Society of Canton, Ld	8, Clive Street	ditto
952	Mitchell, David	Partner, Lovelock & Lewes	4, Lyons Range	ditto

953	Mitchell, Edgar John	Director, Harman & Co, Ld	11, Government Place		ditto
954	Mitchell, Ernest David	Managing Director, Alfred Herbert (India), Ld	13-3, Strand Road		ditto
955	Mitchell, Thomas Watson	Partner, King Bros	102, Clive Street		ditto
956	Moncur, W B	Assistant, Andrew Yule & Co, Ld	8, Clive Row		ditto
957	Montgomery, A T	Accountant, Balmer Lawrie & Co, Ld	103, Clive Street		ditto
958	Montrose, C A	Office Superintendent, C M O's Office, E I R	E I R House		ditto
959	Moodie, Alan Ewan Stewart	Assistant Accountant, National Bank of India, Ld	104, Clive Street		ditto
960	Moodie, Oliver Steuart	Partner, King Bros	102, Clive Street		ditto
961	Moon, Geo Crammond	Director, Sinclair Murray & Co, Ld	6, Royal Exchange Place		ditto
962	Moon, Thomas James	Governing Director, Morrison & Cottle, Ld	30C, Chowringhee		ditto
963	Moore, C S	District Transportation Officer, B N R	2, Pretoria Street		ditto
964	Moore, Ernest Arthur	Executive Engineer, Dredger Division, P W D	3, Charnock Place		ditto
965	Moore, William Arthur	Director and Editor, *Statesman*, Ld	Statesman House		ditto
966	Mordecai, I E	Proprietor, David & Son	6, Short Street		Jew
967	Mordue, Leslie Howard	Assistant Manager, Litho Branch, Photo-Litho Office, Survey of India.	14, Wood Street		Christian
968	Morgan, I	Assistant, Balmer, Lawrie & Co, Ld	103, Clive Street		ditto
969	Morrison, R M	Partner, Innes Watson & Co	15, Clive Row		ditto
970	Morshead, J	Constituted Attorney, Turner Morrison & Co, Ld	6, Lyons Range		ditto
971	Morten, H, ABCI, BSC (Lond)	Assistant, Imperial Chemical Industries (India), Ld	18, Strand Road		ditto
972	Morton, George Bond	Partner, Bird & Co	1-1, Clive Street		ditto
973	Morton, Percy William	Branch Manager, Chloride Electrical Storage Co, Ld	4, Lyons Range		ditto
974	Mousell, L C	Managing Director, Mousell & Co, Ld	Mercantile Buildings		ditto

No.	Names.	Style or calling.	Residence or place of business.	Religion.
975	Mowat, Arthur, MA	Professor, Scottish Church College	4, Cornwallis Square	Christian
976	Muir, A W	Accountant, Heatly & Gresham, Ld	6, Waterloo Street	ditto
977	Muirden, A C	Branch Manager, G D Peters (India), Ld	10, Clive Street	ditto
978	Mulroney, C	Manager, J O'Hara Murray & Co (India)	100, Clive Street	ditto
979	Mundy, C Vyvian	General Manager, The Indian and Eastern Engineering Co, Ld	5, Mission Row	ditto
980	Munro, I F M	Manager, Associated Press of India	7, Hare Street	ditto
981	Murdoch, W	Secretary, Haji Ismail Sait & Sons, Ld	13, Park Street	ditto
982	Murphy, Allan Francis	Extra Assistant Superintendent No. 1 Drawing Office, Survey of India	13, Wood Street	ditto
983	Murray C	Cal Representative, Siemens Brothers & Co, Ld	8, Clive Street	ditto
984	Murray, G K	Assistant, F W Heilgers & Co	1-1, Clive Street	ditto
985	Murray, J A	Proprietor, James Murray & Co	5, Old Court House Street	ditto
986	Murray, J O'Hara, MI. Mech	Proprietor, J O'Hara Murray & Co	100, Clive Street	ditto
987	Murray, Victor William	Partner, Blacker & Co	2, Clive Street	ditto
	N			
988	Nagle, J N E	Research Officer, E B R	3, Koilaghat Street	Christian
989	Namey, J	Superintendent, Government Shipping Office	15-1, Strand Road	ditto
990	Natesan, L A, MA	Professor, Scottish Church College	4, Cornwallis Square	ditto
991	Nawe, S J	Director, Ivan Jones, Ld	8, Dalhousie Square, East	ditto
992	Neale, G H	Director, W Newman & Co, Ld	3, Old Court House Street	ditto
993	Nelson, F O Bond, BS	Secretary and Director, Ingersoll-Rand (India), Ld	15, Clive Street	ditto
994	Nethersole, John (Major)	Clerk of the Course, Royal Calcutta Turf Club	11, Russell Street	ditto

995	Newbery, C A	Principal, Armenian College	39, Free School Street	ditto
996	Newman, S C, ACA	Accountant, Howrah Iron Works (Martin & Co)	12, Mission Row	ditto
997	Newsum, N R	Manager, The Eastern Bank, Ld	9, Clive Street	ditto
998	Nicholl, C K	Director, Octavius, Steel & Co, Ld	14, Old Court House Street	ditto
999	Nicholls, Ernest James	Partner, Williamson, Magor & Co	4, Mangoe Lane	ditto
1000	Nicholson, A R	Proprietor, British Refrigerators	30-A, Chowringhee	ditto
1001	Nicoll, John Lynn	Assistant, Gillanders, Arbuthnot & Co	8, Clive Street	ditto
1002	Nicoll, William John	Engineer, Burmah Shell Co of India, Ld	Hongkong House	ditto
1003	Nicolson, K J	Partner, Gladstone, Wyllie & Co	4, Fairlie Place	ditto
1004	Nimmo, Thomas Bryce	Director, Duncan Brothers & Co, Ld	101, Clive Street	ditto
1005	Nissim, E	Managing Director, E Meyer & Co (1926), Ld	2, Clive Ghat Street	Jew
1006	Niven, J C	Director, D Millar & Co, Ld	28, Dalhousie Square, West	Christian
1007	Nolan, B E	Engineer, McGregor & Balfour, Ld	11, Clive Street	ditto
1008	Norcock, C V L (Commdr)	Dy Conservator, Port Commissioners' Office	Strand Road	ditto
1009	Norman, William James (Lt.-Colonel), MC RE	Officer in charge, Photo Litho Office, Survey of India	14, Wood Street	ditto
1010	North, B	Executive Engineer, Western Electrical Division	Writers' Buildings	ditto
1011	Norton, H R	Director, Hall & Anderson, Ld	31, Chowringhee	ditto
1012	Notley, L G	Partner, A W Figgis & Co	Clive Buildings	ditto
1013	Nougerede, F A De la	District Controller of Stores, E B R	3, Kaylaghat Street	ditto

O

1014	O'brien, Amos, MA	Master, St Xavier's College	30, Park Street	Christian
1015	O'brien, Ernest Clarence	Manager, George, Waller & Co	29, Dalhousie Square	ditto

No.	Names.	Style or calling	Residence or place of business.	Religion.
1016	O'Connor, H A	General Manager, United Artists Corporation of (New York)	Tower House	Christian
1017	Officer, Adam Smart	Assistant, F W Heilgers & Co	1-1, Clive Street	ditto
1018	Ogden, Frederick, Charles Dickerson	Manager, Lloyds Bank, Ld	37, Chowringhee	ditto
1019	Ogg, J A	Assistant, Kettlewell, Bullen & Co, Ld	21, Strand Road	ditto
1020	Oldrini, Basil Claude John	Branch Manager, Govan Bros, Ld	20, Park Street	ditto
1021	Oliver, Richard John	Assistant, Martin & Co	12, Mission Row	ditto
1022	Orange, William John	General Manager, English Elec Co, Ld	D4, Clive Buildings	ditto
1023	Ord, Thomas	Partner, Macneill & Co	2, Fairlie Place	ditto
1024	Ordish, J E	Director, George, Henderson & Co Ld	101-1, Clive Street	ditto
1025	Ormiston, Jose Forbes	Assistant, North British & Mercantile Insurance Co, Ld	101-1, Clive Street	ditto
1026	Ormond, John Evelyn	Partner, Normans, Ross & Co	3, Clive Street	ditto
1027	Orr, James	Partner, Lovelock & Lewes	4, Lyons Range	ditto
1028	Orr, N J R	Assistant, Mackinnon, Mackenzie & Co	16, Strand Road	ditto
1029	Ortner, Charles	Assistant, Hamilton & Co, Ld	8, Old Court House Street	ditto
1030	Ottignon, William Alexander	Assistant, Volkart Brothers	11, Clive Street	ditto
1031	Owen, Clive William	Manager, Britannia Batteries, Ld	Bharat Bhavan, Chittaranjan Avenue	ditto
1032	Owers, Bernard Charles	Director, Sinclair, Murray & Co, Ld	6, Royal Exchange Place	ditto
1033	Oxley, Edward	Surveyor, Lloyd's Register of Shipping	29, Dalhousie Square	ditto
	P			
1034	Padgett, George Arnold	Assistant, Blackwood, Bryson & Co, Ld	2, Mangoe Lane	Christian
1035	Page, Eric Howard	Chartered Accountant, Begg, Dunlop & Co, Ld	2, Hare Street	ditto

1036	Page, John Archibald, BA (Cantab)	Representative, Fairbairn, Lawson, Combe, Barbour, Ld	8, Clive Street	ditto
1037	Palmer, Charles Percy Scott	Manager, Kodak, Ld	17, Park Street	ditto
1038	Palmer, H W	Manager, Sales, Lipton, Ld	9, Weston Street	ditto
1039	Pape, Harold Randleson (Lt-Col)	Stipendiary Steward, Royal Calcutta Turf Club	11, Russell Street	ditto
1040	Park, Collin Brown	Assistant, Macneill & Co	2, Fairlie Place	ditto
1041	Park, Ernest Reginald	General Manager, I R G P & T W Co, Ld	7, Old Court House Street	ditto
1042	Parks, J A	Deputy Valuer, Calcutta Improvement Trust	5, Clive Street	ditto
1043	Parker, H N	Deputy Agent, Personnel, E B R	3, Koilaghat Street	ditto
1044	Parker T	Director, Imperial Chemical Industries (India), Ld	18, Strand Road	ditto
1045	Parker, W T C	Joint Manager, Lloyds Bank, Ld	101-1, Clive Street	ditto
1046	Parkhurst, C A	Manager, Macmillan & Co, Ld	294, Bowbazar Street	ditto
1047	Parkinson, Ernest	Manager, R B Rodda & Co	2, Wellesley Place	ditto
1048	Parkinson, J	Chief Engineer, C E S C, Ld	Victoria House	ditto
1049	Parr, J F	Superintendent, Thacker's Press & Directories, Ld	3, Esplanade East	ditto
1050	Parsons, Patrick John	Director, The Britannia Biscuit Co, Ld	5, Dalhousie Square	ditto
1051	Paterson, A	Manager, H H Robertson & Co	4, Lyons Range	ditto
1052	Paterson, C S	General Secretary, Y M C A	25, Chowringhee	ditto
1053	Paterson, E A	Assistant, Jardine, Skinner & Co	4, Clive Row	ditto
1054	Paterson, Robert Sinclair	Power Sales Engineer, C E S C, Ld	Victoria House	ditto
1055	Paterson, R W Weir	Partner, Jardine, Skinner & Co	4, Clive Row	ditto
1056	Paton, Andrew	Accountant, National Bank of India, Ld	104, Clive Street	ditto
1057	Paul, Gerard Henry	Partner, Piggott, Chapman & Co	6, Lyons Range	ditto

No.	Names.	Style or calling	Residence or place of business	Religion.
1058	Pawsey, E L (Lt Comdr)	2nd Assistant Conservator, Port Commissioners' Office	Strand Road	Christian
1059	Paxton, D S, MIEE	Manager, Daniel, Adamson & Co, Ld	5, Dalhousie Square	ditto
1060	Paxton, Ralph Ernest	Manufacturers Representative	10, Lall Bazar	ditto
1061	Pearce, C	Dy Agent (Organization), E I R	E I R House	ditto
1062	Pearce, Harry Felix, BA (Cantab)	Engineer, Callender's Cable & Construction Co, Ld	2, Pollock Street	ditto
1063	Pecker, C B	Genl Manager, T E Thomson & Co, Ld	9, Esplanade East	ditto
1064	Peddie, K	Dy Chief Engineer, E I R	E I R House	ditto
1065	Peebles, George	Assistant, Andrew Yule & Co, Ld	8, Clive Row	ditto
1066	Penberthy, W F	Managing Director, D Gestetner (India), Ld	Grosvenor House	ditto
1067	Penn, C E	Sales Manager, G E C (India), Ld	Magnet House, Chittaranjan Avenue (South)	ditto
1068	Penn, Geo O	Managing Director, George O Penn (India), Ld	22, Chowringhee	ditto
1069	Pennell, Vincent Edward	Assistant, Royal Insurance Co, Ld	26 & 27, Dalhousie Square	ditto
1070	Pepper, W R	Agent, Calcutta Tramways Co, Ld	7, Church Lane	ditto
1071	Peppercorn, Wm Haydon, BA (Cantab)	Asstt Manager, Burmah Shell Co of India, Ld	Hongkong House	ditto
1072	Perrin, Frank Hubert	Manager, New Zealand Insurance Co, Ld	26, Dalhousie Square	ditto
1073	Perry, B	Assistant Supdt, Bengal Chamber of Commerce	2, Clive Street	ditto
1074	Perry, John Raymond	Manager, J H Fenner & Co, Ld	Mercantile Buildings	ditto
1075	Perry, Thomas Charles	Mains Engineer, C E S C, Ld	Victoria House	ditto
1076	Peskett, Blanchard	Surveyor to Lloyds Register of Shipping	29, Dalhousie Square	ditto
1077	Peters, E C	Assistant, Andrew Yule & Co, Ld	8, Clive Row	ditto
1078	Petre, Bernard Francis	Partner, Martin & Co	12, Mission Row	ditto

1079	Philips G T	Branch Manager, Manufacturers Life Insurance Co	27, Dalhousie Square	ditto
1080	Pickering, F A	Sub-Accountant, The Eastern Bank, Ld	9, Clive Street	ditto
1081	Pilcher, Frank Hubert	Accountant, W T Henley's Telegraph Works Co, Ld	Old Court House Corner	ditto
1082	Pirrie, John Hamilton	Assistant Accountant, National Bank of India, Ld	104, Clive Street	ditto
1083	Plummer, R W	Partner, Plummer Bros & Co	5 & 6, Fancy Lane	ditto
1084	Plummer, W R W	Partner, Plummer Bros & Co	5 & 6, Fancy Lane	ditto
1085	Plumstead, Eric William	Branch Manager, Cox & Kings (Insurance), Ld	5, Bankshall Street	ditto
1086	Pollett, John Charles St Clair, VD	Extra Assistant Superintendent, No. 1 Drawing Office, Survey of India	13, Wood Street	ditto
1087	Pool, William Stark	Assistant Manager, American Express Co, Inc	14, Govt. Place, East	ditto
1088	Poole, Sidney Albert	Engineer, Alfred Herbert (India), Ld	13-3, Strand Road	ditto
1089	Porter, S H	Partner, Breakwell & Co	44, Free School Street	ditto
1090	Potter, George Edward	Accountant, Butterworth & Co (India), Ld	Chowringhee Square	ditto
1091	Potts, Frank	Main's Engineer, C E S C, Ld	Victoria House	ditto
1092	Powell, H O	Resident Secretary, Manufacturers Life Insurance Co	27, Dalhousie Square	ditto
1093	Pratt, Charles Harry	Director, Hamilton & Co, Ld	8, Old Court House Street	ditto
1094	Pratt, E B	Chairman and Managing Director, Imperial Chemical Industries (India), Ld	18, Strand Road	ditto
1095	Pratt, Edwin Basil	Assistant Manager, Army & Navy Co-operative Society, Ld	41, Chowringhee	ditto
1096	Preston, E B C	Chief Engineer, G E C (India), Ld	Magnet House, Central Avenue, South.	ditto
1097	Preston, E Frank	Assistant, Balmer, Lawrie & Co, Ld	103, Clive Street	ditto
1098	Preston, Thomas Henry	Accountant, W Newman & Co, Ld	3, Old Court House Street	ditto
1099	Price, Cormell Edward William	Partner, Normans, Ross & Co	3, Clive Street	ditto
1100	Price, H C	Assistant, Balmer, Lawrie & Co, Ld	103, Clive Street	ditto

No.	Names.	Style or calling.	Residence or place of business.	Religion.
1101	Price, K J D	Mg Director, The Muir Mills Co, Ld	25, Chowringhee	Christian
1102	Price, Leslie	Mains Engineer, C E S C, Ld	Victoria House	ditto
1103	Price, Walter Lumsden	Coml Manager, C E S C, Ld	Victoria House	ditto
1104	Price, William Edward	Manager, North British & Mercantile Insurance Co, Ld	101-1, Clive Street	ditto
1105	Prike, Frederic Barton	Partner, R B Rodda & Co	2, Wellesley Place	ditto
1106	Pugh, David Gwilliam	Assistant Commercial Manager, C E S C, Ld	Victoria House	ditto
1107	Pulley, Albert Edward	Manager, Worthington-Simpson, Ld	10, Clive Street	ditto
1108	Purcell, E M	Office Superintendent, C C M's Office, E I R	E I R House	ditto
1109	Pushong, Oscar Newman	Officer in charge, Map Record & Issue Office, Survey of India	13, Wood Street	ditto
1110	Pye, J M	Joint Controller, Indian Tea Licensing Committee, Bengal Chamber of Commerce.	2, Clive Street	ditto
	Q			
1111	Quartly, F J	Manager, Calcutta & Eastern Trading Co	Grosvenor House	Christian
1112	Quirke, John Patrick Francis	Assistant, Place, Siddons & Gough	6, Lyons Range	ditto
	R			
1113	Radford, Thomas Henry	Assistant Controller of Inspection, Indian Stores Department	6, Esplanade, East	Christian
1114	Radice, L W	Manager, Butterworth & Co (India), Ld	Avenue House	ditto
1115	Rainey, Geoffrey Allan	Assistant, Balmer, Lawrie & Co	103, Clive Street	ditto
1116	Ramsay, A R	Assistant, Shaw, Wallace & Co	4, Bankshall Street	ditto
1117	Ratcliffe, R H	Managing, Director, C Lazarus & Co	11, Stephen Court	ditto
1118	Read, Frank Joseph	Director, Hamilton & Co, Ld	8, Old Court House Street	ditto
1119	Read, George Crible	Chartered Accountant, George, Read & Co	Avenue House, Chowringhee Square	ditto
1120	Reece, H S	Proprietor, G F Playfair & Co	27-7, Waterloo Street	ditto

1121	Reed, J C	Secretary, Associated Electrical Industries (India), Ld	8, Clive Street	ditto
1122	Reed, J K S, MA	Professor, Scottish Church College	4, Cornwallis Square	ditto
1123	Reed, John Cameron	Asstt Manager, Burmah Shell Co of India, Ld	Hongkong House	ditto
1124	Rees, Edward Owen	General Manager, Minimax, Ld	Mercantile Buildings	ditto
1125	Reeve, Henry Charles	Assistant, Accounting Department, Imperial Tobacco Co of India, Ld	37, Chowringhee	ditto
1126	Reid, James	Proprietor, Llewelyn & Co	9-1, Waterloo Street	ditto
1127	Remfry, Douglas H, BE	Partner, Remfry & Son	Stephen House	ditto
1128	Remfry, W E Arnold	2nd grade assistant, Imperial Bank of India	Strand Road	ditto
1139	Rennie, John Stevenson	Director, Cobbold & Co, Ld	Norton Buildings	ditto
1130	Richardson, Bernard Ian	Assistant, Anderson, Wright & Co	22, Strand Road	ditto
1131	Richardson, F	Engineer, Lipton, Ld	9, Weston Street	ditto
1132	Richardson, John Henry Swain	Managing Director, Andrew, Yule & Co, Ld	8, Clive Row	ditto
1133	Riches, Alexander	Assistant, Lipton Ld	9, Weston Street	ditto
1134	Richmond, H W	Director, Brooke Bond (India), Ld	2, Metcalfe Street	ditto
1135	Rivaz, Charles Warwick	Contract Manager, Bengal Telephone Corporation, Ld	8, Hare Street	ditto
1136	Roberts, Frederick Graham, ACA	Partner, Graham Roberts & Co	5, Fairlie Place	ditto
1137	Roberts, Horace Robert	Assistant, Royal Exchange Assurance	1 & 2, Old Court House Corner	ditto
1138	Robertson, Andrew Cathro	Partner, Landale & Morgan	3, Fairlie Place	ditto
1139	Robertson, Ewart Gladstone	Partner, Pigott, Chapman & Co	6, Lyons Range	ditto
1140	Robertson, G S	P A to Chief Engineer, E I R	E I R House	ditto
1141	Robertson, J G D	Assistant, Morgan Walker & Co	2, Clive Ghat Street	ditto

No.	Names.	Style or calling	Residence or place of business.	Religion.
1142	Robertson, M	Dy Agent (Penl), E I R	E I R House	Christian
1143	Robey, P E	Engineer, K Ray & Brothers	6, Hastings Street	ditto
1144	Robinson, Cedric Arthur Betham	Assistant, Planters' Stores & Agency Co, Ld	11, Clive Street	ditto
1145	Robinson, J	Director, Maitland Craig, Ld	E-2, Clive Buildings	ditto
1146	Robson, M G	Constituted Attorney, Turner Morrison & Co, Ld	6, Lyons Range	ditto
1147	Rodda, H N	Works Manager, Stephens & Co, Ld	33, Bow Bazar Street	ditto
1148	Roddick, C I	Director, Jessop & Co, Ld	93, Clive Street	ditto
1149	Roger, A	Assistant, Bird & Co	1-1, Clive Street	ditto
1150	Rogers, Cornelius William	Assistant Engineer, Bengal Telephone Corporation, Ld	8, Hare Street	ditto
1151	Rogers, Sydney Walter	Assistant Accountant, National Bank of India, Ld	104, Clive Street	ditto
1152	Rooney, Frederick	Secretary, Bengal Telephone Corporation, Ld	8, Hare Street	ditto
1153	Rose, George	Inspector of Branches, Allahabad Bank, Ld	6, Royal Exchange Place	ditto
1154	Rose, John Charles	Deputy Chief Commercial Manager, E I R	E I R House	ditto
1155	Ross, J B	Sr Assistant, Shaw Wallace & Co	4, Bankshall Street	ditto
1156	Ross, James William	Managing Director, Walford Transport, Ld	71-73, Park Street	ditto
1157	Ross, W N	Sub-Accountant, The Eastern Bank, Ld	9, Clive Street	ditto
1158	Rossetti, F F, BSc	Secretary, Y M C A (Chowringhee Branch)	25, Chowringhee	ditto
1159	Rostron, Arthur Henry Cunliffe	Manager for India, Mulcott Belting Co, Ld	10, Government Place, East	ditto
1160	Rothera, George Howitt	Partner, Martin & Co	12, Mission Row	ditto
1161	Rouston, J W	Director, Jessop & Co, Ld	93, Clive Street	ditto

1162	Routledge, J	Superintending Engineer, Andrew Weir & Co	9, Clive Street	ditto
1163	Rowe, Charles	Mains Engineer, C E S C, Ld	Victoria House	ditto
1164	Rowe, E H	2nd Grade Assistant, Imperial Bank of India	Strand Road	ditto
1165	Rowley, J R	Chief Engineer, Port Commissioners' Office	Strand Road	ditto
1166	Roy, Oswald James, BA	Assistant, Williamson, Magor & Co	4, Mangoe Lane	ditto
1167	Rusbridge, Ernest Charles	Secretary, J C Duffus & Co, Ld	5, Fairlie Place	ditto
1168	Rusmussen, Frank John	Assistant, New Zealand Insurance Co, Ld	26, Dalhousie Square	ditto
1169	Russel, F D	Manager, Dorman Long & Co, Ld	8, Clive Street	ditto
1170	Russell, G D	Assistant, Kilburn & Co	4, Fairlie Place	ditto
1171	Russell, H W	Constituted Attorney, Standard Vacuum Oil Co	6, Church Lane	ditto
1172	Russell, James Smith Thompson	Assistant, James Finlay & Co, Ld	1, Clive Street	ditto
1173	Ruthven, J L	Partner, Landale & Morgan	3, Fairlie Place	ditto
1174	Ryan, Edward Patrick John	Secretary, Saturday Club, Ld	7, Wood Street	ditto
1175	Ryan, T J	Asstt Comml Manager, C C M's Office, E I R	E I R House	ditto
1176	Ryde, W S	Manager, P & O Banking Corporation, Ld	1, Fairlie Place	ditto

S

1177	Salmond, H G	Dy Agent and Secretary, E B R	3, Kaylaghat Street	Christian
1178	Sandys-Lumsdaine, Colin Cran	Assistant, Williamson, Magor & Co	4, Mangoe Lane	ditto
1179	Sassoon, D D	Manager to David Ezra	59, Ezra Street	Jew
1180	Sassoon, M A	Director, M A Sassoon & Sons, Ld	21, Old Court House Street	ditto
1181	Sassoon, R M	Director, M A Sassoon & Sons, Ld	21, Old Court House Street	ditto

No.	Names.	Style or calling.	Residence or place of business.	Religion.
1182	Saxby, Herbert Baber	Managing Director, Scott & Saxby, Ld	19, British Indian Street	Christian
1183	Sayer, J A	Electrical Engineer, Octavius Steel & Co, Ld	14, Old Court House Street	ditto
1184	Sayres, E H	Assistant, Carritt Moran & Co	9, Mission Row	ditto
1185	Scatcherd, James Frederick	Assistant, J B Norton & Sons, Ld	Norton Buildings	ditto
1186	Scobie, A (Capt)	Marine Superintendent, Andrew Weir & Co	9, Clive Street	ditto
1187	Scotson, Robert	Assistant, Anderson, Wright & Co	22, Strand Road	ditto
1188	Scott, A E	Assistant, Turner, Morrison & Co, Ld	6, Lyons Range	ditto
1189	Scott, G C	Director, Scott & Saxby Ld	19, British Indian Street	ditto
1190	Scott, H P	Assistant, Shaw, Wallace & Co	4, Bankshall Street	ditto
1191	Scott, I B W	Assistant, Mackinnon Mackenzie & Co	16, Strand Road	ditto
1192	Scott, J O	Partner, Perman & Hynd	9, Clive Street	ditto
1193	Scott, John	Director, Andrew Yule & Co, Ld	8, Clive Row	ditto
1194	Scott, John Rivers	Asstt Manager, Valvoline Oil Co	8, Clive Street	ditto
1195	Scott-Kerr, W F	Director, George Henderson & Co, Ld	101-1, Clive Street	ditto
1196	Scroggie, Thomas Willock	Manager, Scroggie Brothers	2, Clive Ghat Street	ditto
1197	Seager, F Carl	Manager, The Ocean Accident and Guarantee Corporation, Ld	39-1, Dalhousie Square	ditto
1198	Sealy, Henry Euston	Assistant to District Manager, Lloyds Bank, Ld	101-1, Clive Street	ditto
1199	Searle, Stephen	Assistant Accountant, National Bank of India, Ld	104, Clive Street	ditto
1200	Sevastopulo, Demetrius George	Assistant, Ralli Bros, Ld	16, Hare Street	ditto
1201	Shailer, T F C	Manager, May & Baker (India) Ld	11, Clive Street	ditto

1202	Sharpe, John Charles (Capt)	Office Superintendent, Martin & Co	12, Mission Row	ditto
1203	Sharpe, Leslie Howard	Manager, Planters' Stores and Agency Co, Ld	11, Clive Street	ditto
1204	Sharpe, Percival Andrew	Director, Great Eastern Exchange, Ld	29, Park Street	ditto
1205	Shaw, A A	Assistant, J Thomas & Co	8, Mission Row	ditto
1206	Shaw, F	Erection Superintendent, A Reyrolle & Co, Ld	12, Mission Row	ditto
1207	Shaw, W	Secretary, Aluminium Manufacturing Co, Ld	9, Clive Street	ditto
1208	Shearer, Allan Struthers	Partner, Mackenzie, Lyall & Co	5, Mission Row	ditto
1209	Shedden, Hamilton	Partner, Macneil & Co	2, Fairlie Place	ditto
1210	Shelley, Rowland Douglas	Resident Engineer, Belliss & Morcom, Ld	C6, Clive Buildings	ditto
1211	Sherman, H M	Partner, W Haworth & Co	1, Commercial Buildings	ditto
1212	Sherman, J R S (Capt)	Dy Superintendent, I G N & Ry Co, Ld	4, Fairlie Place	ditto
1213	Shircore, M H	Assistant, Turner, Morrison & Co, Ld	6, Lyons Range	ditto
1214	Shrosbree, A de Bois	Managing Director, Talbot & Co	Tower House, Chowringhee Square	ditto
1215	Shuttleworth, Edward Hugh	Partner, Normans Ross & Co	3, Clive Street	ditto
1216	Siddons, S	Assistant, W H Targett & Co	1, Commercial Buildings	ditto
1217	Siewart, John George	Assistant, Andrew Yule & Co, Ld	8, Clive Row	ditto
1218	Sillar, K G	Sales Manager, C E S C, Ld	Victoria House	ditto
1219	Silverwood, Herbert W AMIE	Assistant Engineer, (Inspection) Indian Stores Deptt	6, Esplanade, East	ditto
1220	Sim, G A S	Assistant, Andrew, Yule & Co, Ld	8, Clive Row	ditto
1221	Simpson, James Herbert	Salesman, Kalamazoo, Ld	2 &3, Clive Row	ditto
1222	Sinclair, D B	Assistant Manager, Union Insurance Society of Canton, Ld	8, Clive Street	ditto

No.	Names	Style or calling.	Residence or place of business.	Religion.
1223	Sitwell, S S H	Assistant, Jessop & Co, Ld	93, Clive Street	Christian
1224	Slater, A E	Manager, Herbert Son & Co (Cal.) Ld	Stephen House	ditto
1225	Sloan, Athol Galbraith, BA (Cantab.)	Assistant, Burmah Shell Co of India, Ld	Hongkong House	ditto
1226	Smal , E V	Manager, Associated Electrical Industries (India), Ld	8, Clive Street	ditto
1227	Small, F W	Genl Manager, K Ray & Brothers	6, Hastings Street	ditto
1228	Smart, John Nelson	Assistant, Landale & Clark, Ld	11, Clive Street	ditto
1229	Smith, Adam John Laorie	Sub-Accountant, The Eastern Bank, Ld	9, Clive Street	ditto
1230	Smith, Allan	Secretary, Andrew, Yule & Co, Ld	8, Clive Row	ditto
1231	Smith, Balfour	Partner, Macneill & Co	2, Fairlie Place	ditto
1232	Smith, C D	Assistant, Lovelock & Lewes	4, Lyons Range	ditto
1233	Smith, Charles Jupp	Engineer, Burmah Shell Co of India, Ld	Hongkong House	ditto
1234	Smith, H	Secretary, Remfry & Son	Stephen House	ditto
1235	Smith, Harvey Oswald	Accountant, The Eastern Bank, Ld	9, Clive Street	ditto
1236	Smith, H F	Assistant, Bombay Co, Ld	19, British Indian Street	ditto
1237	Smith, H G	Manager, A & S Henry & Co, Ld	7, Grosvenor House	ditto
1238	Smith, J N	Representative, Fairbairn, Lawson. Combe, Barbour, Ld	8, Clive Street	ditto
1239	Smith, Reginald John	Assistant, Asbestos Cement, Ld	135, Canning Street	ditto
1240	Smith. R T	Secretary and Accountant, Steuart & Co, Ld	57, Park Street	ditto
1241	Smith, Stanley Charles	Branch Manager, Employers' Liability Assurance Corporation, Ld	9, Clive Street	ditto
1242	Smith, Stuart Gordon	Assistant, Northern Assurance Co, Ld	7, Hare Street	ditto

1243	Smith, T J	Mg. Director, The Muir Mills Co, Ld	25, Chowringhee	ditto
1244	Smith, Udney Vane	Partner, Johnston & Hoffman	10, Chowringhee	ditto
1245	Smitheram, A E	Stores Superintendent, Andrew, Weir & Co	9, Clive Street	ditto
1246	Smyth, G C G	Assistant Supdt, Bengal Chamber of Commerce	2, Clive Street	ditto
1247	Smythe, Brian Keith Maddison	Manager, Thorne's, Ld	13, Ezra Mansions	ditto
1248	Snaith, John Frank	Managing Director, Hamilton & Co, Ld	8, Old Court House Street	ditto
1249	Sofer, Ellis	Assistant, Arnhold & Co, Ld	100, Clive Street	Jew
1250	Solomon, Ernest J	Landholder	16, Theatre Road	ditto
1251	Solomon, S E	Landholder	3, Moira Street	ditto
1252	Sommerfeld, A	Managing Director, Mousell & Co, Ld	Mercantile Buildings	Christian
1253	Soutar, William John	Managing Agent, Landale & Clark, Ld	11, Clive Street	ditto
1254	Sowter, Cyril Woodbury	Accountant, Martin & Co	12, Mission Row	ditto
1255	Spatz, Robert Felix Barnard	Resident Secretary, Liverpool, London & Globe Insurance Co, Ld	26, Dalhousie Square	ditto
1256	Speller, John Henry	Engineer, Bengal Telephone Corpn, Ld	8, Hare Street	ditto
1257	Spencer, Albert Pearson	Artist Engraver, Calcutta Mint	47, Strand Road	ditto
1258	Spencer, Mortimer Joseph Campbell	Head Assistant, Bengal Secretariat, Marine Department	Writers' Buildings	ditto
1259	Spooner, Charles Selwyn	Assistant, South British Insurance Co, Ld	5, Clive Street	ditto
1260	Spooner, Edwin George	Assistant, Martin & Co	12, Mission Row	ditto
1261	Sproat, S M	Director, Ingersoll, Rand (India), Ld	15, Clive Street	ditto
1262	Squarey, D N P	Director, Turner, Morrison & Co, Ld	6, Lyons Range	ditto
1263	Squire, E H H	Manager (Shipping), Grahams Trading Co Ld	6, Lyons Range	ditto

No.	Names.	Style or calling.	Residence or place of business.	Religion.
1264	Squire, L	Partner, A W Figgis & Co	8, Clive Street	Christian
1265	Stacey, E E	Ag Sub-Manager, National Bank of India, Ld	104, Clive Street	ditto
1266	Stanhope, H	Printing Superintendent, E I R	E I R House	ditto
1267	Stanton, Eric John Harrison	Assistant, James Finlay, & Co, Ld	1, Clive Street	ditto
1268	Stanton, T H	Wiggins, Teape & Alex Pirie (Export), Ld	6, Mangoe Lane	ditto
1269	Staples, Edward Henry	Partner, Stewart & Co	8, Clive Street	ditto
1270	Stapleton, F G	Engineer, William Jacks & Co	10, Clive Street	ditto
1271	Stapleton, John Rouse	Superintendent, Marconi International Marine Communication Co, Ld	5, Temple Chambers	ditto
1272	Stark, David Murray	Assistant, Macneill & Co	2, Fairlie Place	ditto
1273	Stark, J D	Assistant, Bird & Co	1-1, Clive Street	ditto
1274	Steer, W	Dy Traffic Manager, Port Commissioners	Strand Road	ditto
1275	Steerwood, H A	Sub-Manager Lloyds Bank, Ld	101-1, Clive Street	ditto
1276	Stein, J A AM, ICE	Superintending Engineer, Presidency Circle, P W D	Writers' Buildings	ditto
1277	Step, G E	Partner, J Mackillican & Co	21, Old Court House Street	ditto
1278	Stephen, G	Asstt Accountant, The P & O Banking Corpn, Ld	1, Fairlie Place	ditto
1279	Stephen, Robert George	Director, Standard Literature Co, Ld	13-1, Old Court House Street	ditto
1280	Stephens, J A	Assistant, Gladstone Wyllie. & Co	4, Fairlie Place	ditto
1281	Sterndale, Reginald Marcus	Agent, Imperial Bank of India	8, Clive Street	ditto
1282	Steuart, F C J	Partner, Jardine, Skinner & Co	4, Clive Row	ditto
1283	Stevens, Cecil Robert	Assistant, Ralli Bros, Ld	16, Hare Street	ditto

1284	Stevenson, Lawrence J	Engineer, Mackintosh, Burn, Ld	8, Clive Street	ditto
1285	Stevenson, Robert	Assistant, Gillanders Arbuthnot, & Co	8, Clive Street	ditto
1286	Stewart, Hugh Patrick	Assistant, Blackwood, Bryson & Co	2, Mangoe Lane	ditto
1287	Stewart, J A	Deputy Engineer, Calcutta Improvement Trust	5, Clive Street	ditto
1288	Stewart, Jas S	Manager, McGregor & Balfour, Ld	11, Clive Street	ditto
1289	Stewart, Redvers Buller	Managing Agent, Landale & Clark, Ld	11, Clive Street	ditto
1290	Stockes, C G	Offg. Assistant Commercial Manager, C C M's Office, E I R	E I R House	ditto
1291	Stoddard, W A	Assistant-in-charge, Staff Section, Imperial Bank of India	Strand Road	ditto
1292	Stokes, H G	Partner, Shaw, Wallace & Co	4, Bankshall Street	ditto
1293	Stokes, Noel Theodore	Assistant, Hamilton & Co, Ld	8, Old Court House Street	ditto
1294	Stokoe, C J L	Assistant, Bird & Co	1-1, Clive Street	ditto
1295	Stott, James	Tote Manager, Royal Calcutta Turf Club	11, Russell Street	ditto
1296	Strannack, Cecil Leslie	Partner, Sinclair & Co	5, Commercial Buildings	ditto
1297	Stratford, N R	Assistant Executive Engineer, Port Commissioners' Office	Strand Road	ditto
1298	Struth, David Leighton	Assistant Secretary, J. C Duffus & Co, Ld	5, Fairlie Place	ditto
1299	Stuart, H St. Clair	Assistant Surveyor, Lardner North & Co	8, Strand Road	ditto
1300	Studd, B C	Partner, J Thomas & Co	8, Mission Row	ditto
1301	Studd, Eric	Director, Alexander Jute Mills Co, Ld	8, Camac Street	ditto
1302	Studdert, T G	Director, Samuel Osborn (India), Ld	10, Clive Street	ditto
1303	Sturrock, George S	Br. Manager, North British Rubber Co, Ld	1, British Indian Street	ditto
1304	Sumner, F D C	Jetty Superintendent, Port Commissioners	Jetties	ditto
1305	Surrey J. C.	Manager, Harrisons & Crosfield, Ld	6, Church Lane	ditto

No.	Names.	Style or calling.	Residence or place of business.	Religion.
1306	Sutherland, J J B	Assistant, Bengal Chamber of Commerce	2, Clive Street	Christian
1307	Swam, J	Secretary, Motor Union Insurance Co, Ld	1 & 2, Old Court House Corner	ditto
1308	Swales, Terence Lindsay	Assistant, Ralli Bros, Ld	16, Hare Street	ditto
1309	Swanson, Ian Nicholas	Covenanted Assistant, Talbot & Co	Tower House, Chowringhee Square	ditto
1310	Swete, Gerald Frank	Engineer, Burmah Shell Co of India, Ld	Hongkong House	ditto
1311	Swinton, Thomas Swinhoe	Director, Shalimar Paint, Colour and Varnish Co, Ld	6, Lyons Range	ditto
1312	Syme, A H	Partner, A M Mair & Co	6, Royal Exchange Place	ditto
	T			
1313	Tanner, Thomas Reginald Oriel	Assistant, Williamson, Magor & Co	4, Mangoe Lane	Christian
1314	Tannock, James D	Accountant, Lionel Edwards, Ld	D-1, Clive Buildings	ditto
1315	Tayler M C	Managing Director, Carreras (India), Ld	20, Chowringhee	ditto
1316	Taylor, Alexander Hay	Assistant Manager, South British Insurance Co, Ld	5, Clive Street	ditto
1317	Taylor, Andrew William	Assistant, Macneill & Co	2, Fairlie Place	ditto
1318	Taylor, A O'D	Assistant, Reed, Ward & Co	6, Lyons Range	ditto
1319	Taylor, A T	Director, Great Eastern Hotel, Ld	1, 2, & 3, Old Court House St	ditto
1320	Taylor, James Niven	Assistant, Ralli Bros, Ld	16, Hare Street	ditto
1321	Taylor, R W	Dy Chief Engineer, E B R	3, Kaylaghat Street	ditto
1322	Taylor, W E	Dy Superintendent, Depositor's Deptt, Imperial Bank of India	Strand Road	ditto
1323	Taylor, W J B	Partner, Johnston & Hoffman	10, Chowringhee	ditto
1324	Taylor, W R I	Accountant, Mercantile Bank of India, Ld	8, Clive Street	ditto
1325	Telford, George Henry	Assistant, Commercial Union Assurance Co, Ld	32, Dalhousie Square	ditto

1326	Temple, Frederick Charles (CIE)	Patron, Williams and Temple	7, Old Court House Street	ditto
1327	Thacker, Maneklall Sankelchand	Assistant Superintendent, T/Deptt C E S C, Ld	Victoria House	ditto
1328	Thackrah, S C	Manager, Spencer & Co, Ld	32, Chowringhee	ditto
1329	Thibaut Ernest George	Mains Engineer, C E S C, Ld	Victoria House	ditto
1330	Thomas, C A	Accounts Officer, C A O's Office, E I R	E I R House	ditto
1331	Thomas, H C, BA	Dy Assistant Valuer, Calcutta Improvement Trust	5, Clive Street	ditto
1332	Thomas, H N	Partner, McLeod & Co	28, Dalhousie Square	ditto
1333	Thomas, M R C	Assistant, J Thomas & Co	8, Mission Row	ditto
1334	Thomas, P J P	Partner, J Thomas & Co	8, Mission Row	ditto
1335	Thompson, A J, A R I B A	Partner, Ballardie, Thompson & Matthews	7, Old Court House Street	ditto
1336	Thompson, Hartley William	Assistant, Ralli Bros, Ld	16, Hare Street	ditto
1337	Thompson, Richard Hilton Marler	Director, Standard Literature Co, Ld	13-1, Old Court House Street	ditto
1338	Thoms, R S	Partner, Innes, Watson & Co	15, Clive Row	ditto
1339	Thoms, S	Partner, Perman & Hynd	9, Clive Street	ditto
1340	Thomson, C	Proprietor, Burnet & Co	22, Canning Street	ditto
1341	Thorman, Christopher Mark	Manager, James, Finlay & Co, Ld	1, Clive Street	ditto
1342	Thornton, B, MIE	Assistant General Manager, Howrah Iron Works (Martin & Co)	12, Mission Row	ditto
1343	Thurston, Eric Algernon Carnaby	Assistant, Martin & Co	12, Mission Row	ditto
1344	Tindall, Charles Cuthbert Percy	Assistant, Place, Siddons & Gough	6, Lyons Range	ditto
1345	Todd, Andrew	Manager, Phipson & Co, Ld	1, Garstin Place	ditto
1346	Todd, Thos	Assistant, Balmer, Lawrie & Co, Ld	103, Clive Street	ditto
1347	Todrick, G A	Acting Agent, Hongkong and Shanghai Banking Corporation	Hongkong House	ditto

No.	Names.	Style or calling.	Residence or place of business.	Religion.
1348	Toft, W	Partner, Price, Waterhouse, Peat & Co	B-4, Clive Buildings	Christian
1349	Toogood, C W	P. A. to Ch Mechl. Engineer, E B R	3, Koilaghat Street	ditto
1350	Townend, H D	Partner, Shaw, Wallace & Co	4, Bankshall Street	ditto
1351	Troup, George	Mains Engineer, C E S C, Ld	Victoria House	ditto
1352	Tucker, A L B	Director, Standard Life Assurance Co	32, Dalhousie Square, South	ditto
1353	Tuckett, Frederick Hayce (Capt)	Marine Superintendent, I G N & Ry Co, Ld	4, Fairlie Place	ditto
1354	Tuckett, William Fothergill	Assistant, Gillanders, Arbuthnot & Co	8, Clive Street	ditto
1355	Tully, William Scarth Carlisle	Assistant, Gillanders, Arbuthnot & Co	8, Clive Street	ditto
1356	Turnbull, John Bruce	Director, Hoare, Miller & Co, Ld	5, Fairlie Place	ditto
1357	Turner, A W	Director, Bell's Asbestos and Engineering (India), Ld	10, Clive Street	ditto
1358	Tyrie, George Aitken	Resident	5, Rawdon Street	ditto
1359	Tytler, Philip	Secretary, Caledonian Printing Co, Ld	3, Wellesley Place	ditto
	U			
1360	Urquhart, Ernest	Assistant, Bird & Co	1-1, Clive Street	Christian
1361	Urquhart, William Hubert Walton	Assistant, Andrew, Yule & Co	8, Clive Row	ditto
1362	Utley, Walter Bennett	Chief Mechanical Engineer, Railway, Martin & Co	12, Mission Row	ditto
	V			
1363	Vandyke, Frederick Reginald	Manager, Photo Branch, Photo-Litho Office, Survey of India	14, Wood Street	Christian
1364	Venters, C W M	Import Superintendent, B I S N Co, Ld	8, Strand Road	ditto
1365	Vernal, M S	Engineer, M S Vernal & Co	Bharat Insurance Buildings, Calcutta	ditto

1366	Verrill, F D	Assistant, Balmer, Lawrie & Co, Ld	103, Clive Street	ditto
1367	Vessey, S J	Asstt Manager, John Dewar & Sons, Ld	12, Hare Street	ditto
1368	Vevers, E	Director, Asbestos Cement (India) Ld	135, Canning Street	ditto
1369	Vickers, H Eustace	Managing Director, The Indian and Eastern Engineering, Co, Ld	5, Mission Row	ditto
1370	Vincent, J D A	Superintending Engineer, Electrical Circle, Bengal	Writers' Buildings	ditto
1371	Vining, L E	Deputy C O P'S (Movement), EIR	E I R House	ditto
1372	Vipond, Vernon Kenneth	Assistant, Royal Exchange Assurance	1&2, Old Court House Corner	ditto
1373	Vlasto, Stephen John	Assistant, Ralli Bros, Ld	16, Hare Street	ditto
	W			
1374	Wainwright, Thomas Stanley	Bank Officer, Imperial Bank of India	3, Strand Road	Christian
1375	Walford, John Arthur Stewart	Partner, Blacker & Co	2, Clive Street	ditto
1376	Walker, Cyril Oscar	Assistant, Anderson, Wright & Co	22, Strand Road	ditto
1377	Walker, Harold	Managing Director, May & Baker (India), Ld	11, Clive Street	ditto
1378	Walker, James Robert Law	Manager, Alliance Assurance Co, Ld	2, Hare Street	ditto
1379	Walker, J R	Partner, McLeod & Co	28, Dalhousie Square	ditto
1380	Walker, Thomas	Partner, Thomas Walker & Co	6, Royal Exchange Place	ditto
1381	Walker, W A M	Partner, Barry & Co	2, Fairlie Place	ditto
1382	Walker, William John Barr	Manager, *Statesman*, Ld	Statesman House	ditto
1383	Wallace, Ivan Ronald	Sole Proprietor, Ivan Ronald Wallace	135, Canning Street	ditto
1384	Wallace, William	Assistant, Duncan Bros & Co, Ld	101, Clive Street	ditto
1385	Waller, George Dalrymple	Proprietor, George Waller & Co	29, Dalhousie Square	ditto
1386	Waller, Richard Garnett	Assistant, Davenport & Co, Ld	6, Church Lane	ditto

No.	Names.	Style or calling	Residence or place of business.	Religion.
1387	Walton, J R	Managing Director, John Walsh & Co (India), Ld	10, Clive Street	Christian
1388	Walton, P W	Assistant, Mather & Platt, Ld	7, Hare Street	ditto
1389	Walton, William	Travellor, Alfred Herbert (India), Ld	13-3, Strand Road	ditto
1390	Ward, A M	Offg Chief Engineer, Port Commissioners' Office	Strand Road	ditto
1391	Ward, R J D	Manager, John Dickinson & Co, Ld	6, Clive Row	ditto
1392	Wardley, A N	Partner, Kilburn & Co	4, Fairlie Place	ditto
1393	Ware, Gerald Oswald	Assistant, Andrew Yule & Co, Ld	8, Clive Row	ditto
1394	Warner, John Weston	Manager for India, Chloride Electrical Storage Co, Ld	4, Lyons Range	ditto
1395	Warren, Albert E	General Manager and Secretary, Humayan Properties, Ld	1, Humayan Place	ditto
1396	Warren, E J	General Manager, G E C (India), Ld	Magnet House, Chittaranjan Avenue, South	ditto
1397	Warren, P F S	Director, Jessop & Co, Ld	93, Clive Street	ditto
1398	Warren, William	Director, Martin & Co	12, Mission Row	ditto
1399	Warren-Boulton, A	Director, Machine Tools (India), Ld	Stephen House	ditto
1400	Warren-Boulton, C	Managing Director, Machine Tools (India), Ld	Stephen House	ditto
1401	Waterfield, J E	Assistant, Shaw, Wallace & Co	4, Bankshall Street	ditto
1402	Waters, John Henry	Mains Superintendent, C E S C, Ld	Victoria House	ditto
1403	Watkins, A C	Accountant, Chartered Bank of India, Australia & China	1-1, Clive Street	ditto
1404	Watkins, W S	Office Superintendent, E B R	3, Koilaghat Street	ditto
1405	Watson, E F	Superintendent, Governor's Estates, Bengal	6, Wellesley Place	ditto
1406	Watson, Fred Godfrey	Manager, English Electric Co, Ld	D-4, Clive Buildings	ditto

1407	Watson, James Buchan	Manager, Corn Products Co. (India), Ld.	4, Lyons Range	ditto
1408	Watson, J D	Executive Engineer, Canals Division	Treasury Buildings	ditto
1409	Watson, R M	Asstt Executive Engineer, E I R	E I R House	ditto
1410	Watson, Thomas Hart	Branch Manager, Glenfield & Kennedy, Ld	4, Fairlie Place	ditto
1411	Watson, William Bonar	Assistant, Andrew Yule & Co, Ld	8, Clive Row	ditto
1412	Watt, D C	Branch Manager, General Accident, Fire & Life Assurance Corporation, Ld	7, Hare Street	ditto
1413	Watt, J J	Offg L G S Officer C-O P S, E I R	E I R House	ditto
1414	Watters, W J	Distt Elec Engineer, E I R	E I R House	ditto
1415	Watts, F C	Director, Associated Instrument Manufacturers (India) Ltd	B-5, Clive Buildings	ditto
1416	Waugh, G	Superintendent, C M E's Drawing Office, E I R	E I R House	ditto
1417	Webb, Gilbert Murray	Director, J Boseck & Co, Ld	16-5, Chowringhee	ditto
1418	Webb, H F	Manager, J Boseck & Co, Ld	16-5, Chowringhee	ditto
1419	Webb, John Urquhart	Assistant, Hoare Miller & Co, Ld	5, Fairlie Place	ditto
1420	Webber, J W	Manager, Phœnix Assurance Co, Ld	28, Dalhousie Square	ditto
1421	Webster, A	Executive Engineer, Port Commissioner's Office	Strand Road	ditto
1422	Wells, John George Lancaster	Assistant, Sales Department, Imperial Tobacco Co of India, Ld	37, Chowringhee	ditto
1423	Weston, L J T	Mains Engineer, C E S C, Ld	Victoria House	ditto
1424	Whaley, F B	Asstt Comml Manager, E I R	E I R House	ditto
1425	Wharton, A F	Partner, Thomas Walker & Co	6, Royal Exchange Place	ditto
1426	Wharton, Frederick	Manager, Valvoline Oil Co	B-5, Clive Buildings	ditto
1427	Wheeler, C D	Partner, Innes, Watson & Co	15, Clive Row	ditto
1428	Wheeler, W T	Offg Dy Chief Engineer, Port Commissioners' Office	Strand Road	ditto

No.	Names.	Style or calling.	Residence or place of business.	Religion.
1429	Wheldou, Robert Joseph	Director, Houghton-Butcher (Eastern), Ld	10, Hungerford Street	Christian
1430	White, C G	Director, Ever Ready (India) Co	5, Garstin Place	ditto
1431	White, Ernest	Director, Elford Edwards, Ld	7, Old Court House Street	ditto
1432	White, Ernest Frank	Mechanical Engineer, T E Thomson & Co, Ld	9, Esplanade, East	ditto
1433	White, E H	Proprietor, Davite Co	29, Waterloo Street	ditto
1434	White, Philip	Director, British Insulated Cables, Ld	2, Waterloo Street	ditto
1435	White, S W	Bridge Engineer, E I R	E I R House	ditto
1436	Whitehorn, Fredrick George	Accountant, Minimax, Ld	Mercantile Buildings	ditto
1437	Whiteside, Walter Bingham	District Manager, Dunlop Rubber Co (India), Ld	42, Free School Street	ditto
1438	Whitting, Richard	Accountant, Davenport & Co, Ld	6, Church Lane	ditto
1439	Whitney, V L	Assistant General Manager, Standard Vacuum Oil Co	6, Church Lane	ditto
1440	Whyte, George Clark	Assistant, Williamson, Magor & Co	4, Mangoe Lane	ditto
1441	Whyte, M M	Assistant, Turner, Morrison & Co, Ld	6, Lyons Range	ditto
1442	Whyte, W M	Assistant, Thos Duff & Co, Ld	3, Clive Row	ditto
1443	Wickham, R S	Secretary to Agent, Calcutta Tramways Co, Ld	7, Church Lane	ditto
1444	Widgery, C	Assistant, Turner, Morrison & Co, Ld	6, Lyons Range	ditto
1445	Wiffen, Charles Arthur	Director, Ranken & Co, Ld	4, Old Court House Street	ditto
1446	Wiggins, S	Tea Manager, Lipton, Ld	9, Weston Street	ditto
1447	Wilkins, C F W B	Assistant Manager, Government of India Press	8, Hastings Street	ditto
1448	Wilkinson, George	Representative, Fairbairn Lawson Combe Barbour, Ld	8, Clive Street	ditto

1449	Wilkinson, G H	Manager, Bell's Asbestos and Engineering (India), Ld	10, Clive Street	ditto
1450	Wilks, N	Manager, Mercantile Bank of India, Ld	8, Clive Street	ditto
1451	Wilks, N A	Director, Brooke Bond India, Ld	2, Metcalfe Street	ditto
1452	Will, A C F	Stores Buyer, Brooke Bond India, Ld	2, Metcalfe Street	ditto
1453	Williams, F C	Accountant, Octavius, Steel & Co, Ld	14, Old Court House Street	ditto
1454	Williams, Frederick George	Director & General Manager, Hukumchand Electric Steel Co, Ld	30, Clive Street	ditto
1455	Williams, G Bransby	Partner, Williams and Temple	7, Old Court House Street	ditto
1456	Williams, Montague	Manager, G Atherton & Co (Eastern), Ld	8, Clive Street	ditto
1457	Williams, Theodore Mark	Assistant, James Finlay & Co, Ld	1, Clive Street	ditto
1458	Williams, Tom Henry	Asstt Manager, J H Fenner & Co, Ltd	Mercantile Buildings	ditto
1459	Williams, Owen R	Director, Guest, Keen, Williams, Ld	7, Council House Street	ditto
1460	Williamson, Charles	Assistant, Gillanders, Arbuthnot & Co	8, Clive Street	ditto
1461	Williamson, James	Manager (Grocery), Army & Navy Stores, Ld	41, Chowringhee	ditto
1462	Williamson, Patrick Hay	Assistant, Williamson, Magor & Co	4, Mangoe Lane	ditto
1463	Williamson, R	Manager, Pioneer Consolidated Co (India), Ld	84, Clive Street	ditto
1464	Williamson, R W	Director, Standard Literature Co, Ld	13-1, Old Court House Street	ditto
1465	Willis, R H	Director, Carreras (India), Ld	20, Chowringhee	ditto
1466	Willmer, Eric John	Assistant, Bird & Co	1-1 Clive Street	ditto
1467	Wilson, D	Director, Andrew, Yule & Co, Ld	8, Clive Row	ditto
1468	Wilson, E	Manager, Carrier Engineering Co, Ld (London)	12, Mission Row	ditto
1469	Wilson, E B	Assistant, Jessop & Co, Ld	93, Clive Street	ditto
1470	Wilson, E D	Genl Manager, Carrier Engineering Co, Ld (London)	12, Mission Row	ditto

No.	Names.	Style or calling.	Residence or place of business.	Religion.
1471	Wilson, George Maxwell	Assistant, Gillanders, Arbuthnot & Co	8, Clive Street	Christian
1472	Wilson, James, BSc	Engineer, Burmah Shell Company of India, Ld ..	Hongkong House	ditto
1473	Wilson, J	Assistant Superintendent, Port Commissioners' Jetties ..	Jetties	ditto
1474	Wilson, J	Mg Director. Dunlop Rubber Co (India), Ld	42, Free SchoolStreet	ditto
1475	Wilson, John	Journalist, Statesman, Ld	Statesman House	ditto
1476	Wilson, John Lockhart	Manager, Lewis & Tylor, Ld	6, Church Lane	ditto
1477	Wilson, J R . ..	Partner, J Thomas & Co	8, Mission Row	ditto
1478	Wilson, J W K	Assistant, Shaw, Wallace & Co	4, Bankshall Street	ditto
1479	Wilson, M	Director, Willas Construction Co, Ld	19, Chowringhee	ditto
1480	Wilson, Ronald Westaway ..	Joint Manager, Nestle & Anglo-Swiss Condensed Milk (Export) Co, Ld.	9-A, Clive Street	ditto
1481	Wilson, R T	Managing Director, Refrigerators (India), Ld	24-B, Park Street	ditto
1482	Wilson, R W	Jt. Manager, Nestles & Anglo-Swiss Condensed Milk (Export) Co, Ld.	9-A, Clive Street	ditto
1483	Wilson, Thomas Alexander ..	Assistant Manager, Bengal Iron Co, Ld	4, Lyons Range	ditto
1484	Wise, Arthur Arnold	Assistant, Andrew, Yule & Co, Ld	8, Clive Row	ditto
1485	Withall, William	Assistant, Bird & Co	1-1, Clive Street	ditto
1486	Womack, Harold Athelstan, MA (Cantab)	Engineer, Martin & Co	12, Mission Row	ditto
1487	Wood, C	Director, Brooke Bond India, Ld	2, Metcalfe Street	ditto
1488	Wood, H. G	Dy Chief Engineer, C E S C, Ld	Victoria House	ditto
1489	Wood, John Fairley	Assistant, Allahabad Bank, Ld	6, Royal Exchange Place ..	ditto
1490	Woodhead, John Lawrence, BA (Cantab)	Assistant, Burmah Shell Company of India, Ld	Hongkong House	ditto
1491	Woolford, C R B	General Manager, Robt, Ingham, Clark & Co, Ld	2, Clive Row	ditto

1492	Wordsworth, William Christopher	Director & Asstt Editor, Statesman, Ld	Statesman House		ditto
1493	Worthington, Ralph Heron	Director, Andrew, Yule & Co, Ld	8, Clive Row		ditto
1494	Wright. Alex	Assistant, Anderson, Wright & Co	22, Strand Road		ditto
1495	Wright, A C	Director, Shalimar Paint C & V Co, Ld	6, Lyons Range		ditto
1496	Wright, Eric William	Manager, Northern Assurance Co, Ld	7, Hare Street		ditto
1497	Wright, Frederick Charles	Manager, Texas Co (India), Ld	11, Esplanade, East		ditto
1498	Wright, Johnston Steel	Assistant, Bengal Chamber of Commerce	2, Clive Street		ditto
	Y				
1499	Yeld, P H	Dy Traffic Manager, E B R	3, Koylaghat Street		Christian
1500	Young, Alexander Ogston	Assistant, F W Heilgers & Co	1-1, Clive Street		ditto
1501	Youngman, Reginald	Assistant, Williamson, Magor & Co	4, Mangoe Lane		ditto
1502	Younie, W J	Partner, Price, Waterhouse, Peat & Co	B-4, Clive Buildings		ditto
	A				
1503	Achar, V Srinivas	Assistant, Prudential Assurance Co, Ld	Clive Buildings		Hindu
1504	Achari, Gnanaprakasam	Accountant, Army Factory Accounts	6, Esplanade, East		ditto
1505	Acharya, Shailaja Prasanna, MA	Lecturer, Ripon College	24, Harrison Road		ditto
1506	Acharya, Susil Kumar, M Sc	Lecturer, University College	92, Upper Circular Road		ditto
1507	Addy, J C	Assistant, Prudential Assurance Co, Ld	Clive Buildings		ditto
1508	Addy, Kiran Chandra, MA, BA (OXON)	Professor, St Paul's College	33-1, Amherst Street		Christian
1509	Adhikari, M K	Assistant (2nd grade), Imperial Bank of India	Strand Road		Hindu
1510	Aditya, Subodh Kumar	Engineer, Builder and Contractor	8-2, Hastings Street		ditto
1511	Aditya, Sudhir Kumar	Engineer and Contractor	8-2, Hastings Street		ditto
1512	Agharkar, S P, M A, Ph D	Professor, University College	92, Upper Circular Road		ditto
1513	Ahmed, A	Manager, Kian Gwan Co (India), Ld	4, Lyons Range		Mahomedan

No.	Names.	Style or calling.	Residence or place of business.	Religion.
1514	Ahmed, Jamall, BA, SGO (Berlin)	Proprietor, " Optic Haus "	11, Esplanade, East	Mahomedan
1515	Ahmed, Kazimuddin, MA	Professor, Islamia College	8, Wellesley Street	ditto
1516	Ahmed, Maqbul	Professor, Presidency College	86-1, College Street	ditto
1517	Ahmed, Mominuddin	Head Assistant, Bengal Secretariat, P W D	Writers' Buildings	ditto
1518	Ahmed, Muhammad Nizamuddin	Assistant Engineer, Indian Stores Deptt (Inspection)	8, Esplanade, East	ditto
1519	Ahmed, Qutabuddin (Maulvi)	Landholder	7, Maulvi Lane	ditto
1520	Ahmed, Tasaddak (Khan Bahadur), BA, BT	Special Officer, Primary Education, Bengal	Writers' Buildings	ditto
1521	Aikat, Amulya Charan, MA, BL	Professor, Vidyasagar College	39, Shankar Ghose Lane	Hindu
1522	Aiyer, N N	Accountant, Army Factory Accounts	6, Esplanade, East	ditto
1523	Ali, Abul Fiaz Muhammad Abdul	Keeper of the Records, Government of India	Treasury Buildings	Mahomedan
1524	Ali, Roushan, BA	Inspector of Schools, Education Deptt	Municipal Office	ditto
1525	Ali, S. Ashraff	Landholder	1, Kaiser Street	ditto
1526	Ali, Shaik Mustafa	Landholder	53, Elliot Road	ditto
1527	Ali, Syed Asghar, BA	Zamindar	4, Hyat Khan Lane	ditto
1528	Anis, Cadi Abul Moin Mohd, FRSA	Zamindar	126, Dharamtala Street	ditto
1529	Ali, Abdul, MA	Professor, St Xavier's College	30, Park Street	ditto
1530	Annaiyappan, S	Accountant, D A G P and T Office	7, Koilaghat Street	Hindu
1531	Asadulla, K M, BA	Librarian, Imperial Library	6, Esplanade, East	Mahomedan
	B			
1532	Bagchi, Haridas, MA, PhD	Lecturer, University College	Senate House	Hindu
1533	Bagchi, Kshitish Chandra, MA	Inspector of Schools, Education Deptt	Municipal Office	ditto

1534	Bagchi, Prabodh Chandra, MA, D LIT	Lecturer, University College	Senate House	ditto
1535	Bagchi, Shachin	Br Secretary, Lakshmi Insurance Co, Ltd	7, Esplanade, East	ditto
1536	Bagchi, Shashanka Shekhar	Lecturer, Presidency College	86-1, College Street	ditto
1537	Bajoria, Baijnath	Assistant, Shewdayal Ramjeedas	130, Mechuabazar Street	ditto
1538	Bajoria, Ramjidas	Banker and Merchant	130, Mechuabazar Street	ditto
1539	Bajpeyi, Bijaya Krishna	Director, Pacific Minerals, Ltd	100, Clive Street	ditto
1540	Bajpeyi, Prafulla Kumar	Director, Pacific Minerals, Ltd	100, Clive Street	ditto
1541	Bajpeyi, Srikrishna	Jt Managing Director, Pacific Minerals, Ltd	100, Clive Street	ditto
1542	Bajpeyi, Umapati, MA	Professor, Ripon College	24, Harrison Road	ditto
1543	Baksh, A F Nabi	Dy Assistant Valuer, Calcutta Improvement Trust	5, Clive Street	Mahomedan
1544	Baksh, Mahammad Maula (Khan Bahadur), BA	Assistant D P I for Mahomedan Education, Bengal	Writers' Buildings	ditto
1545	Bakshi, Jagannath	Assistant, Martin & Co	12, Mission Row	Hindu
1546	Bal, Gajendra Nath, MSc	Demonstrator, St Xavier's College	30, Park Street	ditto
1547	Bal, Surendra Nath, MSc	Curator, Botanical Survey of India	Indian Museum	ditto
1548	Banerji, Abani Kumar, MSc	Professor, Vidyasagar College	39, Shankar Ghose Lane	ditto
1549	Banerji, A C	Partner, A & N Banerjee & Co	84-A, Clive Street	ditto
1550	Banerji, A C	Asstt Account Officer, A-G's Office	Treasury Buildings	ditto
1551	Banerji, Adityapada, BA	Dy Asstt Controller, Army Factory Accounts	6, Esplanade, East	ditto
1552	Banerji, A N, MA, FRHS (London)	Resident	12, Telipara Lane	ditto
1553	Banerji, Amarendra Nath, MSc	Lecturer, Ripon College	24, Harrison Road	ditto
1554	Banerji, Amulya Chandra	Assistant Engineer-in-charge, E and D, Calcutta Corporation	Municipal Office	ditto
1555	Banerji, Anadi Nath, BE	Outfall Engineer, Calcutta Corporation	Municipal Office	ditto

No	Names.	Style or calling.	Residence or place of business.	Religion.
1556	Banerji, Arunendra Nath, BSc	Assistant, Martin & Co	12, Mission Row	Hindu
1557	Banerji, Atul Chandra	Sr Accountant, A-G's Office, Bengal	Treasury Buildings	ditto
1558	Banerji, Balai Chandra	Partner, The Eastern Japan Trading Co	8, Dalhousie Square, East	ditto
1559	Banerji, Banshi Bihari, BA	Assistant, Martin & Co	12, Mission Row	ditto
1560	Banerji, B C, MA	D A G, Accountant-General's Office, Bengal	Treasury Buildings	ditto
1561	Banerji, Benayendra Nath, MA	Professor, Vidyasagar College	39, Shankar Ghose Lane	ditto
1562	Banerji, Debjiban, MSc	Director, Kuver, Ld	84, Clive Street	ditto
1563	Banerji, Dasharati	Managing Director, Great Eastern Exchange, Ld	29, Park Street	ditto
1564	Banerji, Dhirendra Nath	Electrical Upper Subordinate, Govt. House, Calcutta	Government House	ditto
1565	Banerji, Dhirendra Nath, LCE	Extra Asstt Superintendent, No. 1, Drawing Office, Survey of India	13, Wood Street	ditto
1566	Banerji, Dinesh Chandra, BE	Insecure Building Inspector, Calcutta Corporation	Municipal Office	ditto
1567	Banerji, Durga Das, MSC.	Lecturer, Uuiversity College	92, Upper Circular Road	ditto
1568	Banerji, Durga Mohan	P W Sr Accountant, Accountant-General's Office, Bengal	Treasury Buildings	ditto
1569	Banarji, Fakirdas, MA	2nd Inspector of Schools, Presidency Division	40-1A, Free School Street	ditto
1570	Banerji, Girindranath	Head Master, Bowbazar High School	170, Bowbazar Street	ditto
1571	Banerji, Haridas, MSc	Demonstrator, Scottish Church College	4, Cornwallis Square	ditto
1572	Banerji, Haridas, BCom	Lecturer, Govt Commercial Institute	11, Hastings Street	ditto
1573	Banerji, Hari Prasanna, MA	Lecturer, University College	Senate House	ditto
1574	Banerji, Hiran Kumar, MA, B Litt (Oxon)	Professor, Presidency College	86-1, College Street	Christian
1575	Banerji, H S	Cashier, G E C (India), Ld	Magnet House, Chittaranjan Avenue, South	Hindu
1576	Banerji, Indu Bhusan, MA	Lecturer, University College	Senate House	ditto
1577	Banerji, Jagannath, BA	Senior Auditor, E B R	3, Koilaghat Street	ditto

1578	Banerji, Janaki Nath	Director, Great Eastern Exchange, Ld	29, Park Street	ditto
1579	Banerji, Jatindra Mohan, BCom	Accountant, Ltg Deptt, Calcutta Corporation	Municipal Office	ditto
1580	Banerji, Jatindra Nath	Building Surveyor, Calcutta Corporation	Municipal Office	ditto
1581	Banerji, J C	General Manager, J C Banerjee, Ld	20, Strand Road	ditto
1582	Banerji, J C	Partner, Mitra Banerjee & Co	7, Lyons Range	ditto
1583	Banerji, Jitendranath, MA	Lecturer, Calcutta University	Senate House	ditto
1584	Banerji, J N, AMAE	Engineer	26, Badurbagan Lane	ditto
1585	Banerji, K	Merchant	8, Canning Street	ditto
1586	Banerji, Kanailal, MA	Professor, St. Paul's College	33-1, Amherst Street	ditto
1587	Banerji, Kanailal	Supdt, Printing Superintendent's Office, E I R	E I R House	ditto
1588	Banerji, K D	Partner, Pigott Chapman & Co	6, Lyons Range	ditto
1589	Banerji, Kirtish Chandra, MA	Lecturer, Ripon College	24, Harrison Road	ditto
1590	Banerji, K P (Rai Sahib)	Asstt Secretary, Agent's Office, E B R	3, Kaylaghat Street	ditto
1591	Banerji, Kshirode Chandra, BE	District Building Surveyor, Calcutta Corporation	Municipal Office	ditto
1592	Banerji, Manmatha Nath	2nd Grade Assistant, Imperial Bank of India	Strand Road	ditto
1593	Banerji, Manmatha Nath, MSc	Lecturer, University College	Senate House	ditto
1594	Banerji, M N, BSc, BE	Engineer	17, Mangoe Lane	ditto
1595	Banerji, Nani Gopal, BSc, BE	Asstt Engineer, J C Banerjee, Ld	20, Strand Road	ditto
1596	Banerji, Narayan Chandra, MA, PhD	Lecturer, University College	Senate House	ditto
1597	Banerji, Nilambu Kanta, MSc	Partner, A & N Banerjee Co	84-A, Clive Street	ditto
1598	Banerji, Nirmal Kumar	Director, Messrs T N Banerji, Ld	6, Hastings Street	ditto
1599	Banerji, Panchu Gopal	Partner, Banerjee & Co	7, Swallow Lane	ditto

No.	Names.	Style or calling.	Residence or place of business.	Religion.
1600	Banerji, Pashupati	Sr Accountant, A-G's Office, Bengal	Treasury Buildings	Hindu
1601	Banerji, Phani Mohan	Proprietor, Campbell Printing Works	1, Lyons Range	ditto
1602	Banerji, Prabhat Nath	Partner, Martin & Co	12, Mission Row	ditto
1603	Banerji, Prabodh Chandra	Assistant, Martin & Co	12, Mission Row	ditto
1604	Banerji, Prabodh Chandra	Merchant	28, Clive Street	ditto
1605	Banerji, Pratap Chandra	Assistant, Martin & Co	12, Mission Row	ditto
1606	Banerji, R B, MA	Asstt Accountant-General, D A G P & T Office	7, Koilaghat Street	ditto
1607	Banerji, Rabindra Nath	Elec. Engineer, Port Commissioners' Jetties	Jetties	ditto
1608	Banerji, Rabindra Nath	Partner, A B D R & Co	25B, Swallow Lane	ditto
1609	Banerji, Rakhaldas	Auditor, Chief Auditor's Office, E I R	E I R House	ditto
1610	Banerji, Ramapati	Manager, Bengal Stores (Birla Bros, Ld)	8, Royal Exchange Place	ditto
1611	Banerji, R N, BE	Engineer	25, Dharamtala Street (Suite 4)	ditto
1612	Banerji, Sanat Kumar, BE	Insecure Building Inspector, Calcutta Corporation	Municipal Office	ditto
1613	Banerji, Santos Chandra	Stevedore	7, Swallow Lane	ditto
1614	Banerji, Santos Kumar, MSc	Lecturer, Bethune College	181, Cornwallis Street	ditto
1615	Banerji, Satyendra Nath, BSc, ACII	Secretary, National Insurance Co, Ld	7, Council House Street	ditto
1616	Banerji, S. C., BA	Director, Eureka Publicity Service	157B, Dharamtala Street	ditto
1617	Banerji, Shachin, BSc (Glas.), CPE, AMIE (Ind.)	Asstt Engineer, C I T	5, Clive Street	ditto
1618	Banerji, Shachindra Nath	Asstt. Accountant, Bengal Telephone Corporation, Ld	8, Hare Street	ditto
1619	Banerji, S N	Secretary, Kumar Bros & Co, Ld	14-15, Raja Woodmunt Street	ditto
1620	Banerji, S N, BA	Secretary, Union Bank of Bengal, Ld	5, Clive Row	ditto
1621	Banerji, S N, MA, GDA	Accountant	1 B, Old Post Office Street	ditto

1622	Banerji, S N, BSc (Glas)	Asstt Engineer, Calcutta Improvement Trust	5, Clive Street	ditto
1623	Banerji, S N	Manager, Bharat Printing Works	22, Sukea Lane	ditto
1624	Banerji, Sudhangsu Sekhar, BL	Head Assistant, Central Stationery Office	3, Church Lane	ditto
1625	Banerji, Sudhir Lal	Supdt & Acctt, Calcutta Improvement Trust	5, Clive Street	ditto
1626	Banerji, Surendra Chandra, MA, BSc	Professor, Presidency College	86-1, College Street	ditto
1627	Banerji, Surendra Chandra, BSc (Cal)	Asstt Engineer, (Inspection) Indian Stores Deptt	6, Esplanade East	ditto
1628	Banerji, Surendra Nath	P A to Chief Mining Engineer, Railway Board	1, Council House Street	ditto
1629	Banerji, Suresh Chandra, BA	Head Assistant, Historical Record Room	Writer's Buildings	ditto
1630	Banerji, Surjya Narayan	Assistant, C M E's Office, E I R	E I R House	ditto
1631	Banerji, Sushil Chandra, BA (*Rai Sahib*)	Head Assistant, Bengal Secretariat, Appointment Department	Writers' Buildings	ditto
1632	Banerji, Sushil Kumar, BE	Assistant Engineer, J C Banerjee, Ld	20, Strand Road	ditto
1633	Banerji, T N, BA, CE, MIE	Mang Director, J N Banerjee Ld	6, Hastings Street	ditto
1634	Bangur, Gobindlal	Partner, Mugneeram Bangur & Co	7, Lyons Range	ditto
1635	Banker, Manohar Shapuraji	Sub-Accountant, National City Bank of New York	4, Clive Street	Zoroastrian
1636	Baral, Anupchand	Landholder	9-1, Sikdarpara Street	Hindu
1637	Baral, A Pr	Landholder	9-1, Sikdarpara Street	ditto
1638	Baral, Dunia Lal	Landholder	21-2, Mohendra Gossain Lane	ditto
1639	Baral, F Ch	Landholder	9-1, Sikdarpara Street	ditto
1640	Baral, Gour Chand	Cashier, Imperial Tobacco Co of India, Ld	37, Chowringhee	ditto
1641	Baral, Kissen Chand	Director, The Prabartak Trading & Banking Co, Ltd	61, Bowbazar Street	ditto
1642	Baral, Nirmal Chandra	Landholder	8, Hidaram Banerjee Lane	ditto
1643	Barua, Beni Madhab, MA, D Litt	Professor, University College	Senate House	Buddhist

No.	Names.	Style or calling.	Residence or place of business.	Religion.
1644	Barua, R K, MA (Oxon)	Director, National Indian Life Insurance Co, Ld	12, Mission Row	Hindu
1645	Basak. Bhupendra Nath, MSc	Lecturer, Scottish Church College	4, Cornwallis Square	ditto
1646	Basak, Gagan Chandra	Engineer	14-3, Sovaram Basak Street	ditto
1647	Basak, Ganga Gobinda, MA	Demonstrator, Presidency College	86-1, College Street	ditto
1648	Basak, Radha Gobinda	Professor, Presidency College	86-1, College Street	ditto
1649	Basu, A	Chief Accountant, A B D R & Co	25B, Swallow Lane	ditto
1650	Basu, Abinash Chandra, MA	Professor, Sanskrit College	College Square	ditto
1651	Basu, A C, MB, DPH	Sanitary Officer, D IV, Calcutta Corporation	26, Nayan Chand Dutt Street	ditto
1652	Basu, Ajit Kumar	Managing Director, Medland Bose & Co, Ld	13-2, Old Court House Street	ditto
1653	Basu, A K	Asstt Dist Traffic Superintendent, E B R	3, Koilaghat Street	ditto
1654	Basu, Amarendra Nath	Inspector of Stores, Indian Stores Deptt (Inspection)	6, Esplanade, East	ditto
1655	Basu, Amiya Nihar	P A to Director-General of Commercial Intelligence	1, Council House Street	ditto
1656	Basu, Arabindaksa	Merchant	143, Dharamtala Street	ditto
1657	Basu, Arun Kumar BSc	Asstt Sub-Assessor, Calcutta Corporation	Municipal Office	ditto
1658	Basu, Atul Krishna	Deputy Assistant Valuer, Calcutta Improvement Trust	5, Clive Street	ditto
1659	Basu, Bhupendra Nath, BA	Assistant, Gillanders Arbuthnot & Co	8, Clive Street	ditto
1660	Basu, Bijaya Krishna	Resident, Laski & Laski, Manchester	70, Clive Street	ditto
1661	Basu, Binaya Bhusan, BE	Building Inspector, Calcutta Corporation	Municipal Office	ditto
1662	Basu, Bishnupada	Director, Bengal Waterproof Works, Ld	12, Chowringhee	ditto
1663	Basu, B K, BE	Engineer	4, Hastings Street	ditto
1664	Basu, Charu Chandra	Cashier, Barlow & Co	8, Clive Street	ditto

1665	Basu, Charu Chandra, BSc, BT	Vice-Principal, Education Department	Municipal Office	ditto
1666	Basu, Charu Chandra	Accountant, D A-G P & T Office	7, Koilaghat Street	ditto
1667	Basu, C R, BE	Engineer, S K Chakravarti, Ld	1-1A, Mission Row	ditto
1668	Basu, Dhirendra Nath	Partner, D N Bose & Co	12, Kalidas Sinha Lane	ditto
1669	Basu, D. M, M.A, B.Sc. PHD.	Professor, University College	92, Upper Circular Road	Brahmo
1670	Basu, G C, AMME	Proprietor, G C Basu & Co	34-19, Beadon Street	Hindu
1671	Basu, Gurugobinda, BA	Proprietor, G Basu & Co	3-1, Bankshall Street	ditto
1672	Basu, Haradhan	Decorator, Martin & Co	12, Mission Row	ditto
1673	Basu, Hrishikesh, MA	Professor, St. Paul's Cathedral College	33-1, Amherst Street	ditto
1674	Basu, Indra Kumar	Junior Auditor, E B R	1-1D, Nayaratna Lane	ditto
1675	Basu, J	Director, Villiers, Ld	F-3, Clive Buildings	ditto
1676	Basu, Jitendra Nath, MA	Accountant, Office of the Controller of Army Factory Accounts	6, Esplanade, East	ditto
1677	Basu, J K	Proprietor, Sanyal & Co	2, Bethune Row	ditto
1678	Basu, J K, BA	Landholder	11, Mahendra Gossain Lane	ditto
1679	Basu, Jogesh Chandra, BL	Assistant Secretary, The Bharat Insurance Co, Ld	Chittaranjan Avenue	ditto
1680	Basu, Jogindra Mohan, BA	Director, Bengal Waterproof Works, Ld	12, Chowringhee	ditto
1681	Basu, J N	Director, Villiers, Ld	F-3, Clive Buildings	ditto
1682	Basu, Jugal Kishore	Asstt. Cashier, Martin & Co	12, Mission Row	ditto
1683	Basu, Kalipada, BA	Head Assistant, Bengal Secretariat, Reforms Branch	Writers' Buildings	Brahmo
1684	Basu, Kalisadhan	Passing Officer, Imperial Bank of India	Strand Road	Hindu
1685	Basu, Kanon Bihari, MSc	Accountant, D A-G P & T Office	7, Koilaghat Street	ditto
1686	Basu, Mahimaranjan	Building Surveyor, Calcutta Corporation	Municipal Office	ditto
1687	Basu, Mahimohan, BA (Oxon)	Professor, Scottish Church College	4, Cornwallis Square	Christian
1688	Basu, M C	Partner, Bonard & Co	40, Strand Road	Hindu

No.	Names.	Style or calling.	Residence or place of business.	Religion.
1689	Basu, Manindra Mohan, MA	Lecturer, Calcutta University	Senate House	Hindu
1690	Basu, Nagendra Nath, MSC	Professor, Ripon College	24, Harrison Road	ditto
1691	Basu, Nani Gopal, BE	Chief Estimator and Draftsman, Chief Engineer's Department, Calcutta Corporation.	Municipal Office	ditto
1692	Basu, Narayan Das, MSC	Professor, Islamia College	8, Wellesley Street	ditto
1693	Basu, Narendra Mohan	Professor, Presidency College	86-1, College Street	ditto
1694	Basu, N C (*Rai Sahib*)	Superintendent, Office of the Private Secretary to H E the Governor of Bengal	Government House	ditto
1695	Basu, N G	Manager, Jewel & Co	18, Canning Street	ditto
1696	Basu, N N, MA	Chief Accountant, Calcutta Corporation	Municipal Office	ditto
1697	Basu, N N	District Manager, Manufacturers Life Insurance Co	27, Dalhousie Square	ditto
1698	Basu, Panna Lal	Merchant	62, Amherst Row	ditto
1699	Basu, Paritos, BE	Engineer	30-6-2, Madan Mitra Lane	ditto
1700	Basu, Pashupati	Manager, C C Shaha Ld	170, Dharamtala Street	ditto
1701	Basu, P C, BSC (Glas)	Executive Engineer, Drainage, Calcutta Corporation	Municipal Office	ditto
1702	Basu, P K, BSC	Assistant, P K Ghose & Co	100, Clive Street	ditto
1703	Basu, P K	Principal, Bangabasi College	25-1, Scott Lane	ditto
1704	Basu, P N	Director, Kuver, Ld	84, Clive Street	ditto
1705	Basu, Prabodh Ch	Officer, Hindusthan Co-operative Insurance Society, Ld	Hindusthan Buildings	ditto
1706	Basu, Praphulla Kumar, DSC,	Lecturer, University College	92, Upper Circular Road	ditto
1707	Basu, Rabindra Kumar	Deputy Treasurer, Reserve Bank of India	8, Council House Street	ditto
1708	Basu, Ranjit Kumar, ACA	Accountant, Martin & Co	12, Mission Row	ditto
1709	Basu, R K	Proprietor, Jewel & Co	18, Canning Street	ditto
1710	Basu, Santosh Kumar	Engineer, Bhattacharjee & Co	28, Pollock Street	ditto
1711	Basu, Sarajaksha, BSC	Merchant	143, Dharamtala Street	ditto

1712	Basu, Satish Chandra ..	.. Sub-Assessor, Calcutta Corporation	.. Municipal Office	.. .. ditto
1713	Basu, Satyapriya, B com (Lond)	.. Assistant, Martin & Co	.. .. 12, Mission Row	.. .. ditto
1714	Basu, S C ..	.. Manager, Indian National Industrial Co	.. .. 126, Dharamtala Street	.. .. ditto
1715	Basu, S C, BE, CE ..	.. Engineer	.. .. 4, Hastings Street	.. .. ditto
1716	Basu, Shailendra Nath, BA	.. Audit Officer, Calcutta University	.. .. Senate House	.. .. ditto
1717	Basu, Shishir Kumar ..	.. Editor and Proprietor, "Vagnadoot"	.. .. 198-1, Cornwallis Street	.. .. ditto
1718	Basu, Shishir Kumar, MA	.. Sub-Assessor, Calcutta Corporation	.. .. Municipal Office	.. .. ditto
1719	Basu, Shrihari ..	.. Accountant, W W Extension Department, Calcutta Corporation	Municipal Office	.. .. ditto
1720	Basu, Shrish Chandra ..	.. Landholder	.. .. 13, Balaram Majumdar Street	.. ditto
1721	Basu, S N ..	.. Landholder	.. .. 13, Hurro Lal Mitter Street	.. ditto
1722	Basu, S N ..	.. Partner, India Oil Co	.. .. Stephen House	.. .. ditto
1723	Basu, Sourendra Nath, MA	.. Accountant, Office of the Controller of Army Factory Accounts	.. 6, Esplanade, East	.. .. ditto
1724	Basu, Subodh Kumar ..	.. Branch Manager, International G E C (India), Ld	.. 13, Hare Street	.. .. ditto
1725	Basu, Sudhansu Kumar, MA	.. Professor, Vidyasagar College	.. .. 39, Shankar Ghose Lane	.. ditto
1726	Basu, Sudhir Chandra, MSc (Cal), BSc (Lond).	Engineer, Bhattacharjee & Co	.. .. 28, Pollock Street	.. .. ditto
1727	Basu, Suresh Chandra ..	.. Senior Accountant, Accountant-General's Office, Bengal	.. Treasury Buildings	.. .. ditto
1728	Basu, Sushil Kanta, BSc ..	.. Resident Secretary, The Great Eastern Life Assurance Co, Ld	.. 1, Royal Exchange Place	.. ditto
1729	Basu, Tara Charan, BA ..	.. Auditor, C A's Office, E I R.	.. .. E I R House	.. .. ditto
1730	Basu, Tulsi Charan, BA ..	.. Joint Managing Director, Pacific Minerals, Ld	.. .. 100, Clive Street	.. .. ditto
1731	Basu, Upendra Nath ..	.. Superintendent, Secretary's Office, Calcutta Corporation	.. Municipal Office	.. .. ditto
1732	Batabyal, Kalachand, BA	.. Superintendent, Metropolitan Institution (Main)	.. .. 39, Sankar Ghose Lane	.. .. ditto
1733	Batabyal, S S ..	.. Assistant Valuer, Calcutta Improvement Trust	.. .. 5, Clive Street	.. .. ditto

No.	Names.	Style or calling	Residence or place of business.	Religion.
1734	Batliboi, Sorab R	Incorporated Accountant, S R Batliboi & Co	1-B, Old Post Office Street	Zoroastrian
1735	Batra, Fateh Chanb, BSc (Edin)	Assistant Engineer (Inspection), Indian Stores Department	6, Esplanade East	Hindu
1736	Bedi, Bawa Ladha Singh	Director, Eastern Federal Union Insurance Co, Ld	9, Clive Street	Sikh
1737	Beed, Indrabhusan	Landholder	14, Srinath Das Lane	Hindu
1738	Bery, Atmaram	Partner, Bery Bros	15, Clive Street	ditto
1739	Bery, Paramanand	Partner, Bery Bros	15, Clive Ctreet	ditto
1740	Bhaduri, Amulya Chandra, MA	Secretary, Guranteed Relief Syndicate, Ld	14, Clive Street	ditto
1741	Bhaduri, B B, BSc	Manager, Holmes Wilson & Co, Ld	Norton Buildings	ditto
1742	Bhaduri, Jyotsna Shankar, MSc	Managing Director, Guranteed Relief Syndicate, Ld	14, Clive Street	ditto
1743	Bhaduri, Sadananda	Professor, Presidency College	86-1, College Street	ditto
1744	Bhagat, Manilal Maneklal	Assistant, Andrew Yule & Co, Ld	8, Clive Row	ditto
1745	Bhagat, M G	General Manager, Bengal Potteries, Ld	11, Rawdon Street	ditto
1746	Bhagat, Pheroomal Ghanshamdas BSc (Glas).	Assistant Controller of Purchase, Indian Stores Deptt	8, Esplanade East	ditto
1747	Bhanja, Jitendra Nath, BE	Insecure Building Inspector, Calcutta Corporation	Municipal Office	ditto
1748	Bhar, Gurudas, MSc	Professor, Presidency College	86-1, College Street	ditto
1749	Bharatia, D	Accountant, Central Stationery Store	14, Old Court House Lane	ditto
1750	Bhargava, Jagadish Prasad	Assistant, Andrew Yule & Co, Ld	8, Clive Row	ditto
1751	Bhasin, Brijlal	Accountant, Punjab National Bank, Ld	135-36, Canning Stret	ditto
1752	Bhaskaraiya, C, MA	Deputy Accountant-General, Accountant-Generals' Office	Treasury Buildings	ditto
1753	Bhattacharya, Aditya Chandra	Director, Standard Sanitary Agency, Ld	64, Bowbazar Street	ditto
1754	Bhattacharya, Amulya K, BA	Sub-Assessor, Calcutta Corporation	Municipal Office	ditto

1755	Bhattacharya, Arabinda	Confidential Stenographer, Agent's Office, E I R	E I R House		ditto
1756	Bhattacharya, Asoke Nath, MA	Lecturer, Calcutta University	Senate House		ditto
1757	Bhattacharya, Bhavabibhuti	Professor, Bangabasi College	85-1, Scott Lane		ditto
1758	Bhattacharya, Bhutnath	Resident Engineer, J C Banerjee, Ld	20, Strand Road		ditto
1759	Bhattacharya, Bijaya Krishna, MA	Lecturer, City College	102-1, Amherst Street		ditto
1760	Bhattacharya, Birendra Nath, BE	Constructional Engineer, Calcutta Corporation	Municipal Office		ditto
1761	Bhattacharya, Bireshwar	Asstt Manager, Universal Trading Union	9, Dalhousie Square		ditto
1762	Bhattacharya, Bishnu Charan, MA	Professor, Vidyasagar College	39, Shankar Ghose Lane		ditto
1763	Bhattacharya, Charu Chandra, MA	Accountant, D A-G, P & T Office	7, Koilaghat Street		ditto
1764	Bhattacharya Charu Chandra	Demonstrator, Presidency College	86-1, College Street		ditto
1765	Bhattacharya, Dhirendra Nath	Resident	15, Serpentine Lane		ditto
1766	Bhattacharya, D P	Proprietor, Bhattacharya & Co	11, Clive Row		ditto
1767	Bhattacharya, Durgamohan, MA	Professor, Scottish Church College	4, Cornwallis Square		ditto
1768	Bhattacharya, Dwijendra Nath, MA, BL	Professor, Vidyasagar College	39, Sankar Ghose Lane		ditto
1769	Bhattacharya, Girijapati, MSc	Manager, Adair, Dutt & Co, Ld	5, Dalhousie Square		ditto
1770	Bhattacharya, Gopal Chandra, MA	Accountant, D A-G, P & T Office	7, Koilaghat Street		ditto
1771	Bhattacharya, Gopinath, MA, PES	Lecturer, Bethune College	181, Cornwallis Street		ditto
1772	Bhattacharya, Gouri Kanta, MSc	Professor, Vidyasagar College	39, Shankar Ghose Lane		ditto
1773	Bhattacharya, Gouri Nath	Lecturer, Presidency College	86-1, College Street		ditto
1774	Bhattacharya, Harimohan	Asstt Accounts Officer, Accountant-General's Office, Bengal	Treasury Buildings		ditto
1775	Bhattacharya, I B	Asstt Audit Officer, C A's Office, E I R	E I R House		ditto
1776	Bhattacharya, Jatindra Nath, BA	Joint Editor, "Ananda Bazar Patrika"	1, Barman Street		ditto

No.	Names.	Style or calling.	Residence or place of business.	Religion.
1777	Bhattacharya, Jitendra N	Accountant, D A-G, P & T Office	7, Koilaghat Street	Hindu
1778	Bhattacharya, Jogendra Nath	Superintendent, Legislative Department, Bengal	Council House	ditto
1779	Bhattacharya, K, BE	Engineer	4, Hastings Street	ditto
1780	Bhattacharya, K	Branch Manager, The Great Eastern Life Assurance Co, Ld	1, Royal Exchange Place	ditto
1781	Bhattacharya, Kalidas, MA	Professor, Vidyasagar College	39, Shankar Ghose Lane	ditto
1782	Bhattacharya, Keshab Chandra	Sub-Accountant, Imperial Bank of India	Strand Road	ditto
1783	Bhattacharya, Krishna Chandra, BE	Building Inspector, Calcutta Corporation	Municipal Office	ditto
1784	Bhattacharya, Lalit Mohan, MA	Head Master, Maharaja Cossimbazar Polytechnic Institute	1, Nanda Lal Bose Lane	ditto
1785	Bhattacharya, Manamohan, BSC	Superintendent, College Street Market	College Street Market	ditto
1786	Bhattacharya, N	Manager, A B D R & Co	25B, Swallow Lane	ditto
1787	Bhattacharya, Narendra Nath	Sub-Accountant, Imperial Bank of India	Strand Road	ditto
1788	Bhattacharya, Nibaran Chandra, MA, BSC.	Professor, Presidency College	86-1, College Street	ditto
1789	Bhattacharya, Nikunja Bihari (Rai Sahib).	A A Officer, A-G's Office, Bengal	Treasury Buildings	ditto
1790	Bhattacharya, Nirmal Chandra, MA, BL	Professor, Scottish Church College	4, Cornwallis Square	ditto
1791	Bhattacharya, Panchanan, MA	Lecturer, Bethune College	181, Cornwallis Street	ditto
1792	Bhattacharya, P C	Director, Associated Engineers, Ld	14, Clive Street	ditto
1793	Bhattacharya, Ramesh Chandra, BSC.	Managing Director, Standard Sanitary Agency, Ld	64, Bowbazar Street	ditto
1794	Bhattacharya, Rasamaya, MA	Professor, Scottish Church College	4, Cornwallis Square	ditto
1795	Bhattacharya, R N	Resident	15, Serpentine Lane	ditto
1796	Bhattacharya, S	Managing Agent, Bengal Luxmi Cotton Mills, Ld	28, Pollock Street	ditto
1797	Bhattacharya, Sachchidananda, MA	Lecturer, Sanskrit College	College Square	ditto

1798	Bhattacharya, Sachindra Mohan, BA	Managing Director, Calcutta National Bank, Ld	3 & 4, Hare Street		ditto
1799	Bhattacharya, Sanatan	Senior Auditor, E B R	3, Koilaghat Street		ditto
1800	Bhattacharya, Satish Chandra, MA	Lecturer, City College	102-1, Amherst Street		ditto
1801	Bhattacharya, Satish Ch, I	Accountant, D A-G, P & T Office	7, Koilaghat Street		ditto
1802	Bhattacharya, Satya Jiban, BL	Assistant Manager, Sitalprasad Kharagprasad	31, Burtolla Street		ditto
1803	Bhattacharya, Satyendranath, MA	Attendance Officer, Calcutta Corporation	Municipal Office		ditto
1804	Bhattacharya, Shiva Prasad	Lecturer, Presidency College	86-1, College Street		ditto
1805	Bhattacharya, S M, BA	Secretary, Indian Economic Insurance Co, Ld	15, Clive Street		ditto
1806	Bhattar, Bulaki Das	Partner, Sir Sarupchand Hukumchand & Co	30, Clive Street		ditto
1807	Bhattar, Sheokissen	Partner, Sir Sarupchand Hukumchand & Co	30, Clive Street		ditto
1808	Bhose, Gunendra Nath	Landholder	71-2, Cornwallis Street		ditto
1809	Bhose, Sarojendra Nath	Shroff, Hoare Miller & Co, Ld	5, Fairlie Place		ditto
1810	Bilimoria, B A	Director, Indian Cable Co, Ld	2, Waterloo Street		Zoroastrian
1811	Birla, G	Director, Birla Bros, Ld	8, Royal Exchange Place		Hindu
1812	Birla, G D	Director, Birla Bros, Ld	8, Royal Exchange Place		ditto
1813	Birla, J K	Director, Birla Bros, Ld	8, Royal Exchange Place		ditto
1814	Birla, L N	Director, Birla Bros, Ld	8, Royal Exchange Place		ditto
1815	Biswas, Anil Kumar	Partner, D N Biswas & Co	10, Dalhousie Square, East		ditto
1816	Biswas, Atal Kumar	Partner, Oriental Trading Co	84-A, Clive Street		ditto
1817	Biswas, Bipradas, BL	Head Assistant, Surveyor-General's Office	13, Wood Street		ditto
1818	Biswas, B K, BSc	Manager, Bengal Publicity Co	Stephen House		ditto
1819	Biswas, Chuni Lal	Partner, K C Biswas & Co	1, Chowringhee		ditto

No.	Names.	Style or calling.	Residence or place of business.	Religion.
1820	Biswas, Dasarathi	Partner, Oriental Trading Co	84-A, Clive Street	Hindu
1821	Biswas, Durgapada, MA	Lecturer, Ripon College	24, Harrison Road	ditto
1822	Biswas, J N, CE	Engineer	83-1, Upper Circular Road	ditto
1823	Biswas, J N	Assistant Branch Secretary, Oriental Government Security Life Assurance Co, Ld	2, Clive Row	ditto
1824	Biswas, Kshitish Chandra	Dy Assistant Valuer, Calcutta Improvement Trust	5, Clive Street	ditto
1825	Biswas, Nalini Mohan	Building Surveyor, Calcutta Corporation	Municipal Office	ditto
1826	Biswas, P, BE, CE	Engineer	4, Hastings Street	ditto
1827	Biswas, Priya Nath, MSc	Professor, Vidyasagar College	39, Shankar Ghose Lane	ditto
1828	Biswas, Sanat Kumar	Engineer and Proprietor, Bengal Engineering Syndicate	137, Canning Street	ditto
1829	Biswas, Saratlal, MSc	Lecturer, University College	92, Upper Circular Road	ditto
1830	Biswas, Satyapriya, MA	Professor, Scottish Church College	4, Cornwallis Square	Christian
1831	Biswas, S C	Personal Assistant to Deputy Chief Engineer, E B R	3, Koilaghat Street	Hindu
1832	Biswas, S N	Manager, Metropolitan Insurance Co, Ld	28, Pollock Street	ditto
1833	Biswas, Sudhabindu, MSc	Proprietor, Sun Optical Co	24-1, Cornwallis Street	Brahmo
1834	Biswas, Sudhir Ranjan, MA	Asstt Secretary, Bengal National Chamber of Commerce	2, Royal Exchange Place	Hindu
1835	Biswas, Surendra Nath	Sr Superintendent, Reserve Bank of India	8, Council House Street	ditto
1836	Borah, Ambikanath, MA	Assistant, Martin & Co	12, Mission Row	ditto
1837	Borah, Gobind Chand, BA	Secretary, Jute Balers' Association	5, Royal Exchange Place	ditto
1838	Brahma, Nalini Kanta	Professor, Presidency College	86-1, College Street	ditto
1839	Brahma, Nishi Kanta, MA, BL	Asstt Manager, Tagore Raj Estate	Tagore Castle	ditto
1840	Brahma, Tarapada, MA	Offg Accountant, D A-G, P & T Office	7, Koilaghat Street	ditto
1841	Butiwala, Munchershaw Maneckji	Accountant, Muller and Phipps (India), Ld	Avenue House, Chowringhee Square	Zoroastrian

C

1842	Chakladar, Haran Chandra, MA	Lecturer, University College	Senate House	Hindu
1843	Chakravarti, A C, MA, BL, ASAA, RA	Auditor, Chakravarti, Ghosh, Guha & Co	15, Clive Street	ditto
1844	Chakravarti, Bhupendra Nath, MA	Professor, City College	102-1, Amherst Street	ditto
1845	Chakravarti, Bhutnath, LCE	Director, Standard Engineering Co, Ld	13, Amherst Street	ditto
1846	Chakravarti, Binode Behari, BA, BL	Head Assistant, Current Record Room	Writers' Buildings	ditto
1847	Chakravarti, Brajendra Chandra, BA	Staff Assistant, Imperial Bank of India	Strand Road	ditto
1848	Chakravarti, Brajendra Nath, DSc (Dr)	Lecturer, University College	92, Upper Circular Road	ditto
1849	Chakravarti, D	Secretary, Calcutta Stock Exchange Association, Ld	7, Lyons Range	ditto
1850	Chakravarti, D D	Assistant Engineer, Port Commissioners' Office	Strand Road	ditto
1851	Chakravarti, Dhirendra Chandra, PhD	Vice-Principal, Ripon College	24, Harrison Road	ditto
1852	Chakravarti, Dinesh Chandra	Superintendent, Land Acquisition Office	5, Bankshall Street	ditto
1853	Chakravarti, D N, MA, BL, GDA	Auditor, Chakravarti, Ghosh, Guha & Co	15, Clive Street	ditto
1854	Chakravarti, Dwijendra Kumar	Cashier, Standard Life Assurance Co, Ld	32 & 32-1, Dalhousie Square	ditto
1855	Chakravarti, Gurupada, BL	Superintendent, Indian Art School	1, Gangadhar Babu Lane	ditto
1856	Chakravarti, Haricharan, BL	Manager, Bharat Insurance Co, Ld	Bharat Bhawan, Chittaranjan Avenue	ditto
1857	Chakravarti, Jatindra Nath, MA, BL	Head Master, Calcutta Academy	72, Amherst Street	ditto
1858	Chakravarti, J C, BCOM, GDA, RA	Auditor	162, Bowbazar Street	ditto
1859	Chakravarti, Jitendra Nath	Professor, Bangabasi College	25-1, Scott Lane	ditto
1860	Chakravarti, J M	Assistant Accounts Officer, D A-G, P & T Office	7, Koilaghat Street	ditto
1861	Chakravarti, Jogesh Chandra, MA	Audit Inspector, Calcutta Corporation	Municipal Office	ditto
1862	Chakravarti, Kalidas, MA	Professor, City College	102-1, Amherst Street	ditto
1863	Chakravarti, Khagendra Nath	Professor, Presidency College	86-1, College Street	ditto

No.	Names.	Style or calling.	Residence or place of business.	Religion.
1864	Chakravarti, Madhab Das, MA	Professor, Vidyasagar College	39, Shankar Ghose Lane	Hindu
1865	Chakravarti, Manaranjan	Accountant, Bengal Central Bank, Ld	86, Clive Street	ditto
1866	Chakravarti, M L, MSc	Manager, Co-operative Book Depot	54, College Street	ditto
1867	Chakravarti, Mukundalal	Professor, Bangabasi College	25-1, Scott Lane	ditto
1868	Chakravarti, Nirmal Chandra, MA	Lecturer, City College	102-1, Amherst Street	Brahmo
1869	Chakravarti, Panchanan, MA	Lecturer, Calcutta University	Senate House	Hindu
1870	Chakravarti, P N	Secretary, United India Life Assurance Co, Ld	2, Lyons Range	ditto
1871	Chakravarti, Ramchandra, MA	Head Master, Shambazar A V School	126, Shambazar Street	ditto
1872	Chakravarti, R C, MSc	Director, Calcutta Builders' Stores, Ld	62, Bowbazar Street	ditto
1873	Chakravarti, Samaresh, BSc	Secretary, Light of Asia Insurance Co, Ld	4 & 5, Dalhousie Square	ditto
1874	Chakravarti, Satish Chandra, MA	Lecturer, University College	Senate House	ditto
1875	Chakravarti, Satish Chandra, BSC	Asstt Collector, Calcutta Corporation	Municipal Office	ditto
1876	Chakravarti, Sharat Chandra, BE	Executive Engineer, W W Department, Calcutta Corporation	Municipal Office	ditto
1877	Chakravarti, Shyamapada	Professor, Bangabasi College	25-1, Scott Lane	ditto
1878	Chakravarti, S K, BE	Director, S K Chakravarti, Ld	1-1A, Mission Row	ditto
1879	Chakravarti, Sudhir Chandra, BE, CE, AMEE	Engineer & Contractor	7, Kailash Bose Street	ditto
1880	Chakravarti, Surendra Nath, MA	Lecturer, Sanskrit College	College Square	ditto
1881	Chakravarti, Tripurari, MA	Lecturer, University College	Senate House	ditto
1882	Chakravarti, Tulsidas	Assistant Commercial Manager, C C M's Office, E I R	E I R House	ditto
1883	Chand, Diwan (Verma)	Head Assistant, Surveyor-General's Office	13, Wood Street	ditto

1884	Chand, Tara	Partner, Lal Chand & Sons	76, Lower Circular Road	ditto
1885	Chand, Tek	Partner, Lal Chand & Sons	76, Lower Circular Road	ditto
1886	Chanda, Prakash Chandra, BA	Accountant, Imperial Bank (Burrabazar Branch)	195, Harrison Road	ditto
1887	Chandra, Basanta Behary, MA	Librarian, Calcutta University	Senate House	ditto
1888	Chattaraj, B N, BA	Accountant, E B R	3, Koilaghat Street	ditto
1889	Chattaraj, Durgagati, MA	Professor, Presidency College	86-1, College Street	ditto
1890	Chatterji, A B	Organising Officer, Metropolitan Insurance Co, Ld	28, Pollock Street	ditto
1891	Chatterji, A B, CE	Engineer	10, Hastings Street	ditto
1892	Chatterji, Ahibhusan (Rai Sahib)	Stenographer & Sr Council Reporter	Writers' Buildings	ditto
1893	Chatterji, Akshay Coomar	Zamindar	112, Amherst Street	ditto
1894	Chatterji, Amarnath, CE	Engineer, T N Banarji, Ld	6, Hastings Street	ditto
1895	Chatterji, Anath Bandhu	Superintendent, Council Section, Legislative Department, Bengal	Council House	ditto
1896	Chatterji, Anil Chandra	Asstt Manager, Scindia Steam Navigation Co, Ld	100, Clive Street	ditto
1897	Chatterji, A P	Sr. Assistant Engineer, Calcutta Improvement Trust	5, Clive Street	ditto
1898	Chatterji, Asoke, MA	Assistant Editor, *The Modern Review*	120-2, Upper Circular Road	Brahmo
1899	Chattarji, Asoke Chandra, BA (Cantab)	Agency Manager, The Bharat Insurance Co, Ld	Chittaranjan Avenue	Hindu
1900	Chatterji, B	Accountant, Calcutta Mint	47, Strand Road	ditto
1901	Chatterji, Bankim Chandra, BA	Head Master, Hare School	87, College Street	ditto
1902	Chatterji, B B	Partner, K C Day & Co	4, Mission Row	ditto
1903	Chatterji, Bhupendra Nath	Landholder	41, Kailas Bose Street	ditto
1904	Chatterji, Bijali Bhusan, MA, BL	Accountant, Office of the Controller of Army Factory Accounts	6, Esplanade East	ditto

No.	Names.	Style or calling.	Residence or place of business.	Religion.
1905	Chatterji, Bimal Kumar, MSC	Lecturer, Scottish Church College	4, Cornwallis Square	Hindu
1906	Chatterji, Bipin Bihari	Building Surveyor, Calcutta Corporation	Municipal Office	ditto
1907	Chatterji, B N	Treasurer, E I R	E I R House	ditto
1908	Chatterji, B N	Assistant Engineer, Port Commissioners' Office	Strand Road	ditto
1909	Chatterji, C B	Partner, P Chatterjee	7, Garstin Place	ditto
1910	Chatterji, Charu Chandra	Railway Cashier, Martin & Co	12, Mission Row	ditto
1911	Chatterji, D N	Director, Associated Engineers, Ld	14, Clive Street	ditto
1912	Chatterji, D P, B COM	Managing Director, Dairy Food Supply Co, Ld	87, Lower Circular Road	ditto
1913	Chatterji, Durga Charan, MA, PRS	Lecturer, Bethune College	181, Cornwallis Street	ditto
1914	Chatterji, Gokul Chandra	Landholder	41, Kailas Bose Street	ditto
1915	Chatterji, Gopal Chandra, BA	Accountant, Office of the Controller of Army Factory Accounts	6, Esplanade, East	ditto
1916	Chatterji, Haran Ch	Partner, N L Roy & Co	7, Lyons Range	ditto
1917	Chatterji, Haran Chandra, BA	Manager, Longmans Green & Co, Ld	6, Old Court House Street	ditto
1918	Chatterji, Hari Sadhan, MA, BL	Professor, Ripon College	24, Harrison Road	ditto
1919	Chatterji, Hiralal, BE	Building Surveyor, Calcutta Corporation	Municipal Office	ditto
1920	Chatterji, H K	Director, Dairy Food Supply Co, Ld	87, Lower Circular Road	ditto
1921	Chatterji, Indu Bhusan, BSC, BE	Engineer	21, Baghbazar Street	ditto
1922	Chatterji, J P	Assistant Engineer, Port Commissioners' Office	Strand Road	ditto
1923	Chatterji, Kalipada, MA, BL	Proprietor, Industrial Steel Works	29, Strand Road	ditto
1924	Chatterji, Kanai Lal	Partner, Bidhubhusan Chatterjee	43, Brajadulal Street	ditto
1925	Chatterji, Karunamaya	Merchant	41, Kailas Bose Street	ditto

1926	Chatterji, Kedar Nath, BSc	Assistant Editor, *The Modern Review*	120-2, Upper Circular Road	Brahmo
1927	Chatterji, Kiran Chandra	Joint Manager, Sen & Pandit	Mercantile Buildings	Hindu
1928	Chatterji, Kishori Mohan	Superintendent, Agent's Office, E I R	E I R House	ditto
1929	Chatterji, K L	Director, Dairy Food Supply Co, Ld	87, Lower Circular Road	ditto
1930	Chatterji, Krishna Dhan, MA	Director, The Prabartak Trading and Banking Co, Ld	61, Bowbazar Street	ditto
1931	Chatterji, Kshitish Chandra, MA	Lecturer, University College	Senate House	ditto
1932	Chatterji, Kshitish Prasad, MA (Cantab)	Education Officer, Calcutta Corporation	Municipal Office	ditto
1933	Chatterji, Manatos	Asstt. Engineer, Port Commissioners' Office	Strand Road	ditto
1934	Chatterji, Manindra Nath	Chief Clerk, C O S Office, E I R	E I R House	ditto
1935	Chatterji, Manmohan	Professor, Presidency College	86-1, College Street	ditto
1936	Chatterji, Nalini Kanta	Landholder	44, Amherst Street	ditto
1937	Chatterji, Nalini Mohan, MA	Lecturer, University College	Senate House	ditto
1938	Chatterji, Nepal Chandra	Accountant, C A O's Office, E I R	E I R House	ditto
1939	Chatterji, P, MSc	Office Superintendent, Zenith Life Assurance Co, Ld	Norton Buildings	ditto
1940	Chatterji, Panchanan	Manager, Continental Commercial Co	14-2, Old China Bazar Street	ditto
1941	Chatterji, Phani Bhusan, MA	Professor, St. Paul's Cathedral College	33-1, Amherst Street	ditto
1942	Chatterji, Phanibhusan, MA	Professor, City College	102-1, Amherst Street	ditto
1943	Chatterji, Prabodh Chandra, MA, FCS (Lond)	Proprietor, Scientific Supplies (Bengal) Co	C37 & 38, College Street Market	ditto
1944	Chatterji, Prafulla Chandra	Managing Director, P Chatterjee & Co	53, Ezra Street	ditto
1945	Chatterji, Pramamatha Nath	Hd. Clerk and Accountant, Royal Insurance Co, Ld	26 & 27, Dalhousie Square	ditto
1946	Chatterji, Priyanath, MA	Professor, City College	102-1, Amherst Street	ditto
1947	Chatterji, Rabindra Nath, MA	Professor, Vidyasagar College	39, Shankar Ghose Lane	ditto

No.	Names.	Style or calling.	Residence or place of business.	Religion.
1948	Chatterji, Rabindra Nath, MSc	Professor, Scottish Church College	4, Cornwallis Square	Hindu
1949	Chatterji, Ramesh Chandra, BSc	Manager, The Bengal Gold Works	12, Old Court House Lane	ditto
1950	Chatterji, Ram Nath	Assistant Engineer, City Division, P W D	Writers' Buildings	ditto
1951	Chatterji, S	Director, Dairy Food Supply Co, Ld	87, Lower Circular Road	ditto
1952	Chatterji, S	General Manager, Aryan Assurance, Ld	3 & 4, Hare Street	ditto
1953	Chatterji, S	Partner, P Chatterjee	7, Garstin Place	ditto
1954	Chatterji, S	Agency Supervisor, Manufacturers Life Insurance Co	27, Dalhousie Square	ditto
1955	Chatterji, Satish Chandra, MA	Lecturer, University College	Senate House	ditto
1956	Chatterji, Shachindra Nath	Proprietor, Aryan Planter's Agency	3 & 4, Hare Street	ditto
1957	Chatterji, Shaileshwar	Asstt. Treasurer, C A O's Office, E I R	E I R House	ditto
1958	Chatterji, S K, BCom, GDA	Director, Hooghly Bankers and Traders, Ld	43, Dharamtala Street	ditto
1959	Chatterji, Somnath, BA	Collector, Calcutta Corporation	Municipal Office	ditto
1960	Chatterji, Sudhindra Nath, BA	Librarian, Commercial Library	1, Council House Street	ditto
1961	Chatterji, Sudhir Chandra, BA	Sub-Assessor, Calcutta Corporation	Municipal Office	ditto
1962	Chatterji, Sudin Chandra	Proprietor, The Bengal Gold Works	12, Old Court House Lane	ditto
1963	Chatterji, Suresh Chandra, BE	Personal Assistant to Chief Engineer, P W D, Bengal	Writers' Buildings	ditto
1964	Chatterji, Suresh Chandra,	Suptdg Engineer, Central Circle, P W D	Victoria House, Chowringhee Square	ditto
1965	Chatterji, Sushil Kumar, MSc	Professor, St. Xavier's College	30, Park Street	ditto
1966	Chatterji, Tarak Das	Proprietor, Continental Commercial Co	14-2, Old China Bazar Street	ditto
1967	Chatterji, Umakanta, BE	Engineer, T N Banarji Ld	6, Hastings Street	ditto
1968	Chatterji, U N	Partner, Sen & Pandit	Mercantile Buildings	ditto

1969	Chaudhuri, Abdul Majid, BA	Head Assistant, Excise Branch, Agri and Ind Dept, Bengal	Writers' Buildings	Mahomedan
1970	Chaudhuri, B N, BE	Engineer, S K Chakravarti, Ld	1-1A, Mission Row	Hindu
1971	Chaudhuri, Charu Chunder	Press Manager, Thorne's Ld	17, Crooked Lane	Christian
1972	Chaudhuri, Hemanga Nath	Assistant, Andrew Yule & Co, Ld	8, Clive Row	Hindu
1973	Chaudhuri, Jatindra Kishore, MA	Professor, Vidyasagar College	39, Shanker Ghose Lane	ditto
1974	Chaudhuri, K L	Mosquito Controlling Officer, Calcutta Corporation	Municipal Office	ditto
1975	Chaudhuri, Kshitish Chandra	Landholder	20, Nimtala Ghat Street	ditto
1976	Chaudhuri, Lokendra Nath	Cashier, Shaw Wallace & Co	4, Bankshall Street	ditto
1977	Chaudhuri, Makhan Lal	Offg Dy Asstt Controller of Army Factory Accounts	6, Esplanade East	ditto
1978	Chaudhuri, N C	Landholder	20, Nimtala Ghat Street	ditto
1979	Chaudhuri, P	Secretary, India Equitable Insurance Co, Ld	102 Clive Street	ditto
1980	Chaudhuri, P N, MA, GDA	Proprietor, P N Chaudhuri	12-1, Old Post Office Street	ditto
1981	Chaudhuri, Prabhat Chandra	Merchant	23, Badur Bagan Lane	ditto
1982	Chaudhuri, Prafulla Chandra, MA, BL	Dy Chief Accounts Officer, E B R	3, Kaylaghat Street	ditto
1983	Chaudhuri, Ramesh Chandra	Accountant, Office of the Controller of Army Factory Accounts	6, Esplanade, East	ditto
1984	Chaudhuri, Ranada Kumar	Director and Secretary, Calcutta National Bank Ld	3 & 4, Hare Street	ditto
1985	Chaudhuri, R K, BA	Accountant, E B R	3, Koilaghat Street	ditto
1986	Chaudhuri, Rohini Mohan, MA, PhD	Lecturer, University College	Senate House	ditto
1987	Chaudhuri, S C (Rai Bahadur)	Managing Agent, Bengal Luxmi Cotton Mills, Ld	28, Pollock Street	ditto
1988	Chaudhuri, Shiva Kumar	Assistant, Anderson Wright & Co	22, Strand Road	ditto
1989	Chaudhuri, S K	Director, Chhajuram & Sons	100, Clive Street	ditto
1990	Chaudhuri, Surendra Nath, BL	Branch Manager, Star of India Insurance Co, Ld	137, Canning Street	ditto

No.	Names.	Style or calling.	Residence or place of business.	Religion.
1991	Chaudhuri, Suresh Chandra ..	Landholder	.. 20, Nimtala Ghat Street ..	.. Hindu
1992	Chellaraj, Benjamin Daniel, MA ..	Professor, St Paul's Cathedral College	.. 33-1, Amherst Street ..	.. Christian
1993	Chhiba, Ramratan	Asstt Engineer, Bengal Telephone Corpn, Ld ..	.. 1-2, Chittaranjan Avenue	.. Hindu
1994	Choksey, Fram Prestonji ..	Assistant Construction Engineer, C E S C, Ld ..	.. Victoria House ..	.. Zoroastrian
1995	Choksey, K P	Chief Electrical Engineer, C E S C, Ld	.. Victoria House ..	.. ditto
1996	Chowdhury, Chhajuram (Sir), KT, CIE.	Partner, Chhajuram & Sons	.. 100, Clive Street ..	.. Hindu
	D			
1997	Dalal, Ardeshir Rustomji, MA ..	Director, Tata Iron & Steel Co, Ld	.. 100, Clive Street ..	.. Zoroastrian
1998	Dalal, K M ..	General Manager, Noakhali Nath Bank, Ld ..	.. 135 & 136, Canning Street	.. ditto
1999	Dalmia, M	Assistant, Birla Bros, Ld ..	.. 8, Royal Exchange Place	.. Hindu
2000	Dandeker, S B, BCom GDA, RA ..	Accountant	.. 12, Dalhousie Square, East	.. ditto
2001	Darbari, Manekji Dadabhai, BCOM, ASAA	Proprietor, M D Darbari & Co	.. 100, Clive Street ..	.. Zoroastrian
2002	Das, Abanibhusan, MSc	Professor, City College ..	.. 102-1, Amherst Street ..	.. Hindu
2003	Das, Adhar Chandra, MA, PhD ..	Lecturer, Calcutta University	.. Senate House ..	.. ditto
2004	Das, Bhupendra Chandra ..	Professor, Presidency College	.. 86-1, College Street ..	.. ditto
2005	Das, Bhupendra Nath, MA ..	Lecturer, Scottish Church College	.. 4, Cornwallis Square ..	.. Christian
2006	Das, Dunia Lal	Partner, A B D R & Co	.. 25-B, Swallow Lane ..	.. Hindu
2007	Das, H C, BA	Accountant	.. 2-1, Mission Row ..	.. ditto
2008	Das, J C	Director, Bengal Central Bank Ld	.. 86, Clive Street ..	.. ditto
2009	Das, J N	Assistant Deputy Agent, E I R	.. E I R House ..	.. ditto
2010	Das, Jogendra Kishore, MA ..	Manager, M Bhattacharya & Co ..	.. 10, Bonfield Lane ..	.. ditto

2011	Das, Jyotish Chandra, BSc	Director, Calcutta Insurance, Ld	86, Clive Street	ditto
2012	Das, K B, BE, CE	Engineer	79-24A, Lower Circular Road	ditto
2013	Das, Krishnalal, MA	Superintendent, Commercial Intelligence Department India	1, Council House Street	ditto
2014	Das, Maheswar, MA	Lecturer, Calcutta University	Senate House	ditto
2015	Das, Mahie Ranjan	Assistant, Mackinnon Mackenzie & Co	16, Strand Road	ditto
2016	Das, Mohini Mohan	Head Master, Calcutta Training School	8, European Asylum Lane	ditto
2017	Das, N R, BSc (Glas)	Resident Engineer, Drainage, Calcutta Corporation	Hogg Street	ditto
2018	Das, P K	Director, D M Das & Sons, Ld	28, Dalhousie Square	ditto
2019	Das, Pratul Chandra BSc	Assistant, Martin & Co	12, Mission Row	ditto
2020	Das, Rabindra Nath, MSc	Demonstrator, Scottish Church College	4, Cornwallis Square	ditto
2021	Das, Rabindra Nath, BA	Manager, Ramani Mohan Das	26-4, Raja Brajendra Narayan Roy Street.	ditto
2022	Das, Rash Bihari	Sr Accountant, Accountant-General's Office, Bengal	Treasury Buildings	ditto
2023	Das, R N, BA	Manager, Sen & Pandit	Mercantile Buildings	ditto
2024	Das, Saroj Kumar, MA, PhD	Lecturer, University College	Senate House	Brahmo
2025	Das, Shrish Chandra	Accountant, Imperial Bank of India	8, Clive Street	Hindu
2026	Das, S L	Deputy Secretary, Port Commissioners' Office	Strand Road	ditto
2027	Das, S N	Director, Holmes, Wilson & Co, Ld	Norton Buildings	ditto
2028	Das, Tarak Chandra, MA	Lecturer, Calcutta University	Senate House	ditto
2029	Das Gupta, A C, BA, GDA, RA	Accountant	12, Old Post Office Street	ditto
2030	Das Gupta, Amar Prasad, MA, PhD	Assistant Controller, Calcutta University	Senate House	ditto
2031	Das Gupta, Annada Prasad, MA, BL	Senior Teacher, Keshab Academy	148, Manicktala Street	ditto
2032	Das Gupta, Anutos	Professor, Bangabasi College	25-1, Scott Lane	ditto

No.	Names.	Style or calling.	Residence or place of business.	Religion.
2033	Das Gupta, Arunendra, MA	Professor, Vidyasagar College	39, Shankar Ghose Lane	Hindu
2034	Das Gupta, Atul Chandra, MA	Professor, Vidyasagar College	39, Shankar Ghose Lane	ditto
2035	Das Gupta, B N, BSEE (USA)	Managing Director, Indo-Swiss Trading Co, Ld	2, Church Lane	ditto
2036	Das Gupta, H K, MA	Professor, St. Paul's Cathedral College	33-1, Amherst Street	Christian
2037	Das Gupta, Jitendra Nath	Assistant Engineer, Calcutta Improvement Trust	5, Clive Street	ditto
2038	Das Gupta, J N, BA BE MR SAN I	Director, Hindu Mutual Life Assurance Ld	309, Bowbazar Street	Hindu
2039	Das, Gupta, Nagendra Chandra	Assistant Engineer, City Division, P W D	Writers' Buildings	ditto
2040	Das Gupta, Paresh, MA	Industrial Surveyor, Bengal	40-1A, Free School Street	ditto
2041	Das Gupta, Paresh Chandra, AMAE	Member, Association of Engineers	2, Royal Exchange Place	ditto
2042	Das Gupta, Rajendra Nath	Joint Manager, Sen & Pandit	Mercantile Buildings	ditto
2043	Das Gupta, Rajendra Nath	Professor, Bangabasi College	25-1, Scott Lane	ditto
2044	Das Gupta, Ramaprosad, MA	Lecturer, Calcutta University	Senate House	ditto
2045	Das Gupta, Santos Kumar, MA, BL	Head Clerk, Health Office, Calcutta Corporation	Municipal Office	ditto
2046	Das Gupta, S N	Director, Indo-Swiss Trading Co, Ld	2, Church Lane	ditto
2047	Das Gupta, Sudhir Kumar, MA	Professor, Scottish Church College	4, Cornwallis Square	ditto
2048	Das Gupta, Sukumar	Head Assistant, Bengal Secretariat, P W D	Writers' Buildings	Brahmo
2049	Das Gupta, Surendra Nath, MA, PhD	Principal, Sanskrit College	College Square	Hindu
2050	Das Gupta, Tamonash Chandra, MA, PhD	Lecturer, University College	Senate House	ditto
2051	Datta Gupta, Akshoy Kumar (*Rai Sahib*), MA.	Librarian, Bengal Library	Writers' Buildings	ditto
2052	Datta Gupta, Jogesh Chandra, BE	Assistant Engineer, Dredger Division, Irrigation Department	3, Charnock Place	ditto
2053	Datta Majumdar, Navendu, MA, BL	Manager, Calcutta Commercial Bank, Ld	14, Clive Street	ditto
2054	Davar, Lall Singh, AMIE (Ind)	Proprietor, L S Davar & Co	1-2 Old Court House Corner	ditto
2055	Davar, M S, ASAA	Partner, S R Baltiboi & Co	1-B, Old Post Office Street	ditto

2056	Dawood, Adamjee Hajee	Managing Director, Adamjee Hajee Dawood & Co, Ld	4, Dalhousie Square	Mahomedan
2057	De, Abhoy Charan, BA	Partner, A C Dey & Bros	20, Darmahatta Street	Hindu
2058	De, B N, DSc (Eng)	Chief Engineer, Calcutta Corporation	Municipal Office	ditto
2059	De, Charu Chandra, BSc, BE	Engineer	8-2 Hastings Street	ditto
2060	De, Dhirendranath	Landholder	39, Simla Street	ditto
2061	De, G C	Office Manager, The Dunlop Rubber Co (India), Ld	42, Free School Street	ditto
2032	De, Gokuldas, MA	Lecturer, Calcutta University	Senate House	ditto
2063	De Gour Mohan, MSc	Chemist, Dey & Co	41-B, Clive Street	ditto
2034	De. Haraprasad, MSc, PRS	Professor, Vidyasagar College	39, Shankar Ghose Lane	ditto
2035	De, Jogesh Chandra, MA, BCom	Accountant, Imperial Bank of India (Burrabazar Branch)	195, Harrison Road	ditto
2066	De, Kali Charan, BSc (Glas)	District Controller of Stores, E I R	E I R House	ditto
2067	De, Kiran Chandra	Accountant, Imperial Bank of India	Strand Road	ditto
2038	De, K L, MSc (Cal), BSc (Edin)	Eng Supervisor, Calcutta Corporation, Dist III	Hogg Street	ditto
2069	De, Mukulchandra, ARCA (Lond)	Principal, Government School of Art	28, Chowringhee	ditto
2070	De, Phanindra Lal (*Rai Bahadur*)	Merchant and Landholder	99, Grey Street	ditto
2071	De, P P, BSc, BE	Director, Bengal Belting Works, Ld	14, Clive Street	ditto
2072	De, Purna Chandra	Offg Accountant, D A-G, P & T Office	7, Koilaghat Street	ditto
2073	De, Rajanikanta, MA, BSc	Professor, Scottish Church College	4, Cornwallis Square	ditto
2074	De, Satya Narain	Partner, D N Bose & Co	12, Kalidas Sinha Lane	ditto
2075	De, Satyendra Nath, MSc	Director, Overland Import & Export House (1930), Ld	5, Royal Exchange Place	ditto
2076	De, S C, BSc	Director, Bengal Belting Works, Ld	14, Clive Street	ditto

No.	Names.	Style or calling.	Residence or place of business.	Religion.
2077	De, S K, MISE	Mg Director, Sonar Bangla Bank, Ltd	137, Canning Street	Hindu
2078	De, Subodh Kumar, MA	Lecturer, Scottish Church College	4, Cornwallis Square	ditto
2079	De, Sudhir Chandra, BA	Landholder	18-A, Hartaki Bagan Lane	ditto
2080	De, Sudhirendra Nath	Landholder	42, Pathuriaghata Street	ditto
2081	De, Surendra Nath, BA	Sub-Assessor, Calcutta Corporation	Municipal Office	ditto
2082	De, Surendra Nath, MA	Sr Accountant, Accountant-General's Office, Bengal	Treasury Buildings	ditto
2083	De, Tulsi Das	Manager, Bengal Provincial Co-operative Bank, Ld	Writers' Buildings	ditto
2084	Deb, Keshab Lal	Asstt Manager, Photo Branch, Photo-Litho Office, Survey of India	14, Wood Street	ditto
2085	Deb, Malay Kumar, BSc, GDA	Auditor	8-2, Hastings Street	ditto
2086	Deb, Prafulla Krishna (Kumar Bahadur).	Landholder	106-1, Grey Street	ditto
2087	Deb, Pramode Krishna	Landholder	106-1, Grey Street	ditto
2088	Deo, Ranganath, BSc	Senior Chemist, Paterson Engineering Co (India), Ld	2, Dalhousie Square	ditto
2089	De Purkayastha, Paresh Chandra, MSc.	Demonstrator, St Xavier's College	30, Park Street	ditto
2090	Desai, Ishwarlal Bhogilal	Br Manager, Metro-Goldwyn-Mayer, India, Ld	5, Chowringhee	ditto
2091	De Sarker, Krishna Gopal	Partner *A B Patrika*, Ld	2, Ananda Chatterjee Lane	ditto
2092	De Sarkar, Nirmal Chandra, BA (Glas).	Zamindar	12, Sreenath Das Lane	ditto
2093	Devitre, Pheroze G, BA	Branch Secretary, Central Bank of India, Ld	100, Clive Street	Zoroastrian
2094	Dhar, A C, BSc, BE	Engineer	119-3, Shambazar Street	Hindu
2095	Dhar, D N, BA	Proprietor, Imperial Art Cottage	1-A, Tagore Castle Street	ditto
2093	Dhar, M, BS Mech Eng (U S A)	Proprietor, Dhar Company	84-A, Clive Street	ditto
2097	Dhar, Nrisinghalal, MSc	Demonstrator, St. Xavier's College	30, Park Street	ditto

2098	Dhar, Ramani Ranjan	Assistant, Martin & Co	12, Mission Row		ditto
2099	Dhar, S P, BSc (Glas)	Engineer and Valuer	9, Old Post Office Street		ditto
2100	Dinshaw, Ardeshir, BE	Engineer	10, Government Place		Zoroastrian
2101	Doshi, A K, BA	Director, Aryan Life Assurance Society, Ld	48, Grosvenor House		Hindu
2102	Driver, Darab Cursetji, MA (Cantab)	Constituted attorney, Tata Iron & Steel Co, Ld	100, Clive Street		Zoroastrian
2103	Durai, K	Track Supply Officer, E I R	E I R House		Hindu
2104	Dutt, Ajit Kumr, BSc	Sub-Assessor, Calcutta Corporation	Municipal Office		ditto
2105	Dutt, A K	Agent, Royal Insurance Co, Ld	26 & 27, Dalhousie Square		ditto
2106	Dutt, Ananta Krishna, BE	Member, Association of Engineers	2, Royal Exchange Place		ditto
2107	Dutt, Anath Bandhu, MA	Head Clerk, C A's Department, Calcutta Corporation	Municipal Office		ditto
2108	Dutt, Atulananda	Partner, *Amrita Bazar Patrika*, Ld	2, Ananda Chatterjee Lane		ditto
2109	Dutt, B C, MSc	Partner, Indo-Trading Co	100, Clive Street		ditto
2110	Dutt, Bhupendra Nath	Sr Superintendent, Reserve Bank of India	8, Council House Street		ditto
2111	Dutt, Binode Behari	Head Assistant, Office of Superintending Engineer, Central Circle, P W D.	Victoria House, Chowringhee Square		ditto
2112	Dutt, Birendra Nath, BSc	Assistant Controller of Inspection, Indian Stores Department	6, Esplanade, East		ditto
2113	Dutt, Birendra Saday, BA (Cantab)	Assistant, Burmah Shell Co of India, Ld	Hong Kong House		ditto
2114	Dutt, B N	Manager, Pirim, India, Ld	57, Ripon Street		ditto
2115	Dutt, C C	Landholder	1, Pataldanga Street		ditto
2116	Dutt, Debendranath, BE	District Engineer (III), Calcutta Corporation	Hogg Street		ditto
2117	Dutt, Dev	S S (Personnel), Agents Office, E I R	E I R House		ditto
2118	Dutt, Dwijendra Kumar	Assistant Engineer, Suburban Division, P W D	Writers' Buildings		ditto
2119	Dutt, Harimohan	Partner, Bidhu Bhusan Dutt & Co	20, Darmahatta Street		ditto

No.	Names.	Style or calling.	Residence or place of business.	Religion.
2120	Dutt, Haritosh	Divisional Accountant, Suburban Division, P W D	Writers' Buildings	Hindu
2121	Dutt, Harnam Das	Auditor, Chief Auditor's Office, E I R	E I R House	ditto
2122	Dutt, Hemendra Nath	Director, The Calcutta Commercial Bank, Ld	14, Clive Street	ditto
2123	Dutt, Hemanta Kumar, BE	Assistant, Martin & Co	12, Mission Row	ditto
2124	Dutt, Jatindra Krishna	Head Salesman, John Dickinson & Co, Ld	6, Clive Row	ditto
2125	Dutt, J M, MSc	Broker	2, Royal Exchange Place	ditto
2126	Dutt, Jogini Kumar	P A to Chief Engineer, Calcutta Corporation	Municipal Office	ditto
2127	Dutt, Jyotish Chandra	Bullion Keeper, Calcutta Mint	47, Strand Road	ditto
2128	Dutt, K C	Assistant Registrar of Joint Stock Companies	Treasury Buildings	ditto
2129	Dutt, K C, AMIEE	Director, General Utilities Co	7, Clive Row	ditto
2130	Dutt, Krishna Chandra	Superintendent, Office of the Controller of Currency	Treasury Buildings	ditto
2131	Dutt, Kula Chandra	Partner, Dutt & Brothers	113, Chittaranjan Avenue South	ditto
2132	Dutt, Kumudini Kanta	Head Assistant, Bengal Secretariat, P H Branch	Writers' Buildings	ditto
2133	Dutt, Lalita Prasad	Keeper of Records, Bengal Secretariat	Writers' Buildings	ditto
2134	Dutt, M	Chief Agent, United India Life Assurance Co, Ld	2, Lyons Range	ditto
2135	Dutt, Manamohan, BA	Accountant, Calcutta Corporation, Dist II	22, Mirzapur Street	ditto
2136	Dutt, M N, AMIE	Engineer	6, Old Post Office Street	ditto
2137	Dutt, Nalinaksha, MA, PhD	Lecturer, University College	Senate House	ditto
2138	Dutt, N C, BA	Officer, Hindustan Co-operative Insurance Society, Limited	Hindusthan Buildings	ditto
2139	Dutt, Nripendra Kumar, MA, PhD	Professor, Sanskrit College	College Square	ditto
2140	Dutt, P	Director, Villiers, Ld	F-3, Clive Buildings	ditto

2141	Dutt, P N	Assistant Manager, Robert Ingham Clark & Co, Ld	2, Clive Row	ditto
2142	Dutt, Prakash Sasi	Accountant, Central Forms Store	166, Dharamtala Street	ditto
2143	Dutt, Priyaranjan	Assistant Engineer, City Division, P W D	Writers' Buildings	ditto
2144	Dutt, Radharaman, BE	Insecure Building Inspector, Calcutta Corporation	Municipal Office	ditto
2145	Dutt, Rasik Lal, DSc	Industrial Chemist, Bengal	40-1A, Free School Street	ditto
2146	Dutt, S C, BA, FCI (Birm), GDA	Accountant and Auditor	31, Guruprasad Chaudhuri Lane	ditto
2147	Dutt, S C	Dy Bullion Keeper, Calcutta Mint	47, Strand Road	ditto
2148	Dutt, S C, MA	Professor, St Paul's Cathedral College	33-1, Amherst Street	ditto
2149	Dutt, Shishir K	Chief Agent, Gresham Life Assurance Society, Ld	8, Dalhousie Square, East	Brahmo
2150	Dutt, Shyam Sunder	Assistant Cashier, Martin & Co	12, Mission Row	Hindu
2151	Dutt, S K	Secretary, Bengal Immunity Co, Ld	153, Dharamtala Street	ditto
2152	Dutt, Snehamoy, MSc (Cal)	Professor, Presidency College	86-1, College Street	ditto
2153	Dutt, Sudhamoy, BE	Dy Assistant Valuer, Calcutta Improvement Trust	5, Clive Street	ditto
2154	Dutt, Surendra Nath	Controller, Calcutta Insurance, Ld	86, Clive Street	ditto
2155	Dutt, Sushil Chandra, MA, BL	Professor, Scottish Church College	4, Cornwallis Square	Christian
2156	Dutt, Tarapada (Rai Sahib), BE	Examiner of Patents	1, Council House Street	Hindu
2157	Dutt Gupta, Jogesh Chandra, BE	Assistant Engineer, Dredger Division, P W D	3, Charnock Place	ditto
2158	Dutt Majumdar, N	Director and Manager, The Calcutta Commercial Bank, Ld	14, Clive Street	ditto
2159	Dutt Ray, Jogendranath, MA	District Accountant, D E'S Office	79, Cornwallis Street	ditto
2160	Dyal, Maha Shanker	Staff Assistant, Imperial Bank of India	Strand Road	ditto

No.	Names.	Style or calling	Residence or place of business.	Religion.
	G			
2161	Gadgil, Balkrishna Waman, BSc	Manager, Western India Industries	137, Canning Street	Hindu
2162	Gaffur, Abdul, MA	Accountant, D A-G P and T Office	7, Koilaghat Street	ditto
2163	Gaggar, Rupnarayan, MA (Com)	Assistant Secretary, Marwari Chamber of Commerce	203-1, Harrison Road	ditto
2164	Gambhir, Desraj	Staff Assistant, Imperial Bank of India	3, Strand Road	ditto
2165	Ganesan, P N	Manager, Felt and Tarrant (India) Co	4, Lyons Range	ditto
2166	Ganguli, Amritalal, MA	Professor, Vidyasagar College	39, Shankar Ghose Lane	ditto
2167	Ganguli, Bhupendranath, MA	Dy License Officer, Calcutta Corporation	Municipal Office	ditto
2168	Ganguli, D N, BE	Deputy Assessor, Calcutta Corporation	Municipal Office	ditto
2169	Ganguli, Harendra Nath	Asstt Superintendent, C O S Office, E I R	E I R House	ditto
2170	Ganguli, J, BE, AMIE	Engineer	6, Hastings Street	ditto
2171	Ganguli, Jatindra Mohan, BA	Head Assistant, Agri & Industries Deptt, Bengal	Writers' Buildings	ditto
2172	Ganguli, Jnanada Kanta, MA	Professor, Vidyasagar College	39, Shankar Ghose Lane	ditto
2173	Ganguli, Kshiti Mohan	Director, Eastern Merchants, Ld	102-1, Clive Street	ditto
2174	Ganguli, Lalit Mohan	Staff Assistant, Imperial Bank of India	3, Strand Road	ditto
2175	Ganguli, Mohan Lal, MSc	Lecturer, University College	Senate House	ditto
2176	Ganguli, P	Share Broker	2, Royal Exchange Place	ditto
2177	Ganguli, P D	Partner, Universal Trading Co	33, Canning Street	ditto
2178	Ganguli, Phanindra Lal, MA	Lecturer, Calcutta University	Senate House	ditto
2179	Ganguli, Pravas Chandra, MSc	Lecturer, Ripon College	24, Harrison Road	ditto
2180	Ganguli, Rakhal Das	Superintendent, Telegraph Check Office	33, Dalhousie Square, South	ditto

2181	Ganguli, R K, AMIM	Special Officer, C E's Deptt, Calcutta Corporation	Municipal Office		ditto
2182	Ganguli, Satish Chandra, BA	Branch Manager, Brough & Philpott, Ld	55, Bentinck Street		ditto
2183	Ganguli, Subodh Chandra	Branch Manager, Jupiter General Insurance Co, Ld	7, Pollock Street		ditto
2184	Ganguli, Surendra Mohan, DSc	Lecturer, University College	Senate House		ditto
2185	Garg, Beniprasad, BSc	Director, National Cement Mines & Industries, Ld	10, Clive Row		ditto
2186	Garg, Ram Krishna	Director, National Cement Mines & Industries, Ld	10, Clive Row		ditto
2187	Ghani, Hajee Sakoor	Merchant	71-2, Canning Street		Mahomedan
2188	Ghatak, Atul Chandra, MA	Superintendent, University Press	Senate House		Hindu
2189	Ghatak, Mahendra Nath	Assistant Commercial Manager, E I R	E I R House		ditto
2190	Ghosal, Aswini Kumar	Auditor, C A's Office, E I R	E I R House		ditto
2191	Ghosal, N G, BA	Accountant, D A-G P and T Office	7, Koilaghat Street		ditto
2192	Ghosal, Shailendra Nath, MA	License Officer, Calcutta Corporation	Municipal Office		ditto
2193	Ghosal, Upendra Nath, MA, PhD (No I)	Professor, Presidency College	86-1, College Street		ditto
2194	Ghosal, Upendra Nath (No II)	Professor, Presidency College	86-1, College Street		ditto
2195	Ghose, A C, BA	Branch Manager, Brooke Bond, India, Ld	2, Metcalfe Street		ditto
2196	Ghose, A L, BSc	Officer, Hindusthan Co-operative Insurance Society, Limited	Hindusthan Buildings		ditto
2197	Ghose, Amarendra Nath	Partner, Calcutta Glass Stores	3, Royal Exchange Place		ditto
2198	Ghose, Amritalal, MA, BL	Lecturer, City College	102-1, Amherst Street		ditto
2199	Ghose, Amulya Charan	Professor, Vidyasagar College	39, Shanker Ghose Lane		ditto
2200	Ghose, A T (Rai Bahadur)	Landholder	8, Rasik Lal Ghose Lane		ditto
2201	Ghose, B B, AMAE	Partner, General Engineering Co	25-B, Swallow Lane		ditto
2202	Ghose, Bijan Kanti, BA	Manager, *Amrita Bazar Patrika*, Ld	2, Ananda Chatterjee Lane		ditto

No.	Names.	Style or calling.	Residence or place of business.	Religion.
2203	Ghose, Birendra Chandra, BE	Deputy Assistant Valuer, Calcutta Improvement Trust	5, Clive Street	Hindu
2204	Ghose, B P	Manager, *Reuters*, Ld	7, Hare Street	ditto
2205	Ghose, Chandra Kumar	Building Surveyor, Calcutta Corporation	Municipal Office	ditto
2206	Ghose, D (Rai Sahib)	Assistant Traffic Superintendent, EBR	3, Kaylaghat Street	ditto
2207	Ghose, Debendra Nath (II)	Sr Accountant, A-G's Office, Bengal	Treausury Buildings	ditto
2208	Ghose, Debprasad, MA	Curator, Asutosh Museum	Asutosh Building	ditto
2209	Ghose, Dhirendra Nath	Accountant, Office of the Controller of Army Factory Accounts	6, Esplanade, East	ditto
2210	Ghose, Dhirendra Nath, MA	Professor, Vidyasagar College	39, Shankar Ghose Lane	ditto
2211	Ghose, Dhiresh Chand	Partner, Calcutta Glass Stores	3, Royal Exchange Place	ditto
2212	Ghose, D N, MSc	Partner, M Ghose & Co	36, Strand Road	ditto
2213	Ghose, Durgapada	Manager, Oriental Trading Co	84-A, Clive Street	ditto
2214	Ghose, H C	Agency Superintendent, National Indian Life Insurance Co, Ld	12, Mission Row	ditto
2215	Ghose, H D, MA	Proprietor, The Commercial Bureau	2, Royal Exchange Place	ditto
2216	Ghose, Hirendranath, BE	Examiner of Patents	1, Council House Street	ditto
2217	Ghose, H N, MA, BL	Representative, Macmillan & Co, Ld	294, Bowbazar Street	ditto
2218	Ghose, Jatindra Nath, BA	Accountant, Office of the Controller of Armv Factory Accounts	6, Esplanade, East	ditto
2219	Ghose, Jitendra Nath, BL	Director, Unique Assurance Co, Ld	10, Canning Street	ditto
2220	Ghose, J K, AMEE	Partner, P K Ghose & Co	12, Chowringhee	ditto
2221	Ghose, J N	Partner, General Engineering Co	25-B, Swallow Lane	ditto
2222	Ghose, Jyotirmaya	Professor, Presidency College	86-1, College Street	ditto
2223	Ghose, K	Editor and Manager, *Calcutta Commercial Gazette*	2, Royal Exchange Place	ditto

2224	Ghose, Kalipada	Head Assistant, Central Stationery Office	3, Church Lane		ditto
2225	Ghose, Kamala Prasanna	Cashier, Mercantile Bank of India, Ld	8, Clive Street		ditto
2226	Ghose, Kamini Kumar, MA, BT	Head Master, Ripon Collegiate School	24, Harrison Road		ditto
2227	Ghose, Kshetra Mohan, BSc	Professor, St Xavier's College	30, Park Street		ditto
2228	Ghose, Kumud Bandhu, MSc	Accountant, D A-G P and T Office	7, Koilaghat Street		ditto
2229	Ghose, L K	Partner, General Engineering Co	25-B, Swallow Lane		ditto
2230	Ghose, M	Partner, M Ghose & Co	36, Strand Road		ditto
2231	Ghose, Manindra Nath	Supervisor, Engineering Dept, Drainage, Calcutta Corporation	Municipal Office		ditto
2232	Ghose, Manindra Nath	Sub-Assessor, Calcutta Corporation	Municipal Office		ditto
2233	Ghose, M N, MCE	Managing Proprietor, Oriental Machinery Supplying Agency, Ld	20-1, Lall Bazar Street		ditto
2234	Ghose, Mohit Mohan, MSc	Lecturer, University College	Senate House		ditto
2235	Ghose, Nalini Bhusan	Accountant, D A-G P and T Office	7, Koilaghat Street		ditto
2236	Ghose, Naresh Chandra	Professor, Presidency College	86-1, College Street		ditto
2237	Ghose, Nirad Bihari	Landholder	13, Nayanchand Dutt Street		ditto
2238	Ghose, Niranjan	Secretary, Publishing House, Y M C A	5, Russell Street		ditto
2239	Ghose, Nirmal Chandra	Zamindar	2, Loudon Street		ditto
2240	Ghose, N K	Partner, P K Ghose & Co	12, Chowringhee		ditto
2241	Ghose, N N, BA	Manager, Chakravarti, Ghose, Guha & Co	15, Clive Street		ditto
2242	Ghose, Pabitra Kumar, BSc	Incorporated Accountant, P K Ghose & Co	100, Clive Street		ditto
2243	Ghose, Panchanan	Subdivisional Officer, Govt House, Calcutta	Government House		ditto
2244	Ghose, Pashupati Charan	Chief Accountant, Roneo, Ld	32-1, Dalhousie Square		ditto
2245	Ghose, Pashupati Nath	Landholder	8, Rasik Lal Ghose Lane		ditto

No.	Names.	Style or calling.	Residence or place of business.	Religion.
2246	Ghose, P C, BA	Partner, D N Bose & Co	12, Kalidas Sinha Lane	Hindu
2247	Ghose, Phanindra Nath, MA, PhD, DSc	Professor, University College	92, Upper Circular Road	ditto
2248	Ghose, P K	Accountant, D A-G P & T Office	7, Koilaghat Street	ditto
2249	Ghose, P K, AMME	Partner, P K Ghose & Co	12, Chowringhee	ditto
2250	Ghose, Prafulla Chandra, MA	Professor, Presidency College	86-1, College Street	ditto
2251	Ghose, Prafulla Chandra, MA, BSc	Lecturer, University College	Senate House	ditto
2252	Ghose, Puridas, BE	Assistant Resident Engineer, W W Extension, Calcutta Corporation	Municipal Office	ditto
2253	Ghose, Rabindra Narayan, MA	Principal, Ripon College	24, Harrison Road	ditto
2254	Ghose, Radharaman	Accountant, D A-G P and T Office	7, Koilaghat Street	ditto
2255	Ghose, Rajendra Krishna	Zamindar	1, Jorabagan Street	ditto
2256	Ghose, Ramesh Chandra	Deputy Superintendent, Commercial Intelligence and Statistics	1, Council House Street	ditto
2257	Ghose, Rashbehari	Merchant	9, Clive Row	ditto
2258	Ghose, R K	Partner, General Engineering Co	25-B, Swallow Lane	ditto
2259	Ghose, Satyendra Nath, MSc	Sub-Assessor, Calcutta Corporation	Municipal Office	ditto
2260	Ghose, S C, B Sc	Assistant, P K Ghose & Co	100, Clive Street	ditto
2261	Ghose, S C	Partner, Universal Trading Co	33, Canning Street	ditto
2262	Ghose, S C	Estate Superintendent, Port Commissioners' Office	Strand Road	ditto
2263	Ghose, Shanti Kumar, BE	Building Surveyor, Calcutta Corporation	Municipal Office	ditto
2264	Ghose, Sharat Chandra, MA	Organizing Manager, Zenith Life Assurance Co, Ld	Norton Buildings	ditto
2265	Ghose, Sharat Chandra, BA	Proprietor, Dwarkin & Son	11, Esplanade, East	ditto

2266	Ghose, Shiva Prasanna ..	.. Zamindar ..	.. 75, Beadon Street ..	.. ditto
2267	Ghose, Shuddhodan, DSC ..	.. Lecturer, University College ..	.. 92, Upper Circular Road ..	.. ditto
2268	Ghose, S K, ASAA, BA ..	.. Accountant	.. 4, Hastings Street ..	.. ditto
2269	Ghose, S M ..	.. Builder & Contractor ..	.. 57, Chittaranjan Avenue, South	.. ditto
2270	Ghose, S M	.. Health Officer, Calcutta Corporation, District No I	.. 79, Cornwallis Street ..	.. ditto
2271	Ghose, Sripada, BE ..	.. Assistant Engineer, City Division, P W D ..	.. Writers' Buildings ..	.. ditto
2272	Ghose, Subodh Chandra ..	.. Assistant Engineer, Public Health Department, Bengal	.. 3, Charnock Place ..	.. ditto
2273	Ghose, Subodh Chandra, BSC, BE	.. Engineer, District No I, Cal Corporation ..	.. 79, Cornwallis Street ..	.. ditto
2274	Ghose, Subodh Chandra ..	.. Electrical Engineer, Universal Trading Union ..	.. 9, Dalhousie Square, East	.. ditto
2275	Ghose, Suhrid Kumar ..	.. Assistant Assessor, Calcutta Corporation ..	.. Municipal Office ..	.. ditto
2276	Ghose, Sukhendra Nath ..	.. Executive Engineer, P H D, Bengal ..	.. 3, Charnock Place ..	.. ditto
2277	Ghose, Sunil Kanti ..	.. Partner, *Amrita Bazar Patrika*, Ld .	.. 2, Ananda Chatterjee Lane	.. ditto
2278	Ghose, Suresh Chandra, MA	.. Lecturer, City College ..	.. 102-1, Amherst Street ..	.. ditto
2279	Ghose, Sushil Chandra	.. Managing Partner, Universal Trading Co ..	.. 33, Canning Street ..	.. ditto
2280	Ghose, Swadesh Bhusan, BA	.. Partner, Calcutta Glass Stores ..	.. 3, Royal Exchange Place	.. ditto
2281	Ghose, Tara Prasanna	.. Shroff, Mercantile Bank of India, Ld ..	.. 8, Clive Street ..	.. ditto
2282	Ghose, Tarun Kumar, BSC	.. Partner, Ghose & Saha ..	.. 1-B, Old Post Office Street	.. ditto
2283	Ghose, Tushar Kanti	.. Editor, *Amrita Bazar Patrika*, Ld ..	.. 2, Ananda Chatterjee Lane	.. ditto
2284	Ghose, Upendra Nath, MA (Rai Sahib)	Deputy Assistant Controller of Army Factory Accounts	.. 6, Esplanade, East ..	.. ditto
2285	Gidwani, Tularam Udharam	.. Asstt Manager, J B Advani & Co, Ld ..	.. 104, Old China Bazar Street	.. ditto
2286	Goenka, Gajanand	.. Merchant ..	.. 5, Bysack Street ..	.. ditto
2287	Goswami, Mahendra Nath, MA, Dr	.. Lecturer, University College ..	.. 92, Upper Circular Road	.. ditto

No.	Names.	Style or calling.	Residence or place of business.	Religion
2288	Goswami, Pramatha Nath	Professor, Bangabasi College	25-1, Scott Lane	Hindu
2289	Goswami, Surendranath	Professor, Bangabasi College	25-1, Scott Lane	ditto
2290	Grover, Mulchand, BA, LLB	Asstt Secretary, Lakshmi Insurance Co, Ld	7, Esplanade East	ditto
2291	Guha, Jnanendra Chandra (Rai Sahib)	Personal Assistant to the Inspector-General of Prisons, Bengal	Writers' Buildings	ditto
2292	Guha, Rajendra Nath, BA	Asstt Collector, Calcutta Corporation	Municipal Office	ditto
2293	Guha, S C, BA, GDA, RA	Auditor, Chakravarti, Ghose, Guha & Co	15, Clive Street	ditto
2294	Guha, S K, BSc, BE	Executive Engineer, Damodar Division	Treasury Buildings	ditto
2295	Guin, Lalit Mohan	Head Assistant, Central Stationery Store	3, Church Lane	ditto
2296	Guin, N K, MA, BSc	Professor, St Paul's Cathedral College	33-1, Amherst Street	Christian
2297	Gupta, Asoka Kumar	Rector, Boys' Nursery Home	6, Nalin Sarkar Street	Hindu
2298	Gupta, Debaprasad, MA, BL	Landholder	5, Middleton Street	ditto
2299	Gupta, Dhirendra Nath	Sub-Assessor, Calcutta Corporation	Municipal Office	ditto
2300	Gupta, G C	Landholder	5, Middleton Street	ditto
2301	Gupta, Hrisikesh	Landholder	7, Gooptu Lane	ditto
2302	Gupta, Iresh Chandra, MSc	Shareholder S C Sons, Ld	14, Clive Street	ditto
2303	Gupta, K	Branch Manager, Commercial Pine Forests, Ld	4, Lyons Range	ditto
2304	Gupta, K C	Principal, Vidyasagar College	39, Sankar Ghose Lane	ditto
2305	Gupta, L K	Assistant, McLeod & Co	28, Dalhousie Square	ditto
2306	Gupta, Manaranjan, MSc	Lecturer, University College	Senate House	ditto
2307	Gupta, Naresh Chandra	Director, S C Sons, Ld	14, Clive Street	ditto

2308	Gupta, Paresh Chandra	Superintendent, W W Dept, Calcutta Corporation	Municipal Office	ditto
2309	Gupta, Premananda	Assistant, Martin & Co	12, Mission Row	Brahmo
2310	Gupta, Pulin Behary	Bank Officer, Imperial Bank of India	3, Strand Road	Hindu
2311	Gupta, Rabindranath, MA	Lecturer, Govt Commercial Institute	11, Hastings Street	ditto
2312	Gupta, Raghunath	Staff Assistant, Imperial Bank of India	3, Strand Road	ditto
2313	Gupta, Ramaprasad	Landholder	7, Middleton Street	ditto
2314	Gupta, Rebatimohan, BE	Resident Engineer, W W Extension, Calcutta Corporation	Municipal Office	ditto
2315	Gupta, R R	Asstt Audit Officer, C A's Office, E I R	E I R House	ditto
2316	Gupta, Samirendra Nath	Assistant, Bengal Iron Co, Ld	4, Lyons Range	ditto
2317	Gupta, Shailesh Chandra, BA	Director, S C Sons, Ld	14, Clive Street	ditto
2318	Gupta, Sisir Kumar	Assistant, Bird & Co	1-1, Clive Street	ditto
2319	Gupta, S P, MSC	Landholder	5, Middleton Street	ditto
2320	Gupta, Sudhir Kumar, BA	Assistant, Martin & Co	12, Mission Row	ditto
2321	Gupta, Surendra Nath	Local Secretary, North British & Mercantile Insurance Co	101-1, Clive Street	Brahmo
2322	Gupta, V P, BA	Accountant, D A-G P and T Office	7, Koilaghat Street	Hindu
2323	Gutgutia, Kashinath, BCom	Joint Honorary Secretary, Marwari Association	134, Mechua Bazar Street	ditto
2324	Guzdar, K M	Partner, P M Guzdar & Co	43, Ezra Street	Zoroastrian
2325	Guzdar, N M	Partner, P M Guzdar & Co	43, Ezra Street	ditto
2326	Guzdar, P M	Partner, P M Guzdar & Co	43, Ezra Street	ditto

H

2327	Hakim, Ataul, MA	Professor, Islamia College	8, Wellesley Street	Mahomedan
2328	Hakim, Razaul, MA, BL	Industrial Surveyor, Bengal	40-1A, Free School Street	ditto

No.	Names.	Style or calling.	Residence or place of business.	Religion.
2329	Haldar, A K, MSc, BL	Joint Chief Agent, Zenith Life Assurance Co, Ld	Norton Buildings	Hindu
2330	Haldar, S, BSc	A T S, E B R	3, Kaylaghat Street	ditto
2331	Haridas, Anandji	Managing Director, Anandji Haridas & Co, Ld	1, Meerbohar Ghat	ditto
2332	Hashim, M	Dy Chief Auditor, C A's Office, E I R	E I R House	Mahomedan
2333	Hedayetullah, Syed, MSc, Phd	Lecturer, University College	92, Upper Circular Road	ditto
2334	Home, Amal	Editor, *Calcutta Municipal Gazette*	Municipal Office	Hindu
2335	Hossain, A, BA	Agent, Central Bank of India, Ld	71, Cross Street	Mahomedan
2336	Hossain, Altaf, MA	Professor, Islamia College	8, Wellesley Street	ditto
2337	Hossain, Attar (Md), BA	Sub-Assessor, Calcutta Corporation	Municipal Office	ditto
2338	Hossain, M Ahmed, MSc	Professor, Islamia College	8, Wellesley Street	ditto
2339	Hossain, S M Moazzem, MA	Sub-Assessor, Calcutta Corporation	Municipal Office	ditto
2340	Hui, J C	Director, Indo-Swiss Trading Co, Ld	28, Pollock Street	Hindu
2341	Huq, Aminul (Maulvi), BA	Head Assistant, Bengal Secretariat, Judicial Department	Writers' Buildings	Mahomedan
2342	Huq, Mahfuzul	Professor, Presidency College	86-1, College Street	ditto
2343	Huq, Mahammad Fazlul, BA	Head Assistant, Bengal Secretariat, Education Department.	Writers' Buildings	ditto
	I			
2344	Islam, Md Zahurul (Maulvi), MA	Professor, Islamia College	8, Wellesley Street	Mahomedan
2345	Islam, Ziaul (Maulvi), BE	Assistant Engineer, Dredger Division, P W D	3, Charnock Place	ditto
2346	Iyengar, B K T, BSc	Asstt Accountant-General, A-G's Office, Bengal	Treasury Buildings	Hindu
2347	Iyengar, K K, MA	Asstt Accountant-General, A-G's Office, Bengal	Treasury Buildings	ditto

2348	Iyer, A M Gopala, MA	Manager, East India Film Co	2-1, Central Avenue	ditto
2349	Iyer, A V Ramalinga, BA, BE, MIE	Director, Indian Mutual Life Association, Ltd	8-2, Hastings Street	ditto
2350	Iyer, C Venkatarama, BA	P W Sr Accountant, A-G's Office, Bengal	Treasury Buildings	ditto
2351	Iyer, K Gopal	Accountant, D A-G P & T Office	7, Koilaghat Street	ditto
2352	Iyer, P S Ramchandra, BA	Accountant, D A-G P & T Office	7, Koilaghat Street	ditto
2353	Iyer, P Subramania	P A to Manager, N I L Ins Co, Ld	12, Mission Row	ditto
2354	Iyer, Ram Krishna	Offg Accountant, D A-G P & T Office	7, Koilaghat Street	ditto
2355	Iyer, S E, BA	Offg A A O, D A-G P & T Office	7, Koilaghat Street	ditto
2356	Iyer, S K	Accountant, D A-G P & T Office	7, Koilaghat Street	ditto
2357	Iyer, Subraya Rama	Branch Manager, Govan Bros, Ld	20, Park Street	ditto
2358	Iyer, T Adisesh, BCom	Accountant, E B R	3, Koilaghat Street	ditto
2359	Iyer, V S S	Accountant, D A-G P & T Office	7, Koilaghat Street	ditto

J

2360	Jain, Daulat Chand	Auditor, Chief Auditor's Office, E I R	E I R House	Hindu
2361	Jajharia, Nandkishore	Director, Shree Radhakrishna Sugar Mills, Ld	138, Harrison Road	ditto
2362	Jajharia, Ramdhandas	Director, Shree Radhakrishna Sugar Mills, Ld	138, Harrison Road	ditto
2363	Jajharia, R K	Managing Director, Shree Radhakrishna Sugar Mills, Ld	138, Harrison Road	ditto
2364	Jalan, J	Assistant, Birla Bros, Ld	8, Royal Exchange Place	ditto
2365	Jatia, Champalal	Landholder and Merchant	21, Rupchand Roy Street	ditto
2366	Jatia, Kanailal	Landholder and Merchant	21, Rupchand Roy Street	ditto
2367	Jhunjhunwalla, L N	Merchant	73, Cross Street	ditto

No.	Names.	Style or calling.	Residence or place of business.	Religion.
	K			
2368	Kabir, Humayun Z A, MA, BA (Oxon)	Lecturer, Calcutta University	Senate House	Mahomedan
2369	Kalimur, Shah (Maulvi), MA	Lecturer, Calcutta University	Senate House	ditto
2370	Kanji, Govindji (Shah)	Branch Manager, Jeewanlal (1929), Ld	101, Clive Street	Hindu
2371	Kanoriya, G	Assistant, Birla Bros, Ld	8, Royal Exchange Place	ditto
2372	Kanoriya, J P	Assistant, Birla Bros, Ld	8, Royal Exchange Place	ditto
2373	Kanoriya, Ramnath	Merchant	29, Banstolla Street	ditto
2374	Kanoriya, Ramsunder	Director, National Cement Mines & Industries, Ld	10, Clive Row	ditto
2375	Kapoor, Brij Bihari Lal	Sub-Accountant, National City Bank of New York	4, Clive Street	ditto
2376	Kapoor, Sitaram	Accountant, Allahabad Bank, Ld	6, Royal Exchange Place	ditto
2377	Kar, Bipin Bihari	Sr Superintendent, Reserve Bank of India	8, Council House Street	ditto
2378	Kar, Karuna Kishore, BL	Managing Director, Unique Assurance Co, Ld	10, Canning Street	ditto
2379	Kar, S K, BSc, ASAA, AISA	Accountant	E-4, Hastings Street	ditto
2380	Karforma, Narendra Kumar, MA	Professor, Scottish Church College	4, Cornwallis Square	ditto
2381	Karmally, H	Manager, Adamjee Hajee Dawood & Co, Ld	4, Dalhousie Square, East	Mahomedan
2382	Karnani, Chandanmull (Rai Saheb)	Banker & Merchant	3, Synagogue Street	Hindu
2383	Khaitan, Gouriprasad	Proprietor, Khaitan Sons & Co	43 Zakaria Street	ditto
2384	Khambata, Framroze Merwanji	Manager, Polson Manufacturing & Co	44, Dharamtala Street	Zoroastrian
2385	Khan, Abdul Latiff (Khan Bahadur)	Personal Assistant to Director of Public Instruction, Bengal	Writers' Buildings	Mahomedan
2386	Khan, Mosaheb Ali, MA	Dy License Officer, Calcutta Corporation	Municipal Office	ditto
2387	Khan, Samsuddin Ahmed, MA	Inspector of Schools, Education Department	Municipal Office	ditto

2388	Khan, Samsamuddin, BA	Secretary, Young Muslim Literary Club	13-4 B, Collin Lane	ditto
2389	Khan, Syeduddin, A W, BA	Head Assistant, Bengal Secretariat, P W D	Writers' Buildings	ditto
2390	Khan, Zakaulla, BSc (Lond)	Asstt Engineer, Calcutta Improvement Trust	5, Clive Street	ditto
2391	Khandelwal Kedarnath, BA, LLB	Partner, Narayandas Khandelwal & Co	69-A, Amherst Street	Hindu
2392	Khanna, Roshanlal	Assistant, Andrew Yule & Co, Ld	8, Clive Row	ditto
2393	Khemka, B L	Proprietor, East India Film Co	2-1, Central Avenue	ditto
2394	Khettry, Lakshmi Narayan	Merchant & Landholder	44, Manicktalla Street	ditto
2395	Khettry, Shyamlal	Bill Examiner, Imperial Bank of India	3, Strand Road	ditto
2396	Khondkar, Johadar Rahim	Chief Clerk, Ericsson Telephone, Ld	21, Old Court House Street	Mahomedan
2397	Khosla, Keshav Chandra, BSc (Eng)	Asstt Engineer, Indian Stores Department (Inspection)	6, Esplanade East	Hindu
2398	Khosla, Ram Kishen	Assistant Engineer, Indian Stores Department (Inspection)	6, Esplanade, East	ditto
2399	Khuda, Quadrati (Dr)	Professor, Presidency College	86-1, College Street	Mahomedan
2400	Kibria, Gholam, Maulvi, BA, BT	Head Master, Calcutta Model School	8, European Asylum Lane	ditto
2401	Kola,, Bhutnath	Landholder	171, Bowbazar Street	Hindu
2402	Kotval, Shantaram Balkrishna, BA	Secretary, Shree Radhakrishna Sugar Mills, Ld	138, Harrison Road	ditto

No.	Names.	Style or calling.	Residence or place of business.	Religion.
2403	Krishnamachari, V, BA	Asstt Accounts Officer, D A-G P & T Office	7, Koilaghat Street	Hindu
2404	Krishnan, Kariamanikkam Srinivasa, DSc.	Professor, Indian Association for the Cultivation of Science	210, Bowbazar Street	ditto
2405	Krishnan, S S, BA	Assistant Accountant-General, A-G's Office	Treasury Buildings	ditto
2406	Krishnaswami, V S, BA	Assistant Accounts Officer, E B R	3, Koilaghat Street	ditto
2407	Kulkarni, Haramba Suryanarayan	Engineer, English Electric Co, Ld	D-4, Clive Buildings	ditto
2408	Kumar, Kali Kumar, MSc	Lecturer, University College	92, Upper Circular Road	ditto
2409	Kumar, Kumar Krishna, MA	Partner, Sitalprasad Kharagprasad	31, Burtolla Street	ditto
2410	Kumar, Lalit Mohan	Assistant Traffic Manager, Bengal Telephone Corporation, Ld	8, Hare Street	ditto
2411	Kumar, Prakash Chandra, BSc	Partner, Eastern Shipping Agency	8, Dalhousie Square, East	ditto
2412	Kumar, Pravas Chandra	Director, T D Kumar & Bros, Ld	67-4, Strand Road	ditto
2413	Kumar, Pravat Chandra	Manager, Eastern Shipping Agency	8. Dalhousie Square, East	ditto
2414	Kumar, S, AMICE	Engineer	28, Neogipukur Lane	ditto
2415	Kumar, Surendra Nath	Superintendent, Reading-rooms, Imperial Library	6, Esplanade, East	ditto
2416	Kundu, Ashutos	Sub-Assessor, Calcutta Corporation	Municipal Office	ditto
2417	Kundu, Suresh Chandra, BA	Head Master, Town School	Shampukur Street	ditto
2418	Kunhappa, M, BA	Accountant, E B R	3, Koilaghat Street	ditto

L

2419	Laha, Shashanka Shekhar, BA	Partner, Laha & Co	70-1 Clive Street	Hindu
2420	Lahiri, Jagadindra Nath	Manager and Secretary, Bengal Chemical and Pharmaceutical Works, Ld.	31, Chittaranjan Avenue, South	ditto
2421	Lahiri, J N, MSc (Cal & U S A)	Managing Director, Bengal Belting Works, Ld	14, Clive Street	ditto
2422	Lahiri, Kalipada, MSc	Sr Accountant, Accountant-General's Office, Bengal	Treasury Buildings	ditto
2423	Lahiri, Nirad Kumar, MA	Inspector of Schools, Education Department	Municipal Office	ditto
2424	Lahiri, Upendranath	Clerk, Mackinon Mackenzie & Co	16, Strand Road	ditto
2425	Lal, Manohar	Auditor, C A's Office, E I R	E I R House	ditto
2426	Lala, Shib Narayan, AISA (Lond)	Professor, Scottish Church College	4, Cornwallis Square	ditto
2427	Laskar, Radha Kishore, BA	Officiating Accountant, D A-G P & T Office	7, Koilaghat Street	ditto
2428	Latif, Sarhan Camrudin, BA (Cantab)	Asstt Controller of Purchase, Indian Stores Deptt	6, Esplanade, East	Mahomedan
2429	Law, Gokul Chandra (Kumar)	Director, Bengal Bonded Warehouse Association	102, Clive Street	Hindu
2430	Law, Narendra Nath, MA, PhD	Landholder	96, Amherst Street	ditto
2431	Law, Santos Charan, BA	Merchant and Banker	121, Mooktaram Babu Street	ditto
2432	Law, Satish Chandra	Cashier, Chartered Bank of India, Australia and China	1-1, Clive Street	ditto

No.	Names.	Style or calling.	Residence or place of business.	Religion.
2433	Law, Tarini Charan	Partner, Kristodas Law & Co	63, Radhabazar Street	Hindu
2434	Lekhraj	Auditor, Chief Auditor's Office, E I R	E I R House	ditto
2435	Lohia, Keshab Deo	Landholder	35-1, Hari Ghose Street	ditto

M

2436	Mahalanabis, Prashanta Chandra, BSc, MA (Cantab).	Professor, Presidency College	86-1, College Street	Brahmo
2437	Mahanty, Purna Chandra, MSc	Lecturer, University College	92, Upper Circular Road	Hindu
2438	Mahindra, Hem Chandra, BA (Oxon)	Assistant, Burmah Shell Co of India, Ltd	Hong Kong House	ditto
2439	Mahindra, Kailash Chandra	Partner, Martin & Co	12, Mission Row	ditto
2440	Mahomed, Sanaullah, MA	Professor, Presidency College	86-1, College Street	Mahomedan
2441	Mahomed, Yar Mahomed, BA	Audit Inspector, Calcutta Corporation	Municipal Office	ditto
2442	Maitra, Ashutos, MA	Demonstrator, Presidency College	86-1, College Street	Hindu
2443	Maitra, Jagadish Chandra	Sub-Station Superintendent, C E S C, Ld	Victoria House	ditto
2444	Maitra, Manmohan, BSc (Vic)	Junior City Architect, Calcutta Corporation	Municipal Office	Brahmo
2445	Maitra, Nalini Kanta, MA	Assistant, Martin & Co	12, Mission Row	Hindu

2446	Maitra, Somnath	Professor, Presidency College	86-1, College Street	ditto
2447	Maitra, Sushil Kumar, MA, PhD	Lecturer, University College	Senate House	ditto
2448	Maity, Haripada, MA	Lecturer, University College	Senate House	ditto
2449	Majumdar, Anil Kumar, MSc	Demonstrator, St Xavier's College	30, Park Street	ditto
2450	Majumdar, B	Director, Enterpriser's Organisation, Ld	14, Clive Street	ditto
2451	Majumdar, B B	Secretary, Metropolitan Insurance Co, Ld	28, Pollock Street	ditto
2452	Majumdar, Benjamin Upendranath	Superintendent, Central Forms Store	166, Dharamtala Street	Christian
2453	Majumdar, Bhabendra Nath, BE	Executive Engineer, Public Health Deptt, Bengal	3, Charnock Place	Hindu
2454	Majumdar, Charu Chandra, BL	Head Assistant, Health Office, Calcutta Corporation	Municipal Office	ditto
2455	Majumdar, Dwijendra Kumar, MA	Demonstrator, Presidency College	86-1, College Street	ditto
2456	Majumdar, Girija Prasanna	Professor, Presidency College	86-1, College Street	ditto
2457	Majumdar, H N	Accounts Officer, E I R	E I R House	ditto
2458	Majumdar, Manibhusan	Agent, The New Bengal Bank, Ld	15, Clive Street	ditto
2459	Majumdar, Mrinalkanti, BA	Overseer, Government of India Press	8, Hastings Street	ditto
2460	Majumdar, Nagendra Nath, MA, BT	Head Master, Hindu School	College Square	ditto
2461	Majumdar, Nani Gopal, MA, FRASB	Superintendent, Archl. Section, Eastern Circle	Indian Museum	ditto
2462	Majumdar, N K	Registrar of Joint Stock Companies, Bengal	Treasury Buildings	ditto
2463	Majumdar, Nripendranath	Director of Programmes, All-India Radio	1, Garstin Place	ditto
2464	Majumdar, Pramadacharan	Professor, Bangabasi College	25-1, Scott Lane	ditto
2465	Majumdar, Pramada Nath, BL	Assistant Manager, Bengal Central Bank, Ld	86, Clive Street	ditto
2466	Majumdar, S C	Superintending Engineer, S W Circle, P W D	Treasury Buildings	ditto
2467	Majumdar, Surendra Chandra	Professor, Presidency College	86-1, College Street	ditto

No.	Names.	Style or calling.	Residence or place of business.	Religion.
2468	Majumdar, Suresh Chandra	Director, *Ananda Bazar Patrika*, Ld	1, Burman Street	Hindu
2469	Mallik, Anath Nath	Landholder	4, Outram Street	ditto
2470	Mallik, Des Raj	Assistant Audit Officer, Chief Auditor's Office, E I Ry	E I R House	ditto
2471	Mallik, Dinendra (Kumar)	Landholder	Marble Palace, 46, Mooktaram Babu Street.	ditto
2472	Mallik, Ganesh Chandra (Kumar)	Landholder	25, Debendra Mallik Street	ditto
2473	Mallik, Gourcharan (Kumar)	Landholder	25, Debendra Mallik Street	ditto
2474	Mallik, Indra Chandra	Partner, Bengal Paint Supply Co	16, Bonfields Lane	ditto
2475	Mallik, Jatindramohan	Landholder	24, Darponarain Tagore Street	ditto
2476	Mallik, Jitendra Nath	Landholder	Marble Palace, 46, Mooktaram Babu Street	ditto
2477	Mallik, Jnanendranath	Landholder	18, Radhanath Mallik Lane	ditto
2478	Mallik, Kartic Churn (Kumar)	Director, Bengal Bonded Warehouse Association	102, Clive Street	ditto
2479	Mallik, Krishnapada, MSc	Demonstrator, St Xavier's College	30, Park Street	ditto
2480	Mallik, Madan Mohan	Landholder	365, Upper Chitpore Road	ditto
2481	Mallik, Manick Lal	Zamindar	123, Grey Street	ditto
2482	Mallik, P	Proprietor, P Mallik & Co	81, Clive Street	ditto
2483	Mallik, P, MA	Director, Bharat Electric Bulb Works, Ld	2, Lyons Range	ditto
2484	Mallik, P C, BSc	Partner, Bengal Publicity Co	Stephen House	ditto
2485	Mallik, Pannalal	Landholder	26-1, Prasanna Kumar Tagore Street	ditto
2486	Mallik, Pradyumna K	Landholder	7, Prasanna Kumar Tagore Street	ditto
2487	Mallik, R N, BA	Assistant, P K Ghose & Co	100, Clive Street	ditto

2488	Mallik, Shailendra Nath	Landholder	18, Radhanath Mallik Lane	ditto
2489	Mallik, Shibdas	Landholder	34, Durponarain Tagore Street	ditto
2490	Mallik, Tarak Nath	Landholder	364, Upper Chitpore Road	ditto
2491	Mallik, Uditendu Prakash, BE, CE	Proprietor, Hope Johnstone & Sons	9, Hastings Street	ditto
2492	Mandal, Anil Kumar, MA	Lecturer, Scottish Church College	4, Cornwallis Square	Christian
2493	Mandal, Baidyanath, BSC	Proprietor, B N Mandal & Co	22, Canning Street	Hindu
2494	Mandal, Bibhuti Bhusan, MSC	Professor, Scottish Church College	4, Cornwallis Square	ditto
2495	Mandal, D N, MA	Professor, St Paul's Cathedral College	33-1, Amherst Street	Christian
2496	Mandal, Hrit Kumar, MA	Principal, Collin's Institute	140, Dharamtala Street	ditto
2497	Mandal, J C, MA	Professor, St Paul's Cathedral College	33-1, Amherst Street	Hindu
2498	Mandal, Trivangamurari, MSC	Professor, Vidyasagar College	39, Shankar Ghose Lane	ditto
2499	Mandaneswara, Sri, MA	Probationary Accounts Officer, E B R	3, Koilaghat Street	ditto
2500	Marik, Tarapada	Assistant Engineer, City Division, P W D	Writers' Buildings	ditto
2501	Master, N F, ASAA	Accountant	265, Bowbazar Street	Zoroastrian
2502	Mathur, K, BL	Deputy Chief Engineer, Chief Engineer's Office, E I R	E I R House	Hindu
2503	Maulik, Ramendra	Superintendent, Corporation Press	Municipal Office	ditto
2504	Medora, Nariman Maneckjee, BA	Acting Branch Manager, British India General Insurance Co, Ld	2, Old Court House Corner	Zoroastrian
2505	Mehra, Desraj	Manager, Punjab National Bank, Ld	135-36, Canning Street	Hindu
2506	Mehta, Gagan Bihari Lallubhai, MA	Manager, Scindia Steam Navigation Co, Ld	100, Clive Street	ditto
2507	Mehta, Gulab Chand Baid	Staff Assistant, Imperial Bank of India	3, Strand Road	Jain
2508	Mehta, Hiralal	Landholder	25, Pollock Street	Hindu
2509	Mehta, Pherojsha Merwanji Nanabhai	Proprietor, M N Mehta & Co	65, Ezra Street	Zoroastrian

No.	Names.	Style or calling.	Residence or place of business.	Religion.
2510	Menon, C T N, BA	Superintendent, Commercial Intelligence Department	1, Council House Street	Hindu
2511	Menon, Kammathel R. Raghavn	Accountant, Reserve Bank of India	8, Council House Street	ditto.
2512	Mian, Moyenuddia	Head Assistant, Bengal Secretariat, P W D	Writers' Buildings	Mahomedan
2513	Mitra, Akshaya Kumar	Treasurer, Calcutta Corporation	Municipal Office	Hindu
2514	Mitra, Animendra Krishna	Landholder	20-B, Nilmani Mitter Street	ditto
2515	Mitra, Ashutos Chandra	Landholder	13, Beadon Street	ditto
2516	Mitra, Basanta Kumar	Landholder	34, Shampukur Street	ditto
2517	Mitra, Bijaya Krishna	Manager, Caledonia Brush Works	10-B, Nimtolla Ghat Street	ditto
2518	Mitra, Charu Gopal	Head Assistant, Central Stationery Office	3, Church Lane	ditto
2519	Mitra, Durgapada, BA	Manager, R Laugin & Co	148, Bow Bazar Street	ditto
2520	Mitra, G K	Director, Kuver Ld	84, Clive Street	ditto
2521	Mitra, Gopendra Nath, Mech E (Leeds)	Landholder	14-1, Bechu Chatterjee Street	ditto
2522	Mitra, Gopi Krishna	Asstt Engineer, Bengal Telephone Corporation, Ld	8, Hare Street	ditto
2523	Mitra, Hiran Kumar	Landholder	1, Jhamapukur Lane	ditto
2524	Mitra, Jatishchand	Landholder	7-5, Beadon Street	ditto
2525	Mitra, Jiban Krishna	Landholder	2, Raja Rajballav Street	ditto
2526	Mitra, Jitendra Krishna	Cashier, P & O Banking Corporation, Ld	1, Fairlie Place	ditto
2527	Mitra, Jnanendra Kumar, BE	Building Surveyor, Calcutta Corporation	Municipal Office	ditto
2528	Mitra, Jyotirbikas, MA	Head Master, Saraswati Institution	62, Shampukur Street	ditto
2529	Mitra, Kali Shankar	Engineer and Contractor	48, Raja Naba Kissen Street	ditto

2530	Mitra, Kumar	Deputy Superintendent, Jetty and Wharves, Port Commissioners'	Strand Road	ditto
2531	Mitra, Kumar Krishna	Landholder	14, Ahiritola Street	ditto
2532	Mitra, Lalit Mohan	Assistant, Andrew Yule & Co, Ld	8, Clive Row	ditto
2533	Mitra, Manabendra Kissen	Merchant and Landholder	19, Nilmoni Mitter Street	ditto
2534	Mitra, Manmatha Nath, MA	Head Assistant, Board of Revenue, Bengal	Writers' Buildings	ditto
2535	Mitra, Nirmal Chandra, MSc	Secretary and Head Master, Mitra Institution	55, Harrison Road	ditto
2536	Mitra, Nirmal Chandra, MA	Professor, St Xavier's College	30, Park Street	Christian
2537	Mitra, Paresh Chandra, BSc (Eng)	Proprietor, P C Mitra & Co	20, British Indian Street	Hindu
2538	Mitra, Paritosh, MSc	Accountant, Calcutta Corporation	Municipal Office	ditto
2539	Mitra, P C	Asstt Secretary, Port Commissioners' Office	Strand Road	ditto
2540	Mitra, Prafulla Chandra, MA, PhD	Professor, University College	92, Upper Circular Road	ditto
2541	Mitra, Prafulla Chandra, BA	Head Draftsman, No. I Drawing Office, Survey of India	13, Wood Street	ditto
2542	Mitra, Prakash Krishna	Manager, J K Mitter & Co	2, Lyons Range	ditto
2543	Mitra, Pramatha Nath	Sr Accountant, American Express Co, Inc	14, Government Place, East	ditto
2544	Mitra, Pravas Chandra	Partner, Mitra & Chaudhuri	103, Clive Street	ditto
2545	Mitra, Pravat Kumar	Landholder	2, Loudon Street	ditto
2546	Mitra, Satish Chandra	Partner, Mitra & Chaudhuri	103, Clive Street	ditto
2647	Mitra, Satya Charan	Landholder	32, Manicktala Street	ditto
2548	Mitra, Satish Chandra, BSc (Eng)	Deputy Director of Industries, Bengal	40-1A, Free School Street	ditto
2549	Mitra, S C, MA	Secretary, Indian Mutual Life Association, Ld	8-2, Hastings Street	ditto

No.	Names.	Style or calling.	Residence or place of business.	Religion.
2550	Mitra, Shailendra Nath, MA	Lecturer, University College	Senate House	Hindu
2551	Mitra, Shanti Kumar, MA	Professor, Scottish Church College	4, Cornwallis Square	ditto
2552	Mitra, Sharat Chandra	Landholder	34, Shampukur Street	ditto
2553	Mitra, Shishir Kumar, DSc	Professor, University College	92, Upper Circular Road	ditto
2554	Mitra, S K, MA	Partner, S K Mitter & Co	84-A, Clive Street	ditto
2555	Mitra, S N, BSc, B Com, ACA	Accountant	1, Grants Lane	ditto
2556	Mitra, S N	Superintendent, C A O's Office, E I R	E I R House	ditto
2557	Mitra, S R, BA	Partner, Mitra Banerjee & Co	7, Lyons Range	ditto
2558	Mitra, Subodh Chandra	Cashier, Imperial Chemical Industries (India), Ld	18, Strand Road	ditto
2559	Mitra, Sudhangshu Bhusan	Mang Director, India Equitable Insurance Co	102, Clive Street	ditto
2560	Mitra, Suhrit C, MA, PhD	Lecturer, University College	Senate House	ditto
2561	Mitra, Surendra Nath	Landholder	65-4, College Street	ditto
2562	Mitra, Sushil Chandra, MA, DLitt	Director, "Vichitra"	27-1, Faria Pukur Street	ditto
2563	Mitra, Tinkari	Executive Engineer, City Divn, P W D	Writers' Buildings	ditto
2564	Moddi, C C	Resdt Branch Secretary, Allianz Und Stuttgarter Verein Insurance Co, Ld	7, Royal Exchange Place	ditto
2565	Modi, Magaldal, G	Assistant Manager, American Foreign Insurance Association	8, Clive Street	ditto
2566	Mohan, Anand	Assistant, Commercial Manager, E I R	E I R House	ditto
2567	Momin, Md. Abdul (Khan Bahadur), CIE	Director, Eastern Federal Union Insurance Co, Ld	9, Clive Street	Mahomedan

2568	Motichand, Jeewanlal	Consulting Director, Jeewanlal (1929), Ld	11, Clive Street	Hindu
2569	Mozaffaruddin, Syed (Maulvi), MA	Professor, Islamia College	8, Wellesley Street	Mahomedan
2570	Mudaliar, Mahadeva Madras, MA	Officer in charge No. I. Drawing Office, Survey of India	13, Wood Street	Hindu
2571	Mukherji, A B	Superintendent, C A O's Office, E I R	E I R House	ditto
2572	Mukherji, A K, PhD (Lond.)	Partner, Bengal Publicity Co	Stephen House	ditto
2573	Mukherji, Amulyadhan, MA, BT	Sr Accountant, A G's Office, Bengal	Treasury Buildings	ditto
2574	Mukherji, Anadi Nath	Head Cashier, Macneill & Co	2, Fairlie Place	ditto
2575	Mukherji, Ananda Lal	Landholder	1-1E, Hurtuki Bagan Lane	ditto
2576	Mukherji, Anath Nath	Secretary, Baghbazar Reading Library	65-2A, Raja Raj Bullav Street	ditto
2577	Mukherji, Anil Chandra, MA	Sr Accountant, A G's Office, Bengal	Treasury Buildings	ditto
2578	Mukherji, Ardhendu Bhusan, MA, BL	Assistant Manager, Bengal Provincial Co-operative Bank, Ld	Writers' Buildings	ditto
2579	Mukherji, Asoke Jiban	Auditor, C A's Office, E I R	E I R House	ditto
2580	Mukherji, Benoy Kumar, M.Sc	Demonstrator, St Xavier's College	30, Park Street	ditto
2581	Mukherji, Bhaskar, BSc, BA (Cantab)	Special Officer, Calcutta Corporation	Municipal Office	ditto
2582	Mukherji, Bholanath, MA	Professor, Scottish Church College	4, Cornwallis Square	ditto
2583	Mukherji, Bibhuti Bhusan	General Secretary, East and West Insurance Co, Ld	37, Strand Road	ditto
2584	Mukherji, Bijali Kumar	Partner, Ramlal Mookerjee & Son	41, Strand Road	ditto
2585	Mukherji, Bijaya Kumar	Partner, Ramlal Mookerjee & Son	41, Strand Road	ditto
2586	Mukherji, Birendra Nath	Partner, Martin & Co	12, Mission Row	ditto
2587	Mukherji B N, BCom, GDA	Auditor	64, Sitaram Ghose Street	ditto

No.	Names.	Style or calling	Residence or place of business.	Religion.
2588	Mukherji, B P	Director, Holmes, Wilson & Co, Ld	Norton Buildings	Hindu
2589	Mukherji, C P, B A, A S A A (Lond)	Officer, Hindusthan Co-operative Insurance Society, Ld	Hindusthan Buildings	ditto
2590	Mukherji, Dhirendra Nath, MA	Professor, City College	102-1, Amherst Street	ditto
2591	Mukherji, Dhirendra Nath, MA	Professor, St Xavier's College	30, Park Street	ditto
2592	Mukherji, Dhirendra Nath	Partner, A C Banerjee & Co	3-1, Bankshall Street	ditto
2593	Mukherji, Dwijapada	Sr Accountant, A G's Office, Bengal	Treasury Buildings	ditto
2594	Mukherji, Dwijendra Nath	Assistant, Martin & Co	12, Mission Row	ditto
2595	Mukherji, Dwijendra Nath	Director, Great Eastern Exchange, Ld	29, Park Street	ditto
2596	Mukherji, Gokul Krishna, BA	Assistant Treasurer, Calcutta Corporation	Municipal Office	ditto
2597	Mukherji, H	Managing Proprietor, Search-Light Clearing Agency	19, Strand Road	ditto
2598	Mukherji, Harendra Kumar, PhD	Professor, Calcutta University	Senate House	Christian
2599	Mukherji, Hemanta Kumar	Secretary, Y M C A, College Branch	86, College Street	ditto
2600	Mukherji, Hem Chandra	Proprietor, Hem Chandra Mukherji & Sons	47/1, Bechu Chatterji Street	Hindu
2601	Mukherji, Hiralal	Sub-Accountant, Imperial Bank of India	Strand Road	ditto
2602	Mukherji, Jatindra Nath	Partner, The Eastern Merchants	14, Old Court House Lane	ditto
2603	Mukherji, Jatindra Nath, MA	P Ajto Assessor, Calcutta Corporation	Municipal Office	ditto
2604	Mukherji, Jatish Chandra	Merchant	43, Beadon Street	ditto
2605	Mukherji, Jitendra Nath	Partner, Martin & Co	12, Mission Row	ditto
2606	Mukherji, J N	Partner, The Eastern Merchants	14, Old Court House Lane	ditto
2607	Mukherji, Jnanendra Nath, DSc	Professor, University College	92, Upper Circular Road	ditto

2608	Mukherji, Jogesh Chandra, MA	Lecturer, University College	92, Upper Circular Road	ditto
2609	Mukherji, Kamal Krishna, BSc, BE	Engineer, T N Banerjea, Ld	6, Hastings Street	ditto
2610	Mukherji, Kamal Krishna, MA	Assistant Head Master, Metropolitan Institution (Main)	39, Sankar Ghose Lane	ditto
2611	Mukherji, K C	Chemist, Hoyle, Robson, Barnett & Co (India), Ld	Tower House	ditto
2612	Mukherji, K P	Auditor, C A's Office, E I R	E I R House	ditto
2613	Mukherji, Krishna Gopal	Partner, Calcutta Supply Agency	8, Canning Street	ditto
2614	Mukherji, Makhan Lal, MA, BL	Accountant, Central Bank of India, Ld	100, Clive Street	ditto
2615	Mukherji, Makhan Lal	Director, Calcutta Insurance, Ld	86, Clive Street	ditto
2616	Mukherji, Manmatha Nath	P W Sr Accountant, A G's Office, Bengal	Treasury Buildings	ditto
2617	Mukherji, Manmatha Nath	Director, Calcutta Insurance, Ld	86, Clive Street	ditto
2618	Mukherji, M N	Director, Bengal Central Bank, Ld	86, Clive Street	ditto
2619	Mukherji, M N	Engineer	12, Old Post Office Street	ditto
2620	Mukherji, N, BA	Proprietor, Art Press	20, British Indian Street	ditto
2621	Mukherji, Nagendra Nath, MSc	Professor, St Xavier's College	30, Park Street	ditto
2622	Mukherji, Nagendra Nath	Assistant Assessor, Calcutta Corporation	Municipal Office	ditto
2623	Mukherji, N G	Partner, General Engineering Co	25-B, Swallow Lane	ditto
2624	Mukherji, Panchanan	Head Assistant, L S-G Branch, Bengal Secretariat	Writers' Buildings	ditto
2625	Mukherji, Peari Mohan	Proprietor and Manager, Universal Trading Union	9, Dalhousie Square	ditto
2626	Mukherji, Phanindra Nath	Landholder	33-1, Beadon Street	ditto
2627	Mukherji, Purnendu Nath, BSc	Assistant Chemical Examiner to the Govt of Bengal	Medical College	ditto
2628	Mukherji, Rabin	Assistant, Martin & Co	12, Mission Row	ditto
2629	Mukherji, Ram Chandra	Superintendent, Traffic Office, Martin & Co	12, Mission Row	ditto

No	Names.	Style or calling	Residence or place of business.	Religion.
2630	Mukherji, Ramoni Nath	Cashier, Martin & Co	12, Mission Row	Hindu
2631	Mukherji, Sadhan Gopal	Partner, Calcutta Supply Agency	8, Canning Street	ditto
2632	Mukherji, Santosh Kumar	Sr Accountant, A G's Office, Bengal	Treasury Buildings	ditto
2633	Mukherji, Satish Chandra	Assistant, Gillanders Arbuthnot & Co	8, Clive Street	ditto
2634	Mukherji, Satkari, MA, PhD	Lecturer, University College	Senate House	ditto
2635	Mukherji, S C, BA, GD, ARC, AIIA	Architect	8-2, Hastings Street	ditto
2636	Mukherji, Shachindranath, BA, LLB	Accountant, Martin & Co	12, Mission Row	ditto
2637	Mukherji, Shishir Kumar	Sr Accountant, A G's Office, Bengal	Treasury Buildings	ditto
2638	Mukherji, Shital Chandra, MSc	Accountant, Army Factory Accounts	6, Esplanade, East	ditto
2639	Mukherji, Shripada	Accountant, Army Factory Accounts	6, Esplanade, East	ditto
2640	Mukherji, S K	Asstt District Traffic Superintendent, E B R	3, Koilaghat Street	ditto
2641	Mukherji, S K, GDA, RA	Auditor	12, Old Post Office Street	ditto
2642	Mukherji, S N, FSAA	Incorporated Accountant	1-B, Old Post Office Street	ditto
2643	Mukherji, Subodh Kumar, BE	Building Surveyor, Calcutta Corporation	Municipal Office	ditto
2644	Mukherji, Sudhanath, BL	Assistant Registrar, Calcutta University	Senate House	ditto
2645	Mukherji, Surendra Nath	2nd Grade Assistant, Imperial Bank of India	Strand Road	ditto
2646	Mukherji, Suresh Chandra, BA	Officiating Accountant, D A-G P and T Office	7, Koilaghat Street	ditto
2647	Mukherji, Sushil Kumar	Partner, Jardine Menzies & Co	14, Hare Street	ditto
2648	Mukherji, Sushil Kumar	Proprietor, W C Mukherji & Co	37, Canning Street	ditto
2649	Mukherji, Tarak Nath, MA	Professor, Ripon College	24, Harrison Road	ditto

2650	Mukherji, Tarapada, MA	Professor, Presidency College	86 1, College Street	ditto
2651	Mukherji, Tarapada, MA	Professor, Vidyasagar College	39, Shankar Ghose Lane	ditto
2652	Mukherji, Tulsi Charan, MA	Senior Auditor, E B R	3, Koilaghat Street	ditto
2653	Muktadir, Syed Abdul	Supervisor, Drainage, Calcutta Corporation	Municipal Office	Mahomedan
2654	Musa, Mahammad (Khan Bahadur), MA	Principal, Calcutta Madrassah	Wellesley Square	ditto
2655	Musa, Mahammad	Manager, Star of India	3, Wellesley Place	ditto

N

2656	Nag, Kalidas, MA DLitt	Lecturer, University College	Senate House	Brahmo
2657	Nahar, Bijaya Sing	Landholder	48, Indian Mirror Street	Hindu
2658	Nahar, Bikram Singh	Landholder	50, Indian Mirror Street	ditto
2659	Nahar, Kesri Sing	Landholder	26, Indian Mirror Street	ditto
2660	Nahar, P S	Landholder	26, Indian Mirror Street	ditto
2661	Naidu, S L R	Personnel Officer, E B R	3, Koilaghat Street	ditto
2662	Naik, K M. GDA	Director, National Fire and General Insurance Co, Ld	7, Council House Street	ditto
2663	Nan, Sudhir Chandra, BA	Merchant	18, Bethune Row	ditto
2664	Nanavaty, Dady N C	Sub-Agent, Central Bank of India, Ld	100, Clive Street	Zoroastrian
2665	Nandi, A C	Assistant Accounts Officer, E I R	E I R House	Hindu

No.	Names.	Style or calling	Residence or place of business.	Religion.
2666	Nandi, Akshay Kumar	Proprietor, Nandy Brothers	34, Dharamtola Street	Hindu
2667	Nandi, Durgapada	Accountant, W W Department, Calcutta Corporation	Municipal Office	ditto
2668	Nandi, H D	Secretary, Indian Cycle Traders' Association	50-6, Dharamtala Street	ditto
2669	Nandi, K D	Managing Director, Great Indian Motor Works, Ld	12, Government Place, East	ditto
2670	Nandi, Kristo Lal, MA	Officiating Accountant, D A-G P and T Office	7, Koilaghat Street	ditto
2671	Nandi, Nalin Bihari	Secretary, George O Penn (India), Ld	22, Chowringhee	ditto
2672	Nandi, N D, BE, AMIE	Engineer	79-24B, Lower Circular Road	ditto
2673	Nandi, P K	Assistant Valuer, Calcutta Improvement Trust	5, Clive Street	ditto
2674	Nandi, Prafulla, MA (Cantab), BSc, ACA	Chartered Accountant	6, Hastings Street	ditto
2675	Nandi, Praphulla Ch, BSc (Cal), MA(Cantab)	Professor, Vidyasagar College	39, Shankar Ghose Lane	ditto
2676	Nandi, Shambhu Nath	Landholder	37, Hari Ghose Street	ditto
2677	Nandi, S N	Assistant Engineer, Port Commissioners' Office	Strand Road	ditto
2678	Nandi, Tarini Charan	Landholder	2-B, Shankar Ghose Lane	ditto
2679	Narielwala, M B, BA, LLB	Law Officer, Central Bank of India, Ld	100, Clive Street	Zoroastrian
2680	Nazir, S S	Branch Secretary, Oriental Govt Security Life Assurance Co, Ld	2, Clive Row	ditto
2681	Nazir, Shaikh Mohammed, BSc (Pun)	Assistant Engineer, Indian Stores Department (Inspection)	6, Esplanade East	Mahomedan
2682	Nevatia, S N	Managing Director, Anglo-American Oil Products Co (India), Ld	Stephen House	Hindu
2683	Nigam, Onkarnath	Partner, Central India Machine Co	155, Dharramtala Street	ditto

2684	Nigam, Srishtinath	Partner, Central India Machine Co	155, Dharamtala Street	ditto
2685	Niyogi, Anil Chandra, BA	Landholder	1-2, Kaliprasad Chakravarti Street	ditto
2686	Niyogi, Kumudini Mohan	News Editor, Associated Press of India	7, Hare Street	ditto
2687	Niyogi, Panchanan, MA, PhD	Professor, Presidency College	86-1, College Street	ditto
2688	Niyogi, Phanindra Chandra	Landholder	1-2, Kaliprasad Chakravarti Street	ditto
2689	Niyogi, Pravat Chandra, BE	Executive Engineer, Suburban Division, P W D	Writers' Buildings	ditto

O

2690	Ojha, Amritlal, MA MIME, FRSA (Lond)	Director National Cement Mines & Industries, Ld	10, Clive Row	Hindu

P

2691	Pal, Ashutos, MSc	Assistant, Martin & Co	12, Mission Row	Hindu
2692	Pal, Bholanath, MSc	Professor, St Xavier's College	30, Park Street	ditto
2693	Pal, Durgacharan	Head Assistant, Bengal Secretariat, Police Department	Writers' Buildings	ditto
2694	Pal, Gopeshwar, MSc	Lecturer, University College	Senate House	ditto
2695	Pal, Hari Shankar (Sir), Kt	Proprietor, Butto Kristo Paul & Co	30, Sovabazar Street	ditto
2696	Pal, Hemendra Chandra	Director, Indian Economic Insurance Co, Ld	15, Clive Street	ditto
2697	Pal, Jahar Lal	Partner, A B D R & Co	25-B, Swallow Lane	ditto
2698	Pal, Jyotish Chandra	Auditor, W W Extension, Calcutta Corporation	Municipal Office	ditto
2699	Pal, Jyotish Chandra, MA	Professor, St Xavier's College	30, Park Street	ditto

No.	Names.	Style or calling.	Residence or place of business.	Religion.
2700	Pal, Netai Charan	Director, Glory of the East Insurance Co, Ld	1, Bonfields Lane	Hindu
2701	Pal, Satyendra Nath	Landholder	53, Mirzapore Street	ditto
2702	Pal, U N	Manager, Indian Economic Insurance Co, Ld	15, Clive Street	ditto
2703	Pal Chaudhuri, Girija Nath, BA (Rai Bahadur)	Manager, Nadia Engineering Co	79-B, Lower Circular Road	ditto
2704	Pal Chaudhuri, Krishnaballabh, MA, ACA	Chief Accountant, Karam Chand Thapar & Bros, Ld	5, Royal Exchange Place	ditto
2705	Palit, Panchanan	Secretary, Paul & Chakravarty, Ld	83, Old China Bazar Street	ditto
2706	Paranandi, Suryanarain, BA	Secretary, Karam Chand Thapar & Bros, Ld	5, Royal Exchange Place	ditto
2707	Patel, Y R	Branch Manager, New India Assurance Co, Ld	100, Clive Street	ditto
2708	Patney, Desh Raj	Staff Assistant, Imperial Bank of India	3, Strand Road	ditto
2709	Pathak, P J	General Manager & Director, Jeewanlal (1929), Ld	101, Clive Street	ditto
2710	Pathak, S K	Director, Mutual Indemnity & Finance Corpn. (India), Ld	10, Government Place	ditto
2711	Patra, Satya Charan	Accountant, D A-G, P and T Office	7, Koilaghat Street	ditto
2712	Poddar, Hanuman Prasad	Merchant	10, Chittaranjan Avenue	ditto
2713	Poddar, R P	Merchant	5, Lord Sinha Road	ditto
2714	Powvala, Maneck Kawasji, MA, LLB	Assistant Sales Manager, Tata Iron and Steel Co, Ld	100, Clive Street	Zoroastrian
2715	Pramanick, Haridas	Assistant Audit Officer, E B R	3, Koilaghat Street	Hindu
2716	Primlani, M H	Partner, Oxford Book and Stationery Co	17, Park Street	ditto

2717	Primlani, S H, BA	Partner, Oxford Book and Stationery Co	17, Park Street	ditto
2718	Puri, D C	Asstt Branch Secretary, Oriental Govt Security Life Assurance Co, Ld	2, Clive Row	ditto
2719	Puri, Gur Charan Das	Staff Officer, Imperial Bank of India	3, Strand Road	ditto
2720	Puri, Nand Lal, BA, LLB	Agent, Central Bank of India, Ld	100, Clive Street	ditto
2721	Purohit, K J, FSAA	Partner, Bathboi & Purohit	6, Hastings Street	ditto
2722	Pyne, Satyendra Lal, MA, BL	Asstt Accountant-General, Bengal	Treasury Buildings	ditto

Q

2723	Quadir, Anwarul (Khan Sahib) (Maulvi) MA	2nd Inspector of Schools, Presidency Division	40-1A, Free School Street	Mahomedan

R

2724	Rafique, Mohamad	Resident	19, Zakariah Street	Mahomedan
2725	Rahman, Z A	Merchant	11, Colootolla Street	ditto
2726	Rajabally, Nurmahomed	Supervisor, Adamjee Hajee Dawood & Co, Ld	4, Dalhousie Square, East	ditto
2727	Rajagopalan, Annasamy Iyengar BA	P A to A R Dalal, Tata Sons Ld	100, Clive Street	Hindu
2728	Rajagopalan, R, BA	Auditor, C A's Office, E I R	E I R House	ditto
2729	Rajgarhia, Babulall	Landholder	13, Syed Salley Lane	ditto
2730	Rajgarhia, Ramprasad	Governing Director, Rajgarhia Brothers, Ld	161, Muktaram Babu Street	ditto
2731	Rakshit, Narendra Nath, MSc	Offg Accountant, D A-G, P & T Office	7, Koilaght Street	ditto
2732	Ram, Beli	Superintendent, Explosives Office	1, Council House Street	ditto
2733	Ramanujan, N V	Accountant, D A-G, P & T Office	7, Koilaghat Street	ditto

No.	Names.	Style or calling.	Residence or place of business.	Religion.
2734	Ram. Chandra (II), BA	Accountant, D A-G, P & T Office	7, Koilaghat Street	Hindu
2735	Ramachandran, T N, MA	Assistant Superintendent, Archl Survey, Eastern Circle	Indian Museum	ditto
2736	Rangaswami, M S, BA	Accountant, E B R	3, Koilaghat Street	ditto
2737	Rao, Gundabattula Narsinga	Manager, Foundry & Railway Equipment Co	100, Clive Street	ditto
2738	Rao, J Ram, MA	Probationary Accounts Officer, E B R	3, Koilaghat Street	ditto
2739	Rao, Katre Seshagiri, MA	Examiner of Patents	1, Council House Street	ditto
2740	Rao, P Mohan	Chief Accounts Officer, E I R	E I R House	ditto
2741	Rao, V R Venkataramana	Manager, J B Advani & Co, Ld	104. Old China Bazar Street	ditto
2742	Rashid, K A	Accountant, C A O's Office, E I R	E I R House	Mahomedan
2743	Rasul, Ghulam, BA	Dy Asstt Controller, Army Factory Accounts	6, Esplanade, East	ditto
2744	Ray, A, BA	Associate Editor, Calcutta Commercial Gazette	2, Royal Exchange Place	Hindu
2745	Ray, Abani Bhusan, BA	Landholder	20, Hara Chandra Mullick Lane	ditto
2746	Ray, Ajit Kumar, BL	Manager, Bengal Central Bank, Ld	86, Clive Street	ditto
2747	Ray, Alauddin	Asstt Engineer, Inspection, Indian Stores Deptt	6, Esplanade, East	Mahomedan
2748	Ray, A M, MA, BCom	Accountant	1 & 2, Old Post Office Street	Hindu
2749	Ray, Amiya Nath, ACA	Partner, Ray & Ray	6, Church Lane	Brahmo

2750	Ray, Anil Chandra, BA	Agency Manager, Hindu Mutual Life Assurance, Ltd	309, Bowbazar Street	Hindu
2751	Ray, Anil Krishna, BE	Building Surveyor, Calcutta Corporation	Municipal Office	ditto
2752	Ray, A P	Assistant, McLeod & Co	28, Dalhousie Square	ditto
2753	Ray, Ashutos	Zamindar	36, Panchanan Ghose Lane	ditto
2754	Ray, B	Manager, General Assurance Society, Ld	8, Esplanade, East	ditto
2755	Ray, Bankim Ch, MA	Officer, Hindusthan Co-operative Insurance Society, Ld	Hindusthan Buildings	ditto
2756	Ray, Bankim Chandra, BSc	Lighting Superintendent, Calcutta Corporation	Hogg Street	ditto
2757	Ray, Bankim Chandra, MSc	Lecturer, University College	92, Upper Circular Road	ditto
2758	Ray, Bankim Chandra, BA	Partner, N L Ray & Co	7, Lyons Range	ditto
2759	Ray, Basanta Kumar, BA	Accountant, E B R	3, Kaylaghat Street	ditto
2760	Ray, Bhupendra Nath	Sr Accountant, A G's Office, Bengal	Treasury Buildings	ditto
2761	Ray, Bhusan Chandra, MA	Head Master, Oriental Seminary	336, Upper Chitpur Road	ditto
2762	Ray, Bidhu Bhusan, DSc	Lecturer, University College	92, Upper Circular Road	ditto
2763	Ray, Bijaya Kumar, MA	Lecturer, Ripon College	24, Harrison Road	ditto
2764	Ray, Birendra Binode, MA	Professor, Scottish Church College	4, Cornwallis Square	ditto
2765	Ray, Bishnuprasad (*Kumar*)	Landholder	24-1, Darmahatta Street	ditto
2766	Ray, Biswanath (*Kumar*)	Director, Glory of the East Insurance Co, Ltd	25-B, Swallow Lane	ditto
2767	Ray, B K, BSc, GDA, RA	Registered Accountant	17, Mangoe Lane	ditto
2768	Ray, B K	Partner, K Ray & Brothers	6, Hastings Street	ditto
2769	Ray, B N	Partner, K Ray & Brothers	6, Hastings Street	ditto
2770	Ray, Bratishankar, MSc, PhD	Lecturer, Calcutta University	92, Upper Circular Road	ditto
2771	Ray, Debendra Nath, MA	Lecturer, Bethune College	181, Cornwallis Street	ditto
2772	Ray, Dhirendra Nath	Ex. Engineer, Hijli Division, P W D	Writers' Buildings	ditto

No.	Names.	Style or calling.	Residence or place of business.	Religion.
2773	Ray, Gouri Shankar	Accountant, Sonar Bangla Bank, Ld	137, Canning Street	Hindu
2774	Ray, Gunendra Krishna	Landholder	102-3-A, Beniatola Street	ditto
2775	Ray, Haimaja Ranjan, BE	Constructional Assistant to C A, Calcutta Corporation	Municipal Office	ditto
2776	Ray, Harendra Nath, MSc, PhD	Lecturer, University College	92, Upper Circular Road	ditto
2777	Ray, Hem Chandra, MA, PhD	Lecturer, University College	Senate House	ditto
2778	Ray, Jatindra Nath	Director, Great Eastern Hotel, Ld	1, 2 & 3, Old Court House Street	ditto
2779	Ray, Jitendra Nath	Managing Agent, East India Cotton Mills	120, Darmahatta Street	ditto
2780	Ray, Jitendra Nath	Sr Superintendent, Reserve Bank of India	8, Council House Street	ditto
2781	Ray, K, BSc, CPE (Glas)	Engineer, K Ray & Bros	6, Hastings Street	ditto
2782	Ray, Kalidas	Sr Accountant, A G B's Office	Treasury Buildings	ditto
2783	Ray, Kshirode Gopal	Managing Director, Standard Engineering Co, Ld	103, Bow Bazar Street	ditto
2784	Ray, Kumud Bandhu, MA	Lecturer, University College	Senate House	ditto
2785	Ray, Kumud Shankar (Dr)	Director, East India Insurance Co, Ld	10, Clive Street	ditto
2786	Ray, Lalit Chandra, MA	Senior Accountant, Telegraph Check Office	33, Dalhousie Square, South	ditto
2787	Ray, M N (*Rai Bahadur*), BSc, MRAS (Lond).	Estates Manager, C I Trust	5, Clive Street	ditto
2788	Ray, M N	Assistant Secretary, Calcutta Corporation	Municipal Office	ditto
2789	Ray, Manaranjan	Proprietor, S Ray & Co	11-1, Esplanade, East	ditto
2790	Ray, Milananda, BA	Head Assistant, Finance Deptt, Bengal Secretariat	Writers' Buildings	ditto

2791	Ray, Muralidhar	Landholder	16, Banamali Sarkar Street	ditto
2792	Ray, Nihar Ranjan, MA, PRS	Lecturer, Traning College for Teachers, Calcutta Corporation.	1, Wellington square	ditto
2793	Ray, Nil Krishna	Landholder	2, Gopi Roy Lane	ditto
2794	Ray, N K, MA, BL	Officer, Hindusthan Co-operative Insurance Society, Limited	Hindusthan Buildings	ditto
2795	Ray, N N, MA	Electrical Engineer	93-3-3B, Hari Ghose Street	ditto
2796	Ray, Nripendra Krishna, MSc	Incorporated Accountant, N K Roy & Co	2, Lyons Range	ditto
2797	Ray, Parimal, MA, PhD	Principal, Govt Commercial Institute	11, Hastings Street	ditto
2798	Ray, Prafulla Kanta	Accountant, The Eastern Merchants	14, Old Court House Lane	ditto
2799	Ray, Prabhat Chandra	Executive Engineer, Damodar Divn	Treasury Buildings	ditto
2800	Ray, Pratap Chandra	Assistant Commercial Manager, E I R	E I R House	ditto
2801	Ray, Priyada Ranjan, MA	Lecturer, University College	92, Upper Circular Road	ditto
2802	Ray, Priyanath	Zamindar	102, Sovabazar Street	ditto
2803	Ray, Pulin Krishna	Landholder	7, Abhoy Charan Mitter Street	ditto
2804	Ray, Purna Chandra	Asstt Curator, Geological Survey of India	27, Chowringhee	ditto
2805	Ray, Purna Chandra, MA, BL	Secretary and Director, Hindu Mutual Life Assurance, Ld	309, Bow Bazar Street	ditto
2806	Ray, Radhika Bhusan (*Rai Bahadur*)	Director, Great India Insurance, Ld	14, Clive Street	ditto
2807	Ray, Rajendra Narayan (*Kumar*)	Zamindar	79, Upper Chitpur Road	ditto
2808	Ray, Rajes Kanta	Partner, The Eastern Merchants	14, Old Court House Lane	ditto

No.	Names.	Style or calling.	Residence or place of business.	Religion.
2809	Ray, Ramani Kanta, BA	Director, Great India Insurance, Ld	14, Clive Street	Hindu
2810	Ray, Ramani Mohan, MSc	Professor, Ripon College	24, Harrison Road	ditto
2811	Ray, Ramendra Nath	Zamindar	102, Sovabazar Street	ditto
2812	Ray, Ranajit, MA	Partner, Ray & Ray	6, Church Lane	Brahmo
2813	Ray, Sarojendra Nath, MA, PhD	Professor, City College	102-1, Amherst Street	ditto
2814	Ray, Satyananda, MA, PhD	Principal, Training College for Teachers, Calcutta Corporation	1, Wellington Square	Hindu
2815	Ray, Satyendra Nath	Head Assistant, Bengal Secretariat, Political Department	Writers' Buildings	ditto
2816	Ray, S C	Managing Director, Diana Engineering Co	31, Clive Street	ditto
2817	Ray, Shailaja Ranjan, MSc	Professor, Vidyasagar College	39, Shankar Ghose Lane	ditto
2818	Ray, Shyamendra Lal	Zamindar & Banker	53 A, Sovabazar Street	ditto
2819	Ray, S K, MEE	Director, Bengal Belting Works, Ld	14, Clive Street	ditto
2820	Ray, S K, BE, CE	Managing Director, Associated Engineers, Ld	14, Clive Street	ditto
2821	Ray, S N	Director, Diana Engineering Co	31, Clive Street	ditto
2822	Ray, Subinoy	Artist, Geological Survey of India	27, Chowringhee	Brahmo
2823	Ray, Suhas Chandra, MA	Lecturer, University College	Senate House	Hindu
2824	Ray, Sukhendra Kumar	Professor, Bangabasi College	25-1, Scott Lane	ditto

2825	Ray, Suranjana, BA	Sr Accountant, Accountant-General's Office, Bengal	Treasury Buildings	ditto
2826	Ray, Suresh Chandra	Director-in-charge (Cal Branch), The Bharat Insurance Co, Ld	Chittaranjan Avenue	ditto
2827	Ray, T K, MSc	Elec Engineer, Calcutta Corporation	Municipal Office	ditto
2828	Ray Chaudhuri, Bhupendra Narayan, MA	Director, The Guaranteed Relief Syndicate, Ld	14, Clive Street	ditto
2829	Ray Chaudhuri, B N, MISE	Accountant, Sonar Bangla Bank, Ld	137, Canning Street	ditto
2830	Ray Chaudhuri, Dwijendra Nath, MA	Professor, St Paul's Cathedral College	33-1, Amherst Street	ditto
2831	Ray Chaudhuri, I N	Secretary, Sonar Bangla Bank, Ld	137, Canning Street	ditto
2832	Ray Chaudhuri, Mahitos Kumar	Professor, Bangabasi College	25-1, Scott Lane	ditto
2833	Ray Chaudhuri, Nalini Mohan, BA	Director, Sanyal Banerjee & Co, Ld	268-B, Bow Bazar Street	ditto
2834	Ray Chaudhuri, Rabindra Nath (*Kumar*).	Landholder	9, Hungerford Street	ditto
2835	Ray Chaudhuri, Satya Prasad, DSc	Lecturer, University College	92, Upper Circular Road	ditto
2836	Ray Chaudhuri, Shachibilas	Partner, A B Patrika, Ld	2, Ananda Chatterjee Lane	ditto
2837	Ray Chaudhuri, S K, MI, MA, MIAQ, RA	Director, Sonar Bangla Bank, Ld	137, Canning Street	ditto
2838	Ray Chaudhuri, Tarak Chandra, MA	Lecturer, Calcutta University	Senate House	ditto
2839	Ray Chaudhuri, T K	Secretary and Accountant, Calcutta Improvement Trust	5, Clive Street	ditto
2840	Rudra, Harendra Krishna	Landholder	1, Brindaban Bose Lane	ditto
2841	Rudra, Manindra Nath, MSc	Lecturer, Bethune College	181, Cornwallis Street	ditto
2842	Rudra, Narendra Nath, BSc (Cal), BSc Eng'g (Benares), MAE.	Member, Association of Engineers	2, Royal Exchange Place	ditto
	S			
2843	Sadeque, Abdus, MA	Professor, Islamia College	8, Wellesley Street	Mahomedan
2844	Saha, Jagadish Ch	Partner, Messrs Adhar Ch Mahesh Ch Saha	9, Baista Set Street	Hindu

No.	Names.	Style or calling	Residence or place of business.	Religion.
2845	Saha, Jogesh Lal, BSc	Partner, Ghose & Saha	1-B, Old Post Office Street	Hindu
2846	Saha, K M	Manager, Messrs Bhajahari Brindaban Ch Saha	1, Brajagobinda Saha Lane	ditto
2847	Saha, Matilal, BE	Asstt Assessor, Calcutta Corporation	Municipal Office	ditto
2848	Saha, Ranada Prasad	General Secretary, Bengal River Service Co, Ld	9, Clive Street	ditto
2849	Saha, Surendra Nath	Sr Accountant, A G's Office, Bengal	Treasury Buildings	ditto
2850	Sahay, Baijnath, BSc	Accountant, Army Factory Accounts	6, Esplanade, East	ditto
2851	Sahgal, Sital Prosad, MA	Manager, Mahabir Insurance Co, Ld	5, Royal Exchange Place	ditto
2852	Sahu Kar, Nariman D, BA	Manager, Godrej & Boyce Mfg Co, Ld	102, Clive Street	Zoroastrian
2853	Salamatullah, S (Maulvi), BA	Lecturer, Education Department, Calcutta Corporation	Municipal Office	Mahomedan
2854	Samaddar, Bhupal Bihari	Head Assistant, Bengal Secretariat, Education Department	Writers' Buildings	Hindu
2855	Samaddar, P K, MA, BT	Manager, Art Press	20, British Indian Street	ditto
2856	Samanta, Shailaja Kinkar, BSc (Engrg), BHV	Engineer, Krupp Indian Trading Co, Ld	22, Canning Street	ditto
2857	Sanyal, Dwijendra Kumar, MA, BCom	Secretary, Indian Mining Federation	15, Clive Street	ditto
2858	Sanyal, Hariprasad, MA	Agent, Central Bank of India, Ld	10 Lindsay Street	ditto
2859	Sanyal, Hiran Kumar, MA	Asstt Editor, Bengal Co-operative Organisation Journal	3-1, Bankshall Street	Brahmo
2860	Sanyal, Jatindra Mohan	Head Assistant, Central Forms Stores	166, Dharamtala Street	Hindu
2861	Sanyal, Manindra Kumar, BSc	Assistant Accounts Officer, A-G's Office, Bengal	Treasury Buildings	ditto
2862	Sanyal, N (Dr), MA, PhD (Lond)	Superintendent (Ag), Hindusthan Co-operative Insurance Society, Ld.	Hindusthan Buildings	ditto
2863	Sanyal, Narendra Nath, BSc	Dy Superintendent, Commercial Intelligence Department	1, Council House Street	ditto

2864	Sanyal, P C	Welfare Officer, E B Ry	3, Koilaghat Street	ditto
2865	Sanyal, Pramatha Chandra, MA	Proprietor, Bengal Stores Supply Co	57, Canning Street	ditto
2866	Sanyal, S, BE	Manager, Willas Construction Co, Ld	19, Chowringhee	ditto
2867	Sanyal, S N	Head Clerk, B I S N Co, Ld	8, Strand Road	ditto
2868	Sanyal, Shachindra Narayan	Landholder	1, Rani Hemanta Kumari Street	ditto
2869	Sarbadhikari, Dhirendra Nath, BE	Building Surveyor, Calcutta Corporation	Municipal Office	ditto
2870	Sarkar, A K	Engineer & Contractor	4, Hastings Street	ditto
2871	Sarkar, Amarendra Nath, BSc	Superintendent, Oriental Seminary	336, Upper Chitpur Road	ditto
2872	Sarkar, A P	Landholder	7, Short Street	Brahmo
2873	Sarkar, Arun Kumar, MA	Asstt Superintendent, C A O's Office, E I R	E I R House	Hindu
2874	Sarkar, Balai Chand	Partner, Calcutta Supply Agency	8, Canning Street	ditto
2875	Sarkar, Bansidhar, MSc	Professor, St Xavier's College	30, Park Street	ditto
2876	Sarkar, Benoy Kumar, MA	Lecturer, University College	Senate House	ditto
2877	Sarkar, Bijali Bihari, DSc	Lecturer, University College	92, Upper Circular Road	Brahmo
2878	Sarkar, Bijaya Kumar, MA	Lecturer, University College	Senate House	Hindu
2879	Sarkar, B N	Engineer & Contractor	9, Hastings Street	ditto
2880	Sarkar, B N	Merchant	19, Strand Road	ditto
2881	Sarkar, C K	Consulting Engineer	10, Hastings Street	ditto
2882	Sarkar, D N, MA, BSc	Professor, St Paul's Cathedral College	33-1, Amherst Street	ditto

No.	Names.	Style or calling.	Residence or place of business.	Religion.
2883	Sarkar Harenda K, MA	Professor, St Xavier's College	30, Park Street	Christian
2884	Sarkar, Hemanta Kumar	Manager, New Asiatic Life Insurance Co, Ld	8, Royal Exchange Place	Hindu
2885	Sarkar, Hiran Kumar, BE	Partner, Sircar Mittra & Co	5, Nimtalla Ghat Street	ditto
2886	Sarkar, Jagadish Chandra, BE	City Architect, Calcutta Corporation	Municipal Office	ditto
2887	Sarkar, Joy Kumar	Subdivisional Officer, Canals Division, P. W. D.	Treasury Buildings	ditto
2888	Sarkar, L P	Assistant Branch Secretary, Oriental Govt Security Life Assurance Co, Ld	2, Clive Row	ditto
2889	Sarkar, Madhusudan, MA	Professor, Scottish Church College	4, Cornwallis Square	ditto
2890	Sarkar Mahendra Lal, MA	Professor, Scottish Church College	4, Cornwallis Square	Christian
2891	Sarkar, Mahendra Nath	Professor, Presidency College	86-1, College Street	Hindu
2892	Sarkar, N K	Merchant	10, Chowringhee	ditto
2893	Sarkar, N N, MA	Dy Chief Accountant, Calcutta Corporation	Municipal Office	ditto
2894	Sarkar, N R	General Manager, Hindusthan Co-operative Insurance Society, Ld	6A, Corporation Street	ditto
2895	Sarkar, P	Assistant Secretary, National Insurance Co, Ld	7, Council House Street	ditto
2896	Sarkar, Pabitra Ranjan	Officer, Hindusthan Co-operative Insurance Society, Ld	Hindusthan Buildings	ditto
2897	Sarkar, Pramatha Nath, MA	Lecturer, Bethune College	181, Cornwallis Street	ditto
2898	Sarkar, Pulin Bihari (Dr)	Lecturer, University College	92, Upper Circular Road	ditto
2899	Sarkar, Satya Prakash	Assistant Valuer, Calcutta Improvement Trust	5, Clive Street	ditto

2900	Sarkar, Shachindra Nath, MSc	Merchant and Landholder	34-1-1, Beadon Street	ditto
2901	Sarkar, Shikhi Bhusan	Manager, A T Gillespie	13, Government Place, East	ditto
2902	Sarkar, Sudhir Kumar, MA	Partner, M C Sarkar & Sons	15, College Square	ditto
2903	Sarkar, Sushil Kumar	Landholder	15-1, Issur Mill Lane	ditto
2904	Sarkar, Sushovan Chandra	Professor, Presidency College	86-1, College Street	Brahmo
2905	Saraogi, Devadutt	Merchant	63, Ezra Street	Hindu
2906	Seal, Ashutos	Landholder	38, Muktaram Babu Street	ditto
2907	Seal, Bhabani Charan, MSc	Station Engineer, All India Radio	1, Garstin Place	ditto
2908	Seal, Brindaban Chandra	Sub-Accountant, Imperial Bank of India	Strand Road	ditto
2909	Seal, Chaitanya Chand	Personal Assistant to the Chief Engineer, P H D, Bengal	3, Charnock Place	ditto
2910	Seal, Hrishikesh	Proprietor, Calcutta Hardware and Metal Supply Co	15, Clive Row	ditto
2911	Seal, Manick Lal	Partner, Calcutta Engineering Stores Co	9, Clive Row	ditto
2912	Seal, Narendra Nath	Landholder	26, Ram Mohan Saha Lane	ditto
2913	Seal, Shripati Nath	Cashier, National Bank of India, Ld	104, Clive Street	ditto
2914	Sen, A C	Director, D M Das & Sons, Ld	28, Dalhousie Square	ditto
2915	Sen, Achal Kumar	Landholder	10, Rajendra Nath Sen Lane	ditto
2916	Sen, Adi Nath, MA, BSc (Glas)	Inspector of Technical and Industrial Institutions, Bengal	40-1A, Free School Street	ditto
2917	Sen, A K	Director, D M Das & Sons, Ld	28, Dalhousie Square	ditto
2918	Sen, Aloke Kumar, MSc	Professor, Vidyasagar College	39, Shankar Ghose Lane	ditto

No.	Names.	Style or calling.	Residence or place of business.	Religion.
2919	Sen, Amiya Kumar, MA	Lecturer, University College	Senate House	Brahmo
2920	Sen, Arun Chandra, MA	Professor, Scottish Church College	4, Cornwallis Square	Hindu
2921	Sen, Bhupati Mohan	Principal, Presidency College	86-1, College Street	Brahmo
2922	Sen, Bhupati Mohan	Manager, East India Insurance Co, Ld	10, Clive Street	Hindu
2923	Sen, Bimala Kanta, BA	Superintendent, Karim Bux Bros Press	9, Anthony Bagan Lane	ditto
2924	Sen, Binaya Chandra, MA, PhD	Lecturer, University College	Senate House	ditto
2925	Sen, Bipin Bihari (*Rai Sahib*)	Cashier, Gillanders, Arbuthnot & Co	8, Clive Street	ditto
2926	Sen, B K	Assistant, Turner Morrison & Co, Ld	6, Lyons Range	Christian
2927	Sen, B N, BA, BL	Assistant, P K Ghose & Co	100, Clive Street	Hindu
2928	Sen, Debendra Nath	Professor, Presidency College	86-1, College Street	Brahmo
2929	Sen, Dhirendra Krishna	Sub-Accountant, Imperial Bank of India	3, Strand Road	Hindu
2930	Sen, Dhirendra Nath, MA, PhD	Editor, " Advance "	74, Dharamtala Street	ditto
2931	Sen, Dinesh Charan	Sr Superintendent, Reserve Bank of India	8, Council House Street	ditto
2932	Sen, G C	Managing Director, General Utilities Co	26, Strand Road	ditto
2933	Sen, Hemendra Kumar, DSc	Professor, University College	92, Upper Circular Road	ditto
2934	Sen, Indubhusan	Secretary, India Provident Co, Ld	10, Clive Row	ditto
2935	Sen, J C	Agent, Comilla Union Bank, Ld	10, Clive Street	ditto

2936	Sen, Jitendra, ASAA, RA	Accountant	5, Hastings Street (Room 3)	ditto
2937	Sen, Jitendra Mohan, BSc	Assistant Director of Public Instruction, Bengal	Writers' Buildings	Brahmo
2938	Sen, Jogesh Chandra (*Rai Bahadur*)	Landholder	5, Kumartuli Street	Hindu
2939	Sen, Jyotsna Nath	Assistant, Imperial Bank of India	3, Strand Road	ditto
2940	Sen, Kanti Chandra	Assistant, Bird & Co	1-1, Clive Street	ditto
2941	Sen, Kumud Bihari, MSc	Assistant, Bird & Co	1-1, Clive Street	ditto
2942	Sen, Manimohan, MA	Professor, Vidyasagar College	39, Shankar Ghose Lane	ditto
2943	Sen, Manimohan	Senior Accountant, C A O's Office, E I R	E I R House	ditto
2944	Sen, M N, MA, B Com	Assistant, P K Ghose & Co	100, Clive Street	ditto
2945	Sen, N	Secretary, D M Dass & Sons	28, Dalhousie Square	ditto
2946	Sen, Nagendra Nath, AMAE	Member, Association of Engineers	2, Royal Exchange Place	ditto
2947	Sen, Nikhil Ranjan, DSc, PhD	Professor, University College	92, Upper Circular Road	ditto
2948	Sen, Nirmallya Chander, BA	Assistant, Longmans, Green & Co, Ld	6, Old Court House Street	ditto
2949	Sen, Nripendra Nath, DSc	Lecturer, University College	92, Upper Circular Road	ditto
2950	Sen, N R, BA	Assistant, P K Ghose & Co	100, Clive Street	ditto
2951	Sen, Paresh Nath	Elecl Asstt Engineer, Western Electrical Dn, P W D	Writers' Buildings	ditto
2952	Sen, Pramode Chandra	Professor, Bangabasi College	25-1, Scott Lane	ditto
2953	Sen, Pravash Kumar	Staff Assistant, Imperial Bank of India	3, Strand Road	ditto
2954	Sen, Priya Ranjan, MA	Lecturer, University College	Senate House	Brahmo
2955	Sen, Rabindra Nath	Partner, N L Roy & Co	7, Lyons Range	Hindu
2956	Sen, Rabindra Nath, MA, PhD	Lecturer, Calcutta University	Senate House	ditto
2957	Sen, Ramendra Kumar	Accountant, office of the Controller of Army Factory Accounts.	6, Esplanade, East	ditto

No.	Names.	Style or calling.	Residence or place of business.	Religion.
2958	Sen, Ramesh Chandra	Assistant, Martin & Co	12, Mission Row	Hindu
2959	Sen, Satish Chandra, MA, BL	Professor, City College	102-1, Amherst Street	ditto
2960	Sen, Satish Chandra, MA, BL	Vice-Principal, Vidyasagar College	39, Sankar Ghose Lane	ditto
2961	Sen, Satyendra Nath, MA	Professor, City College	102-1, Amherst Street	ditto
2962	Sen, S C	Superintendent of Agents, Scottish Union and National Insurance Co.	6, Lyons Range	ditto
2963	Sen, Shachindra Nath	Manager, East Bengal River Steam Service, Ld	87, Sovabazar Street	ditto
2964	Sen, S K, ASAA, BA	Accountant	4, Hastings Street	ditto
2965	Sen, S K, BA	Partner, Sen & Pandit	Mercantile Buildings	ditto
2966	Sen, S N	Accounts Officer, Metropolitan Insurance Co, Ld	28, Pollock Street	ditto
2967	Sen, S R, MA	Assistant, P K Sen & Co	100, Clive Street	ditto
2968	Sen, Satya Sadhan	Offg Accountant, D A-G, P & T Office	7, Koilaghat Street	ditto
2969	Sen, Sukumar, MA	Lecturer, Calcutta University	Senate House	ditto
2970	Sen, Sunil Chandra	Demonstrator, Presidency College	86-1, College Street	ditto
2971	Sen, Surendra Kumar, BL	Director, Bengal Central Bank, Ld	86, Clive Street	ditto
2972	Sen, Surendra Nath	Chief Clerk, Office of the Chief Mining Engineer, Railway Board	1, Council House Street	ditto
2973	Sen, Tarak Nath	Professor, Presidency College	86-1, College Street	ditto
2974	Sen, Tulsi Charan	Accountant, D A-G, P & T Office	7, Koilaghat Street	ditto
2975	Sen Gupta, Birendra Kumar, MA	Inspector of Schools, Education Department	Municipal Office	ditto
2976	Sen Gupta, Bhupati Bhusan	Dy Assistant Valuer, Calcutta Improvement Trust	5, Clive Street	ditto
2977	Sen Gupta, H L, MA	Managing Director, Union Bank of Bengal, Ld	5, Clive Row	ditto
2978	Sen Gupta, Indu Bhusan, MA, BL	Professor, Vidyasagar College	39, Shankar Ghose Lane	ditto

2979	Sen Gupta, Jatish Ch	Professor, Presidency College	86-1, College Street	ditto
2980	Sen Gupta, Kiran Chandra	Manager, Jail Depot	Writers' Buildings	ditto
2981	Sen Gupta, Kriparam	Senior Accountant, A G's Office, Bengal	Treasury Buildings	ditto
2982	Sen Gupta, Lalit Kumar	Assistant, Martin & Co	12, Mission Row	ditto
2983	Sen Gupta, Monmohan, BE, SB (*Rai Sahib*)	P A to Chief Engineer, P W D	Writers' Buildings	ditto
2984	Sen Gupta, R M	Manager, *Advance*	74, Dharamtala Street	ditto
2985	Sen Gupta, Saroj Kumar	Manager, Calcutta Insurance, Ld	86, Clive Street	ditto
2986	Sen Gupta, Subodh Ch	Professor, Presidency College	86-1, College Street	ditto
2987	Sen Gupta, Tara Prasanna	Dy Assistant Valuer, Calcutta Improvement Trust	5, Clive Street	ditto
2988	Seraogi, Baijnath, BA	Merchant	13, Saha Lane	Jain
2989	Seth, Bhupatra M, BA	Partner, Ramdev Chokhany	7, Lyons Range	Hindu
2990	Seth, G B, BA, FRHS (Lond)	Proprietor, Ivy Nursery and Seed Store	93-5, Hurry Ghose Street	ditto
2991	Seth, Gostha Bihari	Zamindar	59, Banstola Street	ditto
2992	Seth, Nalini Kanta	Landholder	347, Upper Chitpur Road	ditto
2993	Seth, Phanindra Chandra	Manager, Lily Biscuit Co	3, Ramakanta Sen Lane	ditto

No.	Names	Style or calling.	Residence or place of business.	Religion.
2994	Sethi, Jagat Ram, MSC	Chief Chemist, Imperial Chemical Industries Laboratory	18, Strand Road	Hindu
2995	Shafi, Mahomed Iqbal	Assistant, Mackinnon Mackenzie & Co	16, Strand Road	Mahomedan
2996	Shah, Ranada Prasad	General Secretary, Bengal River Service Co, Ld	9, Clive Street	Hindu
2997	Shaik, Sharafuddin, MA	Professor, Islamia College	8, Wellesley Street	Mahomedan
2998	Shariff, Md S N, BA	Sub-Assessor, Calcutta Corporation	Municipal Office	ditto
2999	Sharma, Kedar Nath, BSC	Asstt Engineer, Indian Stores Department (Inspution)	6, Esplanade, East	Hindu
3000	Sharma, P H	Asstt Traffic Supdt, Traffic Deptt, E B R	3, Koilaghat Street	ditto
3001	Sharma, Rajendra Nath, BSc (Cal)	Assistant Engineer, Indian Stores Department (Inspection)	6, Esplanade East	ditto
3002	Shastri, Ashutos, MA, PhD	Lecturer, Calcutta University	Senate House	ditto
3003	Shastri, Dakshina Ranjan (Pandit), MA	Lecturer, Sanskrit College	College Square	ditto
3004	Shastri, Prabhudutt	Professor, Presidency College	86-1, College Street	ditto
3005	Shroff, Babulal	Honorary Secretary, Marwari Association	134, Mechuabazar Street	ditto
3006	Sikdar, Indu Bhusan	Passing Officer, Imperial Bank of India	Strand Road	ditto
3007	Singh, Inder	Asstt Accounts Officer, E B R	3, Koilaghat Street	ditto
3008	Singh, Raghubir	Testing Officer, W W, Calcutta Corporation	Municipal Office	ditto
3009	Singh, Ram	Auditor, C A's Office, E I R	E I R House	ditto
3010	Singhania, Balabux	Partner, Deva Dutt Saraogi & Son	63, Ezra Street	ditto
3011	Sinha, Amulya Ratan, MA	Superintendent, Commercial Intelligence Department	1, Council House Street	ditto
3012	Sinha, Ananda Krishna, MA	Professor, Ripon College	24. Harrison Road	ditto

3013	Sinha, Bibhas Chandra	Landholder	145-1, Baranasi Ghose Street	ditto
3014	Sinha, Chaturbhuj Prosad	Head Clerk & Accountant, C E's Office, E I R	E I R House	ditto
3015	Sinha, Harish Chandra, MA, PhD	Lecturer, University College	Senate House	ditto
3016	Sinha, Jogesh Chandra	Professor, Presidency College	86-1, College Street	ditto
3017	Sinha, K, BA	Revenue Officer, Calcutta Corporation	Sir Stuart Hogg Market	ditto
3018	Sinha, Krishna Prasanna	Partner, A B Patrika, Ld	2, Ananda Chatterjee Lane	ditto
3019	Sinha, Mohar Lal	Merchant	D-11, Jagannath Ghat Road	ditto
3020	Sinha, Mohindra, BA	Professor, St Xavier's College	30, Park Street	ditto
3021	Sinha, Narendra Krishna, MA, PhD	Lecturer, Calcutta University	Senate House	ditto
3022	Sinha, Prafulla Kumar, MSc	Accountant, D A-G P & T Office	7, Koilaghat Street	ditto
3023	Sinha, Purna Chandra	Landholder	147, Baranasi Ghose Street	ditto
3024	Sinha, Radha Raman, BE	Chief Valuer and Surveyor, Calcutta Corporation	Municipal Office	ditto
3025	Sinha, R M	Dy Chief Engineer, Signal, C E's Office, E I R	E I R House	ditto
3026	Sinha, R N	Assistant, Andrew Yule & Co, Ld	8, Clive Row	ditto
3027	Sinha, S C	Secretary, Diana Engineering Co	31, Clive Street	ditto
3028	Som, Kshirod Ch	Manager, Nagarbasi, Chittaranjan Niharranjan Saradaranjan Modak.	87/2, College Street	ditto
3029	Srikanteswaran, K V	Accounts Officer, C A O s Office, E I R	E I R House	ditto
3030	Srinivasan, C M, BL	Secretary, Indian Mutual Life Association, Ld	8-2, Hastings Street	ditto

No.	Names.	Style or calling.	Residence or place of business.	Religion.
3031	Subarwal, B L	Superintending Engineer, Southern Circle, Irrigation Deptt	Writers' Buildings	Hindu
3032	Subnis, Jivaji Dattatray	Manager, George Newnes Book Co (India), Ld	10, Clive Row	ditto
3033	Subrahmanyan, S I, BA	Accountant, D A-G P & T Office	7, Koilaghat Street	ditto
3034	Subrahmanyan, T V, MA	Sr Accountant, A G's Office, Bengal	Treasury Buildings	ditto
3035	Subramania, L B	Accountant, D A-G P & T Office	7, Koilaghat Street	ditto
3036	Subramanian, Venkata Subbier (*Rao Sahib*), BA	P A to Controller of Inspection, Indian Stores Deptt	6, Esplanade, East	ditto
3037	Sudderuddin, K, BA	Resident	36, Theatre Road	Mahomedan
3038	Sundaram, Chokkanadhapuram Annaswamy	Manager, Down Bros, Ld	21, Old Court House Street	Hindu
3039	Sundaram, P S, BA	Accountant, D A G P & T Office	7, Koilaghat Street	ditto
3040	Sur, A K, MA, FRES (Lond)	Associate Editor, Commercial Gazette	2, Royal Exchange Place	ditto
3041	Sur, Bishnudas, MCom	Audit Inspector, Calcutta Corporation	Municipal Office	ditto

T

3042	Tagore, Alakendra Nath	Landholder	5, Dwarkanath Tagore Lane	Hindu
3043	Tagore, Bratindra Nath	Landholder	5, Dwarkanath Tagore Lane	ditto
3044	Tagore, Kanakendra Nath	Landholder	5, Dwarkanath Tagore Lane	ditto
3045	Tagore, Kshemendra Mohan	Landholder	27, Park Lane	ditto
3046	Tagore, Nabendra Nath	Landholder	5, Dwarkanath Tagore Lane	ditto
3047	Tagore, Ranendra Mohan	Landholder	11, Pathuriaghatta Street	ditto
3048	Tagore, Rathindra Nath	Landholder	6, Dwarkanath Tagore Lane	Brahmo
3049	Tandon, Lachmi Narain	Accountant, Allahabad Bank, Ld	6, Royal Exchange Place	Hindu
3050	Tapuriah, Moongtu Lall (*Rai Bahadur*)	Merchant	42-1, Strand Road	ditto
3051	Tarmaster, Magaldas Luxmidas, FSAA.	Proprietor, Tarmaster & Co	6, Old Post Office Street	ditto
3052	Thakur, Amareswar, MA, PhD	Lecturer, University College	Senate House	ditto
3053	Thapar, Karam Chand	Managing Director, Karamchand Thapar & Bros, Ld	5, Royal Exchange Place	ditto
3054	Todi, Premsukhdass	Broker	2, Royal Exchange Place	ditto
3055	Topader, Kshirode Nath	Passing Officer, Imperial Bank of India	8, Clive Street	ditto
3056	Trivedi, P MA	Assessor, Calcutta Corporation	Municipal Office	ditto
3057	Trivedi, Ramchandra Durlabhji	Chief Accountant, Jeewanlal (1929), Ld	101, Clive Street	ditto

V

3058	Vidyabhusan, Manmatha Nath MA,	Professor, St Xavier's College	30, Park Street	Hindu
3059	Vidyanathan, A, BL, ACII (Lond)	Officer, Hindusthan Co-operative Insurance Society, Ld	Hindusthan Buildings	ditto
3060	Vaish, Radha Krishna	Examiner of Patents	1, Council House Street	ditto

No.	Names.	Style or calling.	Residence or place of business.	Religion.
3061	Velji, H, FSDS (Eng)	Managing Proprietor, Laurel Typewriter Co	4-6A, Waterloo Street	Hindu
3062	Venkateswaran, Subbiah, DSc	Examiner of Patents	1, Council House Street	ditto
3063	Venugopal, C T, MSc	Accounts Officer, E B R	3, Kaylaghat Street	Christian
3064	Verma, B B	Executive Engineer, E I R	E I R House	Hindu
3065	Viccaji, V F	Incorporated Accountant, S R Batliboi & Co	1-B, Old Post Office Street	Zoroastrian
3066	Vyas, G M	Partner, G M Vyas	71, Clive Street	Hindu
	W			
3067	Wadhera, Sagar Chand	Manager, Karam Chand Thapar & Bros, Ld	5, Royal Exchange Place	Hindu
3068	Waziruddin	Assistant, Karnani Industrial Bank	3, Synagogue Street	Mahomedan
	Y			
3069	Yusuf, Maulvi Mahomed, MA, MRAS (*Khan Bahadur*).	Head Master, Calcutta Madrassa	19, Wellesley Square	Mahomedan

O. MOSES,
Clerk of the Crown.

Registered No. C207

No. 17 of 1937

The Calcutta Gazette

THURSDAY, APRIL 29, 1937.

CONTENTS:

	Page.
Statement under the Cotton Ginning and Pressing Factories Act, 1925 ..	465
Annual Accounts of the Calcutta Improvement Trust for the year ended 31st March 1936	466—501
Statements of weekly gauge readings on certain rivers in Bengal	502—504
Weather and Crop Report for the week ending the 21st April 1937 ..	505—508
Prices-current (wholesale and retail) of Food-grains, Salt, etc., in the districts of Bengal for the first half of April 1937 ..	509—512
Vital Statistics of towns of Bengal for the week ending 17th April 1937 ..	513
Abstract statement showing the approximate volume of traffic and the tollage on canals in Bengal classed as Major and Minor Works and Navigation for the month of February 1937	514
Corporation of Calcutta Notice ..	515—516
Statement showing the accounts of the Sinking Funds of the Corporation of Calcutta for the year 1935-36 ..	517
Daily Rainfall recorded in Bengal for the month of March 1937	518—533
Area leased for irrigation up to end of February 1937	534

SUPPLEMENT.

Official Papers.

FORM C—BENGAL.

STATEMENT OF COTTON PRESSED IN THE BENGAL PRESIDENCY FOR THE WEEK ENDING THE 16th APRIL 1937.

[Section 5(2) of the Cotton Ginning and Pressing Factories Act, 1925.]

Name of Division or block.	Number of bales pressed.				District included in the block.
	During the week.	During the corresponding week last year.	Since 1st September 1936 (the date prescribed by the Local Government as the commencement of the season).	During the corresponding period last year.	
The Bengal Presidency	2,072 or 2,057·12 bales of 400 lbs. each.	2,773	28,277	34,005	All districts in the Presidency.

C. S. STEEL,

Chief Inspector of Factories, Bengal (offg.).

CALCUTTA IMPROVEMENT TRUST.

NOTICE.

Calcutta, the 18th March 1937.

The Accounts of the Calcutta Improvement Trust for the year 1935-36 having been audited by an Auditor appointed by the Government, the following Abstract of Accounts is published in accordance with the provisions of section 136 of Bengal Act V of 1911.

C. W. GURNER,

Chairman, Calcutta Improvement Trust.

CHAIRMAN,

Annual Accounts for the year ended 31st March, 1936.

I beg to submit the accounts for the year ended 31st March, 1936.

CAPITAL ACCOUNT.

Receipts.—The receipts for the year amounted to Rs. 15·27 lakhs in excess of the budget estimates excluding the 3½ per cent. Debenture Loan of Rs. 35 lakhs, which was floated during the period. The actuals and the estimates of the different sources of receipts compare as follows:—

	Budget.	Actuals.	Difference.
	Rs. in lakhs.	Rs. in lakhs.	Rs. in lakhs.
Fees under section 78 ..	1·00	3·20	+2·20
Sale of land	30·00	42·68	+12·68
Sale of buildings ..	0·75	1·87	+1·12
Sale of old materials, etc.	0·01	0·03	+0·02
Contribution for Engineering works (Corporation)	1·00	..	−1·00
Contribution for bridges (Corporation) ..	3·00	3·50	+0·50
Contribution for bridges (Government) ..	0·65	0·40	−0·25
Total (in lakhs) ..	36·41	51·68	+15·27

Expenditure.—The total expenditure for the year was Rs. 84·64 lakhs against the provision of Rs. 78·16 lakhs. The excess of expenditure of Rs. 6·48 lakhs over the estimate is accounted for as follows:—

	Budget.	Actuals.	Difference.
	Rs. in lakhs.	Rs. in lakhs.	Rs. in lakhs.
Cost of land	65·00	72·98	+7·98
Engineering works (including stores)	10·61	10·64	+0·03
Other charges	2·55	1·02*	−1·53
Total (in lakhs) ..	78·16	84·64	+6·48

Saleable assets of the Trust.—The saleable assets of the Trust do not appear from the Statement of Accounts which shows total expenditure on the Capital side. The greater part of the land in the possession of the Trust at any time cannot be regarded as saleable assets, as it is intended ultimately for transfer to the Calcutta Corporation in the shape of streets or open spaces. The figure for expenditure under Tools and Plant in the Capital Account show total expenditure without depreciation. The assets of the Trust as at 31st March 1936 have been valued and are estimated as follows:—

	Rs. in lakhs.
Surplus land	187·73
Rehousing scheme	10·60
Excavation area	11·00
Entally store yard	1·25
Mortgages, rent charges, etc.	76·14
Reversionary value of leases	1·66
Total of assets on land ..	288·38
Stores, Plant and Tools.	
Stores	1·67
Plant and tools	1·40
Grand Total (in lakhs) ..	291·45

Loans.—The Balance Sheet on page 3 includes statement of loans raised, and a statement of the position of the Sinking Funds for the repayment of the loans at 31st March

* Includes a credit of Rs. 0·93 lakhs on account of Tools and Plant by readjustment with Supply of Stores account.

1936, is on page 36. The total amount of Sterling loans raised to date is £1,050,000 as against which securities in the Sinking Fund Accounts amount at present valuation to £418,557, showing an excess of £113,986 over actuarial dues. The total of rupee loans raised amounts to Rs. 160 lakhs as against which securities in the Sinking Fund Accounts amount at present valuation to Rs. 19,06,199 showing an excess of Rs. 3,26,962 over the sum actuarially due

Contingent liability.—No liability is shown in the Balance Sheet for contribution to the Trust Provident Fund which may be deemed to equal the Provident Fund Depositors' Accounts standing at Rs. 7·32 lakhs. This with gratuity money payable to the staff under the required conditions is the only contingent liability of the Trust

Capital deficit.—The closing deficit on Capital Account which it was estimated would amount to Rs. 486·42 stood at Rs. 475·28 lakhs arrived as follows:—

	Estimated.	Actuals.
	Rs. in lakhs.	Rs. in lakhs.
Opening deficit at 31st March 1934	479·67	477·33
Receipts during the year ..	71·41*	86·69*
	408·26	390·64
Expenditure during the year ..	78·16	84·64
Total (in lakhs) ..	486·42	475·28

REVENUE ACCOUNT.

Receipts.—The total receipts for the year (excluding the appreciation on securities, Rs. 2·42 lakhs) were Rs. 47·90 lakhs as against a budget estimate of Rs. 45·97 lakhs showing an increase of Rs. 1·93 lakhs only. This was principally due to duty on jute, which amounted to Rs. 11·37 lakhs as against the estimate of Rs. 9·50 lakhs.

Expenditure.—The expenditure for the year (excluding the discount on Rs. 35 lakhs Debenture Loan, Rs. 1,68 lakhs) was Rs. 33·43 lakhs against a budget provision of Rs. 36·19 lakhs. The shortage of expenditure of Rs. 2·76 lakhs below the estimate is accounted for by savings in the various heads of expenditure, the principal items being:—

	Rs. in lakhs.
Interest on loans against securities (Item A. 7)	·22
Rates and taxes (Item B. 1)	·35
Establishment (Item D)	1.27
Cost of Tribunal (Item F)	·10
Office expenses (Items G. and I.) ..	·27
Expenses of Management of Property (Item J.)	·10

Closing balance.—The closing balance at credit of Revenue Account is Rs. 528·12 lakhs of which a sum of Rs. 475 28 lakhs has been advanced to Capital Account to meet payments in excess of Capital Receipts. The nett balances of Rs. 52·84 lakhs was held as follows:—

		Rs. in lakhs.
G. P. notes and other securities		37·36
Cash in hand		0·07
Current account with Imperial Bank ..		2·05
		39·48
On fixed deposits and at call		20·00
Total (in lakhs) ..		59·48
Deduct—	Rs. in lakhs.	
Moneys held by Trust ..	10·47	
Less advances	3·83	6·64
Total (in lakhs) ..		52·84

T. K. ROY CHAUDHURY,
Chief Accountant.

Calcutta, 10th August 1936.

*Including Rs. 35 lakhs loan.

Balance sheet as at 31st March 1936.

Liabilities.	Rs. a. p.	Rs. a. p.
Deposits of contractors—		
On contract	9,596 0 0	
On tender	19,590 0 0	
Retention money ..	52,278 9 3	
		81,464 9 3
Sundry creditors ..	....	2,08,176 8 9
Provident Fund Depositors' Account . ..	7,32,109 5 5	
Provident Fund Depositors' Account (Tribunal) .	25,165 15 8	
		7,57,275 5 1
Surplus on Revenue Account	....	5,28,12,287 7 7
Total ..		5,38,59,203 14 8
6 per cent. Debenture Loan of 1922 for £350,000		*52,50,000 0 0
5½ per cent Debenture Loan of 1923 for £700,000		*1,05,00,000 0 0
6 per cent Debenture Loan of 1925 for Rs. 50 lakhs		50,00,000 0 0
5½ per cent. Debenture Loan of 1929 for Rs. 25 lakhs		25,00,000 0 0
4 per cent. Debenture Loan of 1934 for Rs 50 lakhs		50,00,000 0 0
3½ per cent. Debenture Loan of 1935 for Rs. 35 lakhs		35,00,000 0 0
Total ..		3,17,50,000 0 0
Grand Total ..		8,56,09,203 14 8

Assets.	Rs a p.	Rs a. p.
Securities—		
3½ per cent. Government Promissory Notes ..	29,60,800 0 0	28,78,850 0 0
4 per cent. Calcutta Port Trust Debentures ..	3,75,600 0 0	3,87,334 4 0
4 per cent. Calcutta Municipal Debentures .	434,700 0 0	4,47,833 3 0
5 per cent. War Loan of 1945-55	1,400 0 0	1,668 0 0
5 per cent. Loan of 1939-44	18,700 0 0	20,243 0 0
	38,00,200 0 0	37,35,928 7 0
On fixed deposit and at call	..	20,00,000 0 0
Sundry advances ..	..	3,83,156 10 5
Cash in hand	6,375 9 3	
Cash in transit	829 8 0	
On Current Account with Imperial Bank of India ..	2,04,763 14 8	
		2,11,968 15 11
Advance from Revenue for Capital Expenditure		4,75,28,149 13 4
Total ..		5,38,59,203 14 8
Proportion of total loans expended on Capital Works to 31st March 1936		3,17,50,000 0 0
Total ..		3,17,50,000 0 0
Grand Total ..		8,56,09,203 14 8

*Rupee figures represent conversion at 1s. 4 d on which basis the loans were brought into the accounts when raised. At exchange of 1s. 0d the liability for the Sterling loans amounts to Rs. 46-2/3 and 93-1/3 lakhs, respectively.

Annual Accounts, 1935-36.

Note.—Surplus on Revenue Account Rs. 5,28,12,287-7-7 appearing in the Balance Sheet of the accounts includes Rs. 19 creditable to Sundry Advances Account

T. K. ROY CHAUDHURI,
Chief Accountant.

C. V. HINGSTON,
Chairman (offg.).

ACCOUNTS, 1935-36.

Capital Account—Statement of Income and Expenditure.

Income.

Receipts.	Budget for 1935-36.	Actuals for 1935-36	Actuals to 31st March 1935.	Actuals to 31st March 1936.
	Rs.	Rs. a. p.	Rs. a. p.	Rs a. p.
A. Under section 122 (a)—				
Receipts under section 78—				
Scheme No.—				
I*		.	82,768 13 9	82,768 13 9
I Alt.		..	24,100 0 0	24,100 0 0
IA		..	1,15,500 0 0	1,15,500 0 0
IB		..	13,747 0 0	13,747 0 0
IC		..	1,28,999 13 2	1,28,999 13 2
II		..	32,129 0 0	32,129 0 0
IIA		.	580 0 0	580 0 0
III		..	29,087 0 0	29,087 0 0
IV		6,481 10 8	93,981 3 6	1,00,462 14 2
IVA		..	2,95,228 12 0	2,95,228 12 0
V		27,197 0 0	3,49,470 0 6	3,76,667 0 6
VII		600 0 0	8,48,578 6 8	8,49,178 6 8
VIIA		..	2,49,760 0 0	2,49,760 0 0
VIIB		..	1,53,184 0 0	1,53,184 0 0
VIIC		2,000 0 0	4,19,641 15 8	4,21,641 15 8
VIID		.	42,935 0 0	42,935 0 0
VIIE			88,670 0 0	88,670 0 0
VIIF		..	44,270 0 0	44,270 0 0
VIICS		..	2,09,346 14 0	2,09,346 14 0
VIIG		..	4,56,893 13 4	4,56,893 13 4
VIIH		..	84,874 8 1	84,874 8 1
VIIJ		.	19,586 0 0	19,586 0 0
VIII		..	1,45,154 2 0	1,45,154 2 0
VIIIA		2,000 0 0	1,63,011 8 8	1,65,011 8 8
VIIIC		..	17,169 15 0	17,169 15 0
XI		..	38,850 0 0	38,850 0 0
XII		..	2,12,415 9 4	2,12,415 9 4
XIIA	1,00,000	..	1,10,875 1 1	1,10,875 1 1
XIII		..	39,091 10 8	39,091 10 8
XVA		..	9,395 0 0	9,395 0 0
XVB		3,318 0 0	27,488 5 4	30,806 5 4
XVC		..	39,460 0 0	39,460 0 0
XVD		..	8,855 0 0	8,855 0 0
XVI		..	38,856 0 0	38,856 0 0
XVIA		..	20 0 0	20 0 0
XVII		..	40 0 0	40 0 0
XIX		..	48,400 0 0	48,400 0 0
XX		..	40 0 0	40 0 0
XXII		..	1,03,695 0 0	1,03,695 0 0
XXV		..	20 0 0	20 0 0
XXVI			58,050 0 0	58,050 0 0
XXVII		10 0 0	8,620 0 0	8,630 0 0
XXIX		..	520 0 0	520 0 0
XXXI		..	48,445 0 0	48,445 0 0
XXXII		.	17,500 0 0	17,500 0 0
XXXIII		362 0 0	18,352 0 0	18,714 0 0
XXXIV		..	32,910 0 0	32,910 0 0
XXXVII		52,097 8 0	16,280 8 0	68,378 0 0
XXXVIII		79,940 0 0	15,400 0 0	95,340 0 0
IM		61,500 0 0	28,892 8 0	90,392 8 0
IIM		.	3,635 0 0	3,635 0 0
IIIM		28,408 0 0	10 0 0	28,418 0 0
XLII		16,000 0 0	..	16,000 0 0
XLIII		40,000 0 0	..	40,000 0 0
Rehousing Scheme No. I		.	500 0 0	500 0 0
	1,00,000	3,19,914 2 8	50,35,284 8 9	53,55,198 11 5
B. Under section 122 (c).				
Sale of land.				
Scheme No.—				
I	..	53,045 2 4	43,08,769 5 4	43,61,814 7 8
I Alt	..	38,950 0 0	5,54,035 0 0	5,92,985 0 0
IA	..	....	1,20,360 0 0	1,20,360 0 0
IB	..	. .	3,53,948 8 7	3,53,948 8 7
Carried over		91,995 2 4	53,37,112 13 11	54,29,108 0 3
Carried over	1,00,000	3,19,914 2 8	50,35,284 8 9	53,55,198 11 5

*For nomenclature of the Schemes see Schemes in Capital Expenditure.

Capital Account—(Income)—*continued.*

Receipts	Budget for 1935-36.	Actuals for 1935-36.	Actuals to 31st March 1935.	Actuals to 31st March 1936.
	Rs.	Rs. a. p.	Rs. a p.	Rs a. p.
Brought forward ..	1,00,000	3,19,914 2 8	50,35,284 8 9	53,55,108 11 5
B. Under section 122(c)—contd.				
Sale of land—*contd.*				
Brought forward ..		91,995 2 4	53,37,112 13 11	54,29,108 0 3
Scheme No.—				
IC	..	8,250 0 0	5,66,745 15 6	5,74,995 15 6
II	..	....	19,82,552 11 6	19,82,552 11 6
IIA	..	....	1,13,581 14 10	1,13,581 14 10
III	..	....	2,04,466 13 5	2,04,466 13 5
IV	..	6,610 0 0	21,90,348 5 11	21,96,958 5 11
IVA	..	65,416 0 0	42,39,480 3 4	43,04,896 3 4
V	..	36,892 1 5	31,31,912 10 3	31,68,804 11 8
VIICS	..	....	15,38,963 4 9	15,38,963 4 9
VII	..	....	33,69,190 1 0	33,69,190 1 0
VIIA	..	....	17,15,245 0 9	17,15,245 0 9
VIIB	..	30,134 0 0	21,48,494 4 2	21,78,628 4 2
VIIC	..	1,05,181 0 0	27,38,790 2 7	28,43,971 2 7
VIID	2,00,000	1,07,405 0 0	19,25,031 13 9	20,32,436 13 9
VIIE	3,50,000	1,29,538 0 0	60,01,673 5 11	61,31,211 5 11
VIIF	50,000	12,317 8 0	10,36,567 14 0	10,48,885 6 0
VIIG	1,00,000	1,28,807 0 0	19,51,430 5 3	20,80,237 5 3
VIIH	2,50,000	4,49,171 4 0	7,11,789 13 9	11,60,961 1 9
VIIJ	2,00,000	1,28,236 12 0	5,80,979 4 0	7,09,216 0 0
VIII	50,000	93,490 8 0	21,60,494 1 6	22,53,984 9 6
VIIIA	50,000	84,132 9 6	12,46,340 9 9	13,30,473 3 3
VIIIC	1,00,000	1,42,463 9 3	12,74,164 8 0	14,16,628 1 3
IX	..	....	2,53,093 0 0	2,53,093 0 0
XI	..	1,875 0 0	3,05,048 8 0	3,06,923 8 0
XII	..	....	1,21,121 0 0	1,21,121 0 0
XIII	..	....	18,051 7 2	18,051 7 2
XVA	25,000	36,210 1 0	4,69,022 0 5	5,05,232 4 5
XVB	2,50,000	6,67 770 15 0	48,01,769 14 2	54,69,540 13 2
XVC	75,000	2,27,537 4 0	6,13,419 14 0	8,40,957 2 0
XVD	50,000	70,038 7 3	5,69,122 3 8	6,39,160 10 11
XVI	75,000	23,893 10 8	8,53,089 6 3	8,76,983 0 11
XVIA	25,000	6,162 0 0	1,78,889 0 0	1,85,051 0 0
XVII	..	....	2,89,557 0 0	2,89,557 0 0
XX	25,000	15,823 0 0	3,34,392 12 3	3,50,215 12 3
XXII	50,000	1,01,457 8 0	2,42,622 8 0	3,44,080 0 0
XXV	..	....	21,700 0 0	21,700 0 0
XXVI	2,25,000	91,254 0 0	4,35,616 3 1	5,26,870 3 1
XXVII	2,00,000	7,963 0 0	8,77,165 7 5	8,85,128 7 5
XXIX	..	5,350 0 0	1,30,103 0 0	1,35,453 0 0
XXXI	..	....	3,26,302 14 6	3,26,302 14 6
XXXIII	3,00,000	9,02,208 11 3	71,837 5 4	9,74,046 0 7
XXXVII	1,00,000	93,584 0 0	81,574 0 0	1,75,158 0 0
XXXVIII	1,00,000	2,00,547 0 0	12,525 0 0	2,13,072 0 0
Cossipore-Chitpore (Open Space) ..	..	14,851 0 0	1,78,608 0 0	1,93,459 0 0
Rehousing at Bow street	..	....	17,250 0 0	17,250 0 0
Rehousing M B. S No. I	..	....	550 0 0	550 0 0
Scheme No. XLII	..	17,000 0 0	....	17,000 0 0
Rehousing at Kerbala Tank Lane ..	..	9,111 0 0	3,96,652 0 0	4,05,763 0 0
Rehousing at Paikpara	..	17,733 1 0	1,59,457 7 2	1,77,190 8 2
Maniktala Scheme No. I	50,000	71,742 13 6	1,79,511 12 0	2,51,254 9 6
Maniktala Scheme No. II	1,00,000	46,582 8 0	10,555 8 0	57,138 0 0
Maniktala Scheme No. III	..	19,638 0 0	59,560 0 0	79,198 0 0
Alignment No. X	..	....	90,000 0 0	90,000 0 0
Bustee Rehousing—Christopher Road ..	..	....	272 0 0	272 0 0
Total ..	30,00,000	42,68,373 9 2	5,82,63,795 5 3	6,25,32,168 14 5
Sale-proceeds of buildings.				
Scheme No.—				
I		....	1,96,930 2 0	1,96,930 2 0
I Alt.		....	32,120 0 0	32,120 0 0
IA		....	1,450 0 0	1,450 0 0
IAAlt.		....	13,250 0 0	13,250 0 0
IB		....	26,035 0 0	26,035 0 0
IC		....	56,347 0 0	56,347 0 0
II		....	62,662 0 0	62,662 0 0
IIA		....	2,997 0 0	2,997 0 0
III		....	3,516 0 0	3,516 0 0
IV		....	1,07,500 0 0	1,07,500 0 0
IVA		....	1,39,950 1 0	1,39,950 1 0
V		....	1,72,779 2 8	1,72,779 2 8
VAlt.		....	50 0 0	50 0 0
VII		....	4,32,608 6 0	4,32,608 6 0
			12,48,194 11 8	12,48,194 11 8
Carried over ..	31,00,000	45,88,287 11 10	6,32,99,079 14 0	6,78,87,367 9 10

Capital Account—(Income)—*continued.*

Receipts.	Budget for 1935-36.	Actuals for 1935-36.	Actuals to 31st March 1935.	Actuals to 31st March 1936.
	Rs.	Rs. a. p.	Rs. a. p.	Rs. a. p.
Brought forward ..	31,00,000	45,88,287 11 10	6,32,99,079 14 0	6,78,87,367 9 10
B. Under section 122 (c)—contd.				
Sale-proceeds of buildings—contd.				
Brought forward ..			12,48,194 11 8	12,48,194 11 8
Scheme No.—				
VIIA		....	79,314 0 0	79,314 0 0
VIIB		....	1,69,998 6 0	1,69,998 6 0
VIIC		....	2,98,886 0 0	2,98,886 0 0
VIID		....	1,76,050 0 0	1,76,050 0 0
VIIE		....	4,93,799 2 0	4,93,799 2 0
VIIF		....	98,923 12 9	98,923 12 9
VIIG		....	1,66,995 0 0	1,66,995 0 0
VIIH		4,325 0 0	1,47,101 0 0	1,51,426 0 0
VIIJ		....	89,683 0 0	89,683 0 0
VIICS		....	77,373 9 9	77,373 9 9
VIII		....	1,52,940 11 6	1,52,940 11 6
VIIIA		1,200 0 0	1,00,851 8 0	1,02,051 8 0
VIIIC		....	78,220 0 0	78,220 0 0
IX		....	16,000 0 0	16,000 0 0
X		....	2,250 0 0	2,250 0 0
XI		....	17,170 0 0	17,170 0 0
XII		....	845 0 0	845 0 0
XIIA		....	2,715 0 0	2,715 0 0
XIII		....	17,810 0 0	17,810 0 0
XIV		....	46,085 0 0	46,085 0 0
XVA		....	18,385 0 0	18,385 0 0
XVB		....	31,884 0 0	31,884 0 0
XVC		....	22,369 8 0	22,369 8 0
XVD		....	18,170 0 0	18,170 0 0
XVI		....	58,249 8 6	58,249 8 6
XVIA		....	12,400 0 0	12,400 0 0
XVII		....	1,565 0 0	1,565 0 0
XX		....	22,327 0 0	22,327 0 0
XXI		....	110 0 0	110 0 0
XXII		....	13,525 0 0	13,525 0 0
XXV		....	2,095 0 0	2,095 0 0
XXVI		....	45,633 0 0	45,633 0 0
XXVIIIA		....	12,755 0 0	12,755 0 0
XXVII		....	51,968 0 0	51,968 0 0
XXIX		....	5,790 0 0	5,790 0 0
XXXI		....	15,784 0 0	15,784 0 0
XXXIII		730 0 0	61,329 0 0	62,059 0 0
XXXIV		....	70 0 0	70 0 0
XXXVII		30,800 0 0	63,640 0 0	94,440 0 0
XXXVIII		12,774 6 0	1,43,330 8 0	1,56,104 14 0
XXXV		9,835 0 0	....	9,835 0 0
XLII		1,08,214 0 0	....	1,08,214 0 0
XLIII		2,050 0 0	....	2,050 0 0
Rehousing at Kerbala Tank Lane ..		....	9,625 0 0	9,625 0 0
Rehousing at Bow Street	75,000	....	38,124 2 8	38,124 2 8
Bustee Rehousing at Christopher Road		....	5,761 2 0	5,761 2 0
Rehousing M. B. S. No. I		....	1,600 0 0	1,600 0 0
Rehousing M. B. S. Paikpara ..		....	4,056 0 0	4,056 0 0
Excavation Area		....	11,347 0 0	11,347 0 0
Open space at Ratan Sircar Garden Street.		....	4,208 0 0	4,208 0 0
Storeyard		....	415 0 0	415 0 0
Cossipore-Chitpore Open Space		....	58,470 0 0	58,470 0 0
Street Alignment No.—				
XLV		....	1,850 0 0	1,850 0 0
I		....	275 0 0	275 0 0
II		1,610 0 0	14,770 0 0	16,380 0 0
V		....	160 0 0	160 0 0
VI		....	1,638 0 0	1,638 0 0
VII		....	500 0 0	500 0 0
IX		109 4 0	3,508 0 0	3,617 4 0
X		....	17,500 0 0	17,500 0 0
XI		....	1,525 0 0	1,525 0 0
XII		....	750 0 0	750 0 0
XIII		....	525 0 0	525 0 0
XVI		....	6,290 0 0	6,290 0 0
XX		....	186 0 0	186 0 0
XXVI		....	825 0 0	825 0 0
XXVII		....	4,700 0 0	4,700 0 0
XXXIV		....	27 0 0	27 0 0
XVIII		600 0 0	....	600 0 0
XLI		5 0 0	....	5 0 0
Carried over ..	75,000	1,72,252 10 0	42,71,220 10 10	44,43,473 4 10
	31,00,000	45,88,287 11 10	6,32,99,079 14 0	6,78,87,367 9 10

Capital Account—(Income)—*concluded.*

Receipts.	Budget for 1935-36.	Actuals for 1935-36.	Actuals to 31st March 1935.	Actuals to 31st March 1937.
	Rs.	Rs. a. p.	Rs. a. p.	Rs. a. p.
Brought forward ..	31,00,000	45,88,287 11 10	6,32,99,079 14 0	6,78,87,367 9 10
Brought forward ..	75,000	1,72,252 10 0	42,71,220 10 10	44,43,473 4 10
Bridges, Alipore		....	35 0 0	35 0 0
Bridges, Dum Dum		....	500 0 0	500 0 0
Maniktala Scheme No. I		....	31,195 0 0	31,195 0 0
Maniktala Scheme No. II		....	23,570 0 0	23,570 0 0
Maniktala Scheme No. III		14,990 0 0	14,710 0 0	29,700 0 0
Maniktala Alignment No. II . ..		....	1,104 0 0	1,104 0 0
	75,000	1,87,242 10 0	43,42,334 10 10	45,29,577 4 10
C. Under section 122 (g)—				
Premia on Leases	..	....	1,99,384 5 5	1,99,384 5 5
Fees for Footings	..	....	9,142 0 1	9,142 0 1
D. Under section 122 (e)—				
Sale of old materials	700	2,788 12 9	37,142 2 10	39,930 15 7
Sale of earth—				
Excavation area	800	267 0 0	53,827 9 9	54,094 9 9
C. C. O. S.	..	....	116 4 9	116 4 9
	1,500	3,055 12 9	91,086 1 4	94,141 14 1
Contribution for Engineering Works (Corporation)—				
Scheme No.—				
VIIC	42,290	....	42,289 4 8	42,289 4 8
VIIF	1,310	....	1,312 11 6	1,312 11 6
VIIG	9,800	....	8,359 5 7	8,359 5 7
VIIH	25,000	....	....	....
VIIJ	13,300	....	....	....
XVB	8,000	....	..	....
	99,700	....	51,961 5 9	51,961 5 9
Contribution for bridges (Government)—				
Dum Dum	..	....	4,55,221 1 7	4,55,221 1 7
Maniktala	500	....	3,01,753 0 10	3,01,753 0 10
Beliaghata	500	....	2,68,799 9 9	2,68,799 9 9
Narkeldanga	500	....	2,63,988 1 2	2,63,988 1 2
Alipore	3,000	2,918 7 8	1,66,460 1 3	1,69,378 8 11
Chitpore	5,500	1,480 0 7	98,092 11 5	99,572 12 0
Tollygunge	55,000	35,497 0 0	6,598 3 1	42,095 3 1
	65,000	39,895 8 3	15,60,912 13 1	16,00,808 5 4
Contribution for bridges (Corporation)—				
Dum-Dum	..	....	1,18,700 0 0	1,18,700 0 0
Maniktala		70,757 8 5	54,552 0 0	1,25,309 8 5
Beliaghata		57,715 11 8	50,000 0 0	1,07,715 11 8
Narkeldanga		1,05,569 15 3	....	1,05,569 15 3
Alipore	3,00,000	72,522 11 3	....	75,522 11 3
Chitpore		40,327 0 3	....	40,327 0 3
Tollygunge		3,107 1 2	....	3,107 1 2
	3,00,000	3,50,000 0 0	2,23,252 0 0	5,73,252 0 0
	36,41,200	51,68,483 10 10	6,97,153 2 6	7,49,45,636 13 4
E. Under section 122 (f)—				
Government grant	..	....	50,00,000 0 0	50,00,000 0 0
F. Under section 125 (a)—				
6 per cent. Sterling Debenture Loan of 1922	..	....	52,50,000 0 0	52,50,000 0 0
5½ per cent. Sterling Debenture Loan of 1923	..	....	1,05,00,000 0 0	1,05,00,000 0 0
6 per cent. Debenture Loan of 1925 .	..	....	50,00,000 0 0	50,00,000 0 0
5½ per cent. Debenture Loan of 1929 ..	..	....	25,00,000 0 0	25,00,000 0 0
4 per cent Debenture Loan of 1934 ..	..	....	50,00,000 0 0	50,00,000 0 0
3½ per cent Debenture Loan of 1935 ..	35,00,000	35,00,000 0 0	....	35,00,000 0 0
	35,00,000	35,00,000 0 0	2,82,50,000 0 0	3,17,50,000 0 0
Total ..	71,41,200	86,68,481 10 10	10,30,27,153 2 6	11,16,95,634 13 4
Transferred from Revenue Account ..	..	*Dr.* 2,04,772 6 8	4,77,32,922 4 0	4,75,28,149 13 4
GRAND TOTAL ..	..	84,63,709 4 2	15,07,60,075 6 6	15,92,23,784 10 8

Capital Account—Statement of Income and Expenditure.

Expenditure.

Expenditure	Budget for 1935 36	Actuals for 1935-36	Actuals to 31st March 1935.	Actuals to 31st March 1936.
	Rs.	Rs a p.	Rs a. p	Rs. a p.
Under section 123 (a)—				
Scheme No 1—(Surtibagan)—				
Engineering Works	..	....	2,08,479 14 0	2,08,479 14 0
Cost of acquiring land	..	28 0 0	30,15,150 12 0	30,15,178 12 0
Other Charges	..	....	43,046 9 11	43,046 9 11
	..	28 0 0	32,66,677 3 11	32,66,705 3 11
Scheme No. 1 —(Alteration)—				
Cost of acquiring land	..	96 0 0	5,06,985 7 9	5,07,081 7 9
Other charges	..	....	3,897 0 3	3,897 0 3
	..	96 0 0	5,10,882 8 0	5,10,978 8 0
Scheme No. 1A—(Surtibagan)—				
Engineering works	..	....	31,326 11 2	31,326 11 2
Cost of acquiring land	..	....	8,710 2 7	8,710 2 7
Other charges	..	....	3,307 7 7	3,307 7 7
	..	.. ..	43,344 5 4	43,344 5 4
Scheme No. 1A—(Alteration)—				
Cost of acquiring land	..	....	2,31,124 7 8	2,31,124 7 8
Other charges	..	....	1,208 5 10	1,208 5 10
	..	....	2,32,332 13 6	2,32,332 13 6
Scheme No. 1B—(Surtibagan)—				
Engineering works	..	....	13,483 6 7	13,483 6 7
Cost of acquiring land	..	....	3,26,016 8 5	3,26,016 8 5
Other charges	..	...	2,379 8 6	2,379 8 6
	..	....	3,41,879 7 6	3,41,879 7 6
Scheme No 1C—(Ismail Madan Lane)—				
Engineering works	..	...	57,110 3 10	57,110 3 10
Cost of acquiring land	..	48 0 0	7,52,593 14 5	7,52,641 14 5
Other charges	..	....	4,958 7 10	4,958 7 10
	..	48 0 0	8,14,662 10 1	8,14,710 10 1
Scheme No. 11—(Shambazar Bridge Road)—				
Engineering works	..	...	2,76,214 5 0	2,76,214 5 0
Cost of acquiring land	..	42 0 0	11,96,526 7 4	11,96,568 7 4
Other charges	..	....	16,692 12 0	16,692 12 0
		42 0 0	14,89,433 8 4	14,89,475 8 4
Scheme No. 11A—(Cornwallis Street)—				
Engineering works	..	....	16,968 8 5	16,968 8 5
Cost of acquiring land	..	....	1,09,378 6 6	1,09,378 6 6
Other charges	..	....	752 4 0	752 4 0
	..	....	1,27,099 2 11	1,27,099 2 11
Scheme No. III—(Wards Institution Lane)—				
Engineering works	..	....	59,326 5 6	59,326 5 6
Cost of acquiring land	..	....	1,33,627 13 1	1,33,627 13 1
Other charges	..	....	2,089 1 11	2,089 1 11
	..	....	1,95,043 4 6	1,95,043 4 6
Carried over	..	214 0 0	70,21,355 0 1	70,21,569 0 1

Capital Account—(Expenditure)—*continued*

Expenditure	Budget for 1935-36.	Actuals for 1935-36.	Actuals to 31st March 1935.	Actuals to 31st March 1936
	Rs.	Rs. a. p.	Rs. a. p.	Rs. a. p.
Brought forward ..	..	214 0 0	70,21,355 0 1	70,21,569 0 1
Scheme No. IV—(Russa Road Widening)—				
Engineering works	..	....	7,82,301 11 3	7,82,301 11 3
Cost of acquiring land	..	16 0 0	17,54,843 4 10	17,54,859 4 10
Other charges	..	....	45,522 12 10	45,522 12 10
	..	16 0 0	25,82,667 12 11	25,82,683 12 11
Scheme No. IVA—(Russa Road Extension)—				
Other charges	..	8 6 10	1,82,178 11 7	1,82,187 2 5
Advertisement, etc.	100	....	....	....
Auctioneer's fees	20	....	....	....
Cost of acquiring land	..	154 0 0	30,37,824 9 1	30,37,978 9 1
Engineering works	17,316	10,593 4 5	27,60,205 8 10	27,70,798 13 3
	17,436	10,755 11 3	59,80,208 13 6	59,90,964 8 9
Scheme No. V—(Bhowanipore)—				
Engineering works	..	6 4 8	20,10,521 15 2	20,10,528 3 8
Cost of acquiring land	..	70 0 0	28,31,920 4 3	28,31,990 4 3
Other charges	..	....	81,191 12 6	81,191 12 6
	..	76 4 6	49,23,633 15 11	49,23,710 4 5
Scheme No. V—(Alteration)—				
Cost of land	..	....	19,374 7 6	19,374 7 6
Other charges	..	....	80 0 0	80 0 0
	..	....	19,544 7 6	19,454 7 6
Scheme No. VI—(China Bazar)—				
Other charges	..	....	1,798 12 6	1,798 12 6
Scheme No. VII—(Chitpore Spur)—				
Cost of acquiring land	..	164 0 0	21,64,916 1 11	21,65,080 1 11
Engineering works	..	....	3,15,166 10 2	3,15,166 10 2
Other charges	..	....	27,488 9 3	27,488 9 3
	..	164 0 0	25,07,571 5 4	25,07,735 5 4
Scheme No. VII—(Chittaranjan Avenue Machuabazar Street to Beadon Street)—				
Cost of acquiring land	..	651 8 0	41,89,800 7 9	41,90,451 15 9
Engineering works	1,000	87 4 6	12,30,997 0 3	12,31,084 4 9
Other charges	..	19 8 0	1,17,817 4 11	1,17,836 12 11
	1,000	758 4 6	55,38,614 12 11	55,39,373 1 5
Scheme No. VIIA—(Chittaranjan Avenue—Colootola Street to Bowbazar Street)—				
Cost of acquiring land	..	1,627 0 0	16,98,624 15 11	17,00,251 15 11
Engineering works	..	....	1,93,546 13 0	1,93,546 13 0
Other charges	..	....	18,077 4 3	18,077 4 3
	..	1,627 0 0	19,10,249 1 2	19,11,876 1 2
Carried over	18,436	13,611 4 3	3,04,85,554 1 10	3,04,99,165 6 1

Capital Account—(Expenditure)—*continued.*

Expenditure.	Budget for 1935-36.	Actuals for 1935-36.	Actuals to 31st March 1935.	Actuals to 31st March 1936.
	Rs.	Rs. a. p.	Rs. a. p.	Rs. a. p.
Brought forward ..	18,436	13,611 4 3	3,04,85,554 1 10	3,04,99,165 6 1
Scheme No. VIIB—(Chittaranjan Avenue—Maniktala Spur)—				
Cost of acquiring land	..	109 0 0	22,26,433 15 2	22,26,542 15 2
Engineering works	..	....	2,23,412 13 6	2,23,412 13 6
Other charges	..	....	24,904 4 3	24,904 4 3
	..	109 0 0	24,74,751 0 11	24,74,860 0 11
Scheme No. VIIC—(Chittaranjan Avenue—Maniktala Spur)—				
Other charges	..	453 6 2	83,966 2 7	84,419 8 9
Advertisement, etc.	100	....	....	....
Auctioneer's fees	100	....	....	....
Cost of acquiring land	..	129 0 0	50,57,728 3 10	50,57,857 3 10
Engineering works	50,000	1,109 2 6	6,31,373 10 1	6,32,482 12 7
	50,200	1,691 8 8	57,73,068 0 6	57,74,759 9 2
Scheme No. VIID—(Chittaranjan Avenue—Bowbazar Street to Prinsep Street)—				
Maintenance	..	7 6 0	....	7 6 0
Advertisement, etc.	100	71 6 8	1,885 5 4	1,956 12 0
Auctioneer's fees	1,000	594 14 4	10,354 6 9	10,949 5 1
Conservancy	..	....	8,048 5 9	8,048 5 9
Street lighting	..	....	27,755 1 7	27,755 1 7
Street watering	..	....	3,377 1 5	3,377 1 5
Telephone	..	....	1,718 11 2	1,718 11 2
Cost of survey	..	....	970 14 4	970 14 4
Cost of acquring land	..	89 0 0	35,25,361 7 6	35,25,450 7 6
Engineering works	5,000	....	....	....
Road construction, drainage and sewerage	..	152 6 6	3,62,315 9 11	3,62,468 0 5
Earth removal	..	....	28,070 12 3	28,070 12 3
Contingencies	..	....	10,037 1 3	10,037 1 3
Taking up and relaying electric cables ..	..	....	7,317 3 3	7,317 3 3
Water supply	..	....	57,550 8 8	57,550 8 8
Miscellaneous	..	8 12 0	1,135 2 10	1,143 14 10
Tree planting	..	48 14 6	148 1 4	196 15 10
Lighting—Gas and electric ..	..	....	16,226 7 3	16,226 7 3
Laying out of open space ..	..	....	2,128 4 3	2,128 4 3
Tank-filling	..	....	243 6 0	243 6 0
	6,100	972 12 0	40,64,643 14 10	40,65,616 10 10
Scheme No. VIIE—(Chittaranjen Avenue—Prinsep Street to Chowringhee)—				
Street lighting	..	....	33,732 0 8	33,732 0 8
Street watering	..	....	5,212 15 0	5,212 15 0
Advertisement, etc.	100	70 15 7	3,334 0 11	3,405 0 6
Maintenance	..	7 6 9	143 7 0	150 13 9
Conservancy	..	....	12,637 1 11	12,637 1 11
Cost of survey	..	....	1,346 5 11	1,346 5 11
Auctineer's fees	1,750	334 8 5	37,382 9 0	37,717 1 5
Cost of acquiring land	..	166 0 0	1,55,71,122 3 9	1,55,71,288 3 9
Telephone	..	....	496 14 6	496 14 6
Engineering works	5,000	....	....	....
Miscellaneous	..	3 14 4	1,030 4 3	1,034 2 7
Earth removal	..	....	51,239 9 0	51,239 9 0
Road construction, drainage and sewerage	..	1,412 14 3	4,11,516 7 9	4,12,929 6 0
Water supply	..	....	81,203 13 6	81,203 13 6
Lighting—Gas and electric ..	..	....	16,936 2 3	16,936 2 3
Taking up and relaying telephone lines	..	....	4,639 7 5	4,639 7 5
Taking up and relaying electric cables	..	....	4,436 12 9	4,436 12 9
Contingencies	..	25 0 0	19,832 6 6	19,857 6 6
Tramway	..	....	49,140 5 8	49,140 5 8
Tree plainting	..	41 10 9	157 11 1	199 5 10
Park construction	..	....	7,441 1 6	7,441 1 6
Petty work, etc.	..	....	222 3 2	222 3 2
Tank filling, etc.	..	....	757 4 0	757 4 0
	6,850	2,062 6 1	1,63,13,961 3 6	1,63,16,023 9 7
Carried over ..	81,586	18,446 15 0	5,91,11,978 5 7	5,91,30,425 4 7

Capital Account—(Expenditure)—*continued.*

Expenditure.	Budget for 1935-36.	Actuals for 1935-36.	Actuals to 31st March 1935.	Actuals to 31st March 1936.
	Rs.	Rs a. p.	Rs. a. p.	Rs a. p.
Brought forward ..	81,586	18,446 15 0	5,91,11,978 5 7	5,91,30,425 4 7
Scheme No. VIIF—(Chittaranjan Avenue to Upper Chitpore Road)—				
Street lighting	..	66 0 0	12,387 10 9	12,453 10 9
Advertisement, etc.	100	70 15 7	3,468 14 5	3,539 14 4
Cost of survey	..	....	544 3 1	544 3 1
Cost of acquiring land	..	203 0 0	25,62,578 10 6	25,62,781 10 6
Telephone	..	....	348 12 5	348 12 5
Conservancy	..	....	12,810 10 0	12,810 10 0
Auctioneer's fees	250	....	5,296 12 7	5,296 12 7
Maintenance	..	....	72 4 2	72 4 2
Engineering works	10,156	....	...	....
Road construction, etc.	..	6,193 12 9	2,56,374 7 1	2,62,568 3 10
Waterworks	..	10 14 0	24,857 11 0	24,868 9 0
Taking up and relaying electric supply cables	..	....	358 0 6	358 0 6
Taking up and relaying telephone lines	..	....	813 1 9	813 1 9
Contingencies	..	....	7,050 15 8	7,050 15 8
Earth removal	..	....	37,525 4 4	37,525 4 4
Miscellaneous	..	14 12 3	2,405 10 11	2,418 9 2
Lighting—Gas and electric	..	....	7,750 12 5	7,750 12 5
Park construction	..	....	431 14 6	431 14 6
Tramway	..	....	409 4 4	409 4 4
Petty works, etc.	..	....	17 8 0	17 8 0
	10,506	6,557 8 7	29,35,502 8 5	29,42,060 1 0
Scheme No. VIIG—(Jaggannath Ghat Road from Chitpore to Strand Road)—				
Maintenance	....	....	14 4 0	14 4 0
Street lighting	....	2,085 9 2	17,282 10 6	19,368 3 8
Conservancy	....	2,416 7 0	17,453 1 0	19,869 8 0
Telephone	....	228 10 0	992 4 8	1,220 14 8
Advertisement	100	70 15 7	1,445 2 6	1,516 2 1
Cost of survey	....	....	1,058 13 0	1,058 13 0
Cost of acquiring land	....	16,595 13 10	46,71,013 0 9	46,87,608 14 7
Auctioneer's fees	500	644 0 6	11,951 8 4	12,595 8 10
Engineering works	75,000	.	...	....
Road construction, etc. ..	....	95,545 13 8	2,56,108 12 8	3,51,654 10 4
Earth removal	....	1,013 2 9	6,024 5 8	7,037 8 5
Contingencies	....	....	4,655 15 7	4,655 15 7
Waterworks	....	37 6 3	32,121 13 7	32,159 3 10
Electric cables, etc.	....	....	3,176 15 11	3,176 15 11
Miscellaneous	....	834 13 3	3,903 1 6	4,737 14 9
Lighting—gas and electric ..	....	....	8,385 11 9	8,385 11 9
Sewer construction	....	....	9,798 14 3	9,798 14 3
Petty works, etc.	....	104 9 9	485 2 7	589 12 4
Tree planting	....	17 0 0	20 8 0	37 8 0
Taking up and relaying telephone cables	....	....	1,027 8 10	1,027 8 10
Tramways	....	....	6,459 0 0	6,459 0 0
	75,600	1,19,594 5 9	50,53,378 11 1	51,72,973 0 10
Scheme No. VIIH—(Chittaranjan Avenue—Beadon Street to Grey Street)—				
Conservancy	....	5,351 3 0	8,085 15 6	13,437 2 6
Advertisement, etc.	100	85 15 6	803 1 0	889 0 6
Auctioneer's fees	1,250	1,771 8 5	8,018 3 4	9,789 11 9
Cost of survey	..	169 8 0	1,164 0 8	1,333 8 8
Telephone	..	....	713 12 0	713 12 0
Cost of acquiring land ..	..	42,406 11 4	46,23,072 4 0	46,65,478 15 4
Street watering	..	1,138 2 0	1,854 7 0	2,992 9 0
Street lighting	..	3,379 11 8	3,557 0 3	6,936 11 11
Maintenance ..		....	803 7 0	803 7 0
Engineering works	25,000	....	....	...
Road construction, etc.	..	28,282 2 6	2,41,005 13 11	2,69,288 0 5
Water supply	..	2,452 2 4	78,770 3 9	81,222 6 1
Miscellaneous	..	408 3 9	1,892 6 6	2,300 10 3
Earth removal	..	423 10 3	3,595 1 0	4,018 11 3
Lighting	..	5,767 6 11	4,792 5 4	10,559 12 3
Contingencies	..	6 9 6	849 9 3	856 2 9
Park construction	..	4,251 0 3	3,339 12 6	7,590 12 9
Alteration of electric cables ..	..	....	1,214 3 0	1,214 3 0
Alteration of telephone cables ..	..	....	11 4 9	11 4 9
Tree planting ..	..	121 1 3	643 3 0	764 4 3
	26,350	96,015 0 8	49,84,186 1 9	50,80,201 2 5
Carried over ..	1,94,042	2,40,613 14 0	7,20,85,045 10 10	7,23,25,659 8 10

Capital Account—(Expenditure)—*continued.*

Expenditure.	Budget for 1935-36.	Actuals for 1935-36	Actuals to 31st March, 1935	Actuals to 31st March 1936.
	Rs.	Rs. a. p.	Rs. a. p.	Rs. a. p.
Brought forward ..	1,94,042	2,40,613 14 0	7,20,85,045 10 10	7,23,25,659 8 10
Scheme No. VIIJ—(Chittaranjan Avenue—Grey Street to Shambazar Street)—				
Telephone	....	....	500 5 3	500 5 3
Cost of survey	....	2 0 0	1,048 9 9	1,050 9 9
Advertisement, etc.	100	85 15 6	558 1 4	644 0 10
Auctioneers' fees	1,000	651 8 2	5,756 0 11	6,407 9 1
Conservancy	....	2,164 11 0	3,151 4 0	5,315 15 0
Street lighting	....	3,090 15 9	2,117 13 6	5,208 13 3
Cost of acquiring land	....	9,972 4 5	30,40,055 9 3	30,49,127 13 8
Engineering works	25,000	....	....	
Road constructions, etc. ..	..	4,796 12 10	1,30,456 2 1	1,35,252 14 11
Water supply ..	..	504 11 3	46,039 14 4	46,544 9 7
Lighting ..	..	2,514 1 7	9,237 2 8	11,751 3 3
Alteration of electric cables, etc. ..	..	....	57 0 0	57 0 0
Petty works establishment ..	..	138 0 0	597 14 0	735 14 0
Miscellaneous	..	273 1 1	779 10 10	1,052 11 11
Contingencies	..	....	106 0 0	106 0 0
Earth cutting	..	....	443 4 3	443 4 3
Earth removal	..	254 0 9	8,109 13 0	8,363 13 9
Alteration to telephone cables ..	..	....	136 4 7	136 4 7
Tree planting	..	191 2 6	550 7 3	741 9 9
Park construction	..	....	5,804 10 9	5,804 10 9
	26,100	23,739 4 10	32,55,505 14 0	32,79,245 9 7
Scheme No. VIII—(Park Street Extension)—				
Other charges ..	....	70 15 7	82,705 15 1	82,776 14 8
Advertisement, etc.	100	....	....	...
Auctioneer's fees	250	....	...	.
Cost of acquiring land	....	52 0 0	28,25,531 8 9	28,25,583 8 9
Engineering works	10,000	5,395 7 5	16,22,344 10 7	16,27,740 2 0
Total ..	10,350	5,518 7 0	45,30,582 2 5	45,36,100 9 5
Scheme No. VIIIA—(Outer Park Street)—				
Other charges	....	366 12 5	45,964 0 1	46,330 12 6
Advertisement, etc.	100	....	....	...
Auctioneer's fees	250	....	....	....
Cost of acquiring land	....	71 0 0	16,96,773 11 7	16,96,844 11 7
Engineering works ..	10,000	5,940 3 8	6,07,060 6 6	6,13,000 10 2
	10,350	6,378 0 1	23,49,798 2 2	23,56,176 2 3
Scheme No. VIIIB—(Gorachand Area)—				
Preliminary expenses	..	....	380 14 0	380 14 0
Cost of survey	..	....	4 3 11	4 3 11
	..	....	385 1 11	385 1 11
Scheme No. VIIIC—New Park Street to Ballygunge Main Road)—				
Cost of survey	..	44 7 0	1,793 14 9	1,838 5 9
Advertisement, etc.	100	70 15 5	1,097 10 3	1,168 9 8
Auctioneer's fees	500	404 3 11	6,057 14 11	6,462 2 10
Cost of acquiring land	..	12,803 2 11	23,99,004 15 10	24,11,808 2 9
Street lighting	..	....	17,903 2 2	17,903 2 2
Telephone	..	....	824 10 3	824 10 3
Street watering	..	....	2,712 9 8	2,712 9 8
Conservancy ..	..	....	14,019 4 10	14,019 4 10
Maintenance	..	....	8,573 0 0	8,573 0 0
Engineering Works	10,000	....	....	....
Road construction, etc. ..	..	4,190 8 11	3,48,825 10 6	3,53,016 3 5
Waterworks	..	54 4 11	58,620 4 3	58,674 9 2
Carried over ..	10,600	17,567 11 1	28,59,433 1 5	28,77,000 12 6
Carried over ..	2,40,842	2,76,249 9 11	8,22,21,317 0 1	8,24,97,566 10 0

Capital Account—(Expenditure)—*continued.*

Expenditure.	Budget for 1935-36.	Actuals for 1935-36.	Actuals to 31st March 1935.	Actuals to 31st March 1936.
	Rs.	Rs. a. p.	Rs. a p.	Rs. a. p.
Brought forward ..	2,40,842	2,76,249 9 11	8,22,21,317 0 1	8,24,97,566 10 0
Scheme No. VIIIC—(New Park Street to Ballygunge Main Road)—concld.				
Brought forward ..	10,600	17,567 11 1	28,59,433 1 5	28,77,000 12 6
Tank-filling and land raising ..	..	....	74,192 7 0	74,192 7 0
Lighting—gas and electric ..	..	213 14 11	14,897 8 2	15,111 7 1
Miscellaneous	..	....	2,227 1 1	2,227 1 1
Contingencies	..	16 0 0	14,057 14 11	14,073 14 11
Taking up and relaying telegraph poles.	..	....	14 0 0	14 0 0
Taking up and relaying electric poles	..	....	3,259 13 7	3,259 13 7
Tree planting	..	....	2,432 14 0	2,432 14 0
Miscellaneous and petty items ..	..	....	936 9 8	936 9 8
Earth removal	..	....	2,850 9 9	2,850 9 9
Petty works establishment ..	..	....	35 0 0	35 0 0
Public convenience	..	....	639 0 0	639 0 0
	10,600	17,797 10 0	29,74,975 15 7	29,92,773 9 7
Scheme No. IX—(Old Post Office Street Widening)—				
Cost of acquiring land	..	....	2,60,639 11 1	2,60,639 11 1
Engineering works	..	....	2,575 6 9	2,575 6 9
Other charges	..	....	2,285 1 1	2,285 1 1
	..	....	2,65,500 2 11	2,65,500 2 11
Scheme No. X—(Ripon Street Triangle)—				
Cost of acquiring land	..	56 0 0	48,452 5 6	48,508 5 6
Engineering works	..	....	13,623 8 5	13,623 8 5
Other charges	..	....	431 9 4	431 9 4
	..	56 0 0	62,507 7 3	62,563 7 3
Scheme No. XI—(St. James Square)—				
Cost of acquiring land	..	12 0 0	5,77,317 14 7	5,77,329 14 7
Engineering works	..	....	87,383 9 2	87,383 9 2
Other charges	..	....	8,920 8 8	8,920 8 8
	..	12 0 0	6,73,622 0 5	6,73,634 0 5
Scheme No. XII—(Park Street Widening)—				
Cost of acquiring land	..	....	4,28,585 5 6	4,28,585 5 6
Engineering works	..	....	2,27,779 3 2	2,27,779 3 2
Other charges	..	....	17,406 0 9	17,406 0 9
	..	....	6,73,770 9 5	6,73,770 9 5
Scheme No. XIIA—(Park Street Widening from Wood Street to Loudon Street)—				
Other charges	..	....	5,146 4 0	5,146 4 0
Cost of acquiring land	..	....	2,32,818 7 7	2,32,818 7 7
Engineering works	20,000	15,271 12 3	66,756 6 10	82,028 3 1
	20,000	15,271 12 3	3,04,721 2 5	3,19,992 14 8
Scheme No. XIII—(Marcus Square Extension)—				
Cost of acquiring land	..	....	4,38,807 12 9	4,38,807 12 9
Engineering works	..	....	79,355 12 5	79,355 12 5
Other charges	..	....	3,346 15 7	3,346 15 7
	..	....	5,21,510 8 9	5,21,510 8 9
Carried over ..	2,71,442	3,09,387 0 2	8,76,97,924 14 10	8,80,07,311 15 0

Capital Account—(Expenditure)—*continued.*

Expenditure	Budget for 1935-36.	Actuals for 1935-36.	Actuals to 31st March 1935.	Actuals to 31st March 1936.
	Rs.	Rs. a. p.	Rs. a. p.	Rs. a. p.
Brought forward ..	2,71,442	3,09,357 0 2	8,76,97,924 14 10	8,80,07,311 15 0
Scheme No. XIV—(Deshbandhu Park)—				
Cost of acquiring land	..	....	9,67,284 15 3	9,67,284 15 3
Engineering works	..	....	2,03,601 7 2	2,03,601 7 2
Other items	..	....	10,320 14 5	10,320 14 5
	..	....	11,81,207 4 10	11,81,207 4 10
Scheme No. XIVA—				
Preliminary expenses	..	....	259 14 0	259 14 0
Scheme No. XVA—(Tolly's Nullah to Russa Road)—				
Other charges	..	290 2 10	17,418 4 7	17,708 7 5
Advertisement, etc.	100	....	....	....
Auctioneer's fees	125	....	....	....
Cost of acquiring land	..	22 0 0	7,34,805 12 4	7,34,827 12 4
Engineering works	5,000	27,921 3 4	3,50,845 12 7	3,78,766 15 11
	5,225	28,233 6 2	11,03,069 13 6	11,31,303 3 8
Scheme No. XVB—(Rashbehari Avenue)—				
Street watering	..	....	10,151 2 0	10,151 2 0
Advertisement, etc.	100	70 15 5	2,628 14 0	2,699 13 5
Auctioneer's fees	1,250	1,636 1 11	20,624 7 10	22,260 9 9
Cost of survey	..	49 6 6	5,269 12 2	5,319 2 8
Cost of acquiring land	..	3,640 3 9	42,54,214 4 7	42,57,854 8 4
Street lighting	..	43 5 8	43,967 4 7	44,010 10 3
Maintenance	..	....	6,122 12 0	6,122 12 0
Conservancy	..	27 8 0	21,175 3 0	21,202 11 0
Telephone	..	....	1,874 1 10	1,874 1 10
Engineering works	25,000	....	....	....
Road construction, drainage and sewerage	..	1,28,797 2 2	12,53,301 4 8	13,82,098 6 10
Earth removal	..	....	2,270 14 3	2,270 14 3
Contingencies	..	81 0 0	29,201 0 8	29,282 0 8
Water supply	..	74 2 10	3,48,479 2 1	3,48,553 4 11
Lighting—Gas and electric ..	..	....	62,295 3 1	62,295 3 1
Tank-filling, etc.	..	....	3,81,390 2 0	3,81,390 2 0
Miscellaneous	..	640 8 2	9,255 9 5	9,896 1 7
Park construction	..	....	61,401 11 3	61,401 11 3
Shifting electric poles	..	....	105 9 3	105 9 3
Tree planting	..	....	5,505 11 5	5,505 11 5
Petty works establishment	..	131 14 6	51 15 0	183 13 6
	26,350	1,35,192 4 11	65,19,286 1 1	66,54,478 6 0
Scheme No. XVC—(Gariahat Road to Ballygunge Station)—				
Other charges	..	882 1 0	20,584 0 4	21,466 1 4
Advertisement, etc.	100	....	....	....
Auctioneer's fees	375	....	....	....
Cost of acquiring land	..	32 0 0	11,47,115 11 2	11,47,147 11 2
Engineering works	5,000	39,929 0 2	5,40,152 7 11	5,80,081 8 1
	5,475	40,843 1 2	17,07,852 3 5	17,48,695 4 7
Scheme No. XVD—(Lansdowne Road Extension)—				
Maintenance	..	....	191 9 6	191 9 6
Street watering	..	911 4 0	2,362 13 0	3,274 1 0
Street lighting	..	1,295 0 3	3,386 7 6	4,681 7 9
Cost of survey	..	4 0 0	1,013 8 0	1,017 8 0
Conservancy	..	3,013 4 0	7,988 3 0	11,001 7 0
Auctioneer's fees	250	139 11 1	3,287 1 6	3,426 12 7
Advertisement, etc.	100	70 15 5	633 12 11	704 12 4
Cost of acquiring land	..	3,017 3 0	7,95,742 6 2	7,98,759 9 2
Carried over ..	350	8,451 5 9	8,14,605 13 7	8,23,057 3 4
Carried over ..	3,08,492	5,13,655 12 5	9,82,09,600 3 8	9,87,23,256 0 1

Capital Account—(Expenditure)—*continued.*

Expenditure.	Budget for 1935-36.	Actuals for 1935-36.	Actuals to 31st March 1935.	Actuals to 31st March 1936.
	Rs.	Rs. a. p.	Rs. a. p.	Rs. a. p.
Brought forward ..	3,08,492	5,13,655-12-5	9,82,09,600-3-8	9,87,23,256-0-1
Brought forward ..	350	8,451-5-9	8,14,605-13-7	8,23,057-3-4
Engineering works	5,000	....	....	....
Tank-filling	..	....	11,386 7 9	11,386 7 9
Road construction, etc.	..	10,201 0 2	1,03,878 7 9	1,14,079 7 11
Contingency	..	....	344 8 0	344 8 0
Earth removal	..	6 0 0	5,949 12 9	5,955 12 9
Petty works	..	30 7 9	105 0 0	135 7 9
Lighting—Gas and electric ..	..	55 5 0	5,040 2 8	5,095 7 8
Water supply	..	186 15 6	22,263 4 7	22,450 4 1
Miscellaneous	..	139 1 4	732 5 2	871 6 6
Tree planting	..	409 0 3	2,104 11 9	2,513 12 0
	5,350	19,479 3 9	9,66,410 10 0	9,85,889 13 9
Scheme No. XVI—(Diamond Harbour Road Widening)—				
Other charges	475	207 5 3	44,302 6 4	44,509 11 7
Cost of acquiring land	..	63 0 0	18,09,468 15 10	18,09,531 15 10
Engineering works	1,000	1,161 12 6	5,47,253 9 8	5,48,415 6 2
	1,475	1,432 1 9	24,01,024 15 10	24,02,457 1 7
Scheme No. XVIA—(Diamond Harbour Road Widening)—				
Other charges	225	215 5 5	36,321 7 4	36,536 12 9
Cost of acquiring land	..	3,038 0 0	5,53,627 13 6	5,56,665 13 6
Engineering works	1,000	1,307 7 0	1,67,457 3 5	1,68,764 10 5
	1,225	4,560 12 5	7,57,406 8 3	7,61,967 4 8
Scheme No. XVII—(Chatawalla Gullee)—				
Other charges	..	71 8 6	3,397 7 8	3,469 0 2
Cost of acquiring land	..	49 0 0	6,30,631 0 1	6,30,680 0 1
Engineering works	..	....	23,338 9 11	23,338 9 11
	..	120 8 6	6,57,367 1 8	6,57,487 10 2
Scheme No. XVIIA—(Eden Hospital Road)—				
Preliminary expenses	..	....	505 10 0	505 10 0
Cost of survey	..	....	20 0 0	20 0 0
	..	....	525 10 0	525 10 0
Scheme No. XVIII—				
Preliminary expenses	..	..	257 15 6	257 15 6
Scheme No. XVIIIA—				
Preliminary expenses	..	....	7 0 0	7 0 0
Scheme No. XIX—(Gariahat Road Diversion)—				
Cost of acquiring land	..	....	92,327 0 0	92,327 0 0
Engineering works	..	....	15,917 5 6	15,917 5 6
Other charges	..	....	1,667 7 7	1,667 7 7
	..	....	1,09,911 13 1	1,09,911 13 1
Carried over ..	3,16,542	5,39,248-6-10	10,31,02,511-14-0	10,36,41,760-4-10

Capital Account—(Expenditure)—*continued.*

Expenditure.	Budget for 1935-36.	Actuals for 1935-36.	Actuals to 31st March 1935.	Actuals to 31st March 1936.
	Rs.	Rs. a. p.	Rs. a. p.	Rs. a. p.
Brought forward ..	3,16,542	5,30,248 6 10	10,31,02,511 14 0	10,36,41,760 4 10
Scheme No. XX—(Dharamtala Street to Corporation Street)—				
Other charges	225	14 0 3	7,184 11 0	7,198 11 3
Cost of acquiring land	..	27 0 0	5,18,493 8 0	5,18,520 8 0
Engineering works	2,000	3,342 14 3	51,306 7 8	54,649 5 11
	2,225	3,383 14 6	5,76,984 10 8	5,80,368 9 2
Scheme No. XXI—(Dalhousie Square)—				
Engineering works	..	....	54,075 2 10	54,075 2 10
Other charges	..	....	2,408 3 10	2,408 3 10
	..	....	56,483 6 8	56,483 6 8
Scheme No. XXII—(Nebutala Lane Widening)—				
Cost of acquiring land	..	394 7 0	4,99,765 10 3	5,00,160 1 3
Engineering works	1,000	82 8 10	85,582 7 8	85,665 0 6
Other charges	350	412 4 2	9,116 7 4	9,528 11 6
	1,350	889 4 0	5,94,464 9 3	5,95,353 13 3
Scheme No. XXIII—(20 feet Road from Kerbala Tank Lane Rehousing Scheme to Upper Circular Road)—				
Preliminary expenses	..	....	282 1 0	282 1 0
Scheme No. XXIV—(Lindsay Street Extension)—				
Prliminary expenses	..	....	412 12 0	412 12 0
Scheme No. XXV—(Kapalitola Lane Widening)—				
Cost of acquiring land	..	....	33,152 0 0	33,152 0 0
Engineering works	..	....	3,244 14 1	3,244 14 1
Other charges	..	....	711 7 2	711 7 2
	..	....	37,108 5 3	37,108 5 3
Scheme No. XXVI—(Darmahatta Street to Pathuriaghatta Street)—				
Street lighting	..	267 9 0	1,629 1 11	1,896 10 11
Conservancy	..	....	2,312 8 0	2,312 8 0
Auctioneer's fees	1,125	527 9 5	3,591 13 5	4,119 6 10
Advertisement, etc.	100	70 15 5	957 7 11	1,028 7 4
Cost of survey	..	....	510 6 2	510 6 2
Cost of acquiring land	..	1,285 0 0	13,04,602 9 4	13,05,887 9 4
Engineering Works	5,000	....	....	....
Road construction, etc. ..	..	2,527 8 0	57,878 15 9	60,406 7 9
Water supply	..	14 1 0	9,106 14 5	9,120 15 5
Lighting	..	....	1,878 6 8	1,878 6 8
Petty Works Establishment ..	..	....	250 0 0	250 0 0
Miscellaneous, petty item ..	..	....	1,475 4 9	1,475 4 9
Contingencies	..	....	20 0 0	20 0 0
Earth removal	..	161 5 3	3,038 6 9	3,199 12 0
Relaying electric cables	..	....	806 0 0	806 0 0
	6,225	4,854 0 1	13,88,057 15 1	13,92,911 15 2
Carried over ..	3,26,342	5,48,375 9 5	10,57,56,305 9 11	10,63,04,681 3 4

Capital Account—(Expenditure)—*continued.*

Expenditure.	Budget for 1935-36.	Actuals for 1935-36.	Actuals to 31st March 1935	Actuals to 31st March 1936.
	Rs.	Rs. a. p.	Rs. a. p.	Rs. a. p.
Brought forward ..	3,26,342	5,48,375 9 5	10,57,56,305 9 11	10,63,04,681 3 4
Scheme No. XXVII—(Burrabazar-Maidapati Area)—				
Street lighting	..	462 0 0	4,536 9 2	4,998 9 2
Auctioneer's fees	1,000	....	5,549 3 6	5,549 3 6
Advertisement, etc.	100	70 15 5	504 1 3	575 0 8
Cost of acquiring land	..	355 15 3	33,36,004 0 2	33,36,359 15 5
Conservancy	..	....	7,613 3 0	7,613 3 0
Cost of survey	..	....	381 14 10	381 14 10
Engineering works	5,000	....	....	....
Road construction, etc.	..	506 11 9	67,282 10 7	67,789 6 4
Contingencies	..	....	1,415 2 6	1,415 2 6
Water supply	..	9 6 0	8,595 6 10	8,604 12 10
Miscellaneous	..	....	472 15 9	472 15 9
Lighting	..	....	3,495 2 9	3,495 2 9
Earth removal	..	....	9,719 11 0	9,719 11 0
Park construction	..	152 5 6	3,093 10 3	3,245 15 9
Alteration in telephone lines and poles.	..	....	126 4 4	126 4 4
Alteration in electric cables and poles.	..	....	3,096 4 6	3,096 4 6
Public convenience	..	....	639 0 0	639 0 0
	6,100	1,557 5 11	34,52,525 4 5	34,54,082 10 4
Scheme No. XXVIIIA—(Strand Road Widening from Raja Woodmunt Street to Howrah Bridge Approach)—				
Other charges	..	188 12 5	10,401 13 4	10,590 9 9
Cost of acquiring land	..	....	5,79,638 0 0	5,79,638 0 0
Engineering works	500	*Cr.* 512 8 0	81,218 4 4	80,705 12 4
	500	*Cr.* 323 11 7	6,71,258 1 8	6,70,934 6 1
Scheme No. XXIX—(Connecting Road, C. C. O. S.)—				
Other charges	600	80 14 11	2,226 13 2	2,307 12 1
Cost of acquiring land	..	120 0 0	1,72,118 13 8	1,72,247 13 8
Engineering works	500	175 4 0	47,001 7 2	47,176 11 2
	1,100	385 2 11	2,21,347 2 0	2,21,732 4 11
Scheme No. XXX—				
Street lighting	..	....	228 6 2	228 6 2
Street watering	..	....	24 1 5	24 1 5
	..	....	252 7 7	252 7 7
Scheme No. XXXA—				
Preliminary expenses	..	....	44 0 0	44 0 0
Scheme No. XXXI—(Chowringhee Place, Mati Seal Street Widening)—				
Other charges	100	..	6,395 3 9	6,395 3 9
Cost of acquiring land	..	40 0 0	6,84,178 3 4	6,84,218 3 4
Engineering works	500	..	33,063 9 6	33,063 9 6
	600	40 0 0	7,23,637 0 7	7,23,677 0 7
Scheme No. XXXII—(Banstola Street Widening)—				
Other charges	..	....	265 14 0	265 14 0
Cost of acquiring land	..	....	39,294 12 0	39,294 12 0
Engineering works	..	....	953 0 0	953 0 0
	..	....	40,513 10 0	40,513 10 0
Carried over ..	3,34,642	5,50,034 6 8	11,08,65,883 4 2	11,14,15,917 10 10

Capital Account—(Expenditure)—*continued.*

Expenditure.	Budget for 1935-36.	Actuals for 1935-36.	Actuals to 31st March 1935.	Actuals to 31st March 1936.
	Rs.	Rs. a. p.	Rs. a. p.	Rs. a. p.
Brought forward ..	3,34,642	5,50,034 6 8	11,08,65,883 4 2	11,14,15,917 10 10
Scheme No. XXXIII—(Southern Avenue)—1st Section—				
Auctioneer's fees	2,000	3,647 13 5	1,624 5 8	5,272 3 1
Advertisement, etc.	100	57 2 5	667 8 6	724 10 11
Cost of acquiring land	1,00,000	92,253 14 11	38,24,204 3 9	39,16,458 2 8
Cost of survey	..	1,320 11 9	956 7 0	2,277 2 9
Conservancy	..	1,658 12 0	516 14 0	2,175 10 0
Street watering	..	426 14 0	18 10 0	445 8 0
Street lighting	..	1,544 8 9	256 15 3	1,801 8 0
Telephone	..	260 11 0	463 1 6	723 12 6
Engineering works	2,00,000	....	....	....
Road construction, etc. ..	..	1,87,418 0 10	1,90,130 9 1	3,77,548 9 11
Tank-filling, etc.	..	10,251 5 0	2,03,000 8 0	2,13,251 13 0
Miscellaneous	..	1,100 3 3	576 6 6	1,676 9 9
Contingencies	..	2,222 15 3	3,607 14 6	5,830 13 9
Earth removal	..	677 5 6	3,340 6 9	4,017 12 3
Water supply	..	55,121 14 3	12,767 14 9	67,889 13 0
Lighting	..	14,874 3 3	873 4 2	15,747 7 5
Alteration to electric poles ..	..	3,714 14 3	421 1 1	4,135 15 4
Earth excavation	..	17 4 0	21,845 7 3	21,862 11 3
Tree planting	..	1,252 0 2	3,420 3 3	4,672 3 5
Park construction	..	630 6 3	..	630 6 3
	3,02,100	3,78,451 0 3	42,68,691 13 0	46,47,142 13 3
Scheme No. XXXIV—(Mission Row)—				
Other charges	..	....	2,846 5 6	2,846 5 6
Cost of land	..	....	34,485 0 3	34,485 0 3
Engineering works	..	....	20,859 12 11	20,859 12 11
	..	....	58,191 2 8	58,191 2 8
Scheme No. XXXV—(Gorachand Road Area)—				
Auctioneer's fees	5,000	395 6 6	....	395 6 6
Preliminary expenses	100	....	502 9 11	502 9 11
Cost of survey ..	..	10 14 0	86 10 0	97 8 0
Cost of acquiring land	10,00,000	13,20,399 8 8	40 0 0	13,20,439 8 8
Engineering works	1,000	....	....	....
Miscellaneous	..	1 13 6	12 11 8	14 9 2
Road construction, etc.	..	631 8 7	492 10 0	1,124 2 7
Lighting	..	....	12 8 0	12 8 0
Earth removal	..	187 0 0	185 6 0	372 6 0
Tank filling	..	60 0 0	....	60 0 0
	10,06,100	13,21,686 3 3	1,332 7 7	13,23,018 10 10
Scheme No. XXXVII—(Chittaranjan Avenue-Shambazar)—				
Conservancy	..	682 8 0	....	682 8 0
Maintenance	..	341 4 0	....	341 4 0
Cost of survey	..	483 13 9	51 6 5	535 4 2
Advertisement, etc.	100	..	794 11 6	794 11 6
Auctioneer's fees	1,000	1,214 6 6	3,301 0 3	4,515 6 9
Cost of acquiring land	5,00,000	4,35,006 4 7	32,83,545 12 0	37,18,552 0 7
Telephone	..	274 15 0	178 12 11	453 11 11
Engineering works	1,00,000	....	....	....
Road construction, etc.	..	76,244 12 5	11,444 15 6	87,689 11 11
Water supply	..	16,829 3 6	237 15 3	17,067 2 9
Lighting	..	264 2 0	10 10 6	274 12 6
Miscellaneous petty items ..	..	150 7 2	8 12 5	159 3 7
Tree planting	..	1 6 0	....	1 6 0
Alteration to electric cables ..	..	29 12 7	....	29 12 7
Contingencies	..	135 0 0	....	135 0 0
	6,01,100	5,31,657 15 6	32,99,574 0 9	38,31,232 0 3
Carried over ..	22,43,942	27,81,829 9 8	11,84,93,672 12 2	12,12,75,502 5 10

Capital Account—(Expenditure)—*continued.*

Expenditure.	Budget for 1935-36.	Actuals for 1935-36.	Actuals to 31st March 1935	Actuals to 31st March 1936.
	Rs.	Rs. a. p.	Rs. a. p.	Rs. a. p.
Brought forward ..	22,43,942	27,81,829 9 8	11,84,93,672 12 2	12,12,75,502 5 10
Scheme No. XXXVIII—(Mission Row to Chittaranjan Avenue)—				
Advertisement, etc.	100	....	542 3 0	542 3 0
Auctioneer's fees	500	510 15 9	5,718 15 0	6,229 14 9
Cost of acquiring land	..	36,857 14 11	51,83,623 9 10	52,20,481 8 9
Cost of survey	..	180 1 6	46 8 2	226 9 8
Conservancy	..	1,103 7 0	....	1,103 7 0
Street watering	..	445 10 0	....	445 10 0
Maintenance	..	763 11 3	....	763 11 3
Telephone	..	310 12 0	....	310 12 0
Engineering works	1,00,000	....	....	.
Road construction, etc.	..	95,738 10 1	6,493 5 7	1,02,231 15 8
Water supply	..	24,225 8 4	8 2 0	24,233 10 4
Miscellaneous	..	2,726 6 3	48 5 3	2,774 11 6
Lighting	..	798 15 0	....	798 15 0
	1,00,600	1,63,662 0 1	51,96,481 0 10	53,60,143 0 11
Scheme No. XXXIX—				
Preliminary expenses	..	....	171 4 0	171 4 0
Scheme No. XL—				
Advertisement, etc.	500	....	469 6 0	469 6 0
Auctioneer's fees	1,000	....	....	....
Cost of acquiring land	4,00,000	89,468 9 0	....	89,468 9 0
	4,01,500	89,468 9 0	469 6 0	89,937 15 0
Scheme No. XLI—				
Advertisement, etc.	..	....	522 6 9	522 6 9
Cost of survey	..	7 14 0	....	7 14 0
	....	7 14 0	522 6 9	530 4 9
Scheme No. XLII—(Widening and Extension of Kalakar Street)—				
Cost of survey	..	5 4 6	....	5 4 6
Advertisement, etc.	100	....	600 2 3	600 2 3
Auctioneer's fees	5,000	4,244 8 9	....	4,244 8 9
Cost of acquiring land	35,00,000	45,68,064 14 0	18,10,997 3 5	63,79,062 1 5
Engineering works	10,000	3,584 2 9	....	3,584 2 9
	35,15,100	45,75,898 14 0	18,11,597 5 8	63,87,496 3 8
Scheme No. XLIII—(Darmahatta Street Widening)—				
Advertisement, etc.	100	....	409 8 9	409 8 9
Auctioneer's fees	500	82 0 0	....	82 0 0
Cost of acquiring land	3,00,000	1,36,145 14 7	1,54,171 15 5	2,90,317 14 0
Engineering works	10,000	....	....	....
	3,10,600	1,36,227 14 7	1,54,581 8 2	2,90,809 6 9
Scheme No. XLIV—				
Advertisement, etc.	..	541 7 0	578 7 3	1,119 14 3
Engineering works	..	13 8 9	....	13 8 9
	..	554 15 9	578 7 3	1,133 7 0
Scheme No. XLV—				
Advertisement, etc.	..	712 11 0	592 6 4	1,305 1 4
Cost of survey	..	0 6 0	....	0 6 0
	..	713 1 0	592 6 4	1,305 7 4
Carried over ..	65,71,742	77,48,362 14 1	12,56,58,666 7 2	13,34,07,029 7 3

Capital Account—(Expenditure)—*continued.*

Expenditure.	Budget for 1935-36.	Actuals for 1935-36.	Actuals to 31st March 1935.	Actuals to 31st March 1936.
	Rs.	Rs. a. p.	Rs. a. p.	Rs. a. p.
Brought forward ..	65,71,742	77,48,362 14 1	12,56,58,666 9 2	13,34,07,029 7 3
Scheme No. XLVI—				
Advertisement, etc.	..	474 4 9	....	474 4 9
Scheme No. XLVII—				
Advertisement, etc.	..	582 11 3	....	582 11 3
Rehousing Scheme No. 1—				
Cost of acquiring land	..	....	72,371 4 3	72,371 4 3
Engineering works	..	....	1,72,072 1 10	1,72,072 1 10
Other charges	..	....	10,007 12 6	10,007 12 6
	..	....	2,54,451 2 7	2,54,451 2 7
Excavation area—				
Street lighting	..	2,772 15 5	20,740 13 0	23,513 12 5
Maintenance	..	....	8,461 1 9	8,461 1 9
Auctioneer's fees	..	....	337 15 2	337 15 2
Street watering	..	29 5 0	2,210 7 3	2,239 12 3
Cost of survey	..	10 0 0	1,255 1 10	1,265 1 10
Cost of acquiring land	..	....	5,82,627 1 9	5,82,627 1 9
Conservancy	..	....	4,505 3 6	4,505 3 6
Engineering works ..	10,000	....	....	....
Tank-filling and land raising ..	..	42 3 9	1,24,592 13 3	1,24,635 1 0
Earth removal, etc.	..	271 10 3	3,79,801 13 6	3,80,073 7 9
Waterworks	..	160 6 0	7,372 10 8	7,533 0 8
Road construction, drainage and ..				
sewerage	....	3,081 4 1	1,03,006 7 0	1,06,087 11 1
Contingencies ..	..	21 8 0	60,321 4 5	60,342 12 5
Electric fittings ..	..	271 0 0	10 14 10	281 14 10
Lay-out of the park	..	852 0 0	13,072 6 3	13,924 6 3
Lighting—gas and electric ..	..	....	23,270 4 5	23,270 4 5
Miscellaneous petty works ..	..	718 2 0	16,868 10 3	17,586 12 3
Foot bridge	..	....	11,229 3 6	11,229 3 6
Tree planting	..	43 3 5	3,476 7 4	3,519 10 9
Temporary establishment ..	..	....	5,236 14 3	5,236 14 3
	10,000	8,273 9 11	13,68,397 9 11	13,76,671 3 10
Bow Street rehousing—				
Cost of acquiring land	..	69 0 0	7,67,082 8 9	7,67,151 8 9
Engineering works ..	..	....	6,34,052 13 3	6,34,052 13 3
Other charges	..	....	15,509 4 7	15,509 4 7
	..	69 0 0	14,16,644 10 7	14,16,713 10 7
Rehousing at Paikpara—				
Cost of acquiring land	..	136 0 0	7,31,916 7 4	7,32,052 7 4
Engineering works ..	..	....	1,12,961 6 9	1,12,961 6 9
Other charges	..	189 15 3	4,377 5 0	4,567 4 3
	..	325 15 3	8,49,255 3 1	8,49,581 2 4
Rehousing Kerbala Tank Lane—				
Cost of acquiring land	..	....	2,47,233 3 4	2,47,233 3 4
Engineering works	..	....	5,78,817 10 3	5,78,817 10 3
Other charges ..	..	....	3,787 12 8	3,787 12 8
	..	....	8,29,838 10 3	8,29,838 10 3
Rehousing at Maniktala Bustee, Site No. I—				
Cost of acquiring land	..	....	2,46,459 15 6	2,46,459 15 6
Engineering works	..	....	28,325 6 1	28,325 6 1
Other charges	..	222 12 3	3,758 2 1	3,980 14 4
..	..	222 12 3	2,78,543 7 8	2,78,766 3 11
Carried over ..	65,81,742	77,58,311 3 6	13,06,55,797 5 3	13,84,14,108 8 9

Capital Account—(Expenditure)—*continued.*

Expenditure.	Budget for 1935 36	Actuals for 1935 36	Actuals to 31st March 1935.	Actuals to 31st March 1936.
	Rs	Rs. a. p	Rs. a. p.	Rs. a. p.
Brought forward ..	65,81,742	77,58,311 3 6	13,06,55,797 5 3	13,84,14,108 8 9
Rehousing at Maniktala Bustee, Site No II—				
Other charges	..	....	668 9 9	668 9 9
Cost of acquiring land	..	....	2,82,273 4 5	2,82,273 4 5
Engineering works ..	..	....	40 0 0	40 0 0
	..	....	2,82,981 14 2	2,82,981 14 2
Busti Rehousing—Christopher Road—				
Cost of survey	..	87 11 0	66 8 0	154 3 0
Cost of acquiring land	..	186 15 7	3,15,742 14 2	3,15,929 13 9
Auctioneer's fees	100	....	227 11 9	227 11 9
Engineering works	50,000	3,018 3 4	8,364 12 9	11,383 0 1
	50,100	3,292 13 11	3,24,401 14 8	3,27,694 12 7
Bridges—Hastings—				
Engineering works	..	....	165 8 0	165 8 0
Bridges—Dum-Dum—				
Other charges ..	..	....	1,373 15 1	1,373 15 1
Engineering works	4,768	....	6,56,182 3 10	6,56,182 3 10
Cost of land ..	..	....	12,616 1 4	12,616 1 4
	4,768	....	6,70,172 4 3	6,70,172 4 3
Bridges—Kidderpore—				
Engineering works	..	....	2,38,590 12 6	2,38,590 12 6
Bridges—Chitpore—				
Cost of survey	..	....	20 1 1	20 1 1
Engineering works	11,000	2,528 5 11	1,91,854 13 2	1,94,383 3 1
	11,000	2,528 5 11	1,91,874 14 3	1,94,403 4 2
Bridges—Maniktala—				
Engineering Works	1,000	....	5,92,318 11 0	5,92,318 11 0
Bridges—Alipore—				
Engineering works	6,000	2,953 2 5	3,39,798 3 4	3,42,751 5 9
Cost of survey	..	....	27 13 1	27 13 1
Auctioneer's fees	..	....	1 6 3	1 6 3
	6,000	2,953 2 5	3,39,827 6 8	3,42,780 9 1
Bridges—Beliaghata—				
Cost of survey	..	....	16 4 0	16 4 0
Engineering works	1,000	....	5,27,304 13 10	5,27,304 13 10
Cost of land	..	....	218 12 0	218 12 0
	1,000	....	5,27,539 13 10	5,27,539 13 10
Bridges—Narkeldanga—				
Cost of survey	..	....	10 14 0	10 14 0
Cost of land	..	....	1,685 0 0	1,685 0 0
Engineering works	1,000	....	5,22,905 2 8	5,22,905 2 8
Total ..	1,000	....	5,24,601 0 8	5,24,601 0 8
Carried over ..	66,56,610	77,67,085 9 9	13,43,48,271 9 3	14,21,15,357 3 0

Capital Account—(Expenditure)—*continued.*

Expenditure.	Budget for 1935-36.	Actuals for 1935-36.	Actuals to 31st March 1935.	Actuals to 31st March 1936.
	Rs.	Rs. a. p.	Rs. a. p.	Rs. a. p.
Brought forward ..	66,56,610	77,67,085 9 9	13,43,48,271 9 3	14,21,15,357 3 0
Bridges—Tollygunge—				
Engineering works ..	1,10,000	42,436 10 2	45,612 15 10	88,049 10 0
Bridges—Barrackpore—				
Engineering works	..	0 8 0	....	0 8 0
Widening Chowringhee Road between Elgin Road and Circular Road—				
Cost of acquiring land	..	....	92,000 0 0	92,000 0 0
Other items ..	..	....	445 14 10	445 14 10
Engineering works	..	....	42,259 3 5	42,259 3 5
	..	....	1,34,705 2 3	1,34,705 2 3
Burrabazar Improvement Scheme No. I—(S. W. Section)—				
Preliminary expenses ..	..	....	812 12 0	812 12 0
Maniktala Improvement Scheme No. I—(Maniktala Bridge Approaches)—				
Maintenance	..	9 1 0	....	9 1 0
Street watering	..	478 5 1	2,594 4 0	3,072 9 1
Conservancy	..	2,058 12 0	7,569 1 0	9,627 13 0
Street lighting	..	3,033 0 0	7,563 13 10	10,596 13 10
Auctioneer's fees	250	362 14 9	1,588 11 9	1,951 10 6
Telephone	..	73 11 0	747 13 10	821 8 10
Advertisement, etc.	100	69 9 3	870 0 1	939 9 4
Cost of survey	..	106 11 0	632 9 7	739 4 7
Cost of acquiring land	..	1,048 14 0	8,74,432 9 7	8,75,481 7 7
Engineering works	10,000	..	....	....
Road construction, etc.	..	3,486 2 11	1,46,530 5 9	1,50,016 8 8
Waterworks	..	324 3 7	24,350 12 4	24,674 15 11
Miscellaneous	..	150 11 2	4,253 3 8	4,403 14 5
Contingencies	.	143 12 3	889 1 7	1,032 13 10
Lighting	..	0 15 6	11,761 14 9	11,762 14 3
Earth removal	..	....	876 11 0	876 11 0
Shifting electric cables	..	....	2,975 8 0	2,975 8 0
Tree planting	..	96 0 0	335 12 0	431 12 0
	10,350	11,442 11 6	10,87,972 4 4	10,99,414 15 10
Maniktala Improvement Scheme No. II—(Beliaghata Bridge Approaches)—				
Street watering	..	474 4 10	995 0 3	1,469 5 1
Telephone	..	....	237 15 0	237 15 0
Maintenance	..	33 8 0	177 8 0	211 0 0
Auctioneer's fees	500	284 1 9	748 6 6	1,032 8 3
Cost of survey	..	92 12 0	370 15 4	463 11 4
Advertisement, etc.	100	70 14 11	584 13 8	655 12 7
Cost of acquiring land	..	2,673 12 9	7,50,971 4 3	7,53,645 1 0
Conservancy	..	915 0 0	1,997 8 0	2,912 8 0
Street lighting	..	2,193 4 8	1,338 10 3	3,531 14 11
Engineering works	10,000	....	....	....
Lighting	..	21,024 5 8	2,839 2 0	23,863 7 8
Road construction, etc.	..	....	85,495 3 6	85,495 3 6
Contingencies	..	305 12 6	924 6 0	1,230 2 6
Waterworks	..	155 5 9	10,910 4 6	11,065 10 3
Miscellaneous	..	119 13 1	1,375 2 8	1,494 15 9
Earth removal	..	....	4,407 3 0	4,407 3 0
Shifting electric cables	..	197 15 0	595 13 3	793 12 3
Tank-filling	..	....	111 1 0	111 1 0
Tree planting	..	56 9 0	17 13 0	74 6 0
	10,600	28,597 7 11	8,64,098 2 2	8,92,695 10 1
Scheme No. IM—(Alteration)—				
Cost of acquiring land	..	61,500 0 0	....	61,500 0 0
Carried over ..	67,87,560	79,11,062 15 4	13,64,81,472 13 10	14,43,92,535 13 2

Capital Account—(Expenditure)—*continued.*

Expenditure.	Budget for 1935-36.	Actuals for 1935-36.	Actuals to 31st March 1935.	Actuals to 31st March 1936.
	Rs.	Rs. a. p.	Rs. a. p.	Rs. a. p.
Brought forward ..	67,87,560	79,11,062 15 4	13,64,81,472 13 10	14,43,92,535 13 2
Maniktala Improvement Scheme No. III—(Narkeldanga Bridge Approaches)—				
Telephone	..	153 4 0	....	153 4 0
Maintenance	..	112 8 0	....	112 8 0
Street lighting	..	21 0 0	264 0 0	285 0 0
Advertisement, etc.	100	1 5 8	477 1 0	478 6 8
Auctioneer's fees	8,000	641 9 0	579 3 3	1,220 12 3
Conservancy	..	850 12 0	909 6 0	1,760 2 0
Street watering	..	154 3 7	36 2 0	190 5 7
Cost of survey	..	358 4 0	38 4 0	396 8 0
Cost of acquiring land	2,00,000	3,19,557 9 10	7,48,954 8 9	10,68,512 2 7
Engineering works	75,000	....	....	....
Shifting fire alarm	..	....	125 0 6	125 0 6
Road construction, etc.	..	48,059 4 11	792 8 9	48,851 13 8
Miscellaneous petty establishment ..	..	158 1 11	319 8 7	477 10 6
Lighting	..	125 7 9	15 0 0	140 7 9
Waterworks	..	7,318 13 8	10 12 6	7,329 10 2
Contingencies	..	179 14 0	25 8 0	205 6 0
Tree planting	..	75 0 0	....	75 0 0
Tank-filling	..	426 4 0	....	426 4 0
	2,83,100	3,78,193 6 4	7,52,546 15 4	11,30,740 5 8
Howrah Improvement—				
Advertisement, etc.	..	56 12 0	....	56 12 0
Works in completed schemes and sanctioned alignments	2,000	....	....	....
Store-yard, Entally—				
Auctioneer's fees	..	....	3 4 0	3 4 0
Cost of acquiring land	..	....	81,246 15 4	81,246 15 4
Engineering works	500	26 12 8	25,312 0 9	25,338 13 5
	500	26 12 8	1,06,562 4 1	1,06,589 0 9
Store-yard in South Calcutta—				
Engineering works	500	91 14 0	6,480 15 7	6,572 13 7
Cossipore-Chitpore Open Space—				
Street watering	..	....	244 13 8	244 13 8
Street lighting	..	*Cr.* 2 15 5	5,302 12 11	5,299 13 6
Auctioneer's fees	..	....	1,589 1 6	1,589 1 6
Advertisement, etc.	..	....	573 0 11	573 0 14
Cost of survey	..	7 15 6	1,132 5 10	1,140 5 1
Conservancy	..	....	17,297 6 0	17,297 6 0
Cost of acquiring land	..	212 0 0	49,54,318 0 7	49,54,530 0 7
Maintenance	..	....	6,037 12 10	6,037 12 10
Engineering works	26,995	....	....	....
Tank-filling	..	598 7 0	3,53,616 4 11	3,54,214 11 11
Contingencies	..	....	20,711 8 8	20,711 8 8
Arboriculture	..	357 1 0	5,090 13 9	5,447 14 9
Road construction, drainage and sewerage.	..	6,584 7 7	1,41,854 15 9	1,48,439 7 4
Fencing gates	..	....	30,866 1 3	30,866 1 3
Public convenience	..	....	4,632 13 0	4,632 13 0
Lighting—gas and electric ..	..	....	946 10 6	946 10 6
Earth removal	..	661 13 3	3,765 0 3	4,426 13 6
Park construction	..	768 14 6	60,680 8 3	61,449 6 9
Miscellaneous	..	74 11 5	3,880 7 0	3,955 2 5
Waterworks	..	4 4 3	4,192 15 10	4,197 4 1
Shelter	..	....	3,235 10 6	3,235 10 6
Electric main	..	....	696 3 3	696 3 3
Maintenance	..	....	324 14 0	324 14 0
	26,995	9,266 11 1	56,20,990 5 2	56,30,257 0 3
Ram Kisson Das Square—				
Other charges	..	....	711 1 9	711 1 9
Cost of acquiring land	..	....	1,30,006 6 6	1,30,006 6 6
Engineering works	..	....	26,060 2 5	26,060 2 5
	..	....	1,56,777 10 8	1,56,777 10 8
Carried over ..	71,00,655	82,98,698 7 5	14,31,24,831 0 8	15,14,23,529 8 1

Capital Account—(Expenditure)—*continued.*

Expenditure.	Budget for 1935-36.	Actuals for 1935-36.	Actuals to 31st March 1935.	Actuals to 31st March 1936.
	Rs.	Rs. a. p.	Rs. a. p.	Rs. a. p.
Brought forward ..	71,00,655	82,98,698 7 5	14,31,24,831 0 8	15,14,23,529 8 1
Open Space—Amherst Street—				
Other items	..	....	494 7 0	494 7 0
Acquisition of almshouse ..	..	....	2,88,800 0 0	2,88,800 0 0
Engineering works	..	....	31,507 1 4	31,507 1 4
	..	....	3,20,801 8 4	3,20,801 8 4
Open Space at Ratan Sarkar Garden Street—				
Other items	..	....	1,701 7 5	1,701 7 5
Cost of acquiring land	..	....	3,23,778 9 8	3,23,778 9 8
Engineering works	..	....	30,611 6 8	30,611 6 8
	..	....	3,56,091 7 9	3,56,091 7 9
Gariahat Road Sewer—				
Engineering works	..	..	9,124 9 3	9,124 9 3
Bhowanipore Storm Water Relief Sewer—				
Engineering works	..	....	1,41,811 9 5	1,41,811 9 5
Cost of land acquisition office ..	1,17,000	1,20,378 2 1	19,16,642 8 1	20,37,020 10 2
Tools and plant	25,000	*Cr.* 93,328 7 6	388,265 2 2	2,94,936 10 8
Government surveys	..	523 10 8	3,39,922 12 8	3,40,446 7 4
Stores appropriated for workshop ..	2,000	*Cr.* 633 3 5	21,799 14 1	21,166 10 8
Tree planting	..	....	237 5 0	237 5 0
Nursery for plant	100	1 12 5	3,936 7 9	3,938 4 2
	27,100	*Cr.* 93,436 3 10	7,54,161 9 8	6,60,725 5 10
Tribunal awards on older schemes ..	2,00,000	....	....	....
New Schemes for sanction during the year—				
Preliminary expenses	2,000	....	....	....
For all schemes—				
Street lighting ..	40,000	....	....	....
Street watering	4,000	....	....	....
Conservancy	20,000	....	....	....
Maintenance	2,000	..	....	....
Telephone	1,500	....	....	....
Survey	1,500	....	....	....
	69,000	....	....	....
Set-backs in Published Alignments— ..	3,00,000	....	....	....
Street Alignment No. I—				
Auctioneer's fees	..	....	11 0 0	11 0 0
Cost of acquiring land	..	....	67,984 11 4	67,984 11 4
	..	....	67,995 11 4	67,995 11 4
Street Alignment No. II—				
Improvement of land	..	....	2,600 0 0	2,600 0 0
Cost of acquiring land	..	993 10 0	4,22,362 0 3	4,23,355 10 3
Auctioneer's fees	..	64 6 6	590 12 9	655 3 3
Engineering Works	..	532 9 3	259 3 3	791 12 6
	..	1,590 9 9	4,25,812 0 3	4,27,402 10 0
Street Alignment No. III—				
Kamardanga Bridge	..	....	33,399 0 0	33,399 0 0
Cost of acquiring land	..	....	3,795 8 10	3,795 8 10
	..	..	37,194 8 10	37,194 8 10
Street Alignment No. V—				
Cost of acquiring land	..	42,931 14 1	1,10,152 0 5	1,53,083 14 6
Carried over ..	78,15,75[illegible]	83,70,162 13 6	14,72,64,618 10 0	15,56,34,781 7 6

Capital Account—(Expenditure)—*continued.*

Expenditure.	Budget for 1935-36.	Actuals for 1935-36.	Actuals to 31st March 1935.	Actuals to 31st March 1936.
	Rs.	Rs. a. p.	Rs. a. p.	Rs. a. p.
Brought forward ..	78,15,755	83,70,162 13 6	14,72,64,618 10 0	15,56,34,781 7 6
Street Alignment No. VI—				
Cost of acquiring land	..	55,488 3 2	3,64,870 2 5	4,20,358 5 7
Auctioneer's fees	..	....	22 8 5	22 8 5
	..	55,488 3 2	3,64,892 10 10	4,20,380 14 0
Street Alignment No. VII—				
Cost of acquiring land	..	....	21,916 8 9	21,916 8 9
Street Alignment No. VIII—				
Cost of acquiring land	..	0 6 3	13,471 8 1	13,471 14 4
Auctioneer's fees	..	....	20 0 0	20 0 0
	..	0 6 3	13,491 8 1	13,491 14 4
Street Alignment No. IX—				
Cost of acquiring land	..	13,435 6 4	4,05,515 13 9	4,18,951 4 1
Auctioneer's fees	..	4 5 9	83 9 7	87 15 4
	..	13,439 12 1	4,05,599 7 4	4,19,039 3 5
Street Alignment No. X—				
Cost of acquiring land	..	....	1,66,508 7 1	1,66,503 7 1
Auctioneer's fees	..	....	700 0 0	700 0 0
	..	....	1,67,203 7 1	1,67,203 7 1
Street Alignment No. XI—				
Cost of acquiring land	..	....	1,68,795 5 9	1,68,795 5 9
Auctioneer's fees	..	....	61 0 0	61 0 0
	..	....	1,68,856 5 9	1,68,856 5 9
Street Alignment No. XII—				
Cost of acquiring land	..	....	2,20,561 8 11	2,20,561 8 11
Auctioneer's fees	..	....	18 0 0	18 0 0
	..	....	2,20,579 8 11	2,20,579 8 11
Street Alignment No. XIII—				
Cost of acquiring land	..	8 0 0	1,77,038 10 10	1,77,046 10 10
Auctioneer's fees	..	....	21 0 0	21 0 0
	..	8 0 0	1,77,059 10 10	1,77,067 10 10
Street Alignment No. XIV—				
Cost of acquiring land	..	..	34,607 5 10	34,607 5 10
Street Alignment No. XVI—				
Cost of acquiring land	..	..	5,90,968 10 4	5,90,968 10 4
Auctioneer's fees	..	..	39 9 6	39 9 6
	..	....	5,91,008 3 10	5,91,008 3 10
Street Alignment No. XVIII—				
Cost of acquiring land	..	..	13,000 0 0	13,000 0 0
Auctioneer's fees	..	24 0 0	....	24 0 0
	..	24 0 0	13,000 0 0	13,024 0 0
Street Alignment No. XIX—				
Engineering works	..	..	369 11 6	369 11 6
Cost of acquiring land	..	..	2,825 0 0	2,825 0 0
	..	..	3,194 11 6	3,194 11 6
Street Alignment No. XX—				
Auctioneer's fees	..	..	7 0 9	7 0 9
Cost of acquiring land	..	..	3,64,634 6 7	3,64,634 6 7
	..	..	3,64,641 7 4	3,64,641 7 4
Carried over ..	78,15,755	84,39,123 3 0	14,98,10,669 10 1	15,82,49,792 13 1

Capital Account—(Expenditure)—*concluded.*

Expenditure.	Budget for 1935-36.	Actuals for 1935-36.	Actuals to 31st March 1935.	Actuals to 31st March 1936.
	Rs.	Rs. a. p.	Rs. a. p.	Rs. a. p.
Brought forward ..	78,15,755	84,39,123 3 0	14,98,10,669 10 1	15,82,49,792 13 1
Street Alignment No. XXI—				
Cost of acquiring land ..	..	..	12,231 7 2	12,231 7 2
Street Alignment No. XXIII—				
Cost of acquiring land	..	..	5,000 0 0	5,000 0 0
Street Alignment No. XXVI—				
Cost of acquiring land	..	4 0 0	35,980 7 0	35,984 7 0
Auctioneer's fees	..	..	33 0 0	33 0 0
	..	4 0 0	36,013 7 0	36,017 7 0
Street Alignment No. XXVII—				
Cost of acquiring land	..	..	1,628 7 0	1,628 7 0
Auctioneer's fees	..	..	188 0 0	188 0 0
Street Alignment No. XXVII—	..	..	1,816 7 0	1,816 7 0
Cost of acquiring land	..	5,197 4 8	2,77,007 12 10	2,82,205 1 6
Street Alignment No. XXXI—				
Cost of land	..	19,302 9 3	..	19,302 9 3
Street Alignment No. XXXIV—				
Cost of acquiring land	..	..	1,278 8 0	1,278 8 0
Auctioneer's fees	..	..	1 1 3	1 1 3
	..	..	1,279 9 3	1,279 9 3
Street Alignment No. XXXVI—				
Cost of land	..	4 0 0	..	4 0 0
Street Alignment No XL—				
Cost of land	..	78 0 0	2,59,821 12 4	2,59,899 12 4
Street Alignment No. XLI—				
Cost of land	..	..	1,42,004 4 1	1,42,004 4 1
Auctioneer's fees	..	0 3 3	..	0 3 3
	..	0 3 3	1,42,004 4 1	1,42,004 7 4
Street Alignment No. XLV—				
Cost of acquiring land	..	..	20,548 0 0	20,548 0 0
Auctioneer's fees	..	..	74 0 0	74 0 0
	..	..	20,622 0 0	20,622 0 0
Street Alignment No. XLVII—				
Cost of acquiring land	..	..	4,607 10 10	4,607 10 10
Barrabazar Alignment No. I—				
Cost of land	..	..	29,250 0 0	29,250 0 0
Barrabazar Alignment No. II—				
Cost of land	..	..	73,743 12 0	73,743 12 0
Street Alignment IIM—				
Cost of land	..	..	21,581 9 10	21,581 9 10
Auctioneer's fees	..	..	44 2 6	44 2 6
	..	..	21,625 12 4	21,625 12 4
Street Alignment No. VM—				
Cost of acquiring land	..	..	64,381 13 7	64,381 13 7
GRAND TOTAL ..	78,15,755	84,63,709 4 2	15,07,60,075 6 6	15,92,23,784 10 8

Revenue Account—Statement of Income and Expenditure.

Income.

Receipts.	Budget for 1935-36.	Actuals for 1935-36.
	Rs.	Rs. a. p.
Opening Balance	..	5,12,90,976 5 0
A. Under section 124 (*a*)—		
Interest under section 78.		
Interest on exemption fees—		
Scheme No.—		
I		598 0 0
IC		5,096 0 0
II		46 0 0
IIA		722 8 0
IV		2,759 4 9
IVA		1,637 7 0
V		8,888 8 7
VII		7,407 1 6
VIICS		6,516 0 0
VIIA		3,239 8 0
VIIB	60,000	1,283 0 0
VIIC		3,499 0 0
VIIG		198 0 0
VIII		4,910 0 1
VIIIA		12,187 4 0
XI		1,678 0 0
XVA		124 6 5
XVB		322 8 7
XXXVII		582 2 3
	60,000	61,694 11 2
B. Under section 124 (*b*)—		
(*a*) Duty on transfer of property	5,50,000	5,30,709 4 0
(*b*) Terminal tax	2,00,000	2,31,055 5 6
(*c*) Duty on jute	9,50,000	11,37,318 8 0
	17,00,000	18,99,083 1 6
C. Under section 124 (*c*)—		
Municipal contribution	20,02,000	19,79,752 11 11
D. Under section 124 (*e*)—		
Government Grant	1,50,000	1,50,000 0 0
Carried over ..	39,12,000	40,90,530 8 7

Revenue Account—(Income)—*continued*

Receipts.	Budget for 1935-36.	Actuals for 1935-36.
	Rs.	Rs. a. p.
Brought forward	39,12,000	40,90,530 8 7
E. Under section 124 (*g*)—		
Rent Scheme No.—		
I		61 0 0
IC		86 0 0
VIIC		84 8 0
VIID		6,110 3 0
VIIE		6,646 10 0
VIIF		6 4 0
VIIG		896 9 6
VIIH		3,538 1 7
VIIJ		3,488 0 6
VIII		59 6 0
VIIIA		24 6 0
VIIIC	60,000	59 9 0
XVA		254 12 9
XVB		406 9 6
XVC		61 11 0
XVD		483 0 0
XVI		6,248 12 0
XXII		143 14 0
XXVI		155 8 0
XXVII		423 12 0
XXXIII		8,953 2 3
XXXVII		2,224 1 6
Rent Scheme No.—		
XXXVIII		5,046 8 6
XLII		299 4 0
IM		794 1 6
IIM		63 12 0
IIIM		5,938 5 6
Excavation area		96 0 0
Cossipore-Chitpore O. S.		3,098 5 0
Bow Street Rehousing	28,000	26,294 9 0
Rehousing Scheme I	13,000	14,305 0 0
Rent Street, Alignment No.—		
II		432 0 0
V		3,747 14 6
VI		1,625 0 0
VII		600 0 0
IX		2,498 0 0
XI		5,196 0 0
XVI		1,474 0 0
XXVI		8 6 0
XXVIII		44 15 3
VM		1,130 0 0
Rehousing at M. B. S. No. I		120 0 0
Total ..	1,01,000	1,13,227 13 10
Carried over ..	40,13,000	42,03,758 6 5

Revenue Account—(Income)—*continued.*

Receipts.	Budget for 1935-36.	Actuals for 1935-36.
	Rs.	Rs. a. p.
Brought forward ..	40,13,000	42,03,758 6 5
Rent on leasehold—		
Scheme No.—		
I		1,678 0 0
II		2,021 0 0
V		260 6 0
VII		1,351 8 0
VIICS		12 0 0
VIID		3,165 12 0
VIIG	25,000	50 0 0
VIII		6,757 8 0
VIIIC		9,030 0 0
XVB		4,150 0 0
XVI		382 13 9
Rehousing at M. B. S. No. I		300 0 0
Excavation Area		72 0 0
	25,000	29,230 15 9
Rent charges—		
Scheme No.—		
I		12,995 4 0
I Alt.		2,726 8 0
IC		2,692 0 0
II		176 2 6
IIA		285 8 0
IV		2,541 5 0
IVA		23,975 4 5
V		12,698 14 10
VII		5,206 1 3
VIIA		340 0 0
VIIB		4,124 5 6
VIIC		24,246 5 6
VIID		8,831 14 0
VIIE		32,594 9 4
VIIF		9,455 12 4
VIIG		3,260 2 7
VIIH	3,75,000	7,969 5 3
VIIJ		3,548 3 10
VIICS		5,552 7 4
VIII		27,537 8 7
VIIIA		16,997 2 6
VIIIC		16,678 13 0
XI		880 13 9
XVA		9,581 15 2
XVB		64,284 3 3
XVC		7,312 3 8
XVD		8,058 1 11
XVI		13,380 11 5
XVIA		2,557 11 10
XVII		1,646 6 6
XX		1,457 3 1
XXII		3,891 6 6
XXVI		3,868 14 9
Carried over ..	3,75,000	3,41,353 5 7
Carried over ..	40,38,000	42,32,989 6 2

Revenue Account—(Income)—*concluded.*

Receipts.	Budget for 1935-36.	Actuals for 1935-36.
	Rs.	Rs. a. p.
Brought forward	40,38,000	42,32,989 6 2
Brought forward	3,75,000	3,41,353 5 7
Rent charges—*concld.*		
Scheme No.—*concld.*		
XXVII		5,591 13 0
XXIX		1,263 5 6
XXXI		7,530 0 0
XXXIII		432 0 0
XXXVII		65 11 9
IM		1,392 12 10
Kerbala Tank Rehousing Scheme		2,788 1 9
Paikpara Rehousing Scheme		1,218 2 0
	3,75,000	3,61,635 4 5
Interest on sale of land—		
Scheme No.-		
I		3,920 9 5
VIIC		1,614 1 9
VIIH		2,227 7 9
VIIJ		414 7 0
VIII		473 3 0
VIIIA		22 3 6
VIIIC		736 5 0
XVA		5 7 9
XVB		1,126 0 0
XVC	14,000	1,459 4 8
XVD		1 9 6
XVI		52 11 0
XXII		592 8 3
XXVI		73 0 0
XXXIII		393 4 9
XXXVII		423 14 3
IM		231 8 3
IIM		373 15 9
Paikpara Rehousing		202 3 3
	14,000	14,343 12 10
F. Under section 124(*h*)—		
Interest	1,50,000	1,46,590 2 8
Fees under section 43(*3*)	400	466 4 0
Fees under section 63(*4*)	50	37 0 0
Sale of Tender Forms	500	1,309 0 0
Miscellaneous	300	6,859 13 3
Recovery of Law Cost—		
(*a*) Land acquisition	700	1,163 11 6
(*b*) Civil suits	5,000	4,812 5 9
Hire of Road Rollers, etc.	10,000	19,108 6 4
Appreciation on Securities	1,000	2,42,417 0 0
Recovery of Bridge Estalishment (Government)	2,000	658 1 5
Total ..	1,69,950	4,23,421 12 11
TOTAL RECEIPTS ..	45,96,950	50,32,390 4 4
GRAND TOTAL ..	..	5,63,23,366 9 4

Revenue Account—Statement of Income and Expenditure.

Expenditure.

Expenditure.	Budget for 1935-36	Actuals for 1935-36.
	Rs.	Rs. a. p.
A. Under section 125 (*a*)—		
6 per cent Sterling Debenture Loan of 1922-23 for £350,000—		
Interest	2,82,000	2,78,549 3 6
Cost of management	800	731 6 3
Sinking fund	92,000	81,415 15 2
	3,74,800	3,60,696 8 11
5½ per cent. Sterling Debenture Loan of 1923-24 for £700,000—		
Interest	5,14,000	5,10,673 9 2
Cost of management	1,350	1,311 10 10
Sinking fund	1,84,000	1,62,831 14 5
	6,99,350	6,74,817 2 5
6 per cent. Debenture Loan of 1925-26 for Rs 50 lakhs—		
Interest	3,00,000	3,00,000 0 0
Cost of management	1,800	1,800 0 0
Sinking fund	87,680	87,680 0 0
	3,89,480	3,89,480 0 0
5½ per cent. Debenture Loan of 1929-30 for Rs. 25 lakhs—		
Interest	1,37,500	1,37,500 0 0
Cost of management	900	900 0 0
Sinking fund	43,840	43,840 0 0
	1,82,240	1,82,240 0 0
4 per cent. Debenture Loan of 1934-35 for Rs. 50 lakhs—		
Interest	2,00,000	2,00,000 0 0
Cost of management	1,800	1,800 0 0
Sinking fund	87,680	87,908 15 0
	2,89,480	2,89,708 15 0
3½ per cent. Debenture Loan of 1935-36 for Rs. 35 lakhs—		
Brokerage	5,000	7,494 4 0
Preliminary expenses	14,600	11,945 15 0
Stamp duty	35,000	35,000 0 0
Discount	..	1,68,367 5 0
Interest	70,000	61,250 0 0
Cost of management	710	630 0 0
Sinking fund	30,690	36,377 0 0
	1,56,000	3,21,064 8 0
Interest on Loan against Securities	25,000	3,466 6 7
B. Under section 125 (*b*)—		
Rates and taxes	3,00,000	2,65,386 4 3
C. Under section 125 (*c*)—		
Salary and allowances of Estates Manager	16,830	16,830 0 0
Clerical Establishment of Estates Manager	17,682	17,571 10 7
Collection Establishment of Estates Manager	5,073	3,834 0 0
Menial Establishment of Estates Manager	1,286	1,279 3 9
	40,871	39,514 14 4
D. Under section 125 (*f*) 120 (*1*) (*a*)—		
Salary and Allowance of the Chairman	42,000	42,000 0 0
Carried over ..	24,99,221	25,68,374 11 6

Revenue Account—(Expenditure)—*continued.*

Expenditure.	Budget for 1935-36.	Actuals for 1935-36.
	Rs.	Rs. a. p.
Brought forward ..	24,99,221	25,68,374 11 6
Under section 120 (*1*) (*b*)—		
Fees for attendance at meetings	10,000	10,470 0 0
Under section 120 (*1*) (*d*)—		
Clerical establishment of the Chairman	17,544	17,459 15 6
Menial establishment of the Chairman	3,114	3,010 4 4
Salary and allowance of the Secretary and Chief Accountant ..	14,400	9,255 4 1
Clerical establishment of Secretary	12,947	11,711 7 3
Menial establishment of Secretary	1,722	1,689 3 0
Clerical establishment of Accounts Department	25,128	24,064 10 3
Menial establishment of Accounts Department	852	851 0 0
Salary and allowance of Chief Valuer	31,800	19,918 1 9
Salary and allowance of Deputy Valuer	15,600	15,550 0 0
Valuation establishment of Chief Valuer	63,115	59,127 2 9
Clerical establishment of Chief Valuer	15,064	15,036 15 11
Government Pleader's establishment	6,307	6,265 0 6
Menial establishment of Chief Valuer	5,678	5,547 13 0
Salary and allowance of Chief Engineer	31,800	31,800 0 0
Salary and allowance of Deputy Engineer	22,800	18,915 4 2
Salary and allowance of Assistant Engineers	25,500	20,675 0 0
Clerical establishment of Chief Engineers	33,136	32,770 14 3
Drawing establishment of Chief Engineer	53,535	52,227 2 3
Workshop and Stores establishment of Chief Engineer ..	60,171	59,981 8 6
Outdoor establishment of Chief Engineer	68,006	67,573 5 9
Temporary establishment of Chief Engineer	4,000	3,267 9 9
Menial establishment of Chief Engineer	19,356	18,930 0 3
Maintenance Staff for Open Spaces, etc.	9,843	9,417 8 0
Pipe Laying Establishment of Ehief Engineer	19,011	18,941 6 0
Leave and Acting Allowances	25,000	15,494 11 5
Trust's Contribution to Provident Fund	1,20,000	62,688 1 8
Gratuity	40,000	16,375 8 0
Passage concession	1,640	1,986 0 0
	7,47,069	6,20,530 14 4
E. Under section 120 (*d*)—		
Salary to Corporation Engineer	17,000	14,743 12 6
F. Under section 120 (*1*) (*e*)—		
Cost of tribunal	1,02,333	92,637 4 4
G. Under section 120 (*1*) (*f*)—		
Rent of offices	32,800	32,804 4 0
Office fixtures	1,000	727 3 3
Office furniture	2,000	532 2 9
Electric fittings	2,500	1,835 14 6
Electric current	3,000	2,786 13 0
Telephone	4,400	3,846 9 5
Printing	8,000	6,316 8 9
Photography	700	954 8 0
Magazines and newspaper	300	144 2 0
Books	200	267 11 6
Bookbinding	200	140 10 0
Stationery	6,000	4,968 5 6
Office contingencies	3,500	2,818 4 2
Postage and telegrams	1,000	864 10 3
Peon's badges and uniforms	5,000	4,583 9 9
Receipt stamps	500	267 11 0
Drawing requisites	3,000	2,324 5 0
	74,100	66,183 4 10
Carried over ..	34,49,723	33,72,939 15 6

Revenue Account—(Expenditure)—*concluded.*

Expenditure.	Budget for 1935-36.	Actuals for 1935-36.
	Rs.	Rs. a. p.
Brought forward ..	34,49,723	33,72,939 15 6
H. Under section 125 (*1*) (*e*)—		
Tramway subsidy	2,000	*Cr* 36 2 6
I. Under section 125 (*1*) (*g*)—		
Mathematical and other instruments	2,100	1,281 0 0
Advertisements	5,000	6,122 6 0
Travelling allowances outside Calcutta	300	990 11 0
Travelling allowances in Calcutta	800	580 8 9
Maps	2,500	1,283 9 0
Insurance	3,000	2,607 2 0
Stamp Duty	20,000	8,703 10 0
Interest to Provident Fund	40,000	35,825 10 8
Lawyer's fees—		
(*a*) Legal advice	4,000	439 0 0
(*b*) Litigation	20,000	17,706 2 7
(*c*) Land acquisition	18,000	19,932 0 0
(*d*) Legal expenses of the Tribunal	1,000	984 14 9
Fees to experts	600	350 0 0
Royal exchange membership	200	180 0 0
Stores for motor lorries and road rollers	20,000	18,818 3 5
Bank Commission	500	182 9 6
Repairs to office buildings	500	715 7 0
Repairs to tools and plant	4,000	9,581 15 8
Damage done to stores	2,000	88 3 11
Miscellaneous expenditure	1,000	549 3 9
	1,45,500	1,26,922 6 0
J. Expenses of management of Property—		
Minor repairs	2,000	2,120 9 3
Repairs to model dwellings	10,000	2,320 4 3
Temporary durwans on schemes	1,680	1,296 3 0
Menial staff of model dwellings	2,941	2,929 14 0
Contingencies, model dwellings	400	202 4 6
Electric current, model dwellings	2,000	1,054 6 0
Fencing for open spaces	1,000	867 10 1
Compensation for damages	500	....
Conservancy for building plots	200	76 8 0
Calcutta Health Exhibition	100	61 0 0
	20,821	10,928 11 1
Proposed Public Street	500	....
Preliminary Expenses—		
Street Alignment No.—		
II	..	135 5 2
IV	..	1 1 6
V	..	48 7 0
XII	..	25 0 0
XXII	..	25 0 0
XXVIII	..	89 6 0
	500	324 3 8
Total ..	36,18,544	35,11,079 1 9
Surplus on Revenue Account	.	5,28,12,287 7 7
GRAND TOTAL ..	..	5,63,23,366 9 4

Miscellaneous and Suspense items on 31st March 1936.

Sundry debtors.	Balance on 31st March 1935.		During the year 1935-36		Total to 31st March 1936		Balance on 31st March 1936	
	Credits	Debits.	Credits	Debits	Credits.	Debits	Credits	Debits.
	Rs	Rs. a p	Rs a. p	Rs. a. p.	Rs. a p	Rs a. p.	Rs.	Rs. a. p.
Advance to Land Acquisition Collector ..	..	9,231 12 1	72,84,023 14 7	72,76,304 15 3	72,84,023 14 7	72,85,536 11 4		1,512 12 9
Advance to Corporation	..	19,240 11 2	....	237 3 9	....	19,477 14 11	..	19,477 14 11
Advance to contractors	..	9,301 2 4	62,632 4 9	58,497 11 6	62,632 4 9	67,798 13 10	.	.. 5,166 9 1
Advance for Counsel fees ..	..	16,810 14 0	10,220 15 3	22,239 10 3	10,220 15 3	39,050 8 3	..	28,829 9 0
Advance for motor cars	..	55 0 0	55 0 0	....	55 0 0	55 0 0	.	. ..
Advance for house building ..	..	5,660 6 8	2,383 12 0	2,100 0 0	2,383 12 0	7,760 6 8		5,376 10 8
Advance to Divisional Engineer, Telegraph	..	22 1 0	22 1 0	606 0 0	22 1	628 1 0		606 0 0
Advance to Agricultural and Horticultural Society ..	..	78 10 0	....	....	....	78 10 0	..	78 10 0
Advance to Postal Insurance Premium	..	2 3 11	....	...	....	2 3 11	..	2 3 11
Advance to Executive Engineer, Public Works Department, Calcutta, 1st Division	..	37 8 0	....	....	....	37 8 0		37 8 0
Stamp Duty suspense	..	10 6 6	....	8 9 6	....	19 0 0	..	19 0 0
Contract Stamp suspense	..	33 12 0	68 12 0	55 12 0	68 12 0	89 8 0		20 12 0
Misappropriation of Trust Funds ..	.	25,096 2 4	....	....	....	25,096 2 4		25,096 2 4
Petty cash imprests ..	..	600 0 0	....	....	....	600 0 0	.	600 0 0
Outstanding dues ..	..	1,36,098 10 3	1,36,098 10 3	1,13,621 3 9	1,36,098 10 3	2,49,719 14 0	..	1,13,621 3 9
Supply of stores ..	..	98,096 3 5	2,45,202 3 0	3,13,750 15 10	2,45,202 3 0	4,11,847 3 3	..	1,66,645 0 3
Cost of land suspense	..	171 1 9	....	....	....	171 1 9	..	171 1 9
Payment on account of contractors ..	..	8,500 0 0	14,100 0 0	20,000 0 0	14,100 0 0	28,500 0 0	.	14,400 0 0
Advertisement suspense	..	722 12 0	....	754 12 0	....	1,477 8 0	..	1,477 8 0
Agreement stamp suspense ..	..	20 4 0	338 0 0	335 12 0	338 0 0	356 0 0	..	18 0 0
Advance for stationery	..	....	934 11 0	934 11 0	934 11 0	934 11 0	..	....
Salary suspense account	..	1,087 10 3	1,178 10 11	91 0 8	1,178 10 11	1,178 10 11	..	....
Total ..	..	3,30,877 3 8	77,57,258 14 9	78,09,538 5 6	77,57,258 14 9	81,40,415 9 2		3,83,156 10 5

Miscellaneous and Suspense items on 31st March 1936.

Sundry creditors	Balance on 31st March, 1935.		During the year 1935-36		Total to 31st March, 1936		Balance on 31st March, 1936	
	Debits	Credits	Debits.	Credits	Debits.	Credits	Debits	Credits
	Rs	Rs a. p	Rs a. p	Rs a. p	Rs a. p.	Rs a. p	Rs	Rs a. p
I. Deposits of Contractors—								
(a) On contracts	..	9,677 0 0	20,193 0 0	20,112 0 0	20,193 0 0	29,789 0 0	.	9,596 0 0
(b) On tenders ..	..	6,655 0 0	82,200 5 3	95,135 5 3	82,200 5 3	1,01,790 5 3	..	19,590 0 0
(c) Retention money	.	33,234 10 3	36,417 1 0	55,461 0 0	36,417 1 0	88,695 10 3	..	52,278 9 3
	..	49,566 10 3	1,38,810 6 3	1,70,708 5 3	1,38,810 6 3	2,20,274 15 6	..	81,464 9 3
II. Provindent Fund Depositors' Account	..	7,04,694 2 7	59,895 9 7	87,310 12 5	59,895 9 7	7,92,004 15 0	..	7,32,109 5 5
III Tribunal Provident Fund ..	..	11,096 12 5	108 0 0	14,177 3 3	108 0 0	25,273 15 8	..	25,165 15 8
IV. Income-tax ..	.	139 0 6	32,272 1 8	32,268 13 6	32,272 1 8	32,407 14 0	..	135 12 4
V (a) Interest on employees' securities .	..	....	1,075 0 0	1,075 0 0	1,075 0 0	1,075 0 0	..	....
(d) Deposit for Calcutta Corporation ..	..	1,783 4 5	1,078 5 0	1,078 13 3	1,078 5 0	2,862 1 8	..	1,783 12 8
(e) Miscellaneous Creditors' Account .	..	2,023 6 3	11,020 14 8	11,231 0 7	11,020 14 8	13,254 6 10	..	2,233 8 2
(d) Postal Insurance Premium ..	..	....	1,400 14 0	1,400 15 0	1,400 14 0	1,400 15 0	..	0 1 0
(e) Deposit against Court Attachment ..	..	28 0 0	....	1,882 4 7	....	1,910 4 7	..	1,910 4 7
Unpaid bills ..	..	13,672 1 4	19,286 11 10	40,549 11 0	19,286 11 10	54,221 12 4	..	34,935 0 6
Undisbursed salaries ..	..	853 10 7	919 10 10	1,105 5 6	919 10 10	1,959 0 1	..	1,039 5 3
Work suspense ..	..	3,419 3 0	765 11 3	1,027 4 0	765 11 3	4,446 7 0	..	3,680 11 9
Fees for footing suspense ..	..	52,264 5 9	38 12 0	6,321 10 0	38 12 0	58,585 15 9	..	58,547 3 9
C I T Co-operative Credit Society ..	.	0 3 0	35,462 7 0	35,904 10 0	35,462 7 0	35,904 13 0	..	442 6 0
Rent charge—Suspense	..	8,305 0 0	897 1 4	3,397 1 4	897 1 4	11,702 1 4	.	10,805 0 0
Sale of land—Suspense	..	1,345 0 0	1,11,112 6 3	1,98,447 0 0	1,11,112 6 3	1,99,792 0 0	..	88,679 9 9
Miscellaneous—Suspense	..	772 2 0	....	....	. ..	772 2 0	.	772 2 0
Chairman's salary Deduction ..	..	6,052 14 0	6,202 14 0	150 0 0	6,202 14 0	6,202 14 0	..	. ..
Employees' securities	..	8,100 0 0	5,000 0 0	100 0 0	5,000 0 0	8,200 0 0	..	3,200 0 0
Bridge Contribution—Suspense .	..	....	1,74,964 9 2	1,74,964 9 2	1,74,964 9 2	1,74,964 9 2	.	....
Bank Commission Suspense ..	..	10 9 0	60 0 0	61 2 0	60 0 0	71 11 0	.	11 11 0
Interest on Exemption Fees Suspense .	..	1,000 0 0	1,000 0 0	....	1,000 0 0	1,000 0 0		. ..
	..	99,768 11 10	4,02,557 7 0	5,10,965 3 11	4,02,557 7 0	6,10,733 15 9	..	2,08,176 8 9
Overdraft against securities .	.	..	14,50,000 0 0	14,50,000 0 0	14,50,000 0 0	14,50,000 0 0	..	....
GRAND TOTAL ..	..	8,65,126 5 1	20,51,371 6 10	22,33,161 8 10	20,51,371 6 10	30,98,287 13 11		10,46,916 7 1

Statement of Valuation of the Securities in the Sinking Fund Accounts of the Trust Debenture Loans as at 31st March, 1936.

Loan.	Sinking Fund Valuation at 31st March, 1936	Amount actuarially required at 31st March, 1936.	Excess.
6 per cent. Debenture Loan of 1922 for £350,000 ..	£113,792 0 0*	£104,706 0 0	£39,086 0 0
5½ per cent. Debenture Loan of 1923 for £700,000 ..	£274,765 0 0*	£199,865 0 0	£74,900 0 0
6 per cent. Debenture Loan of 1925 for Rs. 50 lakhs	Rs. 13,45,815 0 0*	Rs. 10,85,681 0 0	Rs. 2,60,164 0 0
5½ per cent. Debenture Loan of 1929 for Rs. 25 lakhs	Rs. 3,86,839 0 0*	Rs. 3,22,287 0 0	Rs. 64,552 0 0
4 per cent. Debenture Loan of 1934 for Rs. 50 lakhs	Rs. 1,37,204 0 0*	Rs. 1,34,838 0 0	Rs. 2,366 0 0
3½ per cent. Debenture Loan of 1935 for Rs 35 lakhs	Rs. 36,311 0 0	Rs. 36,431 0 0	Rs. 120 0 0 (Shortage).

*Accrued interest ignored.

Statement of weekly gauge readings on the river Ganges at Rampur Boalia for the week ending the 10th April 1937.

Date.	Hour.	Height of surface above P. W. D. datum.	Height of surface above P. W. D. datum on the same date last year.	Remarks.
1937.				
4th April	7 a.m.	35·20	34·40	Value of B. M. on Rajshahi College step =64·73 P. W. D. Zero of gauge = 29·80 P. W. D.
5th "	7 "	35·10	34·40	
6th "	7 "	35·00	34·45	
7th "	7 "	34·95	34·45	
8th "	7 "	34·85	34·45	
9th "	7 "	34·80	34·50	
10th "	7 "	34·70	34·55	

Highest recorded level on 26-8-1879=64·24.
Lowest recorded level on 24-4-1931=32·05.

[ILLEGIBLE], for *Subdivisional Officer,*
Irrigation Department, Rajshahi.

Rampur Boalia, the 24th April 1937.

Statement of weekly gauge readings on the river Ganges at Rampur Boalia for the week ending the 17th April 1937.

Date.	Hour.	Height of surface above P. W. D. datum.	Height of surface above P. W. D. datum on the same date last year.	Remarks.
1937.				
11th April	7 a.m.	34·60	34·55	Value of B. M. on Rajshahi College step = 64·73 P. W. D. Zero of gauge = 29·80 P. W. D.
12th "	7 "	34·60	34·55	
13th "	7 "	34·50	34·55	
14th "	7 "	34·15	34·50	
15th "	7 "	34·10	34·45	
16th "	7 "	34·35	34·40	
17th "	7 "	34·30	34·30	

Highest recorded level on 26-8-1879 64·24.
Lowest recorded level on 24-4-1931 32·05.

[ILLEGIBLE], for *Subdivisional Officer, Irrigation Department, Rajshahi.*

Rampur Boalia, the 24th April 1937.

Statement showing the gauge readings at Dacca Waterworks Station on the river Buriganga for the week ending 17th April 1937.

Date.	At highest water.		At lowest water.		Commencement of—		Remarks.	
	Time.	Reading.	Time.	Reading.	Ebb tide.	Flow tide.	7 a.m.	5 p.m.
1937.								
11th April ..	11-0	5·45	18-0	4·7	11-10	18-8	4·9	4·8
12th " ..	12-0	5·25	18-0	4·65	12-12	18-12	4·75	4·75
13th " ..	12-30	5·2	7-0	4·6	12-14	7-14	4·6	4·8
14th " ..	13-0	5·0	7-0	4·45	13-14	7-16	4·45	4·6
15th " ..	14-0	4·95	8-0	4·35	14-16	8-16	4·5	4·5
16th " ..	16-0	4·9	10-0	4·3	16-12	10-14	4·7	4·75
17th " ..	7-0	4·9	12-0	4·35	7-10	12-12	4·9	4·8

Notable high and low water-levels of previous years.

		Taken at high tide.			Taken at low tide.
27th August	1906 ..	70·5	23rd February	1907 ..	51·06
5th September	1909 ..	66·86	13th "	1908 ..	51·06
10th August	1910 ..	69·86	12th March	1912 ..	51·06
1st "	1911 ..	68·46	6th "	1914 ..	50·60
13th "	1912 ..	67·16	22nd February	1915 ..	50·30
31st "	1915 ..	69·7	15th "	1916 ..	50·60
8th "	1916 ..	68·1	3rd March	1917 ..	51·0
12th "	1917 ..	67·1	21st February	1918 ..	51·40
13th "	1918 ..	69·12	26th "	1919 ..	50·4
2nd "	1919 ..	66·8	18th "	1920 ..	50·9
8th September	1920 ..	66·9	19th "	1921 ..	50·9
28th July	1921 ..	68·4	8th March	1922 ..	51·05
10th August	1922 ..	68·00	14th "	1923 ..	50·8
31st July	1923 ..	66·15	16th February	1924 ..	50·50
29th August	1924 ..	68·82	5th March	1925 ..	50·9
8th September	1925 ..	68·52	9th February	1926 ..	2·2
15th August	1926 ..	19·6	27th "	1927 ..	2·10
17th September	1927 ..	18·70	16th "	1928 ..	2·2
22nd August	1928 ..	20·0	21st "	1929 ..	2·0
13th July	1929 ..	17·8	24th "	1930 ..	2·3
12th September	1930 ..	18·65	28th "	1931 ..	2·2
16th August	1931 ..	21·7	18th "	1932 ..	1·8
6th September	1932 ..	18·5	6th "	1933 ..	2·10
7th "	1933 ..	17·80	26th March	1934 ..	2·40
23rd August	1934 ..	19·35	15th February	1935 ..	1·70
1st September	1935 ..	19·80	3rd March	1936 ..	1·90
21st August	1936 ..	19·35			

N.B.—Zero of the gauge at Dacca Waterworks prior to 11 a.m. on the 8th January 1926= —48·51 with reference to P. W. D. datum.

Zero of the gauge at Dacca Waterworks since 11 a.m. of the 8th January 1926=0·00 with reference to P. W. D. datum.

M. K. BHATTACHERJEE, *Executive Engineer,*
Khulna Division.

Khulna, the 23rd April 1937.

DISTRICT REPORTS ON WEATHER AND CROPS.

For the week ending on the 21st April 1937.

Summary.—During the week the rainfall was generally light and scattered. It has benefited the growth of the existing plants and facilitated cultivation of autumn crops. Prospects of standing crops are, on the whole, fair. Harvesting of *rabi* crops is almost finished. The average price of common rice for the province has risen by about 0·69 per cent. as compared with that of the previous week.

Serial No.	District and sub-division.	Rainfall.	Price of common rice, in seers, per rupee.		Character of the weather, condition of crops, etc.
			This week.	Previous week.	
1	2	3	4	5	6
		Inches.			
1	24-Parganas ..	Nil	10½	10½	Weather seasonable. Fodder and water are sufficient. No export or import of paddy is reported.
	Diamond Harbour..	Nil	12	12	
	Barrackpore ..	Nil	10	12	
	Baraset ..	Nil	12	12	
	Basirhat ..	Nil	12½	13	
2	Nadia ..	Nil	11 7/16	11 7/16	Weather seasonable Prospect of standing crops is, on the whole, fair Harvesting of *rabi* crops is finished. Fodder and water are available. No large import or export.
	Kushtia ..	Nil	11½	11½	
	Meherpur ..	Nil	10	10	
	Chuadanga ..	Nil	11	11	
	Ranaghat ..	Nil	9½	9½	
3	Murshidabad ..	0·01	12½	12½	Weather cloudy. Prospects of crops are favourable. Fodder and water are sufficient. No large import or export. Stock of rice is sufficient. Cattle-disease is reported from Kandi subdivision.
	Lalbagh ..	Nil	12½	12	
	Jangipur ..	0·74	13½	13½	
	Kandi ..	Nil	14	14	
4	Jessore ..	0·06	11	11½	Weather seasonable. Prospects of standing crops are fair. No large export or import. Fodder and water are sufficient.
	Jhenidah ..	1·95	12	12	
	Magura ..	0·52	11	11	
	Narail ..	(*n*)	(*n*)	11	
	Bongaon ..	0·01	12	12	
5	Khulna ..	0·67	13	13	Weather seasonable. Fodder and water are not sufficient in the Satkhira subdivision owing to scarcity of rain. Cattle-disease is reported from Kachua, Sarangkhola and Bagerhat thanas.
	Satkhira ..	Nil	13	13	
	Bagerhat ..	Nil	11	11	

(*n*) Not reported.

Serial No.	District and sub-division.	Rainfall.	Price of common rice, in seers, per rupee.		Character of the weather, condition of crops, etc.
			This week.	Previous week.	
1	2	3	4	5	6
		Inches.			
6	Burdwan ..	0·42	12½	12½	Weather hot. Condition of crop is fair. Fodder and water are sufficient.
	Asansol ..	Nil	12	12	
	Katwa ..	Nil	13	13	
	Kalna ..	0·22	11½	11½	
7	Birbhum ..	0·28	13	13	Weather seasonable. Prospects of standing crops are good. Fodder and water are sufficient.
	Rampurhat ..	Nil	13	13	
8	Bankura ..	0·19	13	13	Weather cloudy. Lands are being ploughed and manured. Prospects of standing crops are good. No large export or import. Fodder and water are sufficient.
	Vishnupur ..	0·05	13¾	13¾	
9	Midnapore ..	Nil	13	13	Scarcity of water is felt in some places of Tamluk subdivision.
	Contai ..	Nil	14	14	
	Tamluk ..	Nil	13	13	
	Ghatal ..	Nil	14½	14½	
	Jhargram ..	Nil	13	13	
10	Hooghly ..	0·24	10½	10½	Weather seasonable. Fodder and water are sufficient.
	Serampore ..	0·45	11	10½	
	Arambagh ..	Nil	11	11	
11	Howrah ..	Nil	11 3/7	10	Weather seasonable. Its effects are good. Fodder and water are sufficient.
	Uluberia ..	Nil	10	10	
12	Rajshahi (Rampur-Boalia).	(n)	(n)	10	Report not received.
	Naogaon ..	(n)	(n)	10½	
	Nator ..	(n)	(n)	11½	
13	Dinajpur ..	0·65	9	9	Weather seasonable. Fodder and water are sufficient. Cattle-disease is reported from Khansama and Birganj thanas.
	Thakurgaon ..	Nil	13	13	
	Balurghat ..	0·20	13 4/16	13 4/16	
14	Jalpaiguri ..	0·21	13	13	Weather seasonable. Rainfall scanty, hampers sowing of *bhadoi* paddy and jute. Harvesting of tobacco is still going on. Fodder and water are sufficient. Cattle-disease exists in Debiganj police-station.
	Alipur ..	1·06	11	11	

(n) Not reported.

Serial No.	District and sub-division.	Rainfall.	Price of common rice, in seers, per rupee.		Character of the weather, condition of crops, etc.
			This week.	Previous week.	
1	2	3	4	5	6
		Inches.			
15	Darjeeling ..	0·71	8	8	Fodder and water are sufficient.
	Kurseong ..	(n)	(n)	9	
	Siliguri ..	2·00	11½	11½	
	Kalimpong ..	Nil	7	7½	
16	Rangpur ..	(n)	12	12	Weather seasonable. More rain is urgently wanted. Sowing of *aus* paddy and jute in high lands is retarded for want of rain. Prospects of standing crops are fair. No large export or import. Fodder and water are sufficient.
	Nilphamari ..	0·21	11	11	
	Kurigram ..	0·02	10	10	
	Gaibandha ..	(n)	(n)	(n)	
17	Bogra ..	Nil	12¾	12¾	Weather sultry. Sowing of jute and *aus* paddy is being delayed for want of rain. No damage to crops. Fodder and water are sufficient.
18	Pabna ..	Nil	12	12	Weather hot. Drought is causing anxiety and affecting growth of standing crops. It is delaying the sowing of *aus* paddy and jute. Condition of standing crops is fair. Fodder and water are sufficient.
	Serajganj ..	0·07	10½	10 1/16	
19	Malda ..	0·04	12	12½	Weather seasonable. Harvesting of *rabi* crops continues. Rain is really wanted for cultivation of *bhadoi* and jute Fodder and water are available.
20	Cooch Behar ..	(n)	(n)	(n)	Report not received.
21	Dacca ..	1·53	11	10½	Rainfall at North Sadar (Kapasia) nil. Weather seasonable. Prospects of standing crops are reported to be fair. No large export or import. Fodder and water are available. Cattle-disease exists in Munshiganj subdivision.
	Manikganj ..	Nil	10½	10½	
	Narayanganj ..	0·88	12	12	
	Munshiganj ..	1·14	10	11	

(n) Not reported.

Serial No.	District and sub-division.	Rainfall.	Price of common rice, in seers, per rupee.		Character of the weather, condition of crops, etc.
			This week.	Previous week.	
1	2	3	4	5	6
		Inches.			
22	Mymensingh ..	1·01	12	12	Weather seasonable. More rain is necessary. Agricultural operation is normal. Fodder and water are available.
	Jamalpur ..	0·79	11½	(n)	
	Tangail ..	Nil	11	11	
	Netrakona ..	0·41	12¾	12¼	
	Kishorganj ..	1·10	10½	11	
23	Faridpur ..	1·86	10	11	Weather seasonable. Condition of standing crops is fair. Fodder and water are sufficient.
	Goalundo (Rajbari)	2·90	10	10½	
	Madaripur ..	Nil	11½	11½	
	Gopalganj (a) ..	Nil	11	11	
24	Bakarganj (Barisal)	Nil	11	11	Weather seasonable. Prospects of standing crops are good in Pirojpur, Patuakhali and Sadar and fair in Bhola. Fodder and water are sufficient. Cattle-disease is reported from Bhola and Pirojpur subdivisions.
	Pirojpur ..	Nil	11¼	11¼	
	Patuakhali ..	Nil	10½	10½	
	Dakshin Shabazpur (Bhola).	Nil	11	11	
25	Chittagong ..	0·09	10 11*	10 11*	Weather seasonable. Harvesting of *rabi* crops is nearly completed. Fodder and water are sufficient. Cattle-disease exists in Sadar, Rauzan, Patiya and Satkania. Panga salt sells at 14 seers at Sadar.
	Cox's Bazar ..	(n)	(n)	12	
26	Tippera (Comilla) ..	0·66	13½	12½	Prospects of crops are fair.
	Brahmanbaria ..	0·08	12½	13	
	Chandpur ..	Nil	12½	12¾	
27	Noakhali ..	1·25	12	12	Fodder and water are sufficient. Cattle-disease exists in Feni and Sonagazi thanas.
	Feni ..	0.20	13	13	
28	Chittagong Hill Tracts.	1·27	14	14	Weather seasonable. Its effects are favourable. Fodder and water are sufficient. Cattle-disease is reported from Lama police-station.
29	Tripura State ..	(n)	(n)	(n)	Reports not received.

(a) The rainfall at Haridaspur, which is very near to Gopalganj, is shown here.

(n) Not reported. * Burma rice.

J. C. BASU, for *Director of Agriculture, Bengal.*

Dacca, the 26th April 1937.

Wholesale prices current of food grains, gur, etc., in the undermentioned marts of Bengal for the first half of April 1937.

Marts.	Paddy local (best quality).			Paddy local (common quality).			Rice local (best quality).		
	Present return.	Next preceding return.	Corresponding return of last year.	Present return.	Next preceding return.	Corresponding return of last year.	Present return.	Next preceding return.	Corresponding return of last year.
1	2	3	4	5	6	7	8	9	10
	Rs. a. p.	Rs. a. p.	Rs. a. p.	Rs. a. p.	Rs. a. p.	Rs. a. p.	Rs. a. p.	Rs. a. p.	Rs. a. p.
Calcutta	2 4 0	2 4 0	3 0 0	2 0 0	2 0 0	2 8 0	4 14 0	4 12 0	5 0 0
Burdwan	1 10 0	1 12 0	2 6 0	1 8 0	1 9 0	2 4 0	4 6 0	4 6 0	4 8 0
Midnapore	1 8 0	1 8 0	2 7 0	1 6 6	1 6 6	1 15 0	3 6 0	3 6 0	4 6 0
Chittagong	1 12 0	1 12 0	1 14 0	1 11 0	1 11 0	1 13 0	4 4 0	4 4 0	4 6 0
Dacca	2 4 0	2 4 0	2 5 0	2 0 0	2 0 0	2 3 0	4 0 0	4 0 0	4 0 0
Pabna	2 4 0	2 4 0	2 4 0	2 0 0	2 0 0	2 0 0	3 12 0	3 12 0	4 8 0
Rangpur	1 12 0	1 12 0	1 14 0	1 10 0	1 10 0	1 10 0	4 8 0	4 8 0	4 6 0
Serajganj (Pabna)	..	..	..	..	..	..	..	..	..
Sarisabari (Mymensingh) ..	..	..	..	..	..	..	..	..	..
Narayanganj (Dacca)	..	..	..	..	..	..	..	..	..

Marts.	Rice local (common quality).			Wheat.			Raw cotton.		
	Present return.	Next preceding return.	Corresponding return of last year.	Present return.	Next preceding return.	Corresponding return of last year.	Present return.	Next preceding return.	Corresponding return of last year.
	11	12	13	14	15	16	17	18	19
	Rs. a. p.	Rs. a. p.	Rs. a. p.	Rs. a. p.	Rs. a. p.	Rs. a. p.	Rs. a. p.	Rs. a. p.	Rs. a. p.
Calcutta	4 0 0	4 2 0	4 8 0	4 8 0	4 6 0	3 7 0	22 6 0	22 10 0	18 8 0
Burdwan	4 0 0	4 0 0	4 0 0	..	..	..	..	..	..
Midnapore	2 11 0	2 11 0	3 5 3	..	..	..	..	..	..
Chittagong	3 4 0	3 4 0	3 8 0	..	..	..	..	..	..
Dacca	3 12 0	3 12 0	3 8 0	..	..	..	..	..	..
Pabna	3 5 6	3 5 6	3 11 0	..	..	..	..	..	..
Rangpur	3 8 0	3 8 0	3 12 0	..	..	..	..	..	..
Serajganj (Pabna)	..	..	..	..	..	..	..	..	..
Sarisabari (Mymensingh) ..	..	..	..	..	..	..	..	..	..
Narayanganj (Dacca)	..	..	..	..	..	..	..	..	..

Marts.	Coal.			Raw jute (weighted average).			*Gur* (sugarcane).		
	Present return.	Next preceding return.	Corresponding return of last year.	Present return.	Next preceding return.	Corresponding return of last year.	Present return.	Next preceding return.	Corresponding return of last year.
	20	21	22	23	24	25	26	27	28
	Rs. a. p.	Rs. a. p.	Rs. a. p.	Rs. a. p.	Rs. a. p.	Rs. a. p.	Rs. a. p.	Rs. a. p.	Rs. a. p.
Calcutta	0 7 0	0 8 0	0 6 6	6 8 0	6 0 0	6 8 0	3 4 0	3 4 0	3 0 0
Burdwan	..	..	..	..	..	..	3 12 0	3 14 0	4 0 0
Midnapore	..	..	..	..	..	..	3 12 0	3 12 0	4 8 0
Chittagong	..	..	..	..	..	..	4 8 0	4 8 0	3 12 0
Dacca	..	..	..	..	..	..	3 8 0	3 8 0	4 0 0
Pabna	..	..	..	..	..	..	2 4 0	2 0 0	3 0 0
Rangpur	..	..	..	..	..	..	3 8 0 to 4 0 0	3 8 0 to 4 0 0	3 0 0 to 3 4 0
Serajganj (Pabna)	..	..	..	5 6 0	5 0 0	5 4 0	..	..	..
Sarisabari (Mymensingh) ..	..	..	..	4 14 0 to 6 15 0	4 15 0 to 6 7 0	4 14 0 to 6 14 0	..	..	..
Narayanganj (Dacca)	..	..	..	5 12 0 to 6 2 0	4 14 0 to 5 12 0	4 12 0 to 6 0 0	..	..	..

Dacca, the 24th April 1937.

J. C. BASU, for *Director of Agriculture, Bengal.*

Prices-current (retail) of common rice and salt in the districts of Bengal for the first half of April 1937.

Districts and Marts.	Quantity per rupee in seers of eighty tolas.								
	Common rice.						Salt.		
	Average.			Cheapest.					
	Present return.	Next preceding return.	Corresponding return of last year.	Present return.	Next preceding return.	Corresponding return of last year.	Present return.	Next preceding return.	Corresponding return of last year.
	S. CH.	S. CH.	S. CH.	S. CH.	S. CH.	S. CH.	S. CH.	S. CH.	S. CH.
PRESIDENCY DIVISION.									
24-Parganas—									
1 Chetla Hat ..	11 8	11 5	9 11	13 0	13 0	11 6	16 0C	16 8C	17 12
2 Mogra Hat ..	(a) 12 8	(a) 12 0	10 0	(a) 15 0	(a) 14 0	10 10	16 0C 15 0K	16 0C 15 0K	16 0
3 Calcutta-Beliaghata	8 12	10 0	8 12	11 10	11 0	10 0	19 2C 17 0K 15 12P	19 2C 17 0K 15 14P	16 0
Nadia—									
4 Goari	11 7	12 5	8 15	(a) 12 5	(a) 13 0	12 15	14 0P 14 0K	14 0P 14 0K	14 0P 14 0K
5 Ranaghat ..	9 8	9 8	10 0	11 12	11 12	12 8	14 0P 14 0K	14 0P 14 0K	14 0P 14 0K
Murshidabad—									
6 Berhampore ..	12 0	12 0	11 0	12 8	12 8	11 3	14 0K	14 0K	14 K
7 Kandi	(a) 14 0	(a) 14 0	11 0	(a) 14 12	(a) 14 12	11 4	13 8K 13 0B	13 0K 13 0B	15 0K 14 8B
8 Jangipur ..	12 0	12 8	10 0	(a) 13 0	(a) 13 8	10 8	15 0K	16 0K	15 0
Jessore—									
9 Sadar	11 0	11 8	12 0	12 0	12 8	13 0	16 0P 15 0K	16 0P 15 0K	14 0P 14 0K
10 Bongaon ..	10 8	10 0	10 0	12 8	12 0	12 8	14 8P 15 0K	14 8P 15 0K	14 8P 15 0K
Khulna—									
11 Sadar	(a) 10 12	(a) 10 8	10 8	(a) 11 8	(a) 13 0	13 0	16 0C 16 0K	16 0C 16 0K	13 0C 13 0K
12 Bagerhat ..	11 0	11 0	10 0	12 0	12 0	11 0	15 0K	15 0K	15 0K
BURDWAN DIVISION.									
Burdwan—									
13 Sadar ..	10 0	10 0	10 0	10 8	10 8	10 4	13 0C 13 0K	13 0C 13 0K	14 8C 14 8K
14 Kalna ..	(a) 11 4	11 4	9 6	(a) 12 8	12 8	10 0	18 0K	18 0K	16 0
Birbhum—									
15 Suri	13 0	13 0	11 0	14 0	14 0	11 4	14 0M	14 0M	14 0
16 Rampurhat ..	13 0	13 0	10 8	14 0	14 0	11 0	16 0C	16 0C	16 0
Bankura—									
17 Sadar	(a) 12 8	(a) 13 0	10 0	(a) 13 8	(a) 14 0	11 0	14 0P	14 0P	14 0P
18 Vishnupur ..	14 0	13 12	10 8	(a) 15 0	(a) 15 0	11 0	13 0P	13 0P	13 0P

P—Panga. K—Karkach. B—Bombay. C—Crushed.

(a) New. M—Madras.

Prices-current (retail) of common rice and salt in the districts of Bengal for the first half of April 1937.

Districts and Marts.	Quantity per rupee in seers of eighty tolas.								
	Common rice.						Salt.		
	Average.			Cheapest.					
	Present return.	Next preceding return.	Corresponding return of last year.	Present return.	Next preceding return.	Corresponding return of last year.	Present return.	Next preceding return.	Corresponding return of last year.
	S. CH.	S. CH.	S. CH.	S. CH.	S. CH.	S. CH.	S. CH.	S. CH.	S. CH.
BURDWAN DIVISION—*concld.*									
Midnapore—									
19 Sadar	13 0	13 0	12 6	14 0	14 0	13 1	14 0L	14 0L	14 0L
20 Contai	(a) 14 0	(a) 14 0	11 0	(a) 15 8	(a) 16 0	13 0	(b) 40 0C	(b) 32 0C	(b) 26 0C
Hooghly—									
21 Sadar	10 8	10 8	10 0	11 8	11 8	13 0	16 0P	16 0P	13 8P
22 Arambagh ..	11 0	11 0	10 8	11 8	11 8	11 0	16 0P 15 0K	16 0P 15 0K	15 8P 14 8K
Howrah—									
23 Sadar ..	10 0	9 0	10 0	11 0	11 8	11 0	16 0C 13 0K	16 0C 13 0K	16 0C 13 0K
24 Ulnberia ..	10 0	10 0	10 0	12 0	12 0	11 0	14 8C 13 4K	16 0C 13 4K	16 0C 13 8K
RAJSHAHI DIVISION.									
Rajshahi—									
25 Rampur-Boalia ..	11 0	(a) 12 0	10 4	13 0	(a) 13 0	11 10	13 8P 13 8K	13 8P 13 8K	12 0C 12 0K
26 Nator .. .	10 8	10 8	10 8	12 12	12 12	12 0	12 0C 12 0K	12 0C 12 0K	12 0L 12 0K
27 Dinajpur—Railbazar Hat.	9 0	9 0	10 14	12 0	12 0	11 8	10 0C	10 0C	13 0K
28 Jalpaiguri—Sadar ..	(a) 12 0	(a) 12 0	12 0	(a) 13 0	(a) 13 0	14 0	13 0C	13 0C	13 0
Darjeeling—									
29 Sadar	7 8	7 8	9 0	8 8	8 8	10 0	10 8P 10 0K	10 8P 10 0K	10 0P 9 0K
30 Siliguri ..	11 0	11 8	11 8	12 0	12 8	12 0	12 0P 12 0K 12 0C	12 0P 12 0K 12 0C	12 0‡
Rangpur—									
31 Sadar	(a) 12 15	(a) 12 15	11 13	12 15	(a) 12 15	11 13	13 8P	13 8P	13 8P
32 Nilphamari ..	(a) 12 8	(a) 12 8	12 0	12 10	(a) 12 10	13 0	12 8K	12 8K	12 8K
33 Bogra—Sadar ..	(a) 12 12	(a) 12 12	11 14	(a) 13 2	(a) 13 2	12 0	12 0C	12 0C	12 0C
Pabna—									
34 Sadar	(a) 12 0	(a) 12 0	11 0	(a) 12 8	(a) 12 8	11 8	14 8L 14 8K	14 8L 14 8K	14 0L 14 0K
35 Serajganj ..	10 0	10 8	12 0	10 8	11 0	12 4	16 0L 15 0K	16 0L 15 0K	16 0 15 0K
Malda—									
36 Sadar	(a) 12 0	(a) 13 0	11 8	(a) 12 8	(a) 14 0	12 0	14 0OK 13 0K	14 0OK 13 0K	14 8C 14 0K
37 Balia—Nawabganj	(a) 13 0	(a) 13 12	12 0	(a) 13 12	(a) 15 0	(n)	15 0OK 14 0K	15 0OK 14 0K	13 0C

P—Panga. K—Karkach. C—Crushed. L—Liverpool.

‡ Prices of Karkach, Crushed and Panga salt tally with each other.

(a) Now. OK—Okha and other Indian varieties. (b) Profuse supply.

(n) Not available.

Prices-current (retail) of common rice and salt in the districts of Bengal for the first half of April 1937.

Districts and Marts.	Quantity per rupee in seers of eighty tolas.								
	Common rice.						Salt.		
	Average.			Cheapest.					
	Present return	Next preceding return.	Corresponding return of last year.	Present return.	Next preceding return.	Corresponding return of last year.	Present return.	Next preceding return.	Corresponding return of last year.
	S. CH.	S. CH.	S. CH.	S. CH.	S. CH.	S. CH.	S. CH.	S. CH.	S. CH.
DACCA DIVISION.									
Dacca—									
38 Sadar ..	10 0	10 0	10 0	11 0	10 12	11 8	13 0C 13 0K	13 0C 13 0K	13 0C 13 0K
39 Mirkadim ..	10 0	11 0	11 0	11 8	11 8	11 8	16 0K	15 0K	15 8K
Mymensingh—									
40 Nasirabad ..	9 12	9 12	10 8	10 6	10 6	11 8	13 10L 13 10K	13 10L 13 10K	13 4L 13 0K
41 Netrakona ..	(a) 12 12	(a) 12 4	12 12	(a) 13 4	(a) 12 12	13 12	13 4L 12 4K	13 4L 13 0K	13 4L 12 12K
Faridpur—									
42 Sadar ..	10 0	12 0	11 12	10 8	12 8	12 4	12 0K	12 0K	13 0K
43 Rajbari ..	10 8	10 8	10 8	12 8	12 8	12 8	12 0C	12 0C	12 0C
Bakarganj—									
44 Barisal ..	(a) 10 8	10 10	11 2	(a) 11 8	11 8	11 14	15 0C 15 0K	15 0C 15 0K	14 0K
45 Perojpur ..	(a) 11 4	(a) 11 4	11 0	(a) 11 12	11 12	11 2	13 0C 13 0K	13 0C 13 0K	14 0C 14 0K
CHITTAGONG DIVISION.									
Tippera—									
46 Comilla ..	(a) 12 5	(a) 12 5	10 11	(a) 13 6	(a) 13 6	11 7	14 8C	14 8C	12 13L 10 10K
47 Chandpur ..	11 4	11 4	11 0	12 8	12 8	13 5	16 0C	16 0C	16 0
Noakhali—									
48 Kalitara Hat ..	10 0	10 0	10 0	12 0	12 0	11 0	13 0C 10 0K	13 0C 10 8K	13 0C 10 8K
49 Feni Hat ..	(a) 13 0	(a) 13 0	10 12	(a) 13 8	(a) 13 8	11 12	12 8C 10 8K	12 8C 10 8K	12 12C 10 0K
Chittagong—									
50 Sadar ..	10 0	10 0	10 0	11 8	11 8	11 0	13 0P	13 0P	14 0P
51 Cox's Bazar ..	11 0	10 8	11 0	12 0	11 8	13 0	13 0P	13 0P	13 0P
52 Chittagong Hill Tracts —Rangamati.	13 0	13 0	11 0	14 0	14 0	13 0	13 0L 8 0K	13 0L 8 0K	12 0L 6 4K

P—Panga. C—Crushed. K—Karkach. L—Liverpool.

(a) New.

Dacca, the 24th April 1937.

J. C. BASU, for *Director of Agriculture, Bengal.*

Vital statistics of towns with a population of 50,000 and over of the Bengal Presidency for the week ending Saturday, the 17th April 1937.

Districts.	Nos.	Towns.	Population under registration according to census of 1931.			Births registered.		Deaths registered.																								
			Male.	Female.	Total.	Number registered (excluding still-births).	Still-births registered.	Cholera.	Small-pox.	Plague.	Malaria.	Enteric fever.	Measles.	Relapsing-fever (Spirochaetal).	Kala-azar.	Influenza.	Cerebro-spinal fever.	Other fevers.	Dysentery.	Diarrhœa.	Pneumonia.	Pulmonary tuberculosis.	Other respiratory diseases.	Injuries including suicide.	Deaths from child-birth.	Other causes.	Total of all causes.			Total of corresponding week of the previous year.		
																											Male.	Female.	Total.	Male.	Female.	Total.
Calcutta ..	1	Calcutta	778,817	362,045	1,140,862	474	36	12	10	..	13	24	10	..	1	..	16	21	29	7	48	63	82	5	..	217	330	222	552	500	390	890
Burdwan ..	2	Asansol Mining Settlement.	209,544	173,136	382,680	282	4	4	1	..	2	1	..	..	..	..	..	72	7	3	16	2	9	1	2	81	115	86	201	55	57	112
Howrah ..	3	Howrah .	145,120	79,753	224,873	91	1	3	1	..	1	4	3	..	..	..	..	2	2	11	10	5	24	2	2	58	58	52	110	81	90	171
Dacca ..	4	Dacca ..	79,385	59,133	138,518	96	2	2	..	..	..	1	2	..	2	..	..	..	11	1	18	..	16	..	.	23	32	40	70	39	30	69
24-Parganas	5	Bhatpara ..	60,134	24,841	84,975	35	3	1	..	..	..	1	1	..	..	..	..	7	2	1	2	..	1	2	..	10	12	16	28	24	16	40
	6	Garden Reach	36,131	19,741	55,872	9	2	1	..	..	1	1	1	..	..	..	..	..	..	3	6	4	..	..	..	1	11	7	18	9	10	19
Chittagong ..	7	Chittagong	35,049	18,107	53,156	18	..	1	..	..	..	..	..	..	..	..	..	6	1	..	..	..	..	..	..	5	8	5	13	12	9	21

A. C. CHATTERJI, M.B., D.P.H., LT.-COL., I.M.S., *Director of Public Health, Bengal.*

Calcutta, the 23rd April 1937.

DEPARTMENT OF COMMUNICATIONS AND WORKS, IRRIGATION BRANCH, BENGAL.

Abstract statement showing the approximate volume of traffic and the tollage on canals in Bengal classed as Major Works and Minor Works and Navigation for the month of February 1937 as compared with the corresponding month of the previous year :—

Canals.	1936-37.					
	Weight of cargo.		Rafts.		Tollage.	
	During the month.	To end of the month.	During the month.	To end of the month.	During the month.	To end of the month.
	Tons.	Tons.	No.	No.	Rs.	Rs.
Major Works.						
Midnapore Canal	674	10,155	13,900	22,125	752	10,142
Hijili Tidal Canal	861	30,454	175	1,700	1,189	48,981
Total ..	1,535	40,609	14,075	23,825	1,941	59,123
Minor Works and Navigation.						
Calcutta and Eastern Canals ..	36,084	355,876	40,121	407,399	23,083	2,28,753
Tolly's Nala	18,003	260,941	32,930	375,433	6,528	80,942
Madaripur Bil Route	7,319	592,376	18,500	53,288	5,757	1,62,684
Total ..	61,406	1,209,193	91,551	836,120	35,368	4,72,379
Magrahat Channels	7,524	38,125	3,315	8,124	2,067	20,765
Orissa Coast Canal	1,142	28,574	3,425	11,700	877	25,025
GRAND TOTAL ..	70,072	1,275,892	98,291	855,944	39,212	5,18,169

Canals.	1935-36.					
	Weight of cargo.		Rafts.		Tollage.	
	During the month.	To end of the month.	During the month.	To end of the month.	During the month.	To end of the month.
	Tons.	Tons.	No.	No.	Rs.	Rs.
Major Works.						
Midnapore Canal	679	9,094	9,000	24,500	871	11,156
Hijili Tidal Canal	1,862	35,315	325	775	2,842	56,378
Total ..	2,541	44,409	9,325	25,275	3,713	67,534
Minor Works and Navigation.						
Calcutta and Eastern Canals ..	10,197	314,507	16,883	288,168	5,885	2,05,865
Tolly's Nala	23,849	250,491	36,906	380,270	6,938	77,409
Madaripur Bil Route	5,518	525,247	18,095	45,606	4,799	1,45,593
Total ..	39,564	1,090,245	71,884	714,044	17,622	4,28,867
Magrahat Channels	5,548	36,964	2,320	14,166	2,426	20,701
Orissa Coast Canal	2,196	34,318	2,900	7,262	2,062	28,977
GRAND TOTAL ..	47,308	1,161,527	77,104	735,472	22,110	4,78,545

Canal.	February, 1937.			
	Tollage, 1936-37.		Tollage, 1935-36.	
	During the month.	To end of the month.	During the month.	To end of the month.
	Rs.	Rs.	Rs.	Rs.
Sundarbans Steamer Route ..	5,230	69,072	4,488	57,212

J. F. RUSSELL,

Personal Assistant to the Chief Engineer to the Government of Bengal.

Calcutta, the 24th April 1937.

CORPORATION OF CALCUTTA.

Central Municipal Office, the 29th April 1937.

NOTICE.

In compliance with the provisions of section 481 of the Calcutta Municipal Act, 1923, it is hereby notified for general information that the Corporation of Calcutta propose to make the following bye-laws under clause 20 of section 478, regarding the provision of approach roads over footpaths of public streets:—

(*1*) No person shall either permanently or temporarily ride or drive or permit to ride or drive a horse or any carriage, cart, car or any other vehicle whatsoever over or across the footpath of a public street, except through an approach road to be provided for the purpose as hereinafter specified

(*2*) The owner or occupier of any premises abutting on the footpath of a public street shall for the purposes aforesaid at his own cost provide an approach road or roads in front of his premises in the manner laid down in clauses 4 to 10 below.

(*3*) The owner or occupier of any premises abutting on the footpath of public street shall ordinarily be entitled to one approach road in front of his premises. In special cases two approach roads may be allowed at the discretion of the District Engineer concerned, provided that there shall be between such approach roads a space of not less than 30 feet. In the special circumstances of any case, the Chief Executive Officer may allow a larger number of approach roads

(*4*) Every person who intends to construct an approach road or roads shall apply to the District Engineer of the Corporation in the printed form (to be supplied free of charge) prescribed by the Corporation.

(*5*) Such application shall be accompanied by a plan in triplicate drawn to a scale of 8 feet to the inch showing—

(*a*) the full frontage of the premises to which the approach road or roads is or are required and the neighbouring premises on either side thereof abutting on the footpath of the public street showing all openings thereon,

(*b*) the width of the entrance gate or door in front of which the approach road is intended to be constructed,

(*c*) the width of the footpath and the street on which the premises abut.

(*6*) Within a month from the date of receipt of an application under bye-law No. 4, the District Engineer shall either communicate his approval to the work being done or refuse the application. In the event of communicating his approval, the District Engineer shall prepare and send to the applicant an estimate of the cost to be incurred for the construction of the approach road or roads and shall require the applicant to deposit the amount mentioned therein in the office of the District Engineer within two weeks from the date of intimation of approval.

(*7*) On the amount of costs being deposited, the District Engineer shall proceed to construct the approach road according to the sanctioned plan. In the event of the owner's failure to deposit the cost, or in case he signifies his unwillingness to have the work done, the District Engineer shall have power to demand from him Rs. 2 or any other sum as is, or may be, prescribed by the Corporation for supplying rates for constructional works to be done by the Corporation on others' behalf, and the owner shall be bound to pay the same

(*8*) The width of the approach road shall ordinarily be equal to that of the entrance gate or door to which it leads, provided the District Engineer may permit a greater or smaller width according as the nature and condition of the site may require, and provided also that in no case should the width of the approach road exceed 16 feet.

(*9*) The approach road shall have a fall or inclination towards the street depending on the width of the footpath across which it runs, and shall have such gradient as the District Engineer may decide, having regard to the nature and condition of the site.

(*10*) The owner or occupier of the premises to which the approach road is attached shall maintain and keep the same in proper repairs.

(*11*) An approach road, which, in the opinion of the District Engineer, is no longer necessary, shall be removed by the owner or occupier of the premises, whenever called upon to do so The decision of the District Engineer on the question of necessity shall be final.

(*12*) If it appears to the District Engineer that the footpath in front of any premises is used or is intended to be used as a roadway for riding or driving a horse or any carriage, cart or car or any other vehicles to the said premises and by any such act the kerb and channel stones are being damaged or are likely to be damaged either temporarily or permanently, he may, by written notice, require the owner or the occupier of such premises to have an approach road constructed in accordance with these bye-laws.

(*13*) If such notice be not complied with within a week, the District Engineer may cause such approach road to be constructed as may, in his opinion, be necessary, and the expenses thereof shall be paid by the person or by any of the persons on whom such notice was served. If the footpath or the kerb and channel stones, as the case may be, are already damaged, and no construction be found necessary, the District Engineer shall have power to demand such compensation as may be payable under the rates in force for restoring the footpath or the kerb and channel stones to its or their original condition.

(*14*) The District Engineer may cause such approach road to be constructed whether or not the person who has failed to comply with the notice is liable to punishment or has been prosecuted or sentenced to any punishment for such failure.

(*15*) Any person who commits a breach of any of the foregoing bye-laws shall be punishable with a fine which may extend to Rs. 50 and in case of a continuing breach, with fine which may extend to Rs. 10 for every day during which the breach continues after conviction for the first breach.

(*Vide* bye-law No. 4 above.)

Form No.....

CORPORATION OF CALCUTTA.

Application for sanction to the construction of an approach road or roads under bye-laws framed under section 478 (20) of the Calcutta Municipal Act, 1923.

To

The District Engineer, District No.....Corporation of Calcutta.

Sir,

I or We beg to submit herewith an application for permission to construct an approach road/roads over the footpath in front of premises No.....and enclose herewith complete plans in triplicate, as required under clause 5 of the bye-laws.

I or We beg to request that the work be done by the Corporation at my or our cost. I or We shall deposit the estimated amount on being intimated of your approval, subject to adjustment on completion.

I or We agree to abide by the bye-laws of the Corporation for the construction of approach roads.

Yours faithfully,

Signature of the owner or occupier.....

Address.....

Dated.....*193* .

A printed copy of the bye-laws is open to public inspection free of charge. It may also be purchased on payment of a fee of annas two from the Central Record Keeper, Central Municipal Office, on any working day between the hours of 12 and 3 p.m.

Any person having any objection to the proposed bye-laws should submit the same on or before the 29th May 1937, after which date the proposed bye-laws will be further proceeded with.

S. CHATTERJEE,
Chief Executive Officer (offg.).

CORPORATION OF CALCUTTA.

Central Municipal Office, the 23rd April 1937.

Statement showing the accounts of the Sinking Funds of the Corporation of Calcutta for the year 1935-36 prepared under section 115 of the Calcutta Municipal Act, 1923.

Serial No.	Particulars	Amount invested during the year under section 112.	Date of the last investment made previous to 31st March 1936	Aggregate amount of the securities in the hands of the Corporation on 31st March 1936	Aggregate amount up to 31st March 1936, applied under section 114 in or towards repaying loans	Remarks
		Rs.		Rs	Rs	
1	Sinking Fund established under section 108 of the Calcutta Municipal Act, 1923.	6,76,800	25th March 1936.	71,24,300	1,37,12,164	
2	Sinking Fund for repayment of 4 per cent Calcutta Municipal Debenture Loan of 1914-15.	93,800	30th March 1936	12,81,700	Nil	
3	Sinking Fund for repayment of 5½ per cent Calcutta Municipal Debenture Loan of 1918 19	50,100	25th March 1936	5,66,300	Nil	
4	Sinking Fund for repayment of 5½ per cent Calcutta Municipal Debenture Loan of 1919-20, dated 1st July 1919	24,100	Do .	2,71,000	Nil	
5	Sinking Fund for repayment of 5½ per cent Calcutta Municipal Debenture Loan of 1919 20, dated 1st January 1920, having a currency of 17 years	68,300	Do	7,25,900	Nil	
6	Sinking Fund for repayment of 5½ per cent Calcutta Municipal Debenture Loan of 1919 20, dated 1st January 1920, having a currency of 30 years	57,900	Do	6,35,700	Nil	
7	Sinking Fund for repayment of 6½ per cent Calcutta Municipal Debenture Loan of 1920-21, dated 1st October 1920	84,000	Do .	8,77,000	Nil	
8	Sinking Fund for repayment of 6½ per cent Calcutta Municipal Debenture Loan of 1920 21, dated 1st December 1920	1,53,000	Do	15,99,700	Nil	
9	Sinking Fund for repayment of 6½ per cent Calcutta Municipal Debenture Loan of 1921-22, dated 1st April 1921	42,300	Do. ..	4,32,700	Nil	
10	Sinking Fund for repayment of 6½ per cent Calcutta Municipal Debenture Loan of 1921-22, dated 1st October 1921, for 17 years	81,500	Do ..	8,33 000	Nil	
11	Sinking Fund for repayment of 6½ per cent Calcutta Municipal Debenture Loan of 1921-22, dated 1st October 1921, for 30 years	65,300	Do	6 55 100	Nil	
12	Sinking Fund for repayment of 6 per cent Calcutta Municipal Sterling Debenture Loan of 1922-23	1,11,300 +£2,200	30th March 1936	6,01,000 +£76 600	Nil	
13	Sinking Fund for repayment of 6½ per cent Calcutta Municipal Debenture Loan of 1924-25 dated 1st November 1924	22,800	25th March 1936	1 95 500	Nil	
14	Sinking Fund for repayment of 6½ per cent Calcutta Municipal Debenture Loan of 1924-25, dated 1st January 1925	78,700	Do	6,48,300	Nil	
15	Sinking Fund for repayment of 6 per cent Calcutta Municipal Debenture Loan of 1925-26	1,98,000	30th March 1936	16,06,100	Nil	
16	Sinking Fund for repayment of 5 per cent Calcutta Municipal Debenture Loan of 1928 29, dated 1st November 1928	75,000	25th March 1936	4 77 900	Nil	
17	Sinking Fund for repayment of 5 per cent Calcutta Municipal Debenture Loan of 1929-30, dated 1st August 1929, for 28 years	58,800	Do	3,43,000	Nil	
18	Sinking Fund for repayment of 5 per cent Calcutta Municipal Debenture Loan of 1929-30, dated 1st August 1929, for 29 years	56,100	Do	3,23,600	Nil	
19	Sinking Fund for repayment of 6½ per cent Calcutta Municipal Debenture Loan of 1930 31, dated 1st February 1931, for 19—29 years	66,900	Do ..	2,96,100	Nil	
20	Sinking Fund for repayment of 6½ per cent Calcutta Municipal Debenture Loan of 1930 31, dated 1st February 1931, for 20—30 years	60,200	Do .	2,72,100	Nil	
21	Sinking Fund for repayment of 6 per cent Calcutta Municipal Debenture Loan of 1931 32, dated 1st July 1931	14,700	Do .	59,900	Nil	
22	Sinking Fund for repayment of 6½ per cent Calcutta Municipal Debenture Loan of 1931-32, dated 1st March 1932	23,600	30th March 1936	86 700	Nil	
23	Sinking Fund for repayment of 6 per cent Calcutta Municipal Debenture Loan of 1932-33, dated 1st August 1932, for 17 years	36,100	25th March 1936	1 17,800	Nil	
24	Sinking Fund for repayment of 5½ per cent Calcutta Municipal Debenture Loan of 1932-33, dated 1st October 1932, for 30 years	20 000	Do	57 100	Nil	
25	Sinking Fund for repayment of 4½ per cent Calcutta Municipal Debenture Loan of 1933 34, dated 1st June 1933, for 17 years	37,000	Do	88,800	Nil	
26	Sinking Fund for repayment of 4 per cent Calcutta Municipal Debenture Loan of 1933-34, dated 1st October 1933 for 17 years	71,900	Do .	1,43,100	Nil	
27	Sinking Fund for repayment of 3½ per cent Calcutta Municipal Debenture Loan of 1934-35, dated 1st December 1934	72,600	23rd January 1936	72,600	Nil	
28	Sinking Fund for repayment of 3½ per cent Calcutta Municipal Debenture Loan of 1935-36, dated 1st July 1935	35,200	23rd February 1936	35,200	Nil	
	Total ..	24,30,000 +£2,200		2,04,28 400 +£76,600	1,37,12,164	

N. N. BOSE, *Chief Accountant.*

S. CHATTERJEE,
Chief Executive Officer (offg.).

DAILY RAINFALL RECORDED IN BENGAL

Note.—The total and the average rainfall for all districts have been

Division and district.	Station.	1	2	3	4	5	6	7
Presidency.								
24-Parganas ..	Saugar Island (Obsy.) ..	..	..	..	..	..	..	..
	Diamond Harbour ..	..	..	..	..	..	..	..
	Budge-Budge	..	..	..	..	..	..	..
	Canning Town	..	..	..	..	..	..	..
	Alipore (Obsy.)	..	..	..	..	..	..	..
	Barrackpore	..	..	..	..	..	..	..
	Dum Dum	..	..	..	..	..	..	..
	Baraset	..	..	..	..	..	..	..
	Basirhat	..	..	..	..	..	..	..
	Gosaba	..	..	..	..	..	..	..
Nadia ..	Ranaghat*							
	Krishnagar (Obsy.) ..	..	..	..	..	..	..	..
	Chuadanga	..	..	..	..	..	..	..
	Meherpur	..	..	..	..	..	..	..
	Kushtia	..	..	..	..	..	..	..
	Haringhata	..	..	..	..	..	..	..
Murshidabad ..	Kandi	..	..	..	..	..	..	..
	Berhampur (Obsy.) ..	..	..	..	..	0·07	..	..
	Lalbagh	..	..	..	..	..	..	..
	Azimganj	..	..	..	..	..	..	..
	Jangipur	..	..	..	..	..	..	..
	Lalgola	..	..	..	..	..	..	..
	Akriganj	..	..	..	..	..	..	..
	Patkabari	..	..	..	..	..	..	..
	Dumkal	..	..	..	..	0·51	..	..
	Kallyanganj (Ishanpur) ..	..	..	..	..	..	..	..
	Khargram	..	..	..	..	..	..	..
	Bharatpur	..	..	..	..	..	..	..
Jessore ..	Narail	..	..	..	..	..	..	..
	Jessore (Obsy.)	..	..	..	..	..	..	..
	Jhenida	..	..	..	..	..	..	..
	Magura	..	..	..	..	..	..	..
	Bongaon	..	..	..	..	..	..	..
Khulna ..	Satkhira (Obsy.)	..	..	..	..	..	..	..
	Bagerhat	..	..	..	..	..	..	..
	Khulna (Obsy.)	..	..	..	..	..	..	..
	Kaliganj	..	..	..	..	..	..	..
	Nakipur*							
	Dumuria	..	..	..	..	..	..	..
	Rampal	..	..	..	..	..	..	..
	Kalaroa	..	..	..	..	..	..	..
	Paikgachha (Raruli) ..	..	..	..	..	..	..	..
	Mollahat	..	..	..	..	..	..	..
	Morelganj	..	..	..	..	..	..	..
	Islamkati	..	..	..	..	..	..	..
Burdwan.								
Burdwan ..	Kalna	..	..	..	..	..	..	..
	Burdwan (Obsy.) ..	..	..	..	..	..	..	..
	Katwa	..	..	..	..	..	..	..
	Asansol (Obsy.) ..	..	..	..	..	..	..	..
	Mankar	..	..	..	..	..	..	..
	Mangalkot	..	..	..	..	..	..	..
	Royna	..	..	..	..	..	..	..
	Monteswar	..	..	..	..	..	..	..
Birbhum ..	Suri	..	..	..	..	..	..	..
	Hetampur	..	..	..	..	..	..	..
	Rampurhat	..	..	..	..	..	..	..
	Bolpur	..	..	..	..	..	..	..
	Murarai*							
	Labpur	..	..	..	..	..	..	..
	Nalhati*							
	Mayureswar	..	..	..	..	..	..	..

*Not reported.

FOR THE MONTH OF MARCH 1937.

calculated using the data of only those stations for which normals are available.

8	9	10	11	12	13	14	15	16	17	18	19	20
..	..	..	..	..	.	..	..	..	.	0·02	..	..
..	..	..	..	..	.	..	.	..	.	.	.	.
..	..	..	..	.	.	..	.	..		0·14	0·07	..
..	..	..	..	..	..	..	..	.	..	..	..	..
..	..	..	..	..	..	..	..	0·15	0·07	..	..	..
..	..	..	..	..	..	..	..	..	.	..	..	..
..	..	..	..	..	..	..	..	..	..	..	..	..
..	..	..	..	..	0·50	..	..	..	..	..	..	..
..	.	..	..	.	..	..	..	..	..	..	..	..
..	..	..	..	.	.	..	..	..	..	..	..	..
..	..	..	..	..	..	0·73	0·07	..	0·02	..	..	..
..	..	..	..	.	..	0·07	..	..	..	0·20	..	..
..	..	..	..	..	0·05	..	..	..	..	..	..	..
..	..	..	..	..	..	..	..	..	..	..	..	..
..	..	..	..	..	..	..	..	..	..	..	..	..
..	..	..	..	..	..	..	..	..	..	..	..	..
..	..	..	..	..	..	..	..	0·03	..	..	..	..
..	..	..	..	..	..	..	..	..	..	..	..	..
..	..	..	..	..	..	..	..	..	..	.	.	.
..	..	.	..	..	..	..	..	..	..	..	..	..
..	..	..	..	..	..	..	..	..	..	..	..	..
..	..	..	..	..	..	..	..	..	0·02	.	..	..
..	..	..	..	..	..	0·17	..	..	..	..	..	..
..	..	..	..	..	..	..	..	..	..	..	..	..
..	..	..	..	..	..	..	..	..	..	..	..	.
..	..	..	..	..	..	..	..	..	0·05	..	..	..
..	..	..	..	..	..	..	..	..	..	..	..	..
..	..	..	..	..	..	..	..	..	..	..	..	..
..	..	..	..	..	..	0·17	..	..	..	..	..	..
..	..	..	..		..	0·05	..	..	0·75	..	..	..
..	..	..	..	..	..	..	..	..	..	.	..	..
..	..	..	..	..	..	..	..	..	..	..	..	..
..	..	..	..	..	..	..	..	..	0·02	..	..	..
..	..	..	..	..	..	..	..	0·10	..	..	..	..
..	..	.	..	..	.	..	..	..	0·06	0·04	..	..
..	..	..	..	..	..	..	..	..	..	..	..	..
..	..	..	..	..	..	0·35	..	..	..	..	..	..
..	..	..	.	..	..	..	..	0·25	.	..	..	..
..	..	..	..	..	..	.	..	..	..	..	..	..
..	..	..	..	..	..	..	..	..	..	..	..	..
..	..	..	..	..	..	..	..	..	..	..	..	..
..	..	..	..	..	..	..	..	..	..	..	..	..
..	..	..	..	..	..	..	..	..	..	..	..	..
..	..	..	..	..	..	..	0·30	..	0·03	..	..	.
..	..	..	..	..	..	0·12	..	..	..	..	..	..
.	..	..	..	..	..	..	..	..	..	.	..	..
..	..	..	..	..	..	..	..	..	..	..	..	..
..	..	..	0·70	..	..	..	..	..	..	..	..	..
..	..	..	..	..	.	.	.	..	..	..	..	..
..	..	..	..	0·90	..	..	..	0·04	..	..	..	..
..	.	..	..	..	0·14	..	..	..	..	..	..	..
..	..	..	..	..	..	0·06	..	..	..	..	..	..
..	..	..	..	..	..	..	..	..	..	..	..	..
.	..	..	..	..	..	..	..	..	..	..	..	..
.	..	.	..	..	..	..	..	..	..	..	..	..
..	..	.	..	..	..	..	..	..	..	..	..	..

DAILY RAINFALL RECORDED IN BENGAL

Division and district.	Station.	21	22	23	24	25	26	27
Presidency.								
24-Parganas ..	Saugar Island (Obsy.) ..	0·15	..	..	0·16	..	..	..
	Diamond Harbour ..	..	..	..	..	..	0·05	..
	Budge-Budge ..	0·63	..	..	0·05	..	..	..
	Canning Town	..	..	..	..	..	..	..
	Alipore (Obsy.)	0·09	..	..	0·07	..	..	..
	Barrackpore	..	..	..	..	..	..	..
	Dum Dum	..	..	..	..		..	..
	Baraset	..	..	..	..	..	..	..
	Basirhat	0·12	..	..	..	..	..	..
	Gosaba	..	..	..	..	..	..	..
Nadia ..	Ranaghat*							
	Krishnagar (Obsy.) ..	..	..	..	..	..	..	..
	Chuadanga	..	..	..	..	..	..	..
	Meherpur	..	..	..	..	..	..	..
	Kushtia	..	..	..	..	..	..	..
	Haringhata	..	..	..	..	..	..	..
Murshidabad ..	Kandi	..	..	..	..	..	..	..
	Berhampore (Obsy.) ..	..	..	..	..	..	..	..
	Lalbagh	..	..	..	..	..	..	..
	Azimganj	..	..	..	..	..	..	..
	Jangipur	..	..	..	..	..	..	..
	Lalgola	..	..	..	..	..	..	..
	Akriganj	..	..	..	..	..	..	..
	Patkabari	..	..	..	..	..	..	..
	Dumkal	..	..	..	..	..	..	..
	Kallyanganj (Ishanpur) ..	..	..	..	..	..	..	..
	Khargram	..	..	..	..	..	..	..
	Bharatpur	..	..	..	..	..	..	..
Jessore ..	Narail	..	..	..	..	..	..	..
	Jessore (Obsy.)	..	..	..	..	..	..	..
	Jhenida	..	..	..	..	..	..	..
	Magura	..	..	..	..	..	..	..
	Bongaon	..	..	..	..	..	..	..
Khulna ..	Satkhira (Obsy.)	0·10	..	..	..	..	..	..
	Bagerhat	..	..	..	..	..	..	..
	Khulna (Obsy.)	..	..	..	..	..	..	..
	Kaliganj	..	..	..	..	..	..	..
	Nakipur*							
	Dumuria	..	..	..	..	..	..	..
	Rampal	..	..	..	..	..	..	..
	Kalaroa	..	..	..	..	..	..	..
	Paikgachha (Raruli) ..	..	..	..	..	..	..	..
	Mollahat	..	..	..	..	..	..	..
	Morelganj	..	..	..	..	..	..	..
	Islamkati	..	..	..	..	..	..	..
Burdwan.								
Burdwan ..	Kalna	..	..	..	..	..	..	..
	Burdwan (Obsy.)	..	..	..	..	..	..	..
	Katwa	..	..	..	..	..	..	..
	Asansol (Obsy.)	..	..	..	..	..	..	..
	Mankar	..	..	..	..	..	..	..
	Mangalkot	..	..	..	..	..	..	..
	Royna	..	..	..	..	..	..	..
	Monteswar	..	..	..	..	..	..	..
Birbhum ..	Suri	..	..	..	..	..	..	..
	Hetampur	..	..	..	..	..	..	..
	Rampurhat	..	..	..	..	..	..	..
	Bolpur	..	..	..	..	..	..	..
	Murarai*							
	Labpur	..	..	..	..	..	..	..
	Nalhati*							
	Mayureswar	..	..	..	..	..	..	..

*Not reported.

FOR THE MONTH OF MARCH 1937.

28	29	30	31	Number of rainy days.	Average number of rainy days.	Total rainfall for the month.	Normal rainfall for the month.	Heaviest rainfall during the month.	Total rainfall from 1st to 31st March 1937.	Normal rainfall from 1st to 31st March 1937.
..	..	..	..	2	2·0	0·33	1·43	0·16	0·33	1·43
..	..	..	..	Nil	2·2	0·05	1·66	0·05	0·05	1·66
0·02	..	..	..	2	2·7	1·21	1·85	0·63	1·21	1·85
..	..	..	..	Nil	2·2	Nil	1·71	Nil	Nil	1·71
..	..	..	..	1	2·4	0·38	1·44	0·15	0·38	1·44
..	..	..	..	Nil	2·6	Nil	1·65	Nil	Nil	1·65
..	..	..	..	Nil	2·3	Nil	1·49	Nil	Nil	1·49
..	..	..	..	1	2·3	0·50	1·48	0·50	0·50	1·48
..	..	..	..	1	2·5	0·12	1·66	0·12	0·12	1·66
..	..	..	..	Nil	(n)	Nil	(n)	Nil	Nil	(n)
					2·5		1·64			1·64
..	..	..	..	1	2·4	0·82	1·82	0·73	0·82	1·82
..	..	..	..	1	2·6	0·27	1·75	0·20	0·27	1·75
..	..	..	..	Nil	2·5	0·05	1·67	0·05	0·05	1·67
..	..	..	..	Nil	2·7	Nil	1·50	Nil	Nil	1·50
..	..	..	..	Nil	2·0	Nil	1·37	Nil	Nil	1·37
..	..	..	..	Nil	2·0	Nil	1·17	Nil	Nil	1·17
..	..	..	..	Nil	2·0	0·10	1·07	0·07	0·10	1·07
..	..	..	..	Nil	1·9	Nil	1·02	Nil	Nil	1·02
..	..	..	..	Nil	1·7	Nil	0·96	Nil	Nil	0·96
..	..	..	..	Nil	2·0	Nil	0·81	Nil	Nil	0·81
..	..	..	..	Nil	1·7	Nil	0·91	Nil	Nil	0·91
..	..	..	..	Nil	1·7	0·02	1·02	0·02	0·02	1·02
..	..	..	..	1	1·5	0·17	0·84	0·17	0·17	0·84
..	..	..	..	1	2·1	0·51	1·32	0·51	0·51	1·32
..	..	..	..	Nil	2·2	Nil	1·12	Nil	Nil	1·12
..	..	..	..	Nil	(n)	0·05	(n)	0·05	0·05	(n)
..	..	..	..	Nil	(n)	Nil	(n)	Nil	Nil	(n)
..	..	..	..	Nil	3·0	Nil	1·98	Nil	Nil	1·98
..	..	..	..	1	3·2	0·17	2·11	0·17	0·17	2·11
..	..	..	..	1	2·9	0·80	2·09	0·75	0·80	2·09
..	..	..	..	Nil	3·2	Nil	2·04	Nil	Nil	2·04
..	..	..	..	Nil	2·6	Nil	1·81	Nil	Nil	1·81
..	..	..	..	1	2·2	0·12	1·32	0·10	0·12	1·32
..	..	..	..	1	2·6	0·10	1·95	0·10	0·10	1·95
..	..	..	..	Nil	2·5	0·10	2·40	0·06	0·10	2·40
..	..	..	..	Nil	2·0	Nil	1·80	Nil	Nil	1·80
					1·9		1·59			1·59
..	..	..	..	1	2·7	0·35	1·91	0·35	0·35	1·91
..	..	..	..	1	3·0	0·25	1·94	0·25	0·25	1·94
..	..	..	..	Nil	2·8	Nil	2·45	Nil	Nil	2·45
..	..	..	..	Nil	2·8	Nil	1·98	Nil	Nil	1·98
..	..	..	..	Nil	3·0	Nil	2·47	Nil	Nil	2·47
..	..	..	..	Nil	2·9	Nil	2·26	Nil	Nil	2·26
..	..	..	..	Nil	3·0	Nil	2·32	Nil	Nil	2·32
..	..	..	..	Nil	2·5	Nil	1·56	Nil	Nil	1·56
..	..	..	..	1	2·6	0·33	1·67	0·30	0·33	1·67
..	..	..		1	2·3	0·12	1·34	0·12	0·12	1·34
..	..	..	..	Nil	1·9	Nil	1·05	Nil	Nil	1·05
..	..	..	..	Nil	1·9	Nil	1·32	Nil	Nil	1·32
..	..	..	..	1	2·7	0·70	2·35	0·70	0·70	2·35
..	..		..	Nil	2·5	Nil	2·08	Nil	Nil	2·08
..	..	..	..	1	1·7	0·94	1·69	0·90	0·94	1·69
..	..	..	..	1	1·9	0·14	1·04	0·14	0·14	1·04
..	..	..	..	Nil	1·8	0·06	0·93	0·06	0·06	0·93
..	..	..	..	Nil	1·4	Nil	0·89	Nil	Nil	0·89
..	..	..	..	Nil	1·7	Nil	0·98	Nil	Nil	0·98
					1·7		0·94			0·94
..	..	..	..	Nil	2·0	Nil	1·07	Nil	Nil	1·07
					(n)		(n)			(n)
..	..	..	..	Nil	(n)	Nil	(n)	Nil	Nil	(n)

(n) Not ascertained.

DAILY RAINFALL RECORDED IN BENGAL

Division and district.	Station.	1	2	3	4	5	6	7
Burdwan—*concld.*								
Bankura ..	Bankura (Obsy.)	..	..	..	..	..	..	..
	Vishnupur	..	..	..	..	..	..	..
	Maliara	..	..	..	..	..	..	..
	Khatra	..	..	..	..	..	..	..
	Indas	..	..	..	..	..	..	..
	Kotalpur	..	..	..	..	..	..	..
	Onda	..	..	..	..	..	..	..
	Gangajalghati	..	..	..	..	..	..	..
	Raipur	..	..	..	..	..	..	..
	Sonamukhi	..	..	..	..	..	..	..
	Taldangra	..	..	..	..	..	..	..
	Saranga	..	..	..	..	..	..	..
	Indpur	..	..	..	..	..	..	..
	Arhara	..	..	..	..	..	..	..
	Barjora	..	..	..	..	..	..	..
	Simlapal*							
	Mejhia	..	..	..	..	..	..	..
	Siromanipur	..	..	..	..	..	..	..
	Palasdanga*							
	Chatna*	..	..	..	..	..	..	..
	Ranibandh	..	..	..	..	..	..	..
	Saltora	..	..	..	..	..	..	..
	Joypur	..	..	..	..	..	..	..
	Ambikanagar*							
	Jairampur*	..	..	..	..	..	..	..
Midnapore ..	Contai	..	..	..	..	..	..	..
	Tamluk	..	..	..	..	..	..	..
	Midnapore (Obsy.) ..	..	..	..	..	..	..	..
	Ghatal	..	..	..	..	..	..	..
	Kukrahati	..	..	..	..	..	..	..
	Amlagura	..	..	..	..	..	..	..
	Panskura	..	..	..	..	..	..	..
	Dantan	..	..	..	..	..	..	..
	Chandrakona	..	..	..	..	..	..	..
	Pachet*	..	..	..	..	..	..	..
	Bhagwanpur	..	..	..	..	..	..	..
	Kashiary	..	..	..	..	..	..	..
	Nayabasan	..	..	..	..	..	..	..
	Silda (Belpahari)	..	..	..	..	..	..	..
	Goaltore	..	..	..	..	..	..	..
	Salboni	..	..	..	..	..	..	..
	Narayangarh	..	..	..	..	..	..	..
	Ramnagar	..	..	..	..	..	..	..
	Mohanpur*							
	Jenka (Khajri)	..	..	..	..	..	..	..
	Nandigram	..	..	..	..	..	..	..
	Moyna*							
	Pingla	..	..	..	..	..	..	..
	Narajole	..	..	..	..	..	0·20	..
	Kolaghat (Dainan) ..	..	..	..	..	..	..	..
	Balichak	..	..	..	..	..	..	..
	Jhargram	..	..	..	..	..	..	..
	Kharagpur	..	..	..	..	..	..	..
Hooghly ..	Serampore	..	..	..	..	..	..	..
	Hooghly	..	..	..	..	..	..	..
	Arambagh	..	..	..	..	..	..	..
	Chanditala*	..	..	..	..	..	..	..
	Tentulia	..	..	..	..	..	..	..
	Boinchee*	..	..	..	..	..	..	..
	Khanakul	..	..	..	..	..	..	..
	Tarakeswar	..	..	..	..	..	..	..
Howrah ..	Howrah	..	..	..	..	..	..	..
	Uluberia	..	..	..	..	..	..	..
	Amta	..	..	..	..	..	..	..
Rajshahi.								
Rajshahi ..	Boalia (Obsy.)	..	..	..	..	..	..	..
	Nator	..	..	..	..	..	..	..
	Naogaon	..	..	..	..	..	..	..
	Lalpur	..	..	..	..	..	..	..
	Manda	..	..	..	..	..	..	..
	Mahadebpur	..	..	..	..	..	..	..
	Tanor	..	..	..	..	..	..	..
	Chaugram	..	..	..	..	..	..	..
	Joari	..	..	..	..	..	..	..
	Badalgachi	..	..	..	..	..	..	..

*Not reported.

FOR THE MONTH OF MARCH 1937.

8	9	10	11	12	13	14	15	16	17	18	19	20
..	..	..	..	..		..	..	..	0·05	..	..	..
..	..	..	..	..	..	.		.	0·03	..	..	.
..	..	..	..	..	..	..	..	.		..	.	..
..	..	..	..	..	..	..	..	..	0·03	..	..	..
..	..	..	.	.	..	..	.	.	..	.	..	..
..	..	..	..		.	..	..		.		..	..
..	.	..	..	.	..	..	..	.	..		.	..
..	..	..	..	..	..	..	..	..		..		..
..	..	..	..	..	..	..	.	..	..	..	..	.
..	..	..	..	..	.	.	..	..	..	..	..	.
..	..	..	..	..	..	..	.	.	0·3	.	..	..
..	..	..	..	..	..	..	..		..	..	..	0·02
..	..	..	..	..	.	.	..	..	.	..	..	..
..	..	..	.	..	..	..	..	0·01	..	..	..	..
..	..	..	..	..	..	..	..	..	..	..	..	..
..	..	..	..	..	..	..	..	..	..	..	..	..
..	..	..	..	..	..	..	.	..	..	..	..	..
..	..	..	..	..	..	..	..	..	..	..	..	..
..	..	..	..	..	..	0·25	0·02	0·06	..	..	..	..
..	..	..	..	..	..	..	.	..	..	.	..	..
..	..	..	..	..	..	..	..	.	..	..	..	..
..	..	..	..	..	..	..	..	..	.	..	..	..
..	..	..	..	..	..	..	..	..	..	..	..	..
..	..	..	..	..	..	..	..	0·10	..	..	..	..
..	..	..	..	..	..	..	0·19	..	.	..	..	..
..	..	..	..	..	..	0·33	0·45	0·05	..	..	..	..
..	..	..	..	..	..	..	..	..	..	..	..	..
..	..	..	..	..	..	..	..	..	0·06	.	..	..
..	..	..	..	..	..	..	.	..	0·20	0·05	..	..
..	..	..	..	..	..	..	0·85	0·09	..	..	..	0·70
..	..	..	..	..	..	..	0·18	..	..	..	..	..
..	..	..	..	..	..	..	..	..	..	..	..	..
..	..	.	..	..	..	..	..	..	0·02	..	..	..
..	..	..	..	..	..	..	..	..	..	..	..	..
..	..	..	..	..	..	..	..	..	0·12	..	..	..
..	..	..	..	..	..	..	..	0·03	..	..	..	..
..	..	..	..	..	..	..	..	..	0·10	..	..	..
..	..	..	0·05	..	..	0·05	..	..	..	..	..	..
..	..	..	..	..	..	..	..	..	..	..	..	..
..	..	..	..	..	..	..	..	0·01	0·06	..	..	0·93
..	..	..	..	..	..	..	..	..	.	..	..	..
..	..	..	..	..	..	..	..	0·30	0·25	0·02	..	0·57
..	..	..	..	..	..	..	..	0·30	..	..	..	0·12
..	..	..	..	..	..	0·10	..	..	.	..	..	0·10
..	..	..	..	..	.	..	..	..	0·10	.	..	..
..	..	..	..	..	..	..	..	..	0·25	0·32	..	..
..	..	..	..	..	..	..	..	..	..	..	..	..
..	..	..	..	..	..	0·16	0·50	..	..	..	..	1·15
..	..	..	..	..	..	..	..	..	..	..	..	0·38
..	..	..	..	..	..	..	..	..	0·06	..	..	..
..	..	..	..	..	..	..	..	..	..	..	..	..
..	..	..	..	..	..	..	..	..	..	..	..	..
..	..	..	..	..	..	..	..	..	..	..	..	..
..	..	..	..	..	..	..	..	..	..	..	..	..
..	..	..	..	..	1·20	0·05	..	..	..	..	..	..
..	..	..	..	..	..	..	..	..	..	..	..	..
..	..	..	..	..	..	..	..	0·11	0·03	..	..	..
..	..	..	..	..	..	..	..	0·80	0·10	..	..	..
..	..	..	..	..	..	..	..	0·33	..	..	..	..
..	..	..	..	..	..	..	..	..	..	..	..	..
..	..	..	..	..	..	..	..	..	..	..	..	..
..	..	..	..	..	..	..	..	..	..	..	..	..
..	..	..	..	..	..	..	..	..	..	..	..	..
..	..	..	..	..	..	..	..	..	..	..	..	..
..	..	..	..	..	..	..	..	..	..	..	..	..
..	..	..	..	..	..	..	..	..	..	..	..	..
..	..	..	..	..	..	..	..	..	..	..	..	..
..	..	..	..	..	..	..	..	..	..	..	..	..
..	..	..	..	..	..	..	..	..	..	..	..	..
..	..	..	..	..	..	..	..	..	..	..	..	..
..	..	..	..	..	..	..	..	..	..	..	..	..
..	..	..	..	..	..	..	..	..	..	..	..	..

DAILY RAINFALL RECORDED IN BENGAL

Division and district.	Station.	21	22	23	24	25	26	27
Burdwan—*concld.*								
Bankura ..	Bankura (Obsy.) ..	..	..	..	..	..	..	..
	Vishnupur	..	..	..	..	..	..	..
	Maliara	..	..	..	..	..	..	..
	Khatra	..	..	..	..	..	..	..
	Indas	..	..	..	..	..	..	..
	Kotalpur	..	..	..	..	..	..	..
	Onda	..	..	..	..	..	..	..
	Gangajalghati	..	..	..	..	..	..	..
	Raipur	..	..	..	..	..	..	..
	Sonamukhi	..	..	..	..	..	..	..
	Taldangra	..	..	..	..	..	..	..
	Saranga	..	..	..	..	..	..	..
	Indpur	..	..	..	..	..	..	..
	Arhara	..	..	..	..	..	..	..
	Barjora	..	..	..	..	..	..	..
	Simlapal*	..	..	..	..	..	..	..
	Mejhia	..	..	..	..	..	..	..
	Siromanipur	..	..	..	..	..	..	..
	Palasdanga*	..	..	..	..	..	..	..
	Chatna*	..	..	..	..	..	..	..
	Ranibandh	..	..	..	..	..	..	..
	Saltora	..	..	..	..	..	..	..
	Joypur	..	..	..	..	..	..	..
	Ambikanagar*	..	..	..	..	..	..	..
	Jairampur*	..	..	..	..	..	..	..
Midnapore ..	Contai	..	..	0·96	..	..	..	..
	Tamluk	..	..	0·16	..	..	..	..
	Midnapore (Obsy.) ..	..	..	..	0·31	..	..	..
	Ghatal	..	..	..	..	..	..	..
	Kukrahati	..	..	..	0·25	..	..	..
	Amlagura	..	..	..	..	..	..	..
	Panskura	0·05	..	..	..	..	..	..
	Dantan	..	..	0·29	..	..	..	..
	Chandrakona	..	..	0·12	..	..	..	..
	Pachet*	..	..	..	..	..	..	..
	Bhagwanpur	..	..	..	..	..	..	..
	Kashiary	..	..	..	..	..	..	..
	Nayabasan	0·36	..	..	0·95	..	..	..
	Silda (Belpahari)	..	..	..	..	..	..	..
	Goaltore	..	..	..	0·13	..	..	..
	Salboni	..	..	..	0·12	..	..	..
	Narayangarh	..	..	0·28	..	..	..	..
	Ramnagar	..	..	..	..	..	..	..
	Mohanpur*	..	..	..	..	..	..	..
	Jenka (Khajri)	..	..	..	..	..	..	..
	Nandigram	..	..	..	..	..	..	..
	Moyna*	..	..	..	..	..	..	..
	Pingla	..	..	0·25	..	..	..	..
	Narajole	..	..	..	..	..	..	..
	Kolaghat (Dainan) ..	0·26	..	..	0·06	..	..	..
	Balichak	0·30	..	..	..	..	..	..
	Jhargram	0·41	..	..	0·47	..	..	..
	Kharagpur	..	..	0·16	..	..	..	..
Hooghly ..	Serampore	..	..	0·35	..	..	..	..
	Hooghly	..	..	..	..	..	..	..
	Arambagh	..	..	..	..	..	..	..
	Chanditala*	..	..	..	..	..	..	..
	Tentulia	..	..	..	..	..	..	..
	Boinchee*	..	..	..	..	..	..	..
	Khanakul	..	..	..	..	..	..	..
	Tarakeswar	..	..	..	..	..	..	..
Howrah ..	Howrah	0·07	..	..	..	..	..	..
	Uluberia	1·06	..	..	..	..	..	..
	Amta	0·94	..	..	..	..	..	..
Rajshahi.								
Rajshahi ..	Boalia (Obsy.)	..	..	..	..	..	..	..
	Nator	..	..	..	..	..	..	..
	Naogaon	..	..	..	..	..	..	..
	Lalpur	..	..	..	..	..	..	..
	Manda	..	..	..	..	..	..	..
	Mahadebpur	..	..	..	..	..	..	..
	Tanor	..	..	..	..	..	..	..
	Chaugram	..	..	..	..	..	..	..
	Joari	..	..	..	..	..	..	..
	Badalgachi	..	..	..	..	..	..	..

*Not reported.

FOR THE MONTH OF MARCH 1937.

28	29	30	31	Number of rainy days.	Average number of rainy days.	Total rainfall for the month.	Normal rainfall for the month.	Heaviest rainfall during the month.	Total rainfall from 1st to 31st March 1937.	Normal rainfall from 1st to 31st March 1937.
..	..	..	..	Nil	2·2	0·05	1·25	0·05	0·05	1·25
..	..	..	..	Nil	2·5	0·03	1·39	0·03	0·03	1·39
..	..	..	..	Nil	2·1	Nil	0·99	Nil	Nil	0·99
..	..	..	..	Nil	2·0	0·03	1·18	0·03	0·03	1·18
..	..	..	..	Nil	2·2	Nil	1·32	Nil	Nil	1·32
..	..	..	..	Nil	2·1	Nil	1·68	Nil	Nil	1·68
..	..	..	..	Nil	2·3	Nil	0·98	Nil	Nil	0·98
..	..	..	..	Nil	2·0	Nil	1·12	Nil	Nil	1·12
..	..	..	..	Nil	2·0	Nil	1·41	Nil	Nil	1·41
..	..	..	..	Nil	2·2	Nil	1·37	Nil	Nil	1·37
..	..	..	..	Nil	1·8	0·03	1·05	0·03	0·03	1·05
..	..	..	..	Nil	1·8	0·02	0·92	0·02	0·02	0·92
..	..	..	..	Nil	1·7	Nil	1·04	Nil	Nil	1·04
..	..	..	..	Nil	(n)	0·01	(n)	0·01	0·01	(n)
..	..	..	..	Nil	(n)	Nil	(n)	Nil	Nil	(n)
..	..	..	..		(n)		(n)			(n)
..	..	..	..	Nil	(n)	Nil	(n)	Nil	Nil	(n)
..	..	..	..	Nil	(n)	Nil	(n)	Nil	Nil	(n)
..	..	..	..		(n)		(n)			(n)
..	..	..	..		(n)		(n)			(n)
..	..	..	..	1	(n)	0·33	(n)	0·25	0·33	(n)
..	..	..	..	Nil	(n)	Nil	(n)	Nil	Nil	(n)
..	..	..	..	Nil	(n)	Nil	(n)	Nil	Nil	(n)
..	..	..	..		(n)		(n)			(n)
..	..	..	..		(n)		(n)			(n)
..	..	..	..	1	2·1	0·96	1·38	0·96	0·96	1·38
..	..	..	..	2	2·5	0·26	1·78	0·16	0·26	1·78
..	..	..	..	2	2·5	0·50	1·43	0·31	0·50	1·43
..	..	..	..	2	2·6	0·83	1·65	0·45	0·83	1·65
..	..	..	..	1	2·3	0·25	1·67	0·25	0·25	1·67
..	..	..	..	Nil	2·1	0·06	1·61	0·06	0·06	1·61
..	..	..	..	1	2·6	0·30	1·58	0·20	0·30	1·58
..	..	..	..	3	2·6	1·93	1·52	0·85	1·93	1·52
..	..	..	..	2	2·0	0·30	1·47	0·18	0·30	1·47
..	..	..	..		1·7		2·18			2·18
..	..	..	..	Nil	2·5	0·02	1·75	0·02	0·02	1·75
..	..	..	..		2·7		2·03			2·03
..	..	..	..	3	1·7	1·43	0·89	0·95	1·43	0·89
..	..	..	..	Nil	2·3	0·03	1·15	0·03	0·03	1·15
..	..	..	..	2	1·8	0·23	1·08	0·13	0·23	1·08
..	..	..	..	1	2·2	0·22	0·96	0·12	0·22	0·96
..	..	..	..	1	1·6	0·28	1·35	0·28	0·28	1·35
..	..	..	..	1	1·8	1·00	1·69	0·93	1·00	1·69
..	..	..	..		2·3		2·37			2·37
..	..	..	..	Nil	1·9	Nil	1·49	Nil	Nil	1·49
..	..	..	..	3	2·2	1·14	1·90	0·57	1·14	1·90
..	..	..	..		2·[illegible]		1·69			1·69
..	..	..	..	3	2·1	0·67	1·89	0·30	0·67	1·89
..	..	..	0·20	4	3·2	0·60	2·93	0·20	0·60	2·93
0·06	..	..	..	2	(n)	0·48	(n)	0·26	0·48	(n)
..	..	..	..	3	(n)	0·87	(n)	0·32	0·87	(n)
..	..	0·25	..	3	(n)	1·13	(n)	0·47	1·13	(n)
..	..	..	..	4	(n)	1·97	(n)	1·15	1·97	(n)
..	..	..	..	2	2·3	0·73	1·43	0·38	0·73	1·43
..	..	..	..	Nil	2·3	0·06	1·51	0·06	0·06	1·51
..	..	..	..	Nil	2·4	Nil	1·40	Nil	Nil	1·40
..	..	..	..		(n)		(n)			(n)
..	..	..	..	Nil	(n)	Nil	(n)	Nil	Nil	(n)
..	..	..	..		(n)		(n)			(n)
..	..	..	..	1	(n)	1·25	(n)	1·20	1·25	(n)
..	..	..	..	Nil	(n)	Nil	(n)	Nil	Nil	(n)
..	..	..	..	1	2·4	0·21	1·36	0·11	0·21	1·36
0·25	..	..	..	4	2·1	2·21	1·44	1·06	2·21	1·44
..	..	..	..	2	2·9	1·27	2·41	0·94	1·27	2·41
..	..	..	..	Nil	2·0	Nil	1·20	Nil	Nil	1·20
..	..	..	..	Nil	1·9	Nil	1·00	Nil	Nil	1·00
..	..	..	..	Nil	2·0	Nil	1·01	Nil	Nil	1·01
..	..	..	..	Nil	2·1	Nil	1·16	Nil	Nil	1·16
..	..	..	..	Nil	1·7	Nil	0·70	Nil	Nil	0·70
..	..	..	..	Nil	1·7	Nil	0·85	Nil	Nil	0·85
..	..	..	..	Nil	1·7	Nil	0·74	Nil	Nil	0·74
..	..	..	..	Nil	(n)	Nil	(n)	Nil	Nil	(n)
..	..	..	..	Nil	(n)	Nil	(n)	Nil	Nil	(n)
..	..	..	..	Nil	(n)	Nil	(n)	Nil	Nil	(n)

(n) Not ascertained.

DAILY RAINFALL RECORDED IN BENGAL

Division and district.	Station.	1	2	3	4	5	6	7
Rajshahi—*concld.*								
Dinajpur ..	Nithpur	..	..	..	..	..	..	..
	Nawabganj	..	..	..	..	..	..	..
	Gangarampur	..	..	..	..	..	..	..
	Itahar	..	..	..	..	..	..	..
	Raiganj	..	..	..	..	..	..	..
	Dinajpur (Obsy.)	..	..	..	..	..	..	..
	Balurghat	..	..	..	..	..	..	..
	Thakurgaon	..	..	..	..	..	..	..
	Setabganj	..	..	..	..	..	..	..
	Ramganj*							
	Atwari	..	..	..	..	..	..	..
	Birganj	..	..	..	..	..	..	..
	Parbatipur	..	..	..	..	..	..	..
	Patnitola	..	..	..	..	..	..	..
	Sapahar*							
Jalpaiguri ..	Jalpaiguri (Obsy.) ..	..	..	..	..	..	..	..
	Alipur Duars	..	..	..	..	..	..	..
	Falakata	..	..	..	..	..	..	..
	Debiganj	..	..	..	..	..	..	..
	Buxa	0·28	0·16	..	..	..	..	..
	Kalchini	..	..	0·11	..	..	..	..
	Kumargram	..	..	..	..	..	..	..
Darjeeling ..	Siliguri	..	..	..	..	..	..	..
	Darjeeling (Obsy.) ..	0·09	..	0·02	..	..	..	..
	Kalimpong (Obsy.) ..	..	..	0·05	..	..	..	..
	Mongpoo	0·05	..	0·01	..	..	..	..
	Kurseong	..	..	..	..	..	0·03	..
	Pedong	0·35	..	0·05	0·02	..	..	..
Rangpur ..	Bhawaniganj (Gaibandha) ..	..	..	..	..	..	..	..
	Rangpur (Obsy.) ..	..	..	..	..	..	..	..
	Pirganj	..	..	..	..	..	..	..
	Kurigaon	0·25	..	..	..	..	..	..
	Gobindganj	..	..	..	..	..	..	..
	Bagdogra (Nilphamari) ..	..	..	..	..	..	..	..
	Ulipur	..	..	..	..	..	..	..
	Sunderganj	..	..	..	..	..	..	..
	Saidpur	..	..	..	..	..	..	..
Bogra ..	Sherpur	..	..	..	..	..	..	..
	Nowkhilla	..	..	..	..	..	..	..
	Bogra (Obsy.)	..	..	..	..	..	..	..
	Panchbibi	..	..	..	..	..	..	..
	Khotlal	..	..	..	..	..	..	..
	Adamdighi	..	..	..	..	..	..	..
	Dubchanchia	..	..	..	..	..	..	..
Pabna ..	Shazadpur	..	..	..	..	..	..	..
	Pabna	..	..	..	..	0·03	..	..
	Sirajganj (Obsy.)	..	..	..	..	..	..	..
	Iswardi	..	..	..	..	0·45	..	..
Malda ..	Malda (Obsy.)	..	..	..	..	..	..	..
	Chanchal	..	..	..	..	..	..	..
	Gazol	..	..	..	..	..	..	..
	Sibganj	..	..	..	..	..	..	..
	Gomastapur	..	..	..	..	..	..	..
	Nawabganj	..	..	..	..	..	..	..
Dacca.								
Dacca ..	Munshiganj	..	..	..	..	..	..	..
	Dacca	..	..	..	..	..	..	..
	Nawabganj	..	..	..	..	..	..	..
	Narayanganj (Obsy.) ..	..	..	..	..	..	0·07	..
	Narsingdi	..	..	..	..	..	..	..
	Manikganj	..	..	..	..	0·15	..	..
	Joydebpur	..	..	..	..	0·04	..	..
	Kapasia	..	..	..	..	..	..	..

*Not reported.

FOR THE MONTH OF MARCH 1937.

8	9	10	11	12	13	14	15	16	17	18	19	20
..	..	..	..	..	..	..	..	..	..	..	..	..
..	..	..	..	0·25	..	..	..	..	..	..	..	..
..	..	..	..	..

DAILY RAINFALL RECORDED IN BENGAL

Division and district.	Station.	21	22	23	24	25	26	27
Rajshahi—*concld.*								
Dinajpur ..	Nithpur	..	..	..	..	..	..	..
	Nawabganj	..	..	..	..	..	..	..
	Gangarampur	..	..	..	..	..	..	..
	Itahar	..	..	..	..	..	..	..
	Raiganj	..	..	..	..	..	..	..
	Dinajpur (Obsy.)	..	..	..	..	..	..	..
	Balurghat	..	..	..	..	..	..	..
	Thakurgaon	..	..	..	..	..	..	..
	Setabganj	..	..	..	..	..	..	..
	Ramganj*							
	Atwari	..	..	..	..	..	..	..
	Birganj	..	..	..	..	..	..	..
	Parbatipur	..	..	..	..	..	..	..
	Patnitola	..	..	..	..	..	..	..
	Sapahar*							
Jalpaiguri ..	Jalpaiguri (Obsy.) ..	..	..	..	..	..	..	..
	Alipur Duars	..	..	..	..	..	..	..
	Falakata	..	..	..	..	..	..	..
	Debiganj	..	..	..	..	..	..	..
	Buxa	..	..	..	..	..	..	..
	Kalchini	..	..	..	..	..	..	..
	Kumargram	..	..	..	..	..	..	..
Darjeeling ..	Siliguri	..	..	..	..	..	..	..
	Darjeeling (Obsy.) ..	..	..	..	..	..	..	..
	Kalimpong (Obsy.) ..	..	..	..	..	..	..	..
	Mongpoo	..	..	..	..	..	..	..
	Kurseong	..	..	..	..	..	..	..
	Pedong	..	..	..	..	..	..	..
Rangpur ..	Bhawaniganj (Gaibandha) ..	..	..	..	..	..	..	..
	Rangpur (Obsy.)	..	..	..	..	..	..	..
	Pirganj	..	..	..	..	..	..	..
	Kurigaon	..	..	..	..	..	..	..
	Gobindganj	..	..	..	..	..	..	..
	Bagdogra (Nilphamari) ..	..	..	..	..	..	..	..
	Ulipur	..	..	..	..	..	..	..
	Sunderganj	..	..	..	..	..	..	..
	Saidpur	..	..	..	..	..	..	..
Bogra ..	Sherpur	..	..	..	..	..	..	..
	Nowkhilla	..	..	..	..	..	..	..
	Bogra (Obsy.)	..	..	..	..	..	..	..
	Panchbibi	..	..	..	..	..	..	..
	Khetlal	..	..	..	..	..	..	..
	Adamdighi	..	..	..	..	..	..	..
	Dubchanchia	..	..	..	..	..	..	..
Pabna ..	Shazadpur	..	..	..	..	..	..	..
	Pabna	..	..	..	0·05	..	..	..
	Sirajganj (Obsy.)	..	..	..	..	..	..	..
	Iswardi	..	..	..	..	..	..	..
Malda ..	Malda (Obsy.)	..	..	..	..	..	..	..
	Chanchal	..	..	..	..	..	..	..
	Gazol	..	..	..	..	..	..	..
	Sibganj	..	..	..	..	..	..	..
	Gomastapur	..	..	..	..	..	..	..
	Nawabganj	..	..	..	..	..	..	..
Dacca.								
Dacca ..	Munshiganj	0·21	..	..	..	..	..	..
	Dacca	..	..	..	..	..	..	..
	Nawabganj	..	..	..	..	..	..	..
	Narayanganj (Obsy.) ..	..	..	..	0·04	..	..	..
	Narsingdi	..	..	0·17	..	..	..	..
	Manikganj	..	..	..	..	..	..	..
	Joydebpur	..	..	..	..	..	..	..
	Kapasia	..	..	..	..	..	..	..

*Not reported.

FOR THE MONTH OF MARCH 1937.

28	29	30	31	Number of rainy days.	Average number of rainy days.	Total rainfall for the month.	Normal rainfall for the month.	Heaviest rainfall during the month.	Total rainfall from 1st to 31st March 1937.	Normal rainfall from 1st to 31st March 1937.
..	..	..	..	Nil	1·1	Nil	0·60	Nil	Nil	0·60
..	..	..	..	1	1·1	0·25	0·62	0·25	0·25	0·62
..	..	..	..	Nil	1·6	Nil	0·70	Nil	Nil	0·70
..	..	..	..	Nil	1·4	Nil	0·61	Nil	Nil	0·61
..	..	..	..	Nil	1·5	Nil	0·77	Nil	Nil	0·77
..	..	..	0·02	Nil	1·5	0·02	0·75	0·02	0·02	0·75
..	..	..	..	Nil	1·4	Nil	0·78	Nil	Nil	0·78
..	..	..	..	Nil	1·7	Nil	0·92	Nil	Nil	0·92
..	..	..	..	Nil	1·8	Nil	0·96	Nil	Nil	0·96
					1·5		0·77			0·77
..	..	..	0·08	Nil	2·3	0·08	1·42	0·08	0·08	1·42
..	..	..	..	Nil	1·0	Nil	0·92	Nil	Nil	0·92
..	..	..	..	Nil	2·2	Nil	0·90	Nil	Nil	0·90
..	..	..	..	Nil	(n)	Nil	(n)	Nil	Nil	(n)
					(n)		(n)			(n)
..	..	..	..	Nil	2·4	Nil	1·36	Nil	Nil	1·36
..	..	..	..	Nil	2·7	Nil	1·89	Nil	Nil	1·89
..	..	..	0·30	1	2·5	0·30	1·31	0·30	0·30	1·31
..	..	..	..	Nil	1·9	Nil	1·05	Nil	Nil	1·05
..	..	..	0·67	3	4·4	1·11	2·99	0·67	1·11	2·99
..	..	..	..	1	3·5	0·11	2·00	0·11	0·11	2·00
..	..	..	..	Nil	3·8	Nil	2·48	Nil	Nil	2·48
..	..	..	..	Nil	2·3	Nil	1·24	Nil	Nil	1·24
..	..	..	..	Nil	3·8	0·11	1·84	0·09	0·11	1·84
..	..	..	..	Nil	3·2	0·05	1·48	0·05	0·05	1·48
..	..	..	..	Nil	4·3	0·06	1·85	0·05	0·06	1·85
..	..	..	..	Nil	3·4	0·03	1·84	0·03	0·03	1·84
..	..	..	..	1	4·3	0·42	2·00	0·35	0·42	2·00
..	..	..	..	Nil	2·1	Nil	1·21	Nil	Nil	1·21
..	..	..	..	Nil	1·8	Nil	1·13	Nil	Nil	1·13
..	..	..	..	Nil	1·3	Nil	0·69	Nil	Nil	0·69
..	..	..	..	1	2·3	0·25	1·63	0·25	0·25	1·63
..	..	..	..	Nil	1·9	Nil	1·10	Nil	Nil	1·10
..	..	..	..	Nil	1·7	Nil	1·11	Nil	Nil	1·11
..	..	..	..	Nil	2·3	Nil	1·20	Nil	Nil	1·20
..	..	..	..	Nil	1·9	Nil	1·38	Nil	Nil	1·38
..	..	..	..	Nil	1·8	Nil	1·02	Nil	Nil	1·02
..	..	..	..	Nil	2·3	Nil	1·09	Nil	Nil	1·09
..	..	..	..	Nil	2·2	Nil	1·18	Nil	Nil	1·18
..	..	..	..	Nil	2·1	Nil	1·24	Nil	Nil	1·24
..	..	..	..	Nil	1·6	Nil	0·97	Nil	Nil	0·97
..	..	..	..	Nil	1·2	Nil	0·53	Nil	Nil	0·53
..	..	..	..	Nil	(n)	Nil	(n)	Nil	Nil	(n)
..	..	..	..	Nil	(n)	Nil	(n)	Nil	Nil	(n)
..	..	..	..	Nil	3·5	Nil	1·73	Nil	Nil	1·73
..	..	..	..	Nil	2·6	0·14	1·36	0·05	0·14	1·36
..	..	..	..	Nil	2·3	Nil	1·33	Nil	Nil	1·33
..	..	..	..	1	2·5	0·45	0·96	0·45	0·45	0·96
..	..	..	..	Nil	1·3	Nil	0·71	Nil	Nil	0·71
..	..	..	..	Nil	1·3	Nil	0·62	Nil	Nil	0·62
..	..	..	..	Nil	1·6	Nil	0·66	Nil	Nil	0·66
..	..	..	..	Nil	1·7	Nil	0·64	Nil	Nil	0·64
..	..	..	..	Nil	1·9	Nil	0·76	Nil	Nil	0·76
..	..	..	..	Nil	2·1	Nil	1·01	Nil	Nil	1·01
..	..	..	..	1	4·0	0·21	2·98	0·21	0·21	2·98
..	..	..	..	Nil	3·6	Nil	2·63	Nil	Nil	2·63
..	..	..	..	Nil	3·7	Nil	3·29	Nil	Nil	3·29
..	..	..	..	Nil	3·6	0·18	2·69	0·07	0·18	2·69
..	..	..	..	1	3·7	0·17	3·55	0·17	0·17	3·55
..	..	..	..	1	2·9	0·15	1·85	0·15	0·15	1·85
..	..	..	..	1	3·5	0·20	2·31	0·16	0·20	2·31
..	..	..	..	1	2·3	0·10	1·79	0·10	0·10	1·79

(n) Not ascertained.

DAILY RAINFALL RECORDED IN BENGAL

Division and district.	Station.	1	2	3	4	5	6	7
Dacca—*concld.*								
Mymensingh ..	Kishorganj	..	..	..	..	..	..	..
	Atia (Tangail)	..	..	..	..	..	..	..
	Sarisabari	..	..	..	..	..	..	..
	Mymensingh (Obsy.) ..	0·12	..	..	..	..	..	..
	Jamalpur	..	..	..	..	..	..	..
	Netrokona	..	..	..	..	..	..	..
	Pingna	..	..	..	..	..	..	..
	Durgapur	..	..	..	..	..	..	..
	Sherpur (Town)	..	..	..	..	..	..	..
	Dewanganj	..	..	..	..	..	..	..
	Nalitabari	..	..	..	..	..	..	..
Faridpur ..	Madaripur	..	..	..	..	..	..	..
	Faridpur (Obsy.)	..	..	..	..	..	..	..
	Rajbari (Goalundo) ..	..	..	..	..	0·02	..	..
	Haridaspur	..	..	..	..	..	..	..
	Takerhat	..	..	..	..	..	..	..
	Bhanga	..	..	..	..	..	..	..
	Pangsa	..	..	..	..	..	..	..
	Baliakandi	..	..	..	..	..	..	..
	Bhusna	..	..	..	..	..	..	..
	Palong	..	..	..	..	..	..	..
Bakarganj ..	Patuakhali	..	..	..	..	..	1·15	..
	Barguna*							
	Pirojpur	..	..	..	..	..	..	..
	Barisal (Obsy.)	..	..	..	..	..	..	..
	Gaurnadi	..	..	..	..	..	..	..
	Bhola	..	..	..	..	..	..	..
	Daulatkhan	..	..	..	..	..	..	..
	Bauphal	..	..	..	..	..	..	..
Chittagong.								
Chittagong ..	Cox's Bazar (Obsy.) ..	..	..	..	..	..	..	..
	Chittagong (Obsy.) ..	..	..	..	..	..	..	..
	Kutubdia	..	..	..	..	..	..	..
	Satkania	..	..	..	..	..	..	..
	Mirsarai	..	..	..	..	..	..	..
	Rangunia	..	..	..	..	..	..	..
Tippera ..	Comilla (Obsy.)	..	..	..	..	..	..	..
	Chandpur	..	..	..	..	..	..	..
	Brahmanbaria	..	..	..	..	..	..	..
	Ramchandrapur	..	..	..	..	..	..	..
	Nasirnagar*							
	Daudkandi	..	..	..	..	..	..	..
	Kasba	..	..	..	..	0·20	..	..
	Laksam	..	..	..	..	..	..	..
Noakhali ..	Noakhali (Obsy.)	..	..	..	..	..	..	..
	Feni	..	..	..	..	..	..	..
	Harishpur*							
	Ramganj	..	..	..	..	0·05	..	..
	Chhagalnaya	..	..	..	..	..	..	..
	Hatiya	..	..	..	..	..	..	..
	Lakshmipur	..	..	..	..	..	..	..
Chittagong Hill Tracts	Rangamati	..	..	..	..	..	..	..
	Bandarban	..	..	..	..	..	..	..
	Barkal	..	..	..	..	..	..	..
	Mahalchari	..	..	..	..	..	..	..
	Lama	..	..	..	..	..	..	..
	Ramgarh	..	..	..	..	..	..	..
	Manikseri	..	..	..	..	..	..	..
	Dighinala	..	..	..	..	..	..	..
	Mainmukh	..	..	..	..	..	..	..
	Kaptai*							
	Panchhari	..	..	..	..	..	..	..
	Nakhyongchhari	..	..	..	..	..	..	..
Tripura State ..	Agartala	..	..	..	..	..	..	..
Cooch Behar ..	Dinhata	..	..	..	..	..	..	..
	Cooch Behar (Obsy.) ..	..	..	..	..	..	..	..
	Mickliganj	..	..	..	..	..	..	..
	Mathabhanga	..	..	..	..	..	..	..
	Fulbaria (Tufanganj) ..	..	..	..	..	..	..	..

*Not reported.

FOR THE MONTH OF MARCH 1937.

8	9	10	11	12	13	14	15	16	17	18	19	20
..	..	..	..	..	.	..	.	0·65	..	..	0·18	.
..	..	..	..	.	..	..	..	.	..	..	..	.
..	..	..	..	..	..	..	..	.	.	..	..	..
..	..	..	..	..	.	.	..	0·04	.	..	..	..
..	..	..	..	..	..	..	..	..	..	..	..	..
..	..	..	..	..	..	..	.	..	..	0·16	..	..
.	..	..	.	..	..	..	..	..	..	..	..	..
..	..	..	..	..	..	.	..	0·20	..	..	..	..
..	..	.	..	..	..	.	..	..	..	..	.	..
..	..	..	..	..	..	..	..	..	.	..	..	..
..	..	..	.	..	..	..	..	.	..	.	..	..
..	..	..	..	.	.		..	.	..	.		
..	..	.	..	..		.	.	0·03	0·01	.	..	..
..		..	..	..	..	..	..	..	0·06	0·04	..	..
..	..	..	..	..	.		.	..	..	..	..	..
..	..	..	..	..	.	0·02	.	..	..	..	..	..
..	..	..	..	..	..	..	..	..	..	..	..	..
..	..	..	..	..	..	..	..	..	0·01	..	..	..
..	..	..	..	..	..	0·01	..	..	0·08	0·02	..	..
..	..	..	..	..	..	..	.	.	..	.	..	..
..	..	..	..	..	..	..	..	..	..	..	..	..
..	..	..	..	..	..	..	..	..	..	..	0·66	..
..	..	..	..	..	..	..	..	..	0·40	..	..	..
..	..	..	..	..	..	..	..	..	..	..	..	..
..	..	..	..	..	..	..	..	..	..	0·01	..	..
..	..	..	..	..	..	..	..	..	0·72	..	..	..
..	..	..	..	..	..	..	..	..	0·17	..	..	..
..	..	..	..	..	0·28	..	..	..	0·25	..	..	..
..	..	..	..	..	..	..	.	..	..	0·39	..	..
..	..	..	..	..	..	..	..	..	..	1·27	0·04	..
..	..	..	..	..	..	..	..	..	..	1·11	0·10	..
..	..	..	..	..	..	..	.	..	..	..	..	..
..	..	..	..	..	..	..	..	1·00	..	0·50	..	..
..	..	..	..	..	..	..	..	..	.	..	..	..
..	..	..	..	..	..	..	0·03	..	0·05	..	..	..
..	..	..	..	..	..	..	..	.	..	..	..	..
..	..	..	..	..	..	..	..	0·10	0·06	..	..	..
..	..	..	..	..	..	..	..	..	..	..	..	..
..	..	..	..	..	..	..	..	..	..	..	..	..
..	..	..	..	..	..	..	..	..	..	..	..	..
..	..	..	..	..	..	..	..	..	..	..	..	..
..	..	..	..	..	..	..	..	..	1·20	0·04	0·08	..
..	..	..	..	..	..	..	..	..	1·40	..	..	..
..	..	..	..	..	..	..	..	..	..	..	..	..
..	..	..	..	..	..	..	..	0·40	0·15	..	..	..
..	..	..	..	..	..	..	..	..	0·53	0·56	..	..
..	..	..	..	..	..	..	..	..	..	..	..	..
..	..	..	..	..	..	..	..	..	..	1·08	..	..
..	..	..	..	..	..	..	..	..	1·50	0·15	..	..
..	..	..	..	..	..	..	..	0·25	1·00	..	..	..
..	..	..	..	..	..	..	..	..	1·27	0·18	..	..
..	..	..	..	..	..	..	..	..	..	0·72	..	..
..	..	..	..	..	..	..	..	..	..	..	..	..
..	..	..	..	..	..	..	..	0·20	2·60	..	..	..
..	..	..	..	..	..	..	..	..	..	1·00	..	..
..	..	..	..	..	..	..	..	..	1·00	..	..	..
..	..	..	..	..	..	..	..	..	1·29	0·06	..	..
..	..	..	..	..	..	..	..	..	..	0·12	0·15	..
..	..	..	..	..	..	..	0·02	0·39	..	..	..	..
..	..	..	..	..	..	..	..	..	..	..	..	..
..	..	..	..	..	..	..	..	..	..	..	..	..
..	..	..	..	..	..	..	..	..	..	..	..	..
..	..	..	..	..	..	..	..	..	..	..	..	..
..	..	..	..	..	..	.	..	..	..	..	..	..

DAILY RAINFALL RECORDED IN BENGAL

Division and district.	Station.	21	22	23	24	25	26	27
Dacca—*concld.*								
Mymensingh ..	Kishorganj	..	..	..	..	..	..	..
	Atia (Tangail) ..	..	..	..	..	..	..	..
	Sarisabari	..	..	..	..	..	..	..
	Mymensingh (Obsy.) ..	..	..	..	..	..	..	..
	Jamalpur	..	..	..	..	..	..	..
	Netrokona	..	..	..	..	..	..	..
	Pingna	..	..	..	..	..	..	..
	Durgapur	..	..	..	..	..	..	..
	Sherpur (Town)	..	..	..	..	..	..	..
	Dewanganj	..	..	..	..	..	..	..
	Nalitabari	..	..	..	..	..	..	..
Faridpur ..	Madaripur	..	..	..	..	..	..	..
	Faridpur (Obsy.)	..	..	..	..	..	..	..
	Rajbari (Goalundo) ..	..	..	..	..	..	..	..
	Haridaspur	..	..	..	..	..	..	..
	Takerhat	..	..	0·09	..	..	..	..
	Bhanga	..	..	..	..	..	..	..
	Pangsa	..	..	..	..	..	..	..
	Baliakandi	..	..	..	..	..	..	..
	Bhusna	..	..	..	..	..	..	..
	Palong	..	..	..	..	..	..	..
Bakarganj ..	Patuakhali	..	..	..	..	..	..	..
	Barguna*							
	Pirojpur	..	..	..	..	..	..	..
	Barisal (Obsy.)	..	..	..	..	..	..	..
	Gaurnadi	..	..	..	..	..	..	..
	Bhola	..	..	..	..	..	..	..
	Daulatkhan	..	..	..	..	..	..	..
	Bauphal	..	..	..	..	..	..	..
Chittagong.								
Chittagong ..	Cox's Bazar (Obsy.) ..	..	..	..	..	..	..	..
	Chittagong (Obsy.) ..	..	..	..	..	..	..	..
	Kutubdia	..	..	..	..	..	..	..
	Satkania	..	0·45	..	..	..	..	..
	Mirsarai	..	..	..	..	..	..	..
	Rangunia	..	..	..	..	..	..	..
Tippera ..	Comilla (Obsy.)	0·06	..	..	..	..	..	..
	Chandpur	..	..	0·11	..	..	..	..
	Brahmanbaria	..	..	..	0·30	..	..	..
	Ramchandrapur	..	..	..	0·50	..	..	..
	Nasirnagar*							
	Daudkandi	..	..	..	..	..	..	..
	Kasba	..	..	..	..	..	..	..
	Laksam	..	..	..	..	..	..	..
Noakhali ..	Noakhali (Obsy.) ..	..	..	..	..	..	..	..
	Feni	0·62	..	..	..	..	..	..
	Harishpur*							
	Ramganj	..	..	..	..	..	..	..
	Chhagalnaya	..	..	..	..	..	..	..
	Hatiya	..	..	..	..	..	..	..
	Lakshmipur	..	..	..	..	..	..	..
Chittagong Hill Tracts	Rangamati	..	..	..	..	..	..	..
	Bandarban	..	..	..	..	..	..	..
	Barkal	..	..	..	..	..	..	..
	Mahalchari	..	..	..	..	..	..	..
	Lama	..	..	..	..	..	..	..
	Ramgarh	..	..	..	..	..	..	..
	Manikseri	..	..	..	..	..	..	..
	Dighinala	..	..	..	..	..	..	..
	Mainmukh	..	..	..	0·06	..	..	..
	Kaptai*							
	Panchhari	..	..	..	..	..	..	..
	Nakhyongchhari	..	..	..	..	..	..	..
Tripura State ..	Agartala	..	..	0·01	..	..	..	..
Cooch Behar ..	Dinhata	..	..	..	..	..	..	..
	Cooch Behar (Obsy.) ..	..	..	..	..	..	..	..
	Mickliganj	..	..	..	..	..	..	..
	Mathabhanga ..	..	..	..	..	..	..	..
	Fulbaria (Tufanganj) ..	..	..	..	..	..	..	..

*Not reported.

Dacca, the 20th April 1937.

FOR THE MONTH OF MARCH 1937.

28	29	30	31	Number of rainy days.	Average number of rainy days.	Total rainfall for the month.	Normal rainfall for the month.	Heaviest rainfall during the month.	Total rainfall from 1st to 31st March 1937.	Normal rainfall from 1st to 31st March 1937.
..	..	..	..	2	1·1	0·83	2·56	0·65	0·83	2·56
..	..	..	..	Nil	2·4	Nil	1·39	Nil	Nil	1·39
..	..	..	..	Nil	2·4	Nil	1·17	Nil	Nil	1·17
..	..	..	..	1	3·5	0·16	2·09	0·12	0·16	2·09
..	..	..	..	Nil	2·5	Nil	1·39	Nil	Nil	1·39
..	..	..	..	1	3·7	0·10	2·40	0·10	0·10	2·40
..	..	..	..	Nil	1·7	Nil	1·21	Nil	Nil	1·21
..	..	..	..	1	2·7	0·20	2·11	0·20	0·20	2·11
..	..	..	..	Nil	2·6	Nil	1·63	Nil	Nil	1·63
..	..	..	..	Nil	2·1	Nil	1·38	Nil	Nil	1·38
..	..	..	..	Nil	2·8	Nil	1·59	Nil	Nil	1·59
..	..	..	..	Nil	3·7	Nil	2·36	Nil	Nil	2·36
..	..	..	..	Nil	3·2	0·04	2·33	0·03	0·04	2·33
..	..	..	..	Nil	3·2	0·12	2·06	0·06	0·12	2·06
..	..	..	..	Nil	3·1	Nil	1·91	Nil	Nil	1·91
..	..	..	..	Nil	2·9	0·11	1·69	0·09	0·11	1·69
..	..	..	..	Nil	3·3	Nil	2·14	Nil	Nil	2·14
..	..	..	..	Nil	3·5	0·01	2·20	0·01	0·01	2·20
..	..	..	..	Nil	3·3	0·06	2·96	0·03	0·06	2·96
..	..	..	..	Nil	3·6	Nil	2·02	Nil	Nil	2·02
..	..	..	..	Nil	4·0	Nil	3·22	Nil	Nil	3·22
..	..	..	..	2	2·7	1·81	2·09	1·15	1·81	2·09
					1·5		2·05			2·05
..	..	..	..	1	3·8	0·40	1·67	0·40	0·40	1·67
..	..	..	..	Nil	3·6	Nil	2·22	Nil	Nil	2·22
..	..	..	..	Nil	3·5	0·04	2·44	0·04	0·04	2·44
..	..	..	..	1	3·4	0·72	2·11	0·72	0·72	2·11
..	..	..	..	1	2·9	0·17	2·07	0·17	0·17	2·07
..	..	..	..	2	2·6	0·53	1·68	0·28	0·53	1·68
..	..	..	..	1	1·3	0·39	1·28	0·39	0·39	1·28
..	..	..	0·01	1	2·8	1·32	2·56	1·27	1·32	2·56
..	..	..	..	2	1·7	1·21	2·05	1·11	1·21	2·05
..	..	..	..	1	1·9	0·45	1·80	0·45	0·45	1·80
..	..	..	0·30	3	3·1	1·80	2·47	1·00	1·80	2·47
..	..	..	..	Nil	(n)	Nil	(n)	Nil	Nil	(n)
..	..	..	..	Nil	3·7	0·14	2·95	0·06	0·14	2·95
..	..	..	..	1	3·7	0·11	2·88	0·11	0·11	2·88
..	..	..	..	2	4·2	0·46	3·82	0·30	0·46	3·82
..	..	..	..	1	3·0	0·50	2·66	0·50	0·50	2·66
					4·0		3·14			3·14
..	..	..	..	Nil	3·1	Nil	2·29	Nil	Nil	2·29
..	..	..	..	1	3·5	0·20	3·18	0·20	0·20	3·18
..	..	..	..	Nil	3·2	Nil	2·23	Nil	Nil	2·23
..	..	..	..	1	3·4	1·32	2·65	1·20	1·32	2·65
..	..	..	..	2	4·1	2·02	3·23	1·40	2·02	3·23
					2·0		2·18			2·18
..	..	..	..	Nil	3·5	0·05	2·87	0·05	0·05	2·87
..	..	..	0·10	3	4·0	0·65	2·91	0·40	0·65	2·91
..	..	..	..	2	2·8	1·09	2·06	0·56	1·09	2·06
..	..	..	..	Nil	3·4	Nil	2·08	Nil	Nil	2·08
..	..	..	..	1	3·4	1·08	2·83	1·08	1·08	2·83
..	..	..	..	2	2·7	1·65	2·54	1·50	1·65	2·54
..	..	..	1·60	3	2·9	2·85	2·41	1·60	2·85	2·41
..	..	..	1·00	3	3·9	2·45	2·29	1·27	2·45	2·29
..	..	..	..	1	1·0	0·72	1·01	0·72	0·72	1·01
..	..	..	..	Nil	4·0	Nil	3·15	Nil	Nil	3·15
..	..	..	0·85	3	(n)	3·65	(n)	2·60	3·65	(n)
..	..	..	..	1	(n)	1·00	(n)	1·00	1·00	(n)
..	..	..	0·23	2	(n)	1·29	(n)	1·00	1·29	(n)
					(n)		(n)			(n)
..	..	..	..	1	(n)	1·35	(n)	1·29	1·35	(n)
..	..	..	..	2	(n)	0·27	(n)	0·15	0·27	(n)
..	..	..	..	1	4·5	0·42	3·78	0·39	0·42	3·78
..	..	..	..	Nil	2·5	Nil	1·54	Nil	Nil	1·54
..	..	..	..	Nil	2·7	Nil	1·91	Nil	Nil	1·91
..	..	..	..	Nil	2·2	Nil	1·31	Nil	Nil	1·31
..	..	..	..	Nil	2·5	Nil	1·67	Nil	Nil	1·67
..	..	..	..	Nil	2·6	Nil	1·61	Nil	Nil	1·61

(n) Not ascertained.

J. C. BASU, for *Director of Agriculture, Bengal.*

DEPARTMENT OF COMMUNICATIONS AND WORKS.

Irrigation.

Irrigation operations for the official year 1936-37.

Area leased for irrigation up to end of February 1937.

Circle.	District.	Canal.	Estimated full discharge.	Average discharge in month.	Discharge utilised.	Approximate area of land irrigated during the year up to the end of the month.	Approximate area of land under irrigation up to the same date last year.	Details of areas leased: Long-term leases.	Season leases. Kharif.	Rabi.	Sugarcane.	Single watering.	Total.	Grand total.	Rainfall, 1936-37. During month.	Rainfall, 1936-37. Up to end of month.	Rainfall, 1935-36. During month.	Rainfall, 1935-36. Up to end of month.
			Cusecs	Cusecs	Cusecs	Acres.	Acres.	Acres.	Acres.	Acres.	Acres.	Acres.	Acres.	Acres.	Inches.	Inches.	Inches.	Inches.
South-Western.	Midnapore	Midnapore ..	1,411	30	..	30,590	27,667	25,981	11,620	..	..	..	11,620	37,601	5·18	63·30	0·61	44·82
		Panskura ..	522	1	..	4,792	5,195	4,930	974	..	..	..	974	5,904	6·53	69·47	0·45	25·14
	Howrah ..	Tidal Reaches, Ranges I and II ..	..	..	..	..	..	..	..	..	..	..	..	..	6·56	80·61	1·00	43·53
		Total Midnapore Canal ..	..	..	..	35,382	32,862	30,911	12,594	..	..	..	12,594	43,505	..	..	..	..
		Total of the corresponding period last year ..	..	..	..	..	..	6,384	27,797	..	..	..	27,797	34,181	..	..	..	..
	Burdwan and Hooghly.	Damodar Canal proper ..	1,600	..	..	131,583	132,278	19,265	(a) 112,877	..	..	..	112,877	132,142	4·23	75·78	0·45	34·05
		Eden Canal proper ..	400	128	128	16,588	22,756	5,720	9,581(b)	1,262	26	..	10,869	16,589	5·00	71·05	0·62	49·81
		Total Damodar Canal ..	..	..	..	148,171	155,034	24,985	122,458	1,262	26	..	123,746	148,731	..	..	..	..
		Total of the corresponding period last year ..	..	..	..	..	..	31,335	123,120	1,535	44	..	124,699	156,034	..	..	..	..
	Birbhum ..	Bakreswar Canal ..	129	..	..	5,869	6,489	..	5,556(c)	..	..	..	5,556	5,556	3·62	54·75	0·17	43·06
		Total of the corresponding period last year ..	..	..	..	..	..	..	4,746(d)	..	..	..	4,746	4,746	..	..	..	..
		GRAND TOTAL ..	..	..	..	..	194,385	55,896	140,608	1,262	26	..	141,896	197,792	..	..	..	..
		GRAND TOTAL OF THE CORRESPONDING PERIOD LAST YEAR ..	..	..	..	..	..	37,719	155,663	1,535	44	..	157,242	194,961	..	..	..	..

Canal.	Approximate area of land irrigated during the year up to the end of the month.
Salbund	1,400 acres.

(a) Area irrigated under Bengal Development Act XVI of 1935.
(b) Including 75 for hot weather and 6 for *Bhadoi*.
(c) Including 5 for unauthorised irrigation.
(d) Including 54 for unauthorised irrigation.

J. F. RUSSELL,
Personal Assistant to the

Printed and published by the Superintendent, Government Printing, Bengal Government Press, Alipore, Bengal, on the 29th April 1937.

DEPARTMENT OF COMMUNICATIONS AND WORKS.

Irrigation.

Irrigation operations for the official year 1936-37.

Area leased for irrigation up to end of February 1937.

Circle.	District.	Canal.	Estimated full discharge.	Average discharge in month.	Discharge utilised.	Approximate area of land irrigated during the year up to the end of the month.	Approximate area of land under irrigation up to the same date last year.	Details of areas leased: Long-term leases.	Season leases. Kharif.	Rabi.	Sugarcane.	Single water-lift.	Total.	Grand total.	Rainfall, 1936-37. During month.	Rainfall, 1936-37. Up to end of month.	Rainfall, 1935-36. During month.	Rainfall, 1935-36. Up to end of month.
			Cusecs	Cusecs	Cusecs	Acres.	Acres.	Acres.	Acres.	Acres.	Acres.	Acres.	Acres.	Acres.	Inches.	Inches.	Inches.	Inches.
South-Western.	Midnapore	Midnapore	1,411	30	..	30,590	27,667	25,981	11,620	..	..	..	11,620	37,601	5·18	63·30	0·61	44·82
		Panskura	522	1	..	4,792	5,195	4,930	974	..	..	..	974	5,904	6·53	69·47	0·45	25·14
	Howrah	Tidal Reaches, Ranges I and II	..	..	..	..	..	..	..	..	..	..	..	..	6·56	80·61	1·00	43·53
		Total Midnapore Canal	..	..	..	35,382	32,862	30,911	12,594	..	..	..	12,594	43,505	..	..	..	..
		Total of the corresponding period last year	..	..	..	..	..	6,384	27,797	..	..	..	27,797	34,181	..	..	..	..
	Burdwan and Hooghly.	Damodar Canal proper	1,600	..	..	131,583	132,278	19,265	(a) 112,877	..	..	..	112,877	132,142	4·23	75·78	0·45	34·05
		Eden Canal proper	400	128	128	16,588	22,756	5,720	9,581(b)	1,262	26	..	10,869	16,589	5·00	71·05	0·62	49·81
		Total Damodar Canal	..	..	..	148,171	155,034	24,985	122,458	1,262	26	..	123,746	148,731	..	..	..	..
		Total of the corresponding period last year	..	..	..	..	..	31,335	123,120	1,535	44	..	124,699	156,034	..	..	..	..
	Birbhum	Bakreswar Canal	129	..	..	5,869	6,489	..	5,556(c)	..	..	..	5,556	5,556	3·62	54·75	0·17	43·06
		Total of the corresponding period last year	..	..	..	..	..	..	4,746(d)	..	..	..	4,746	4,746	..	..	..	..
		GRAND TOTAL	..	..	..	..	194,385	55,896	140,608	1,262	26	..	141,896	197,792	..	..	..	..
		GRAND TOTAL OF THE CORRESPONDING PERIOD LAST YEAR	..	..	..	..	..	37,719	155,663	1,535	44	..	157,242	194,961	..	..	..	..

Canal.	Approximate area of land irrigated during the year up to the end of the month.
Salbund	1,409 acres.

(a) Area irrigated under Bengal Development Act XVI of 1935.
(b) Including 75 for hot weather and 6 for *Bhadoi*.
(c) Including 5 for unauthorised irrigation.
(d) Including 54 for unauthorised irrigation.

J. F. RUSSELL,

Personal Assistant to the

Printed and published by the Superintendent, Government Printing, Bengal Government Press, Alipore, Bengal, on the 29th April 1937.